A DICTIONARY OF EGYPTIAN ARABIC

مُعْجَمُ اللُّغَةِ العَرَبِيَّةِ المِصْرِيَّةِ

Mamdouh Mustafa Jarouche

A DICTIONARY OF EGYPTIAN ARABIC

ARABIC-ENGLISH

MARTIN HINDS
University of Cambridge

EL-SAID BADAWI
The American University in Cairo

Issued under the sponsorship of
The American University in Cairo

LIBRAIRIE DU LIBAN

Librairie du Liban
Riad Solh Square, Beirut.
Associated companies, branches and representatives throughout the world.

© LIBRAIRIE DU LIBAN, 1986
All rights reserved. No part of this publication may be reproduced, stored in a retrieval system or transmitted in any form or by any means, electronic, mechanical, photocopying, recording or otherwise, without the prior, written permission of the Publishers.

This work was developed under a contract with the U.S. Office of Education Department of Health, Education and Welfare, and with support from the Ford Foundation.

Printed in Lebanon by
TYPOPRESS, Beirut

مُعْجَمُ اللّغَةِ العَرَبيَّةِ المِصْرِيَّة

عَرَبي - إنْكليزي

السَّعيد بَدَوي
الجَامِعَة الأميركيَّة في القَاهِرَة

مَارتن هَايندس
جَامِعَة كَمبرِيدْج

مَكتبَة لبْنَان

CONTENTS

Acknowledgements	VII
Introduction	VIII
Arrangement of Entries	XII
The Dictionary	1-966
Illustrations	967–982

Acknowledgements

The compilers are indebted to a great many people for their advice and assistance. In the first place, the project would not have come into being at all without the support and encouragement of the late Christopher Thoron, who was President of the American University in Cairo from 1969 until his untimely death in 1974. Among other officers or former officers of the American University in Cairo who did much to facilitate work, particularly in times of difficulty, were Dr Richard Crabbs, Dr Hussein Fawzy, Dr Mohammed Allam, Dr Cecil Byrd, Dr Thomas Lamont, Mr Peter Nichols, Dr Richard Pedersen, Dr Moyer Hunsberger, Dr Marsden Jones, Mr Ahmed El-Lozy, Mr Carl Schieren and Miss Priscilla Blakemore.

The project enjoyed the support of several institutions. A major part of the funding was provided by the U.S. Office of Education, among whose officers Mrs Julia Petrov, who was our understanding and longsuffering Program Officer, and Dr Richard Thompson deserve special thanks for their help. Substantial support was also provided by the Ford Foundation, in which connection acknowledgement is due to Mr William Irelan, Dr Ronald Wolfe, Mr Courtney Nelson, Mr Samuel Bunker, Dr Björn Jernudd and Professor Richard Tucker. The moral support of the Arabic Language Academy in Cairo was indispensable, and for this we owe thanks in particular to Dr Ibrahim Madkour, formerly Secretary and now Chairman of the Academy, for his encouragement and advice (although the content of the dictionary is of course the responsibility of the compilers alone), and to Mr Ibrahim El-Tarzi.

The basic work of preparation of this dictionary took place between the years 1972-1977. Two experts whose help was indispensable during this period were Dr Raymond Bathurst, who handled the technical and computing side of the operation, and Dr Karl Stowasser, who initiated us into the elusive art of lexicography and readily shared with us the labour of drafting and redrafting some of the most complex entries. We were also fortunate enough to have the benefit of informed comments and criticisms from Professor T.F. Mitchell and Mr David Cowan. Work on the "production line" included labours of herculean proportions, particularly on the part of our principal assistants Dr Humphrey Davies and Mrs Carol Bebawi, while special mention needs to be made too of the contribution of Dr Elizabeth Sartain (notably her work in the area of etymologies), Dr Kristina Nelson, Mr Mohammed El-Saati, Mr Maged El-Kommos and Mr Jeffrey Bennett; the illustrations are the work of Mrs Elizabeth Rodenbeck. To these and to the very many others — too numerous to name — who gave of themselves unstintingly in this work, we extend our thanks.

Introduction

This dictionary is intended to satisfy a longstanding need on the part of speakers of English for a dictionary with which to comprehend Egyptian Arabic. During the past twenty-five years progress has been made in the lexicography of Arabic dialects other than Egyptian, principally as a result of efforts based at Georgetown University; and the study of literary Arabic was transformed for speakers of English by the appearance in 1961 of Hans Wehr's *A dictionary of modern written Arabic*. Such developments have highlighted the need for documentation of the dominant regional form of Arabic. For Egyptian Arabic is not only the native tongue of over forty-five million people who constitute just under one third of the Arabic-speaking world; it is also — because of Egypt's important cultural and political role as an Arab state — the most widely understood form of regional Arabic.

The language described here is essentially spoken language and, as such, it may be contrasted with formal written language. In this connection, it may first be remarked that the prevalence of the view that literary Arabic *(al-lugha al-fuṣḥā)* should replace its "corrupt" variant, the popular language *(al-lugha al-'āmmiyya)*, as the normal vehicle of spontaneous spoken communication cannot be allowed to obscure the fact that this is not the case in Egypt at present and there are no grounds for anticipating any major change in this respect. Moreover, the associated notion that only *al-fuṣḥā* can be credited with a "real" existence as a "proper" system of language (to the exclusion of the *'āmmiyya* of the uneducated) fails to explain how educated and uneducated Egyptians alike — all of whom communicate with each other in the course of their daily round by means of *'āmmiyya* of one sort or another — contrive to achieve some measure of mutual intelligibility. This dictionary is accordingly based on an alternative view of language variation in Egypt, a view which sees the *'āmmiyya* of illiterate people as no less a *system* of language than is the inherited classical *fuṣḥā* and — in the absence of any clear picture of historical evolution — envisages a synchronic language scheme in which these two systems are at extremes from one another, while between them lie three other distinguishable systems. Each of these five systems, or *levels*, contains elements which exist also in one or more of the other levels, but in varying proportions; although the *divisions* between the levels are of course blurred rather than clear-cut, each level can nonetheless be typified by its own specific combination of linguistic and allied social, educational and psychological characteristics.

This scheme[1] distinguishes two levels of *fuṣḥā* and three levels of *'āmmiyya*. The older of the two levels of *fuṣḥā*, which may be termed *fuṣḥā al-turāth*, is specifically the linguistic vehicle of the legacy of Islamic high culture and religion, while contemporary *fuṣḥā*, which may be termed *fuṣḥā al-'aṣr*, is the vehicle of modern culture and technology. In Egypt, *fuṣḥā al-turāth* varies only minimally from the classical descriptions of *fuṣḥā*, as might be expected in what is now in effect a liturgical language. *Fuṣḥā al-'aṣr*, on the other hand, as the vehicle of today's intellectual needs, exhibits features which contrast with the usual classical conventions — notably a marked preference for nominal, rather than verbal, sentences; moreover, when employed orally in Egypt, *fuṣḥā al-'aṣr* displays other departures (phonological, morphological and syntactic) from the norms of *fuṣḥā al-turāth*, and these departures for the most part occur in more pronounced forms in the various levels of *'āmmiyya*. This dictionary is not concerned with lexical items which are *restricted* to one or both of these levels of *fuṣḥā*, on the ground that they are

[1] The scheme is set out in detail in al-Sa'īd Muḥammad Badawī, *Mustawayāt al-'arabiyya al-mu'āṣira fī miṣr* (Cairo, 1973).

common to Egypt and other parts of the Arabic-writing world and are (or should be) documented elsewhere.

Three levels of *'āmmiyya* can usefully be distinguished and it is with these that this dictionary is concerned. The mother tongue of any given Egyptian child is one of only two of these, the principal distinction here being whether the family background of the child is characterized by literacy or illiteracy. By the time a child reaches school age, he will have acquired a type of mother tongue which can be broadly classified as the *'āmmiyya* either of the "enlightened" *(al-mutanawwirīn)* or of the illiterate *(al-ummiyyīn)*, the latter being predominant. If the child then goes to school, he is made to function not on his own linguistic level but on the level of *fuṣḥā al-'aṣr* (in secular schools) or of *fuṣḥā al-turāth* (within the Azhar system). It is here, in respect of the individual — rather than in the broader frame of the totality of Egyptian language variation — that the phenomenon termed diglossia can usefully be recognized and studied, for from this time the child advances (or fails to advance, as the case may be) simultaneously on two separate language levels, advance in one being linked with advance in the other. What may be regarded as a fruitful culmination of this process — in the form of mastery of the third, acquired, level of *'āmmiyya*, namely that of the highly educated *(al-muthaqqafīn)* — is restricted to a small percentage of the population. This level of *'āmmiyya* is in effect the spoken counterpart of the written *fuṣḥā al-'aṣr* and is used only in appropriate contexts of interaction between *muthaqqafīn* or would-be *muthaqqafīn;* their language in more mundane contexts is ordinarily *'āmmiyyat al-mutanawwirīn*, although some may also initially have been speakers of *'āmmiyyat al-ummiyyīn*.

A few examples of linguistic distinctions between these three broad levels of *'āmmiyya* may be useful here. *'Āmmiyyat al-muthaqqafīn*, being the *'āmmiyya* most strongly influenced by *al-fuṣḥā*, is characterized phonologically by a measure of flexibility in respect of both consonants and vowels: although the ث , the ذ and the ظ are usually rendered as *s, z* and *ẓ* respectively, they are sometimes given the phonetic values of *fuṣḥā*, and the ق frequently occurs as *q*; the *fuṣḥā* diphthongs *aw* and *ay* also occur, albeit less commonly than *oo* and *ee;* and *fuṣḥā* long vowels are sometimes preserved in unstressed positions. In the phonology of *'āmmiyyat al-mutanawwirīn*, however, the element associable with *fuṣḥā* is smaller: the ث, the ذ and the ظ are commonly rendered as *t, d* and *ḍ*, and less commonly as *s, z* and *ẓ*, while the ق only infrequently occurs as *q*; the diphthongs *aw* and *ay* normally disappear, as do *fuṣḥā* long vowels which fall outside the Egyptian system of word stress. In the phonology of *'āmmiyyat al-ummiyyīn*, the ث, the ذ and the ظ are rendered as *t, d* and *ḍ* with very few exceptions, and the ق as *q* is rare (e.g. *muqri, qur'ān*).

As far as morphology and syntax are concerned, passive forms are fairly common in *'āmmiyyat al-muthaqqafīn*, are much less common in *'āmmiyyat al-mutanawwirīn*, and are almost entirely absent in *'āmmiyyat al-ummiyyīn;* the residual occurrences of the *i'rāb* of *fuṣḥā* and of *fuṣḥā* negation systems to be found in *'āmmiyyat al-muthaqqafīn* are not to be found in the two other levels of *'āmmiyya;* the use of verbal nouns and the occurrence of verbal sentences are far more common in *'āmmiyyat al-muthaqqafīn* than in the two other levels; with these two other levels comes greater use of constructions involving *bitā'* and *fī(h)*, as well as an additional system of enumeration in contexts of ordering and itemizing; finally, *'āmmiyyat al-ummiyyīn* is characterized in particular by its partiality for formulaic expressions and clichés.

The total scheme of language variation and interaction in Egypt can be represented in diagrammatical form thus:

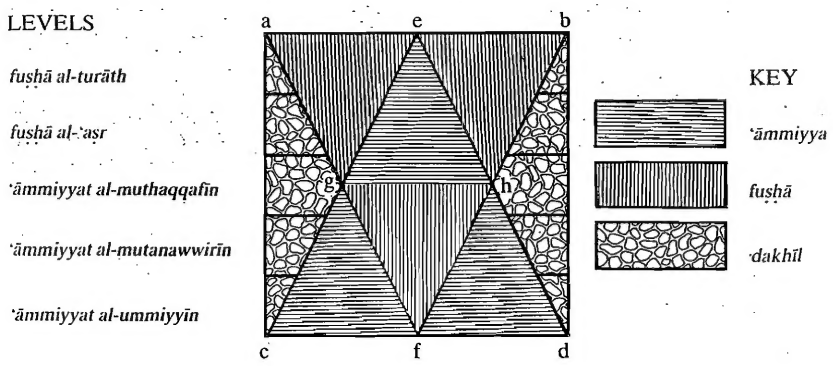

In this diagram, the line a-b represents what is theoretically the highest level of "correctness" in the literary

language, i.e. what is widely esteemed as the pure *fuṣḥā* described by classical grammarians and lexicographers. The line c-d, on the other hand, represents what is theoretically the least educated type of *'āmmiyya,* i.e. the form of language which exhibits the greatest number of linguistic differences from *fuṣḥā* and enjoys little or no esteem within the community. Lines a-f and b-f represent the erosion of features attributed to the line a-b; in other words, they represent the proportional distribution of *fuṣḥā* features within the various levels. Conversely, lines c-e and d-e represent the erosion of features attributed to the line c-d; in other words, they represent the proportional distribution of *'āmmiyya* features within the various levels. The area e-g-f-h accordingly represents the overlap of the literary and colloquial languages, while the areas a-g-e and e-h-b represent "pure" *fuṣḥā* features and the areas c-g-f and f-h-d represent "pure" *'āmmiyya* features. The areas a-g-c and b-h-d represent the proportional distribution of foreign *(dakhīl)* influence within the five levels.

In connection with foreign borrowings it should first be stressed that what may be foreign to the Arabic component of Egyptian Arabic is not necessarily foreign to Egypt. Arabic was, after all, a language at one time foreign to Egyptians, and the labelling of ancient but surviving Coptic and Greek elements as "foreign" is intended to signify their foreignness to Arabic rather than to Egypt. The identification of existing lexical items with ancient Coptic forms is, moreover, fraught with difficulty (more is said about this below) and there is often no way of knowing whether an identifiably Greek form first gained some currency in Egypt before the Arab conquest (effectively completed in 641 AD) or after it. All that can usefully be said here in this regard is that there seems to have been a fusion from the seventh century onwards of one or more kinds of Arabic with certain pre-existing elements in Egypt, together with the super-addition of further foreign borrowings. The Arabic character of the language is pervasive, to the extent perhaps of having recast in an Arabic mould some of what was absorbed from the indigenous linguistic environment, for example in the vocabulary of riparian agrarian life, which was alien to the Arab cultural heritage. Such recasting is evident in the clustering of semantically related forms around verb roots which seem unlikely to have their origin in Arabic; on the other hand, there are also instances where such verb-root evolution has not taken place, and in this respect Egyptian Arabic can be contrasted with Syrian Arabic, which is more productive of verb roots in such circumstances. In general terms, then, Egyptian Arabic can be regarded as consisting of two main lexical categories, each of which can be subdivided: 1. *Arabic:* a) items which coincide nearly or completely with counterparts existing in literary Arabic, and b) items which have recognizable counterparts in literary Arabic, while yet differing from them in some significant and specifically Egyptian fashion. 2. *Non-Arabic:* a) items apparently specific to Egypt and without Arabic counterparts, and not identifiable as relatively modern foreign borrowings, and b) items identifiable as relatively modern borrowings.

The levels which contain the smallest proportions of non-Arabic items are *fuṣḥā al-turāth* and *'āmmiyyat al-ummiyyīn,* the former because of its static and frozen character and the latter because illiteracy has the effect of insulating its speakers from the direct influence of modern culture and the outside world. In *'āmmiyyat al-ummiyyīn,* the majority of non-Arabic items are old or fairly old residents in the language (Coptic, Persian and Turkish, together with some Greek, Italian, French and English), mostly in such areas as agriculture, food, the household and administration; normally, only major and dramatic events, such as war, can account for the admission of new borrowings at that level (e.g., *nabalm*). A greater number of non-Arabic items is to be found both in *fuṣḥā al-'aṣr* and in *'āmmiyyat al-mutanawwirīn,* although of differing types. The items in *fuṣḥā al-'aṣr* for the most part belong to the vocabulary of modern culture and technology and have either achieved recognition from the Arabic Language Academy or have simply acquired currency by the legitimizing force of written usage. Non-Arabic items in *'āmmiyyat al-mutanawwirīn,* on the other hand, relate for the most part to areas such as fashion, imported cosmetics, modern household appliances etc., which are beyond the financial reach and — often — the inherited tastes of speakers of *'āmmiyyat al-ummiyyīn;* thus, while many of the non-Arabic items occurring in *'āmmiyyat al-ummiyyīn* occur also in *'āmmiyyat al-mutanawwirīn,* the converse does not hold true. Finally, it can be noted that it is *'āmmiyyat al-muthaqqafīn* that contains the greatest number of non-Arabic items: this is because it makes use of items to be found in all the other levels, because its speakers are most directly in contact with influences from outside, and because they are not as restrained in speech as they are in writing. Indeed, nearly all newly borrowed items make their entrance into Egypt by way of this level and from this point may move also into *fuṣḥā al-'aṣr* (e.g., *siryaali*) or into *'āmmiyyat al-mutanawwirīn* (e.g., *ʕil-ʕaylaynar*), although some items do not move further and may die out naturally (e.g., *ʕin-noohaaw*).

It is the purpose of this dictionary to document stable lexical items occurring in any one or more of the three levels of *'āmmiyya* defined above. Lexical items or forms restricted to *'āmmiyyat al-ummiyyīn* are marked with an arrow pointing downwards and items or forms restricted to *'āmmiyyat al-muthaqqafīn* (other than items which are self-evidently restricted to that level) are marked with an arrow pointing upwards. Although the designation "Egyptian Arabic" has been employed, the focus is on Cairo and the phonological frame is that of Cairo and the Delta, to the exclusion of Upper Egypt where the phonology is markedly different; Alexandria, too, has been denied the closer attention that it clearly deserves. Rural items given here belong to the rural scene in the vicinity of Cairo and in the Delta, although the seemingly endless range of local variants there has by no means been covered exhaustively. Other items may be assumed to be current in Cairo unless otherwise indicated.

The entries have been drafted with the primary purpose of fulfilling the needs of an English-speaking user who requires a general, overall-descriptive, synchronic, comprehension dictionary of Egyptian Arabic at all levels of society. As an overall-descriptive synchronic dictionary, it is intended to describe the language as it is now, rather than as it was, as it may be in the future, or as some would like it to be. Particular importance has been attached to the provision of numerous examples, both transparent in meaning and non-transparent. One departure from normal practice in bilingual synchronic lexicography of modern languages is, however, a modest attempt to provide some information of an etymological character; more is said about this below, but it may be stressed here that the compilers are well aware of the limitations of the present 2000-item etymological contribution. As for highly specialized terminology, and compound terms in particular, the question of what to include and what to leave out across the various subject areas has been no less problematical here than in the compilation of any overall-descriptive dictionary. Special attention has been paid to *termini technici* in traditional areas of activity, which are fairly stable in the language but for the most part less well documented than the *termini technici* of modern science and technology; but it is clear that much subject-related work is needed to a greater depth than has been possible here if a large part of the highly specialized vocabulary of traditional Egyptian handicrafts is not to pass into oblivion. The main geographical names have been included, both inside and outside Egypt; personal names have been included only in special cases, notably where idiomatic expressions are involved. For a succinct description of the grammar of Egyptian Arabic, the user is referred to T.F. Mitchell, *An introduction to Egyptian colloquial Arabic* (London, Oxford University Press, 1956, repr. 1978); mention may here be made also of T.F. Mitchell, *Colloquial Arabic: the living language of Egypt* (London, English Universities Press, 1962) and Ernest T. Abdel-Massih, *An introduction to Egyptian Arabic* (Ann Arbor, The University of Michigan, 1975).

Although there can be no doubt that this work suffers from shortcomings of a kind inevitable in a pioneering work, in this case exacerbated by a dearth of relevant linguistic studies, the status of pioneer in the field must in truth be accorded to Socrates Spiro, whose Egyptian Arabic-English dictionary first appeared in 1895 under the title *An Arabic-English vocabulary of the colloquial Arabic of Egypt containing the vernacular items and expressions, slang phrases, vocables etc. used by native Egyptians,* and in revised form in 1923 under the title *An Arabic-English dictionary of the modern Arabic of Egypt.* Spiro's work gives about 12,500 fairly detailed entries, attempts to identify borrowings from other languages, and provides some contextual illustrations, but despite its merits it is now of value only for its intrinsic historical interest and is, understandably enough, inadequate and misleading as a guide to Egyptian Arabic of the present day. Many terms given by Spiro (particularly those of Turkish origin) have since become obsolete, others have changed in sense or form, and numerous new lexical items and expressions have gained acceptance since his time, whether by borrowing from other languages or by internal derivation for purposes of new or substantially overhauled institutional, technological and ideological terminology. Accordingly, no reliance was placed on Spiro during the compilation of this dictionary, although a check at the final stage did yield some items which would otherwise have been missed.

A fundamental feature of the present work is that it has been undertaken as a dictionary of a "vacuum" type, based on field work and raw data without reference to any previous dictionary (apart from the final check of Spiro just mentioned). This is not to say that relevant published work was ignored, but attestations were not accepted merely on the authority of the printed word, and the overwhelming bulk of the data was oral and transcribed from tape-recordings. Several million words of material were edited down to a corpus of 400,000 words covering all aspects of Egyptian life, mostly in context strings, and were encoded with accompanying lexical analysis in machine-readable form so that they could be processed by computer in a way which yielded an ordered distillation of

all encoded material and analysis. The drafting was based on this distillation and resulted in the present text of over 22,500 headword entries. This figure may be compared with the 35,000 headword entries of Wehr (third edition) in a text of about the same length and with the 14,000 headword entries in a text of about half the length to be found in *A dictionary of Iraqi Arabic: Arabic-English* compiled by Woodhead and Beene (Georgetown 1967). The relatively greater length of the average headword entry in the present work can be attributed mainly to the quantity of illustrative examples included in many of the 30,000 sense divisions, among them over 6,500 idiomatic and non-transparent usages.

Arrangement of Entries

1. *Roots*

The Arabic rooting system is employed, with modifications appropriate to the arrangement of Egyptian Arabic. Roots containing verbs are normally treated as they would be in the lexicography of literary Arabic, except that roots including radicals associated with the literary ث and ذ are given in their Egyptian forms, with cross-references from the literary form of the root; thus the headword *ladʒa* appears under the root ل د ع and there is a cross-reference to that root from the literary root ل ذ ع. The rooting of items containing the glottal stop associated with Arabic ق preserves that ق, however, since the uvular rendering of ق coexists in the language with the glottal rendering, while the ث and ذ (with one exception of little importance) in effect represent phonemes which do not exist in Egyptian Arabic.

In cases where two or more Egyptian variants of a literary Arabic root exist, these are sometimes brought together and sometimes kept separate — always with cross-references — according to semantic criteria. Thus د ك ر and ز ك ر are kept apart as separate roots, both cross-referenced from ذ ك ر; on the other hand, there is every reason for keeping together all the items associated with a literary root such as ث ل ث and on such occasions the dominant Egyptian root has been used for grouping purposes, so that the root ت ل ت heads all relevant entries, both *tilt, talat* etc. and *sulus, sulaasi* etc.; there is a simple cross-reference to ت ل ت from the literary root ث ل ث, and another cross-reference from the minor sibling Egyptian root س ل س with a listing of the relevant headwords to be found under ت ل ت, viz. *sulus, sulaasi* etc.

Identical roots containing groups of lexical scatter semantically distinct from each other have been separated and numbered off. However, where two or more items with identical radicals exist as isolated forms, these have been given under a single root, such a root being within parentheses. The rooting of items which cannot readily be associated with verbs has been carried out by reference to the headword in its transcribed form, e.g., ى د د for *yadd*. Non-verbal Egyptian forms and foreign borrowings which cannot be regarded as having a place in *fuṣḥā al-turāth* take long vowels into account e.g., ع ش ا ن for *ʒafaan* and ص ل و ن for *ṣaloon;* final short vowels are sometimes regarded as long for this purpose in any position up to the fourth radical, e.g., ب ا ش ا for *baafa* and س ن م ا for *sinima*. Where it appears from lexical scatter that some assimilation can be regarded as having taken place in a headword, this has been taken into account in the selection of the radicals, e.g., the root ء ن ب و ب for the headword *ʕambuuba* /n pl *ʕanabiib/*. Where, however, an item has an exact counterpart long resident in classical Arabic, the literary root form has been accorded to it even when a verb form is lacking, e.g., the root خ رف for the headword *xaruuf*. Basically, the user who refers to literary root forms should have no difficulty in finding the right place, albeit by means of cross-references. Two final points may be mentioned here: where the root exceeds five radicals, the first four are given followed by a dash; and the ordering of roots takes gemination into account, instead of placing geminate roots at the head of a series, e.g. ش د د follows خ ش د instead of preceding it.

2. *Headwords*

All headwords are given in two forms, viz. a form in Arabic script and a phonetic representation given in italic transcription. The forms given in Arabic script are intended to serve as a guide to the common written form, subject to the limitation that Egyptian Arabic is still essentially a spoken language without firm orthographic conventions. The following points may be noted in connection with headwords:

i) *The ordering of headwords* within a root entry is according to the principle of first giving the simple verb and forms directly associated with it, followed by non-verbal forms grouped and ordered according to length, and

A DICTIONARY OF EGYPTIAN ARABIC

مُعْجَمُ اللُّغَةِ العَرَبِيَّةِ المِصْرِيَّةِ

Mamdouh Mustafa Jarouche

A DICTIONARY OF EGYPTIAN ARABIC

ARABIC-ENGLISH

MARTIN HINDS
University of Cambridge

EL-SAID BADAWI
The American University in Cairo

Issued under the sponsorship of
The American University in Cairo

LIBRAIRIE DU LIBAN

Librairie du Liban
Riad Solh Square, Beirut.
Associated companies, branches and representatives throughout the world.

© LIBRAIRIE DU LIBAN, 1986
All rights reserved. No part of this publication may be reproduced, stored in a retrieval system or transmitted in any form or by any means, electronic, mechanical, photocopying, recording or otherwise, without the prior, written permission of the Publishers.

This work was developed under a contract with the U.S. Office of Education Department of Health, Education and Welfare, and with support from the Ford Foundation.

Printed in Lebanon by
TYPOPRESS, Beirut

مُعْجَمُ اللُّغَةِ العَرَبِيَّةِ المِصْرِيَّةِ

عَرَبِي - إِنْكْلِيزِي

السَّعِيد بَدَوِي
الجَامِعَة الأَمِيرِكِيَّة فِي القَاهِرَة

مَارتن هَايندس
جَامِعَة كَمبرِيدج

مَكتَبَة لبْنَان

CONTENTS

Acknowledgements	VII
Introduction	VIII
Arrangement of Entries	XII
The Dictionary	1-966
Illustrations	967–982

Acknowledgements

The compilers are indebted to a great many people for their advice and assistance. In the first place, the project would not have come into being at all without the support and encouragement of the late Christopher Thoron, who was President of the American University in Cairo from 1969 until his untimely death in 1974. Among other officers or former officers of the American University in Cairo who did much to facilitate work, particularly in times of difficulty, were Dr Richard Crabbs, Dr Hussein Fawzy, Dr Mohammed Allam, Dr Cecil Byrd, Dr Thomas Lamont, Mr Peter Nichols, Dr Richard Pedersen, Dr Moyer Hunsberger, Dr Marsden Jones, Mr Ahmed El-Lozy, Mr Carl Schieren and Miss Priscilla Blakemore.

The project enjoyed the support of several institutions. A major part of the funding was provided by the U.S. Office of Education, among whose officers Mrs Julia Petrov, who was our understanding and longsuffering Program Officer, and Dr Richard Thompson deserve special thanks for their help. Substantial support was also provided by the Ford Foundation, in which connection acknowledgement is due to Mr William Irelan, Dr Ronald Wolfe, Mr Courtney Nelson, Mr Samuel Bunker, Dr Björn Jernudd and Professor Richard Tucker. The moral support of the Arabic Language Academy in Cairo was indispensable, and for this we owe thanks in particular to Dr Ibrahim Madkour, formerly Secretary and now Chairman of the Academy, for his encouragement and advice (although the content of the dictionary is of course the responsibility of the compilers alone), and to Mr Ibrahim El-Tarzi.

The basic work of preparation of this dictionary took place between the years 1972-1977. Two experts whose help was indispensable during this period were Dr Raymond Bathurst, who handled the technical and computing side of the operation, and Dr Karl Stowasser, who initiated us into the elusive art of lexicography and readily shared with us the labour of drafting and redrafting some of the most complex entries. We were also fortunate enough to have the benefit of informed comments and criticisms from Professor T.F. Mitchell and Mr David Cowan. Work on the "production line" included labours of herculean proportions, particularly on the part of our principal assistants Dr Humphrey Davies and Mrs Carol Bebawi, while special mention needs to be made too of the contribution of Dr Elizabeth Sartain (notably her work in the area of etymologies), Dr Kristina Nelson, Mr Mohammed El-Saati, Mr Maged El-Kommos and Mr Jeffrey Bennett; the illustrations are the work of Mrs Elizabeth Rodenbeck. To these and to the very many others — too numerous to name — who gave of themselves unstintingly in this work, we extend our thanks.

Introduction

This dictionary is intended to satisfy a longstanding need on the part of speakers of English for a dictionary with which to comprehend Egyptian Arabic. During the past twenty-five years progress has been made in the lexicography of Arabic dialects other than Egyptian, principally as a result of efforts based at Georgetown University; and the study of literary Arabic was transformed for speakers of English by the appearance in 1961 of Hans Wehr's *A dictionary of modern written Arabic.* Such developments have highlighted the need for documentation of the dominant regional form of Arabic. For Egyptian Arabic is not only the native tongue of over forty-five million people who constitute just under one third of the Arabic-speaking world; it is also — because of Egypt's important cultural and political role as an Arab state — the most widely understood form of regional Arabic.

The language described here is essentially spoken language and, as such, it may be contrasted with formal written language. In this connection, it may first be remarked that the prevalence of the view that literary Arabic *(al-lugha al-fuṣḥā)* should replace its "corrupt" variant, the popular language *(al-lugha al-ʿāmmiyya),* as the normal vehicle of spontaneous spoken communication cannot be allowed to obscure the fact that this is not the case in Egypt at present and there are no grounds for anticipating any major change in this respect. Moreover, the associated notion that only *al-fuṣḥā* can be credited with a "real" existence as a "proper" system of language (to the exclusion of the *ʿāmmiyya* of the uneducated) fails to explain how educated and uneducated Egyptians alike — all of whom communicate with each other in the course of their daily round by means of *ʿāmmiyya* of one sort or another — contrive to achieve some measure of mutual intelligibility. This dictionary is accordingly based on an alternative view of language variation in Egypt, a view which sees the *ʿāmmiyya* of illiterate people as no less a *system* of language than is the inherited classical *fuṣḥā* and — in the absence of any clear picture of historical evolution — envisages a synchronic language scheme in which these two systems are at extremes from one another, while between them lie three other distinguishable systems. Each of these five systems, or *levels,* contains elements which exist also in one or more of the other levels, but in varying proportions; although the *divisions* between the levels are of course blurred rather than clear-cut, each level can nonetheless be typified by its own specific combination of linguistic and allied social, educational and psychological characteristics.

This scheme[1] distinguishes two levels of *fuṣḥā* and three levels of *ʿāmmiyya.* The older of the two levels of *fuṣḥā,* which may be termed *fuṣḥā al-turāth,* is specifically the linguistic vehicle of the legacy of Islamic high culture and religion, while contemporary *fuṣḥā,* which may be termed *fuṣḥā al-ʿaṣr;* is the vehicle of modern culture and technology. In Egypt, *fuṣḥā al-turāth* varies only minimally from the classical descriptions of *fuṣḥā,* as might be expected in what is now in effect a liturgical language. *Fuṣḥā al-ʿaṣr,* on the other hand, as the vehicle of today's intellectual needs, exhibits features which contrast with the usual classical conventions — notably a marked preference for nominal, rather than verbal, sentences; moreover, when employed orally in Egypt, *fuṣḥā al-ʿaṣr* displays other departures (phonological, morphological and syntactic) from the norms of *fuṣḥā al-turāth,* and these departures for the most part occur in more pronounced forms in the various levels of *ʿāmmiyya.* This dictionary is not concerned with lexical items which are *restricted* to one or both of these levels of *fuṣḥā,* on the ground that they are

[1] The scheme is set out in detail in al-Saʿīd Muḥammad Badawī, *Mustawayāt al-ʿarabiyya al-muʿāṣira fī miṣr* (Cairo, 1973).

common to Egypt and other parts of the Arabic-writing world and are (or should be) documented elsewhere.

Three levels of *'āmmiyya* can usefully be distinguished and it is with these that this dictionary is concerned. The mother tongue of any given Egyptian child is one of only two of these, the principal distinction here being whether the family background of the child is characterized by literacy or illiteracy. By the time a child reaches school age, he will have acquired a type of mother tongue which can be broadly classified as the *'āmmiyya* either of the "enlightened" *(al-mutanawwirīn)* or of the illiterate *(al-ummiyyīn)*, the latter being predominant. If the child then goes to school, he is made to function not on his own linguistic level but on the level of *fuṣḥā al-'aṣr* (in secular schools) or of *fuṣḥā al-turāth* (within the Azhar system). It is here, in respect of the individual — rather than in the broader frame of the totality of Egyptian language variation — that the phenomenon termed diglossia can usefully be recognized and studied, for from this time the child advances (or fails to advance, as the case may be) simultaneously on two separate language levels, advance in one being linked with advance in the other. What may be regarded as a fruitful culmination of this process — in the form of mastery of the third, acquired, level of *'āmmiyya*, namely that of the highly educated *(al-muthaqqafīn)* — is restricted to a small percentage of the population. This level of *'āmmiyya* is in effect the spoken counterpart of the written *fuṣḥā al-'aṣr* and is used only in appropriate contexts of interaction between *muthaqqafīn* or would-be *muthaqqafīn;* their language in more mundane contexts is ordinarily *'āmmiyyat al-mutanawwirīn*, although some may also initially have been speakers of *'āmmiyyat al-ummiyyīn*.

A few examples of linguistic distinctions between these three broad levels of *'āmmiyya* may be useful here. *'Āmmiyyat al-muthaqqafīn*, being the *'āmmiyya* most strongly influenced by *al-fuṣḥā*, is characterized phonologically by a measure of flexibility in respect of both consonants and vowels: although the ث , the ذ and the ظ are usually rendered as *s*, *z* and *ẓ* respectively, they are sometimes given the phonetic values of *fuṣḥā*, and the ق frequently occurs as *q*; the *fuṣḥā* diphthongs *aw* and *ay* also occur, albeit less commonly than *oo* and *ee;* and *fuṣḥā* long vowels are sometimes preserved in unstressed positions. In the phonology of *'āmmiyyat al-mutanawwirīn*, however, the element associable with *fuṣḥā* is smaller: the ث, the ذ and the ظ are commonly rendered as *t*, *d* and *ḍ*, and less commonly as *s*, *z* and *ẓ*, while the ق only infrequently occurs as *q*; the diphthongs *aw* and *ay* normally disappear, as do *fuṣḥā* long vowels which fall outside the Egyptian system of word stress. In the phonology of *'āmmiyyat al-ummiyyīn*, the ث, the ذ and the ظ are rendered as *t*, *d* and *ḍ* with very few exceptions, and the ق as *q* is rare (e.g. *muqri*, *qur'ān*).

As far as morphology and syntax are concerned, passive forms are fairly common in *'āmmiyyat al-muthaqqafīn*, are much less common in *'āmmiyyat al-mutanawwirīn*, and are almost entirely absent in *'āmmiyyat al-ummiyyīn;* the residual occurrences of the *i'rāb* of *fuṣḥā* and of *fuṣḥā* negation systems to be found in *'āmmiyyat al-muthaqqafīn* are not to be found in the two other levels of *'āmmiyya;* the use of verbal nouns and the occurrence of verbal sentences are far more common in *'āmmiyyat al-muthaqqafīn* than in the two other levels; with these two other levels comes greater use of constructions involving *bitā'* and *fī(h)*, as well as an additional system of enumeration in contexts of ordering and itemizing; finally, *'āmmiyyat al-ummiyyīn* is characterized in particular by its partiality for formulaic expressions and clichés.

The total scheme of language variation and interaction in Egypt can be represented in diagrammatical form thus:

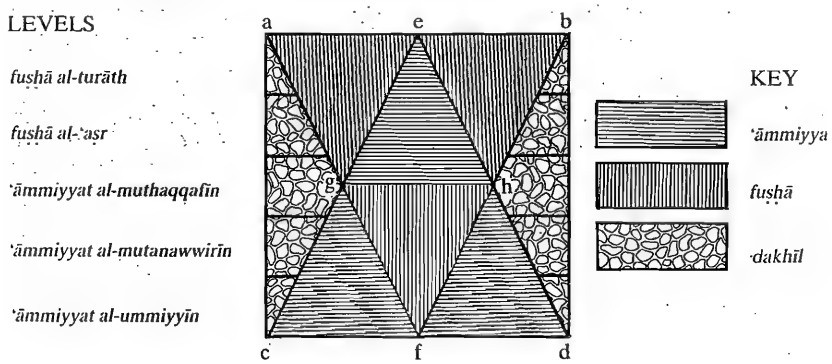

In this diagram, the line a-b represents what is theoretically the highest level of "correctness" in the literary

language, i.e. what is widely esteemed as the pure *fuṣḥā* described by classical grammarians and lexicographers. The line c-d, on the other hand, represents what is theoretically the least educated type of *'āmmiyya,* i.e. the form of language which exhibits the greatest number of linguistic differences from *fuṣḥā* and enjoys little or no esteem within the community. Lines a-f and b-f represent the erosion of features attributed to the line a-b; in other words, they represent the proportional distribution of *fuṣḥā* features within the various levels. Conversely, lines c-e and d-e represent the erosion of features attributed to the line c-d; in other words, they represent the proportional distribution of *'āmmiyya* features within the various levels. The area e-g-f-h accordingly represents the overlap of the literary and colloquial languages, while the areas a-g-e and e-h-b represent "pure" *fuṣḥā* features and the areas c-g-f and f-h-d represent "pure" *'āmmiyya* features. The areas a-g-c and b-h-d represent the proportional distribution of foreign *(dakhīl)* influence within the five levels.

In connection with foreign borrowings it should first be stressed that what may be foreign to the Arabic component of Egyptian Arabic is not necessarily foreign to Egypt. Arabic was, after all, a language at one time foreign to Egyptians, and the labelling of ancient but surviving Coptic and Greek elements as "foreign" is intended to signify their foreignness to Arabic rather than to Egypt. The identification of existing lexical items with ancient Coptic forms is, moreover, fraught with difficulty (more is said about this below) and there is often no way of knowing whether an identifiably Greek form first gained some currency in Egypt before the Arab conquest (effectively completed in 641 AD) or after it. All that can usefully be said here in this regard is that there seems to have been a fusion from the seventh century onwards of one or more kinds of Arabic with certain pre-existing elements in Egypt, together with the super-addition of further foreign borrowings. The Arabic character of the language is pervasive, to the extent perhaps of having recast in an Arabic mould some of what was absorbed from the indigenous linguistic environment, for example in the vocabulary of riparian agrarian life, which was alien to the Arab cultural heritage. Such recasting is evident in the clustering of semantically related forms around verb roots which seem unlikely to have their origin in Arabic; on the other hand, there are also instances where such verb-root evolution has not taken place, and in this respect Egyptian Arabic can be contrasted with Syrian Arabic, which is more productive of verb roots in such circumstances. In general terms, then, Egyptian Arabic can be regarded as consisting of two main lexical categories, each of which can be subdivided: 1. *Arabic:* a) items which coincide nearly or completely with counterparts existing in literary Arabic, and b) items which have recognizable counterparts in literary Arabic, while yet differing from them in some significant and specifically Egyptian fashion. 2. *Non-Arabic:* a) items apparently specific to Egypt and without Arabic counterparts, and not identifiable as relatively modern foreign borrowings, and b) items identifiable as relatively modern borrowings.

The levels which contain the smallest proportions of non-Arabic items are *fuṣḥā al-turāth* and *'āmmiyyat al-ummiyyīn,* the former because of its static and frozen character and the latter because illiteracy has the effect of insulating its speakers from the direct influence of modern culture and the outside world. In *'āmmiyyat al-ummiyyīn,* the majority of non-Arabic items are old or fairly old residents in the language (Coptic, Persian and Turkish, together with some Greek, Italian, French and English), mostly in such areas as agriculture, food, the household and administration; normally, only major and dramatic events, such as war, can account for the admission of new borrowings at that level (e.g., *nabalm*). A greater number of non-Arabic items is to be found both in *fuṣḥā al-'aṣr* and in *'āmmiyyat al-mutanawwirīn,* although of differing types. The items in *fuṣḥā al-'aṣr* for the most part belong to the vocabulary of modern culture and technology and have either achieved recognition from the Arabic Language Academy or have simply acquired currency by the legitimizing force of written usage. Non-Arabic items in *'āmmiyyat al-mutanawwirīn,* on the other hand, relate for the most part to areas such as fashion, imported cosmetics, modern household appliances etc., which are beyond the financial reach and — often — the inherited tastes of speakers of *'āmmiyyat al-ummiyyīn;* thus, while many of the non-Arabic items occurring in *'āmmiyyat al-ummiyyīn* occur also in *'āmmiyyat al-mutanawwirīn,* the converse does not hold true. Finally, it can be noted that it is *'āmmiyyat al-muthaqqafīn* that contains the greatest number of non-Arabic items: this is because it makes use of items to be found in all the other levels, because its speakers are most directly in contact with influences from outside, and because they are not as restrained in speech as they are in writing. Indeed, nearly all newly borrowed items make their entrance into Egypt by way of this level and from this point may move also into *fuṣḥā al-'aṣr* (e.g., *siryaali*) or into *'āmmiyyat al-mutanawwirīn* (e.g., *ʔil-ʃaylaynar*), although some items do not move further and may die out naturally (e.g., *ʔin-noohaaw*).

It is the purpose of this dictionary to document stable lexical items occurring in any one or more of the three levels of *'āmmiyya* defined above. Lexical items or forms restricted to *'āmmiyyat al-ummiyyīn* are marked with an arrow pointing downwards and items or forms restricted to *'āmmiyyat al-muthaqqafīn* (other than items which are self-evidently restricted to that level) are marked with an arrow pointing upwards. Although the designation "Egyptian Arabic" has been employed, the focus is on Cairo and the phonological frame is that of Cairo and the Delta, to the exclusion of Upper Egypt where the phonology is markedly different; Alexandria, too, has been denied the closer attention that it clearly deserves. Rural items given here belong to the rural scene in the vicinity of Cairo and in the Delta, although the seemingly endless range of local variants there has by no means been covered exhaustively. Other items may be assumed to be current in Cairo unless otherwise indicated.

The entries have been drafted with the primary purpose of fulfilling the needs of an English-speaking user who requires a general, overall-descriptive, synchronic, comprehension dictionary of Egyptian Arabic at all levels of society. As an overall-descriptive synchronic dictionary, it is intended to describe the language as it is now, rather than as it was, as it may be in the future, or as some would like it to be. Particular importance has been attached to the provision of numerous examples, both transparent in meaning and non-transparent. One departure from normal practice in bilingual synchronic lexicography of modern languages is, however, a modest attempt to provide some information of an etymological character; more is said about this below, but it may be stressed here that the compilers are well aware of the limitations of the present 2000-item etymological contribution. As for highly specialized terminology, and compound terms in particular, the question of what to include and what to leave out across the various subject areas has been no less problematical here than in the compilation of any overall-descriptive dictionary. Special attention has been paid to *termini technici* in traditional areas of activity, which are fairly stable in the language but for the most part less well documented than the *termini technici* of modern science and technology; but it is clear that much subject-related work is needed to a greater depth than has been possible here if a large part of the highly specialized vocabulary of traditional Egyptian handicrafts is not to pass into oblivion. The main geographical names have been included, both inside and outside Egypt; personal names have been included only in special cases, notably where idiomatic expressions are involved. For a succinct description of the grammar of Egyptian Arabic, the user is referred to T.F. Mitchell, *An introduction to Egyptian colloquial Arabic* (London, Oxford University Press, 1956, repr. 1978); mention may here be made also of T.F. Mitchell, *Colloquial Arabic: the living language of Egypt* (London, English Universities Press, 1962) and Ernest T. Abdel-Massih, *An introduction to Egyptian Arabic* (Ann Arbor, The University of Michigan, 1975).

Although there can be no doubt that this work suffers from shortcomings of a kind inevitable in a pioneering work, in this case exacerbated by a dearth of relevant linguistic studies, the status of pioneer in the field must in truth be accorded to Socrates Spiro, whose Egyptian Arabic-English dictionary first appeared in 1895 under the title *An Arabic-English vocabulary of the colloquial Arabic of Egypt containing the vernacular items and expressions, slang phrases, vocables etc. used by native Egyptians,* and in revised form in 1923 under the title *An Arabic-English dictionary of the modern Arabic of Egypt.* Spiro's work gives about 12,500 fairly detailed entries, attempts to identify borrowings from other languages, and provides some contextual illustrations, but despite its merits it is now of value only for its intrinsic historical interest and is, understandably enough, inadequate and misleading as a guide to Egyptian Arabic of the present day. Many terms given by Spiro (particularly those of Turkish origin) have since become obsolete, others have changed in sense or form, and numerous new lexical items and expressions have gained acceptance since his time, whether by borrowing from other languages or by internal derivation for purposes of new or substantially overhauled institutional, technological and ideological terminology. Accordingly, no reliance was placed on Spiro during the compilation of this dictionary, although a check at the final stage did yield some items which would otherwise have been missed.

A fundamental feature of the present work is that it has been undertaken as a dictionary of a "vacuum" type, based on field work and raw data without reference to any previous dictionary (apart from the final check of Spiro just mentioned). This is not to say that relevant published work was ignored, but attestations were not accepted merely on the authority of the printed word, and the overwhelming bulk of the data was oral and transcribed from tape-recordings. Several million words of material were edited down to a corpus of 400,000 words covering all aspects of Egyptian life, mostly in context strings, and were encoded with accompanying lexical analysis in machine-readable form so that they could be processed by computer in a way which yielded an ordered distillation of

all encoded material and analysis. The drafting was based on this distillation and resulted in the present text of over 22,500 headword entries. This figure may be compared with the 35,000 headword entries of Wehr (third edition) in a text of about the same length and with the 14,000 headword entries in a text of about half the length to be found in *A dictionary of Iraqi Arabic: Arabic-English* compiled by Woodhead and Beene (Georgetown 1967). The relatively greater length of the average headword entry in the present work can be attributed mainly to the quantity of illustrative examples included in many of the 30,000 sense divisions, among them over 6,500 idiomatic and non-transparent usages.

Arrangement of Entries

1. *Roots*

The Arabic rooting system is employed, with modifications appropriate to the arrangement of Egyptian Arabic. Roots containing verbs are normally treated as they would be in the lexicography of literary Arabic, except that roots including radicals associated with the literary ث and ذ are given in their Egyptian forms, with cross-references from the literary form of the root; thus the headword *ladɛa* appears under the root ع د ل and there is a cross-reference to that root from the literary root ع ذ ل. The rooting of items containing the glottal stop associated with Arabic ق preserves that ق, however, since the uvular rendering of ق coexists in the language with the glottal rendering, while the ث and ذ (with one exception of little importance) in effect represent phonemes which do not exist in Egyptian Arabic.

In cases where two or more Egyptian variants of a literary Arabic root exist, these are sometimes brought together and sometimes kept separate — always with cross-references — according to semantic criteria. Thus ر ك د and ر ك ز are kept apart as separate roots, both cross-referenced from ر ك ذ; on the other hand, there is every reason for keeping together all the items associated with a literary root such as ث ل ث and on such occasions the dominant Egyptian root has been used for grouping purposes, so that the root ت ل ت heads all relevant entries, both *tilt, talat* etc. and *sulus, sulaasi* etc.; there is a simple cross-reference to ت ل ت from the literary root ث ل ث, and another cross-reference from the minor sibling Egyptian root س ل س with a listing of the relevant headwords to be found under ت ل ت, viz. *sulus, sulaasi* etc.

Identical roots containing groups of lexical scatter semantically distinct from each other have been separated and numbered off. However, where two or more items with identical radicals exist as isolated forms, these have been given under a single root, such a root being within parentheses. The rooting of items which cannot readily be associated with verbs has been carried out by reference to the headword in its transcribed form, e.g., د د ي for *yadd*. Non-verbal Egyptian forms and foreign borrowings which cannot be regarded as having a place in *fuṣḥā al-turāth* take long vowels into account e.g., ن ا ش ع for *ɛafaan* and ن و ل ص for *ṣaloon;* final short vowels are sometimes regarded as long for this purpose in any position up to the fourth radical, e.g., ا ش ا ب for *baafa* and م ا ن س for *sinima*. Where it appears from lexical scatter that some assimilation can be regarded as having taken place in a headword, this has been taken into account in the selection of the radicals, e.g., the root ب ن ب و ء for the headword *ʕambuuba* /n pl *ʕanabiibi*/. Where, however, an item has an exact counterpart long resident in classical Arabic, the literary root form has been accorded to it even when a verb form is lacking, e.g., the root ف ر خ for the headword *xaruuf*. Basically, the user who refers to literary root forms should have no difficulty in finding the right place, albeit by means of cross-references. Two final points may be mentioned here: where the root exceeds five radicals, the first four are given followed by a dash; and the ordering of roots takes gemination into account, instead of placing geminate roots at the head of a series, e.g. د د ش follows د د خ ش instead of preceding it.

2. *Headwords*

All headwords are given in two forms, viz. a form in Arabic script and a phonetic representation given in italic transcription. The forms given in Arabic script are intended to serve as a guide to the common written form, subject to the limitation that Egyptian Arabic is still essentially a spoken language without firm orthographic conventions. The following points may be noted in connection with headwords:

i) *The ordering of headwords* within a root entry is according to the principle of first giving the simple verb and forms directly associated with it, followed by non-verbal forms grouped and ordered according to length, and

finally derived verbs and forms associated with them.

ii) *The symbols* used in conjunction with transcribed headwords are:
   a) ↑ : restricted to *ʿāmmiyyat al-muthaqqafīn*
   b) ↓ : restricted to *ʿāmmiyyat al-ummiyyīn*
   c) colon: current in (following phrases)
   d) small elevated numeral: one of two or more homophones.

iii) *Variant headwords of roughly equal currency* are dealt with in the following ways:
   a) Many entries that are short are repeated, e.g.:
      لارنج *laring* /coll n/ Seville oranges. — also *naring*.
      نارنج *naring* /coll n/ Seville oranges. — also *laring*.
   b) In the case of the coexistence of assimilated and unassimilated forms taken to be of roughly equal currency, these are given as follows: اتسبّت *ʔitsabbit* or *ʔissabbit* . . . The verbal information run-on (see below) of such an entry gives only unassimilated forms, but this should not be taken to mean that assimilated forms are any less common.

iv) *Variant headwords of unequal currency*
   Where phonetic variations are such that they lie within the frame of the Arabic-script headword, they are given in an order of priority which is intended to reflect notions of their relative currency, e.g., تركواز *turkuwaaz, tirkuwaaz, turukwaaz, tirikwaaz* . . . Less current variants which do not lie within the frame of the Arabic-script headword are given in parentheses in the entry of the more current form and cross-referenced from their own root, e.g., under the root ع ش ا ن, the entry reads عشان *ʿaʃaan* (also *ʿalaʃaan*) . . . and there is a cross-reference to the latter form from the root entry ع ل ش ا ن. Parentheses are also used when a headword may be used in conjunction with another word with no change of meaning, e.g., *zabaadi* (also *laban zabaadi*); in such cases no implication of relative currency is intended.

3. *Verbal information and run-on entries*

Entries dealing with verbs normally terminate with a listing of the verbal noun(s) and verbal adjectives or participles associated with that verb in Egyptian Arabic; the forms given are sometimes incongruous from the standpoint of literary Arabic. These items of verbal information do not thereafter qualify for treatment as separate entries unless they occur in set phrases requiring definition away from the verb entry or have nominal or adjectival functions in addition to their verbal functions. In a spirit of compromise, the term "inactive verbal adjective" (iva) has been employed in order to avoid the need to describe the participles of intrinsically passive derived forms of the verb as either active or passive — this being a moot point among exponents of Arabic grammar.

Idiomatic and phrasal run-on entries start on a new line preceded by ¶. Material is allocated to a run-on entry when it is in some way distinct from the main entry that it follows while yet being too closely linked with it in form to merit an independent entry. The most common examples of such material are verb-plus-preposition as a lexical unit, conjunctional phrases formed from preposition-plus-*ma*, and adverbial forms such as *ʿaadatan* and *ʿumuuman*.

4. *Etymologies*

With regard to material of an etymological character in this dictionary, more could have been done if a very great deal more time had been available for the task. In practice, however, the priorities of the documentation of Egyptian Arabic dictated adherence to modest goals in this complex area, by concentrating in the first place on pulling together the fairly exiguous relevant work available and then by adding such further points as became apparent. Entanglement in the toils of Semitic philology has not seemed appropriate, so that loanwords which have for long been resident in Arabic generally have only rarely been accorded etymons in Hebrew, Syriac etc. The focus has been rather on items borrowed specifically by Egypt and on loanwords more general in the various regional forms of Arabic but of recent arrival, and the main languages involved are therefore Coptic, Greek, Turkish, Italian, French and English. Two general works consulted in this connection were Rufāʾīl Nakhla al-Yasūʿī, *Gharāʾib al-lahja al-miṣriyya* (Beirut, 1964) and Aḥmad ʿĪsā, *al-Muḥkam fī uṣūl al-kalimāt al-ʿāmmiyya* (Cairo, 1938).[1]

[1]The reader is also referred to Erich Prokosch, *Osmanisches Wortgut im Ägyptisch-Arabischen* (Berlin, 1983), which appeared too late to be taken into account in this dictionary.

The task of dealing with survivals from Coptic is accompanied by particular complications, not only because of the antiquity of that language and the shortage of published studies on its relation with Egyptian Arabic but also because Coptic terms varied in the different Coptic dialects and there are in any case difficulties in knowing how they were pronounced. For these reasons, and because too some of the likely etymons are recorded only in hieroglyphs, Coptic/Egyptian etymons have not been given. The identification ‹Copt›, it should be noted, includes those items attested only in hieroglyphs. In addition to Nakhla's book mentioned above, the following works have been consulted in this connection: Wilson B. Bishai, "The Coptic influence on Egyptian Arabic" (Johns Hopkins University Ph.D. dissertation, Baltimore, 1959); ibid. "Coptic lexical influence on Egyptian Arabic", *Journal of Near Eastern Studies* 23 (1964), pp.39-47; W.E. Crum, *A Coptic dictionary* (Oxford, 1939); George Sobhy, *Common words in the spoken Arabic of Egypt, of Greek and Coptic origin* (Cairo, 1950); and Wilyam Naẓīr, *al-ʿĀdāt al-miṣriyya bayna 'l-ams wa-'l-yawm* (Cairo, 1967).

As might be expected, there has in some cases been considerable difficulty in deciding whether a loanword was borrowed directly from its putative language of origin or came via another language. This is particularly so with items of Persian origin, some of which seem likely to have come via Turkish, others via Arabic and yet others directly. The same problem arises with a number of Greek and Italian terms, which may have arrived either directly or via Turkish. In general, an etymon is given in its form in the language of origin, unless some change in the pronunciation or meaning suggests a route via Turkish; in this latter case, the Turkish etymon is given, accompanied by a note "from P", "from It" etc. to indicate that the item is not Turkish by origin. In the case of items that can be traced to terms common to two or more European languages, attempts have been made on the basis of pronunciation and any other available clues to specify the probable source language. Items of general European origin have been left without etymological information.

Etymological information is given between angle brackets and the following abbreviations are used: Copt(ic), Engl(ish), Fr(ench), Gr(eek), Heb(rew), It(alian), P(ersian), Sp(anish), Syr(iac), T(urkish). In cases of decided uncertainty, information is given with the qualifications "perh", "poss", or "prob". For reasons already indicated, Coptic, Syriac and Hebrew etymons are omitted, and this has also been done where the etymon is identical or almost identical with the definition. On rare occasions, the original sense of the etymon has been given when this has been thought to shed light on the entry.

For Turkish, the following works have been consulted: *New Redhouse Turkish-English dictionary* (Istanbul, 1968); J.W. Redhouse, *A Turkish and English lexicon* (new impression, Constantinople, 1921); H. Kahane *et al.*, *The lingua franca in the Levant: Turkish nautical terms of Italian and Greek origin* (Urbana, 1958); and Julius Zenker, *Türkisch-arabisch-persisches Handwörterbuch* (Leipzig, 1866). *New Redhouse* spellings have been followed except in the case of the Constantinople *h* for *kh*, where *ḫ* has been used to indicate the guttural which must have existed in the forms taken over by Egyptians. For Persian, reference has been made to Zenker and to F. Steingass, *A comprehensive Persian-English dictionary* (London, 1892), and Steingass' system of transliteration has been followed with the exception of rendering as *m* his *ṃ* which represents the Persian *n* when pronounced as *m* before *b*. For Greek, use has been made of Liddell and Scott and of Charis Patsis, *Lexico ellêno-angliko* (Athens, 1967); the *Random House dictionary* system of transliteration of Greek has been followed except for *eta, xi, upsilon, chi* and *omega,* which have been rendered as *ê, ks, u, kh* and *ô* respectively. For Italian, the Reynolds' and Cassell's dictionaries have been used; for Spanish, Cassell's; and for French, Harrap's.

5. *Grammatical information*

Grammatical information, in the form of part-of-speech labels and certain other indications of grammatical properties, is given between obliques. The following abbreviations are used:

absol	absolute	imper	imperative imperatival	pl n	plural form noun
adj	adjective, adjectival	imperf	imperfect	prep	preposition, prepositional
art	article	indef	indefinite	pron	pronoun,

adv	adverb, adverbial	inst n	instance noun		pronominal
		interrog	interrogative	prop	proper
ava	active verbal adjective	interj	interjection	pva	passive verbal adjective
coll	collective	invar	invariable	rel	relative
conj	conjunction, conjunctional	iva	inactive verbal adjective	sing	singular
constr	construct	masc	masculine	suff	suffix
correl	correlative	n	noun	unit n	unit noun
def	definite	neg	negative, negation	usu	usually
demonst	demonstrative	num	numeral	v	verb
el	elative	part	particle	vi	intransitive verb
emph	emphatic	perf	perfect	vn	verbal noun
esp	especially	pers	person, personal	vt	transitive verb
fem	feminine	pl	plural	w	with
foll	following				

The following points may be noticed:
i) Singular nouns ending in *a* or *a* in the transcription and in ة in the Arabic script are to be treated as feminine unless the definition specifically indicates otherwise (e.g., *xaliifa*). Other feminine nouns are labelled as such.
ii) Where no plural is given, none is thought to exist. An asterisk in the grammatical information indicates the plural ending *-iin* (*-yyiin* if the singular ends with *i*). Efforts have been made to rank plurals in order of frequency of occurrence; where different forms seem to be equally common, the ⋆/*-aat* or *-aatl-yya* forms have been given first.
iii) Verbs which retain the same sense whether or not there is a following preposition have been labelled /vt and vi/.
iv) The bold dash is used within the body of an entry to introduce grammatical information applicable to what follows.

6. *Special language indicators*

Special language indicators, which are given in brackets, are used to point out restrictions peculiar to specific terms. Such restrictions may relate to subject areas and occupations, a particular connotation, a social group, or a limitation on currency. The following indicators are used:

abus(ive)	*derog*(atory)	*mus*(ic)
acad(eme)	*dipl*(omacy)	*naut*(ical)
admin(istration)	*educ*(ation)	*nav*(al)
agric(ulture)	*elec*(tricity)	*non-Cairene*
anat(omy)	*eng*(ineering)	*needlew*(ork)
arch(itecture)	*euphem*(istic)	*obsol*(ete, obsolescent)
art	*fig*(urative)	*path*(ology)
astrol(ogy)	*finan*(ce)	*phot*(ography)
astron(omy)	*frozen contexts*	*phys*(ics)
athl(etics)	*geog*(raphy)	*plumb*(ing)
auto(mobiles)	*geol*(ogy)	*poet*(ical)
bank(ing)	*geom*(etry)	*pol*(itics, political)

beggars
biol(ogy)
bot(any)
broadc(asting)
butcher(ing)
callig(raphy)
carp(entry)
chem(istry)
chess
children
Chr(istian, Christianity)
cin(ema)
coarse
comm(erce)
communic(ations)
constr(uction)
cook(ery)
Copt(ic)
dent(istry)
deris(ive)
gram(mar)
gym(nastics)
hist(ory, historical)
hort(iculture)
iron(ic)
Isl(am, Islamic)
Isl(amic) *law*
joc(ular)
journ(alism)
Jud(aism)
leg(al practice)
ling(uistics)
lit(erature)
magic
math(ematics)
mech(anics)
med(ical practice)
metal(lurgy)
mil(itary affairs)
min(eralogy)
police
pottery
print(ing)
prov(erb, proverbial)
psych(ology)
rur(al)
sarc(astic)
slang
soccer
sport
surg(ery)
trad(itional) *soc*(iety)
techn(ology)
text(iles)
theat(re)
theol(ogy)
vendor's cry
vet(erinary science)
women
zool(ogy)

7. *Definitions and examples*

Definitions are given in British English, but the *Random House dictionary* has been referred to consistently in an attempt to avoid anglicisms unintelligible or misleading to those familiar only with American English. Most of the definitions are translational, with some additional "ostensive" definitions provided by the illustrations. However, analytical definitions have recommended themselves as less cumbersome for many instance nouns and for intrinsically passive derived forms of verbs themselves intransitive; in addition, analytical definition has been preferred in respect of most function words, on the ground that their complexities of usage can be summed up more readily in this way than through translational renderings which would fairly consistently fail to cover the semantic ranges involved. Senses and sub-senses are numbered off. Wherever possible, verbs have been defined in isolation from prepositions with which they may normally occur and the examples then show prepositional usages.

Illustrative contextual examples are provided for all entries except those where the meaning is so restricted or specialized that such examples would merely smack of tedious pedantry. Such emphasis on examples is, of course, consistent with the usual lexicographical practice of citation and has the advantage of capturing some of the flavour of Egyptian life. As might be expected in formulaic areas of expression such as blessing, cursing, greeting and invitation, the gap between Egyptian Arabic and English is at its greatest, with resultant difficulties in finding renderings which convey adequately all the spontaneity and conviction of the original. The collection of idiomatic usages in general has been a priority and these are to be found listed among non-transparent items given after double bars in the entries.

8. *Transcription*

The system of phonetic transcription used here follows in most respects that adopted by T.F. Mitchell in *An introduction to Egyptian colloquial Arabic* (London, 1956, repr. 1978). The main departures from that system concern certain vocalic renderings: a distinction is made here between a front *a* and a back *ɑ*, and anaptyxis is shown wherever it occurs (rather than simply within composite morphological forms). Stress is not marked except where it constitutes an exception according to the rules elaborated by Mitchell; nor is stress shown in quasi-literary patterns such as *gaamiʕi*. Thirty consonant symbols and six vowel symbols are used, the consonant symbols being listed here with their Arabic-script counterparts in the order of the Arabic alphabet, according to which the dictionary is arranged (subject to the modifications mentioned above in section 1).

i) *Consonants*

ʔ	ء	z	ز (also ذ)	f/v	ف
b	ب	s	س (also ث)	q/ɋ	ق
t	ت (also ث)	ʃ	ش	k	ك
θ	ث	ṣ	ص	l	ل
g/j	ج	ḍ	ض (also ظ)	m	م
ḥ	ح	ṭ	ط	n	ن
x	خ	ẓ	ظ (also ض)	h	ه
d	د (also ذ)	ɛ	ع	w	و
r	ر	ɣ	غ	y	ى

ii) *Vowels*

The six vowel symbols used are:

a (fatḥa muraqqaqa) low/open and front
a (fatḥa mufakhkhama) low/open and back
i (kasra khāliṣa) high/close and front
e (kasra mumāla) middle/half-close and front
u (ḍamma khāliṣa) high/close and back
o (ḍamma mumāla) middle/half-close and back

These vowel symbols are doubled to indicate length, the Arabic-script counterparts of the pairs *aa/aa, ii/ee* and *uu/oo* being ا, ى and و respectively.

Mastery of the exact phonetic value of each of the above symbols can of course be best achieved by practice with native speakers, but for descriptions of these values the user is referred to any of the grammars already mentioned. The following points, however, require special mention here:

i) *ɋ/q and ʔ*

The ق of literary Arabic is associated with two distinct sounds in Egyptian Arabic. The first of these (symbolized by *ɋ*) is of more widespread occurrence and is similar to the glottal stop (ʔ). The second (symbolized by *q*) is similar to its counterpart in literary pronunciation and occurs commonly only in *'āmmiyyat al-muthaqqafīn.* One good reason for distinguishing between ʔ and *ɋ* is that the former may elide while the latter never elides. Compare, for example, *ɤilit fi-sm-i* (or *fi-ʔism-i*) (he made a mistake in my name) with *ɤilit fi-ɋism-i* (he made a mistake in my share).

ii) *Doubled consonants*

Doubling of a consonant symbol in the transcription corresponds to the *shadda* of Arabic orthography. A doubled consonant is pronounced with twice the length of its single counterpart.

iii) *a-a/aa-aa*

The distinction made here is between the open vowel *a* made with the front of the tongue (rather like the English *a* in *hat*) and the open vowel *a* made with the back of the tongue (rather like the English vowel in the word *calm*) — cf. Egyptian Arabic *barr* (to pamper) with *barr* (to fulfil (a promise)). The long vowels *aa* and *aa* may be regarded as having double the duration of *a* and *a* respectively, e.g., *nabat* (to sprout) and *nabaat* (plant), *ṭab* (all right then!) and *ṭaab* (to recover).

iv) *i-e/ii-ee*

These two vowels are produced with the front of the tongue. The closer of them, *i,* is similar to the vowel in the English *pin* (e.g., *silim*), while for *e* the mouth is slightly more open and the vowel is roughly halfway between the vowels in English *pin* and *pen;* the vowel *e* occurs usually as a contraction of *ee* in a closed syllable (e.g., *get-na*). The long vowels *ii* and *ee* may be regarded as having double the duration of *i* and *e* respectively, e.g., *ɛeef* (bread) and *ɛef-na* (our bread), *ɛiifa* (livelihood) and *ɛiʃa* (evening prayer).

v) *u-o/uu-oo*

These two vowels are produced with the back of the tongue and the relation between them is analogous to the relation between *i* and *e*. The closer vowel, *u,* is similar to the vowel in English *put,* while for *o* the mouth is slightly

more open; the vowel *o* occurs usually as a contracted form of *oo* in a closed syllable (e.g., *yom-na*). The long vowels *uu* and *oo* may be regarded as having double the duration of *u* and *o* respectively, e.g., *door* (round (in a game etc.)) and *dor-na* (our round), *duur* (go around!) and *durr* (pearls).

vi) *Anaptyxis*

Unstressed anaptyctic vowels are represented in small elevated form, while stressed anaptyctic vowels are given in the normal fount.

9. *Hyphenation*

The system of hyphenation employed in the transcribed Arabic is intended to serve as an aid and does not constitute an attempt to lay down orthographic rules. Its purpose is to indicate the main features of the morphological structure of composite forms and it is accordingly used with bound morphemes and monosyllabic particles, and in instances of elision, anaptyxis and linkage involving stress. Certain exceptions have been made, however, in order to prevent the amount of hyphenation from becoming excessive.

i) *Bound morphemes:* e.g., *darab-ni, walad-i. Exceptions* are: a) person markers used in the conjugation of the verb (e.g., *katabt* rather than *katab-t, yiktib* rather than *yi-ktib*), and b) suffixed pronominal morphemes when bound with prepositions or conjunctions (e.g., *bikum, ʿaleek, ʔinnik, ʔikminnu*). It may be noted that the third person singular masculine suffix after a vowel takes the form of incremental length with concomitant stress (e.g., *ʃafuu* they saw him, *maʿaa* with him).

ii) *Prefixed and suffixed monosyllabic particles:* the definite article (*ʔil-beet*), the time markers *ḥa-* and *bi-* (*ḥa-yiktib*), the conjunctions *wi-* and *fa-* (*wi-ḍarab-ni*), the negative particles *ma-* and *-ʃ* (*ma-katab-ʃ*), and the prepositions *li-, bi-, ʿa-* and *mi-* (*li-beet-u*). *Exceptions:* hyphenation is not used when a monosyllabic particle is followed by a definite article or by a pronominal suffix (hence *fil-beet* rather than *fi-l-beet,* and *bikum* etc. as above); nor is hyphenation used before the conjunctive quasi-suffix (as in *saaʿit ma, baʿdˁ ma*), both because other form-classes may here be interpolated and because linkage here would imply erroneous stress.

iii) *Elision, anaptyxis and linkage involving stress:* an example of hyphenation in elision involving stress occurs in the initial composite form of the phrase *huwwa-na lli ʿamalt-u*; where an anaptyctic vowel is stressed, it is preceded by a hyphen and followed by a hyphen, but hyphenation is not used to isolate unstressed anaptyctic vowels; the term linkage here relates to the enclitic use, affecting stress, of such potential free-form units as *lak* and *di,* as in *ʔil-lelaa-di* (cf. *ʔil-leela di*) and *katabu-ha-lna* (cf. *katabuu-ha lina*).

ء

ءا see ءاه: ʔaa

ءاب
آب ʔaab /n/ *[Chr]* Father (epithet of God). *bi-sm il-ʔaab* in the name of the Father.

ءابا
آبا ʔaaba <ϱerh Copt> /n; always used vocatively/ *[trad soc]* father. *ʔinta waḫaft-i-ni y-aaba* I missed you, Daddy. *ʔaaba l-ʔakl[i] ʔaḥu* here's the food, Pop.

ءاد
آد ʔaad, ʔaad <poss related to Copt> /n; always used vocatively/ boy. *xud y-aad* come here, boy. - also *waad*.

ءادم
آدم ʔaadam /prop n/ Adam.
¶ *bani ʔaadam* /fem *bani ʔadma*, pl *bani ʔadmiin*/ **1** /n/ person, human being. *laazim il-bani ʔaadam yikuun ɛandu ṣabr* one must be patient. *ya bani ʔaadam [derog]* ≈ you brute, thickhead! **2** /adj/ considerate, polished, refined. *di sitt[i] bani ʔadma* or *sitt[i] bani ʔaadam* this is a very nice lady.
آدمى ʔaadami /adj */ human. *ʔiṭ-ṭabiiɛa l-ʔaadamiyya* human nature.
آدميّة ʔaadamiyya /n/ humanity, human feeling.

ءادى
آدى ʔaadi <Copt> /w pron suff ʔadii-/ demonstrative drawing attention to a following pronoun or noun (cf Fr *voici, voilà*). *ʔadii-ni geet* here I am! *ʔaadi gneeh* here's a pound. *ʔaadi nuṣṣ[i] saaɛa tanya faatit* there's another half hour gone! *wi-ʔaadi ʔaxrit-ha* and now look how it's turned out. *ʔaadi furt-ak il-mihabbiba* so much for your lousy advice, this is where your lousy advice has got me!

ءاس[1]
آس ʔaas[1] /coll n/ myrtle.
آسة ʔaasa /unit n, pl -aat/ a myrtle bush.

ءاس[2]
آس ʔaas[2] <Fr *as*> /n pl -aat/ ace (in cards).

ءافة
آفة ʔaafa /n pl -aat/ blight, disease (on a plant). - /adjectivally/ *raagil ʔaafa* a pest of a man. ‖*ṣaḫn[i] kunaafa w-gambii ʔaafa [prov]* description of anything fine which is marred by an accompanying fault or blemish.

ءال[1]
آلة ʔaala /n pl -aat/ **1** tool, instrument. *ʔil-ʔalaat id-daqiiqa* precision tools. *ʔitqatal bi-ʔaala ḥadda* he was murdered with a sharp instrument. **2** machine. *ɛaṣr il-ʔaala* the machine age. ‖ *ʔaala katba* typewriter. **3** musical instrument. *ʔalaat niḫasiyya* brass instruments. *ʔalaat il-qarɛ* percussion instruments. *ʔalaat in-nafx il-xafabiyya* woodwinds. **4** *[euphem]* penis. **5** stopgap. *ʔana gayb-u mɛaaya ʔaala kida wis-salaam* I've brought him with me just for the sake of appearances.
آلى ʔaali /adj/ **1** mechanical. *ʔinsaan ʔaali* robot. *gamɛ[i] ʔaali [print]* machine setting. **2** automatic. *nuṣṣ[i] ʔaali* semi-automatic. **3** *[mus]* instrumental.
آلاتى ʔalaati **1** /n pl -yya/ low-class musician or singer. **2** /adj */ raffish.

ءال[2]
آل ʔaal[1] /n always in constr/ lineage, line, stock. *ʔaal in-nabi* (or *ʔaal il-beet*) the line of the Prophet. ‖ *ʔaal faddaad* hashish-smokers.

ءال ³
آل ʔaal² <Copt> /n/ **1** jacks, five-stones (children's game). **2** /pl ʔilaan/ a single jack-stone, five-stone.

ءامين see عمن: ʔaamiin, ʔamiin

ءان see عون: ʔaan

ءانى
آنى ʔaani *[non-Cairene]* **personal pronoun** of the 1st person singular. ‖ *ʔaah y-aani* ≈ **oh me, misery me!**

ءاه
آه ʔaah (also ʔaa) <Copt> /interj/ **1** yes, yes indeed, ah yes. *ʔaah ya beeh da-lli kaan bi-yiḥṣal* that's right, Sir, that's what used to happen. *ʔis-sittaat ġiwwa ʔaah ġiwwa* women are an effective force, yes indeed, an effective force. *ʔaah fihimt* ah yes, now I understand. **2** exclamation of pain, distress or regret. *ʔaah ya gamb-i* ouch, my side! ‖ *ʔaah minnak* ≈ you snake in the grass! See further under ²عوه

ءاهو
آهو ʔaahu exclamation implying indifference. *ġagbaa-k il-waẓiifa g-gidiida* - *ʔaahu* 'Do you like the new position?' 'So-so.

(ءاى)
آية ʔaaya /n pl -aat/ **1** *[Isl]* miracle performed by God. ‖ *raagil ʔaaya (min il-ʔayaat* or *min ʔayaat rabb-i-na)* a marvellous man. - *(hiyya) ʔaaya fig-gamaal* (she is) the epitome of beauty. **2** verse of scripture. ‖ *ġakas il-ʔaaya* to do something in a way opposite to that usually followed, reverse normal procedure.
آى ʔaay /interj/ exclamation of pain. - also ʔayy.

ءاىس
آيس ʔaayis (also *ʔaayis kiriim*) <Engl> /n/ ice, ice cream.

ءءاه
آآآه ʔaʔʔaah *[children]* **1** /n/ a spanking, a smacking. *baaba ʔiddaa-ni ʔaʔʔaah* Papa gave me a spanking. **2** (also ʔaʔʔah) exclamation discouraging a child from doing wrong ≈ you'll get a spanking!

ءءه see ءءاه: ʔaʔʔah

ءءع
إئع ʔiʔaġ *[children]* interjection expressing desire to visit the lavatory.

ءباظ
أباظى ʔabaaẓi: ġads' ʔabaaẓi lentils baked with chicken (a dish attributed to the Abaza family).

ءبان ا see also ءبب
أبانا ʔabaana (also ʔabaana llaẓi) /n/ *[Chr]* Our Father, paternoster.

ءبب ¹ see also ءبان ا
أبّ ʔabb /n, in constr ʔabu, w pron suff ʔabuu- (1st sing ʔabuu-ya)/ **1** /pl ʔabbahaat, ʔabaaʔ↑/ father, progenitor. *ʔabu l-walad* the boy's father. *waḥiid ʔabuu* an only son. ‖ *ʔilli yiġraf ʔabuu-ya yqul-lu* (who knows my father may tell him) I'll do as I like and damn what anyone says! - *maglis il-ʔabaaʔ* the Parent-Teacher Association. - *ʔabuu-k ma-hu ʔabuu-k wa-ʔaxuu-k ma-hu ʔaxuu-k* (your father is not your father and your brother is not your brother) ≈ everyone for himself. **2** /pl ʔabaaʔ only/ **2a** priest, father. *ʔabaaʔ ik-kiniisa* (1) the clergy. (2) the Church Fathers. *naadi ʔabb' mil-kahana* call one of the priests. ‖ *ʔabb iġtiraaf* the priest to whom one regularly makes confession. - *ʔil-ʔabaaʔ il-biiḍ* the White Fathers, the Carmelites. **2b** /with 1st person pl suff/ *[Chr]* title of, and form of address or reference to, a priest or monk. *ʔabuu-na girgis* Father Girgis. *miin ʔabuu-na lli guwwa da* who is that priest who is inside? **3** *ʔabuu-ya* informal mode of address to (1) an older man ≈ Dad. (2) any man ≈ mate, pal. — /always in constr *ʔabu*/ **4** stem, source, origin. *burtuqaan mistiwi ġala ʔabuu* oranges which ripened on the tree. *gibt il-xabar min ʔabuu* I got it from the horse's mouth. *ʔil-ʔusṭuwaana di ʔabuu-ha feen* where is the master copy of this record? ‖ *wi-ʔabuu* to an extreme degree, par excellence, as in *dawʃa w-ʔabuu-ha* one hell of a racket. **5** /w masc n as referent, and w foll n (pl *ʔummaat, ʔummaat* q.v. under *ʔumm* 3)/ **5a** the one with .... the one having .... *ʔil-walad ʔabu naḍḍaara* the boy wearing glasses. *ʔir-raagil ʔabu ġneen zurq* the man with the blue eyes. *ʔik-kursi ʔabu talat rigleen* the three-legged chair. **5b** the one costing .... *huwwa da d-dulaab ʔabu miit gineeh* is that the hundred-pound wardrobe?
¶ *ʔabu* /in constr/ (1) used with the name of a man's eldest son, or, if he has no sons, his eldest daughter, or, if he has no children, his father, as a respectful and slightly affectionate substitute for his own name. (2) used in some nicknames corresponding to certain given names, e.g., *ʔabu ḥaggaag* for *yuusif, ʔabu ḥanafi* for *maḥmuud, ʔabu xaliil* for *ʔibrahiim, ʔabu darwiif* or

darf for *muṣṭafa*, *ʕabu dawuud* for *silimaan*, *ʕabu ɛali* for *ḥasan*.

أبّا *ʕabban: ʕabban ɛan gidd* from generation to generation, from father to son.

أبوين *ʕabaween* /dual n/ (one's) parents. *waḥiid il-ʕabaween* an only child.

أبوى *ʕabawi* /adj */ paternal, fatherly.

أبوّة *ʕubuwwa* /n/ fatherhood.

ء ب ب [2]

أبّه، أبّا *ʕubba, ʕabbah [children]* interjection accompanying actions of climbing and lifting ≈ hup! *ʕeela ʕubba* see *ʕeela*. - also *hubba*.

أبّ *ʕubb: ʕeela ʕubb* see *ʕeela*.

ء ب ب ه

أبّهة *ʕubbaha* /n/ sumptuousness, elegance (of appearance). *dool gamaaɛa ʕaaxir ʕubbaha* those are extremely chic people. -/adjectivally/ *waad ʕubbaha* an elegant youth. *villa ʕubbaha* a sumptuous villa.

ء ب ج د

أبجد *ʕabgad: ʕabgad hawwaz* /n/ ABC (the first letters of the alphabet). *da lissa f-ʕabgad hawwaz* he is just a beginner.

أبجدى *ʕabgadi* /adj */ alphabetical. ‖*raagil ʕabgadi* a man who works by the book.

أبجديّة *ʕabgadiyya* /n pl *-aat*/ alphabet.

ء ب ج و ر

أباجورة *ʕabajuura, ʕabajoora* <Fr *abat-jour*> /n pl *-aat*/ table lamp, standard lamp.

ء ب د

أبد *ʕabad: lil-ʕabad* or *ʕila l-ʕabad* /adv/ forever. *huwwa-ḥna ḥa-nɛiif lil-ʕabad* are we to live forever? ¶ *ʕabadan* **1** /adv always w neg/ ever, at all. *miʃ bi-tgii-li ʕabadan* you never come and see me. *ma-yṣaḥḥ[i]-ʃ kida ʕabadan* this isn't at all the right thing to do. *b-akallim-ak wala-nta saamiɛ ʕabadan* I'm talking to you and you're not listening at all. **2** exclamation of emphatic denial ≈ never! certainly not! not at all! nothing at all! *fikr-ik siktu ɛalayya - ʕabadan* do you imagine that they let me be? no way! *ɑal-laha taɛbaana - ɑalit-lu ʕabadan* he asked her, 'Tired?' She told him, 'Not at all!' *maa-lak ya ʕabu sayyid. - ʕabadan ya bamba ma-fii-ʃ* 'What's wrong, Abu Sayyid?' 'Nothing at all, Bamba.'

أبدى *ʕabadi* /adj/ everlasting, eternal. *ʕil-ḥayaah il-ʕabadiyya* eternal life.

تأبيدة *taʕbiida* /n/ life sentence, life imprisonment. *ʕaruuḥ fiikum taʕbiida* I'll get you even if I go to prison for life for it! I'll kill you!

مؤبّد *muʕabbad* /adj/ for life (of a prison sentence). *ʕitḥakam ɛalee bi-sign[i] muʕabbad* he was sentenced to life imprisonment. -/elliptically/ *xad muʕabbad* or *ʕitḥakam ɛalee bil-muʕabbad* he was given a life sentence.

ء ب د ى –

إيبوذياكن، إبوذياكون *ʕibudiyaakun* (also *ʕibuziyaakun*) <Gr *hupodiakonos*> /n */ *[Chr]* subdeacon.

إبوذياقون *ʕibudiyaaqun*↑ = *ʕibudiyaakun*.

ء ب ذ ى – see ء ب د ى –

ء ب ر [1]

إبرة *ʕibra* /n pl *ʕibar*/ **1** needle. *ʕibra ɛooga* a curved needle. *ʕibar tirikuuh* knitting-needles. *ʕibrit buṣla* compass-needle. *ʕibrit babuur* needle for cleaning the jet of a primus stove. ‖ *ʕibrit il-ɛaguuz* nettles. - *ʕibrit ʕaadam [bot]* yucca. - *beet il-ʕibra* compass. **2** hypodermic needle, (and hence) injection. *ʕid-duktuur katab-li talat ʕibar* the doctor prescribed me three injections. ‖ *bi-yiddi ʕibar* (1) he gives injections. (2) he plays dirty tricks. **3** sting of a scorpion or a bee.

ميبر *meebar* /n pl *mayaabir*/ large needle, sail-needle.

ء ب ر [2]

أوبرا *ʕubra, ʕupira*↑ <It> /n pl *-aat*/ **1** opera. **2** *ʕil-ʕubra* site, in central Cairo, of the former Opera House. *midaan il ʕubra* Opera Square.

ء ب ر ت ت

أوبريت *ʕubritt, ʕubreet* <Fr *opérette*> /n pl *-aat*/ **1** operetta. **2** musical comedy (film).

ء ب ر ت –

أبرتيف *ʕabratiif, ʕabritiif* <Fr *apéritif*> /n/ appetizer.

ء ب ر س –

أبروسفارين *ʕabrusfariin* <cf Gr *prospherein*> /n/ *[Chr]* cloth with which the offertory is covered on an altar. - also *burusfariin*.

ء ب ر ش ى

أبرشيّة *ʕabrafiyya, ʕabrufiyya, ʕibarfiyya* <Gr *eparkhia*> /n pl *-aat*/ *[Chr]* diocese.

ء ب ر ك
أباركة ʔabarka <Gr aparkhê> /n/ a sweet red wine (used particularly as communion wine).

ء ب ر ك –
الإبركسيس ʔil-ʔibraksiis <Gr prakseis> /n/ *[Chr]* the book of Acts of the Apostles.

ء ب ر ه –
الإبرهيميّة ʔil-ʔibrahimiyya /prop n/ Sufi order named after Sidi Ibrahim ed-Disuqi.

ء ب ر ي ت see ء ب ر ت ت: ʔubreet

ء ب ر ي ق
أبريق ʔabriiq /n pl ʔabariiq/ metal or earthenware ewer with a spout (see Pl.A, 2). ʔabriiq faay teapot.

ء ب ر ي ل
أبريل ʔabriil, ʔibriil /n/ April. *kidbit* ʔabriil April fool.

ء ب ر ي م
أبريم ʔabriim /prop n/ Ibrim, a site in Nubia.
أبريمي ʔabriimi /adj/ from Ibrim in Nubia. *balaḥ* ʔabriimi a variety of high quality date, usually sold dry.

ء ب ز ي م
أبزيم ʔabziim /n pl -aat, ʔabaziim/ buckle. - also ʔabziin.

ء ب ز ي ن
أبزين ʔabziin /n pl -aat, ʔabaziin/ buckle. - also ʔabziim.

ء ب ز ي – see ء ب د ي –: ʔibuziyaakun

ء ب س see ء ب ي س: ʔabiis

ء ب س ي ه
أبسيه ʔabseeh <Fr abcès> /n pl -aat/ *[path]* abscess.

(ء ب ص ل –)
إبصاليّة ʔibṣaliyya, ʔabṣaliyya, ʔibṣaaliya <Gr psalia> /n pl -aat/ *[Chr]* hymn based on a passage from scripture.
إبصلموديّة ʔibṣalmudiyya, ʔabṣalmudiyya, ʔibṣalmuziyya <Gr psalmodia> /n/ *[Chr]* book of Coptic liturgical hymns.

ء ب ط
ابط ʔibṭ /n pl ʔabaaṭ/ 1↑ armpit. 2 *[bot]* base of a leaf on a plant. - also *baaṭ*.

ء ب ظ
أبّظ ʔabbaẓ 1 /vt/ to squeeze in the hand, fondle. ʔabbaẓi l-ɛagiin ɛaʃaan yiṭra squeeze the dough to make it soft. ɛammuala tʃabbaẓ fi-xduud ɛayyil-ha she is fondling her child's cheeks. 2 /vi/ to masturbate. - vn taʃbiiẓ; ava/pva miʃabbaẓ.
اتأبّظ ʔitʃabbaẓ /vi/ to be squeezed. - iva mitʃabbaẓ.

ء ب ع د see ب ع د: ʔabɛadiyya

ء ب غ ل –
أبغلمسيس ʔabuvalamsiis <Gr apokalypsis> /n/ *[Chr]* Book of Revelation, Apocalypse. *leelit* ʔabuvalamsiis the night of Holy Saturday, when the Book of Revelation is read.

ء ب ك ا ت –
أبوكاتو ʔabukaatu (also ʔabukaadu[1]) <It avvocato> /n pl ʔabukatiyya, ʔabukadiyya/ lawyer, advocate. - also ʔavukaatu, ʔavukaadu.

[1] ء ب ك ا د
أبوكادو ʔabukaadu[2] <Sp> /coll n/ avocado tree(s), avocado pear(s). - also *avukaadu*.
أبوكادوهاية ʔabukaduhaaya /unit n, pl -aat/ an avocado pear. - also ʔavukaduhaaya.

[2] ء ب ك ا د see ء ب ك ا ت: ʔabukaadu[1]

ء ب ل
أبلة ʔabla <T abla older sister> /n pl -waat, ʔablaat, ʔablahaat/ title of, and respectful form of address or reference to, an older woman, applied in particular by children to a schoolteacher ≈ Miss.

ء ب ل ت –
أبلاتين ʔablatiin <Fr platine> /n/ 1 platinum. 2 /coll n/ *[auto]* contact breaker(s).
أبلاتينة ʔablatiina /n pl -aat/ *[auto]* contact breaker. - also *bilatiina*.

ء ب ل س see ء ب ل ي س: ʔibliis, ʔabliis

ء ب ل س –
أبلاسيه ʔablaseeh <Fr placier> /n pl -aat/ 1 sales representative. 2 cinema usher. - also *balaseeh*.

ء ب ل ك see ء ب ل ى ك: ʃabliik, ʃabliika

ء ب ل ك –
أبلاكاش ʃablakaaʃ <perh Fr placage> /n/ plywood.

ء ب ل ى ز
أبليز ʃabliiz, ʃibliiz /n/ alluvial deposit of the Nile. - /adjectivally/ ṭiin ʃabliiz soft mud.

ء ب ل ى س
إبليس ʃibliis, ʃabliis /n pl ʃabalsa/ devil, demon, specifically Satan. ʃibn il-ʃabalsa the sly devil. ɛafam ibliis fig-ganna [prov] (Satan's hope of Paradise) a total impossibility.

ء ب ل ى ك
أبليك ʃabliik <Fr applique> /n pl -aat, ʃabaliik/ **1** wall-lamp, bracket-light. **2** ornamental wall-relief.
أبليكة ʃabliika /n pl -aat/ = ʃabliik.

ء ب ن [1]
ابن ʃibn /n pl ʃabnaaʔ↑ (or more often ʃawlaad, q.v. under walad)/ **1** son. ʃiddi ʃibn-ak li-lli luu ʃawlaad [prov] (entrust your son to one who himself has children) give responsibility to those with experience. **2** ya-bn-i informal form of address to a boy or younger man ≈ son, my lad. **3** /always in constr/ one brought up in a specified place or social milieu. ʃibn ir-riif a countryman. ʃabnaaʔ il-qaahira Cairenes. ʃabnaaʔ ik-kiniisa regular church-goers. – for other phrases beginning with ʃibn (e.g., ʃibn i naas), look up the second component of the phrase. See further under ب ن ى [2]

ء ب ن [2]
أبّن ʃabbin↑ /vt/ to eulogize (a deceased person). ḥaflit taʃbiin memorial ceremony. - vn taʃbiin; ava miʃabbin.
اتأبّن ʃitʃabbin↑ /vi/ to be eulogized (at a commemorative ceremony or the like). - iva mitʃabbin.

ء ب ن [3]
أبنة ʃubna /n/ passive sodomy. ɛandu (or fii) daaʃ il-ʃubna he is a passive sodomite.
مأبون maʃbuun /n */ catamite, passive sodomite. ‖ya mara ya maʃbuuna you slut!

ء ب ن و ز see ء ب ن و س: ʃabanooz

ء ب ن و س
أبنوس ʃabanoos (also ʃabanooz) <Gr ebenos> /n/ ebony. ‖ɣalam ʃabanoos a fountain pen.

ء ب ن ى ه
أبونيه ʃabuneeh <Fr abonné> /n pl -aat/ season ticket.

ء ب ه see ء ب ب ه: ʃubbaha

ء ب ه ا م see ب ه م [2]

ء ب و see ء ب ب [1]: ʃabu, ʃabaween, ʃabawi, ʃubuwwa

ء ب و ا
أبوا ʃubwa <Fr hautbois> /n pl -aat/ oboe.

ء ب و ن ا see ء ب ب [1]: ʃabuu-na

ء ب ى
أبى ʃaba (a) /vt/ to refuse. dayman yiʃba n-naṣiiḥa he is always against being advised. - vn ʃibaaʔ↑; ava ʃaabi.
أبيّ ʃabiyy↑ /pl ʃubaa/ **1** /adj/ of great integrity. **2** /n/ person of integrity.
اتأبّى ʃitʃabba /vi/ to play hard-to-get, be reluctant. sayɣa d-dalaal wi-b-titʃabba ɣalee she coquettishly refuses him. - vn taʃabbi↑; ava mitʃabbi.

ء ب ى ب
أبيب ʃabiib <Copt> /n/ Abib, the eleventh month of the Coptic year (early July to early August). ʃabiib ṭabbaax il-ɛinab wiz-zibiib [prov] Abib cooks the grapes and raisins (this being the time of the grape harvest). min yaakul il-muluxiyya f-ʃabiib yigiib li-baṭn-u ṭabiib [prov] he who eats Jew's mallow in Abib will (have to) bring a doctor for his stomach.

ء ب ى س
أبيس ʃabiis /prop n/ /n/ the Egyptian god Apis. ɛaamil zayy i ɛigl i ʃabiis (he looks like the Apis bull) ≈ he is very stocky.

ء ب ى ه
أبيه ʃabeeh, ʃabeeh <T ağabey> /n pl -aat, -aat/ elder brother.

ء ت ا ب ى
أتابي ʃataabi (also ʃataari) /w pron suff ʃatabii-, ʃatarii-/ demonstrative indicating the discovery of a reason or fact. ʃatabii-k ma-get-ʃ so that's why you didn't come! ruḥt aqbaḍ wi-ʃataari l-filuus lissa ma-wiṣlit-ʃ I went to draw my salary and it turned out that the money hadn't arrived yet. (Cf ʃagrann)

ءتارى see ءتابى : ʔataari

ءتب see ءتابى : ʔataabi

ءتبيس
أوتوبيس ʔutubiis <Fr *autobus*> /n pl *-aat*/ bus. *ʔil-ʔutubiis in-nahri* the (Nile) river bus.

ءتر[1] see ءتابى : ʔataari

ءتر[2] see ءسر[3] : ʔatar

ءتر[3] see ءتيرى : ʔiteer, ʔuteer

ءترب ل
إتربل ʔitrabil /n/ *[naut]* keel.

ءترب –
أتربيل ʔutrubiil↓ <Fr *automobile*> /n pl *-aat*/ car. - also *ʔutrumbiil, ʔutumbiil.*

ءترم –
أترمبيل ʔutrumbiil↓ (also *turumbiil*) <Fr *automobile*> /n pl *-aat*/ **1** car. **2** *ʔutrumbiil (ħart)* tractor, especially with plough attached. - also *ʔutrubiil, ʔutumbiil.*

ءترنج
أترنج، أطرنج ʔutrung /coll n/ *[bot]* Adam's apple(s) (Citrus medica var. cedrata). - also *turung*.

ءتس ت –
أوتوستوبّ ʔutustubb <Fr *autostop*> /n/ hitch-hiking.

ءتف ار
إتوفار ʔitufaar <Fr *étouffoir*> /n pl *-aat*/ **1** candle-snuffer. **2** damper-felt (of a piano key).

ءتف و
إتفوه ʔitfuuh, ʔitfuww onomatopoeia for the sound of spitting, indicating disgust. *ʔitfuuh (ʒaleek)* ≈ how disgusting (you are)! - also *tifuuh, tifuww*.

ءتق ر –
أوتوقراطى ʔutuqraaṭi <perh Fr> **1** /n */ autocrat. **2** /adj */ autocratic.
أوتوقراطيّة ʔutuqraaṭiyya↑ /n/ autocracy.

ءتك
أتك ʔatak <T *etek*> /n/ tape along the lower edge of a long garment to save wear.

ءتك ل –
أوتوكلاف ʔutuklaaf <perh Fr> /n pl *-aat*/ autoclave, strong vessel in which superheated steam under pressure is used for sterilizing or cooking.

ءتكيت
إتيكيت ʔitikeet <Fr> /n/ **1** (style of) etiquette. *da lil-gawaaz ʒandina ʔitikeet* marriage with us has a certain etiquette. **2** /pl *-aat*/ label, tag.

ءتل
أثل ʔatl /coll n/ tamarisk tree(s).
أثلة ʔatla /unit n, pl *-aat*/ a tamarisk tree.

ءتل ى –
أتيليه ʔatilyeeh, ʔatileeh <Fr *atelier*> /n pl *-aat*/ studio, workshop.

ءتم ا – see ءتم ت – : ʔutumaatik

ءتم see ىتم[2]

ءتم ب –
أتمبيل ʔutumbiil or ʔutumubiil (also *tumbiil*) <Fr *automobile*> /n pl *-aat*/ **1** car. **2** *ʔutumbiil (ħart)* tractor, especially with plough attached. - also *ʔutrubiil, ʔutrumbiil.*

ءتم ت –
أتوماتك ʔutumatik (also *ʔutumaatik*) <Engl> /adj invar/ automatic.
أتوماتيك ʔutumatiik <Fr> /adj invar/ automatic.
أتوماتيكى ʔutumatiiki /adj/ automatic.

ءتم ى ن
إتمين ʔitamiin <Fr *étamine*> /n/ soft evenly-woven material (especially that used as a base for cross-stitch embroidery).

ءتن ا – see ءتن ى[2] : ʔitnaafar

ءتن ى ن see ءتن ى[2] : ʔitneen

ءته ل –
إتهليصا ʔithaliiṣa <Copt> /interj/ run aground! (in the jargon of Nile boatmen).

ءتو
إتاوة ʔitaawa, ʔataawa /n pl *-aat*/ ransom money, protection money.

ء ت ي

أتى ʔata↑ *(i)* /vt/ to come to. *ʔiṣrif ma fil-geeb yiʔtii-k ma fil-veeb [prov]* ≈ *carpe diem*, tomorrow will take care of itself. *kull[i] ʔaatin qariib [prov]* everything (destined) to come is (relatively) imminent. - ava *ʔaati*.

الآتي *ʔil-ʔaati↑* /n/ the following. *ʔilli ḥaṣal il-ʔaati* what happened is this. *ka-l-ʔaati* as follows.

اتأتّى *ʔitʔatta* /vi/ to result. *ma-yitʔattaa-ʃ ɛannu ḥaaga* nothing will come of it. - ava *mitʔatti*.

آتى *ʔaata* /vt/ **1** to give, grant. *ʔataa rabb-i-na bi-lli nifs-u fii* God granted him all that he wished. **2** to afflict, curse. *ʔallaah yiʔatii-ha b-muṣiiba taxud-ha* may God afflict her with a fatal catastrophe! **3↑** = *waata*. - ava *miʔaati*.

واتى *waata* (also *ʔaata↑*) **1** /vt/ to be favourable, be propitious. *ʔig-gaww[i] mwaati* the weather is favourable. **2** /vi/ to favour, make things easy for (s.o.). *ʔil-ḥazz[i] wataa-ni* fortune smiled on me. *ḥabibt-u mwatyaa* his girlfriend is exactly on his wavelength. - vn *miwatiyya, muwatiyya*; ava *miwaati*.

استأتى *ʔistiʔatta↓* /vi/ to result. *wi-ʔeeh ḥa-yistiʔatta min ɛadam muwafqit-u* and what will come of his disapproval? - ava *mistiʔatti*.

ء ت ي ر see also ء س ي ر

أتير، أثير *ʔiteer, ʔuteer* <Fr *éther*> /n pl *-aat*/ ether.

ء ث ث see [3] ء س س

ء ث ر see [3] ء س ر and ء ت ي ر and ء س ي ر

ء ث ل see ء ت ل

ء ث م see [2] ء س م

ء ج ا ي

أجاى *ʔugaay* <Copt> /interj/ help! *ḥ-aqɛud ʔaqrab fiik li-ḥadd[i] ma tquul ʔugaay* I'll keep beating you until you call for help! - also *gaay*.

[1] ء ج ب

أجبيّة *ʔagbiyya* <Copt> /n pl *ʔagaabi*/ *[Chr]* book of the daily office, book of hours.

[2] ء ج ب see و ج ب: *ʔiigaab, ʔigaabi, ʔigabiyya*

ء ج ر

أجر *ʔagr, ʔagr* /n pl *ʔuguur*/ wage, pay, recompense. *ʔil-ʔagr[i] miʃ qadd il-maʃaqqa* the recompense isn't worth the hardship. ‖ *ʔil-ʔagr[a] ɛal-alla* ≈ God will reward (said in resignation to ingratitude). - *wil-ʔagr[a] ɛal-alla* set phrase used to boast of a reputation, as in *da-na l-miɛallim dabʃa wil-ʔagr[a] ɛal-alla* ≈ I'm Boss Dabsha, everyone knows me! - *ʔagr[i] w-ɛafya* (may you enjoy) recompense and (further) well-being (said to one recovered from illness). - *ɛaẓẓam allaahu ʔagr-ak* may God make your recompense great (an expression of condolence).

أجرة *ʔugra* /n pl *ʔuguur, ʔugar*/ **1** wage, pay. **2** rent. *ʔugrit il-ḥooḍ* dock dues. **3** fare. *ʔugrit it-taksi* the taxi fare. **4** (also *ɛarabiyya ʔugra*) taxi.

أجرى *ʔugari* /n pl *-yya*/ day labourer.

إيجار *ʔigaar* /n pl *-aat*/ **1** lease. **2** rent.

إيجارة *ʔigaara* /n pl *-aat, ʔagaayir/ [rur]* document in which the conditions governing a lease of land are written.

أجير *ʔagiir* /n pl *ʔugara*/ hireling, hired worker. *ʔagiir bil-yomiyya* day labourer.

مأجور *maʔguur* /adj */ **1** hired, wage-earning. **2** bribed. **3** rewarded (by God) for pious deeds.

أجّر *ʔaggar* /vt/ **1** to lease, rent, hire. *ḥ-aʔaggar ʃaqqa w-ʔatgawwiz fiiha* I'm going to rent an apartment to start my married life in. *ʔaggart[a] ɛagala* I hired a bicycle. **2** to lease out, rent out. *raaḥ baani l-ɛimaara w-ʔaggar-ha kull-a-ha* he went and built the apartment building and rented it all out. - vn *taʔgiir*; ava/pva *miʔaggar*.

اتأجّر *ʔitʔaggar* **1** /vt/ to hire, let, rent, lease. **2** /vi/ to be hired, be rented, be leased. *mitʔaggar ɛala l-qatl* hired to kill. - ava/iva *mitʔaggar*.

آجر *ʔaagir [rur]* **1** /vt/ to share the reward of God's blessing with (o.a.). **2** /vi/ to work as a casual farmhand for a daily rate. - vn *miʔagra*; ava *miʔaagir*.

مؤاجر *muʔaagir* /n */ lessee, tenant.

اتآجر *ʔitʔaagir* /vi/ to earn a reward (from God). *yalla biina nitʔaagir fi-tarbiyyit il-bint il-yitiima di* let us get a reward (from God) by bringing up this orphan girl. - vn *miʔagra*; ava *mitʔaagir*.

استأجّر *ʔistiʔaggar↓* /vt/ **1** to employ, hire. *ʔistiʔaggar-lu kam raagil ɛaʃaan yigmaɛuu-lu l-maḥṣuul* he hired some men to gather the crop for him. **2** to rent. - ava *mistiʔaggar↓*.

مستأجر *mustaʔgir↑* /n */ lessee, tenant.

ء ج ر ن

أجرن *ʔagrann, ʔagrann* demonstrative indicating the discovery of a reason or fact. *ʃiliɛ maṭruud*. - *ʔagrann-u kaan zaɛlaan lamma ʃuft-u* 'He was thrown out.' 'Now I understand why he was angry when I saw him.' *ʔistanneet-u fil-maktab wi-ʔagrann-u msaafir* I waited

for him at the office, but it became clear that he had gone away. *ʕil-qaṭr^{i} ma-wiṣil-f^{i} ʕagrann il-maḥaṭṭa faḍya* the train hasn't arrived, which is why the station is empty. (Cf *ʕataabi, ʕataari*)

ءجرود see ج ر د: *ʕagruud, ʕagruudi*

ءجري
أجوريه *ʕajureeh* <Fr *ajouré*> /adj invar/ perforated. - also *ʕazureeh*.

ءجز [1] see also ج ز ء [1]
أجزة *ʕagza* /coll n/ chemicals.
أجزجي *ʕagzagi* /n pl *-yya*/ pharmacist.
أجزاخانة *ʕagzaxaana* /n pl *-aat*/ **1** pharmacy, chemist's shop. **2** first-aid box, medicine chest.

ءجز [2] see also ج و ز [1]
أجّز *ʕaggiz* /vi/ to take a holiday, take leave. - vn *taʕgiiz*; ava *miʕaggiz*.
استأجز *ʕistaʕgiz*↓ /vi/ to ask permission, take leave. - vn *ʕistiʕgaaz*; ava *mistaʕgiz*.

ءجل
أجل *ʕagl: l-agl, min ʕagl* /prep/ for the sake of. *l-agl^{i} magd allaah [Chr]* for the sake of God's glory.
¶ *l-agl^{i} ma* /conj/ so that.
أجل *ʕagal* /n/ **1** (destined time of) death. *ʕagal-u ḳarrab* the time when he must die drew near. *ʕizzaay maatit kida - ma-kanit-f^{i} ɛayyaana. - wi-maa-lu - ʕagal-ha kida* 'How come she died just like that? She wasn't sick.' 'So what? Her time was up.' ‖*gaab ʕagal-* to finish off, polish off, as in *ga ḳaɛad ɛas-sufra gaab ʕagal-ha* he went and sat down at the dinner table and polished off everything on it. **2**↑ (appointed) time. *ʕintaha ʕagal id-deen* the period granted for repayment is over. ‖*bil-ʕagal* on credit. - *ʕila ʕagal ɣeer musamma* to an unspecified point in the future, *sine die*.
آجل *ʕaagil* /adj/ delayed, postponed. *xalli l-miɛaad ʕaagil* let the appointment be postponed. - /adverbially/ *ɛaagil walla ʕaagil ḥa-ysaddid diyuun-u* sooner or later he will pay his debts.
أجّل *ʕaggil* /vt/ to postpone, delay. *ma-tʕaggil-ha l-yoom il-ḥadd* why don't you put it off till Sunday? - /the literary passive imperfect occurs/ *kull il-iltizamaat di tuʕaggal li-muusim iṣ-ṣeed* all these commitments are postponed until the hunting season. - vn *taʕgiil*; ava *miʕaggil;* pva *muʕaggil*.
اتأجّل *ʕitʕaggil* /vi/ to be postponed, be delayed. - iva *mitʕaggil*.

ءجل س
أجلاسيه *ʕaglaseeh* <Fr *glacé*> /adj invar/ patent (of leather).

ءجن
أجنة *ʕagana* <perh Copt> /n pl *-aat, ʕagan*/ cold chisel.

ءجند
أجندة *ʕajinda* <perh It *agenda*> /n pl *-aat*/ **1** notebook. *ʕajindit il-ɛanawiin* address book. **2** diary. **3** *[comm]* list of promissory notes according to date due.

ءجنس
أجنس *ʕajans* <Fr *agence*> /n pl *-aat*/ car showroom, car-dealing agency.

ءجنط
أجنطة *ʕaganṭa* <It *agguanta*> /interj/ *[naut]* avast!

ءجوج
أجوج *ʕaguug: ʕaguug wi-maguug* troublesome people. *kaanu zaḥmiin if-ʕaariɛ zayy^{i} ʕaguug wi-maguug* they were overcrowding the street and causing trouble.

ءجور
أجور *ʕajuur* <Fr *ajour*> /n/ *[needlew]* open-work.

ءجيو
أجيو *ʕagyu* <It *aggio*> /n/ premium, interest (on a loan).

ءح
أح *ʕaḥḥ* exclamation expressing **1** reaction to extreme heat or cold ≈ ouch! **2** *[women]* pleasure during sexual intercourse.
أحّا *ʕaḥḥa [coarse]* exclamation of extreme disapproval. *ʕaḥḥa ya ɛumar [women]* ≈ fuck that!
أحّيه *ʕaḥḥeeh [women in trad soc]* exclamation of surprise ≈ my! (often used sarcastically in badinage). *ʕaḥḥeeh fuufi l-beet kibiir ʕizzaay* my! what a big house! *ʕaḥḥeeh ḥa-txuffi f-ɛibb-i walla ʕeeh* ≈ my, my! you think you can fool me?

ءحد see also و ح د
أحد *ʕaḥad*↑ /n/ **1** one of. *ʕaḥad minna* one of us. *midd^{i} ʕaḥad id-diraɛeen* stretch out one of your arms! **2** (also

yoom ʕaḥad) a Sunday. (*yoom*) *il-ʕaḥad* (this) Sunday. **3** *ʕil-ʕaḥad* the One (epithet of God).

آحاد *ʕaḥaad* /pl n/ **1** *[math]* ones, units. *xaanit il-ʕaḥaad* the units column. **2** jeweller's term for a one-piastre coin.

حداشر، أحد عشر *ḥidaaʃar* **1** /num pl *-aat*/ eleven. **2** *ʕil-ḥidaaʃar* /adj invar/ the eleventh.

ءحلىل see حلل: *ʕiḥliil*

ءحم

إحم *ʕiḥim* onomatopoeic for the clearing of the throat. *ʕaal ʕiḥim wi-xaff*^{i} *fil-mawḍuuʕ* he said 'Ahem' and got down to business. ‖*min ʕeer ʕiḥim wala dastuur* without so much as a by-your-leave.

ءحنا

إحنا *ʕiḥna* /pers pron/ we. *ʕiḥna gayyiin* we're coming. - /used in emphasis of the pron suff *-na*/ *kallim-na ʕiḥna* we are the ones you should speak to! ‖*dayman yiʕuul ʕiḥna wi-ḥna* he's always boasting.

ءخ see ءخخ

ءخت

أخت *ʕuxt* /n pl *ʕixwaat*/ **1** (full or half-) sister. **2** polite form of address or reference to any woman. *ʕil-ʕuxt*^{a} *ʕayza ḥaaga* ≈ does Madam want anything? *ya ʕuxt-i* a formal mode of address by a woman to a woman. ‖*ya-xt-i* an informal mode of address by a woman to a woman. - *ya-xt-i ʕaleeha [women]* how cute she is! **3** sister (member of a Christian religious order). *ʕil-ʕuxt*^{i} *maryim* Sister Mary. **4** male's female counterpart thought to exist in the spirit world (also called *ʕariina*). — /no pl, w fem n as referent/ **5a** twin of. *ʕandi jakitta ʕuxt illi ʕinta labis-ha* I have a jacket just like the one you're wearing. ‖*ma-l-haa-ʃ ʕuxt* she (or it) is peerless, as in *ma-l-haa-ʃ ʕuxt*^{i} *f-gamal-ha* she is of matchless beauty. **5b** equivalent or companion piece in a succession. *ʕannit talat waṣlaat kull*^{i} *waḥda ʕaḥla min ʕuxt-a-ha* she sang three songs, each one better than the one before.

ءخخ^{1}

أخ *ʕaxx, ʕaxx*^{1} /n, in constr *ʕaxu*, w pron suff *ʕaxuu-* (1st sing *ʕaxuu-ya*)/ **1** /pl *ʕixwaat*/ (full or half-) brother. - /in commercial contexts pl *ʕixwaan*/ *ʃirkit ʕali w-ʕumar ʕabd ir-raaziq ʕixwaan* the company of Ali and Omar (the sons of) Abd el-Raziq, Bros. **2** /pl *ʕixwa*/ polite form of address or reference to any man. *ʕil-ʕaxx*^{i} *min feen* (1) where are you from, friend? (2) where is the gentleman from? ‖*ya ʕax-i* or *ya-x-i* informal mode of address to a man ≈ mate, my friend. — /pl *ʕixwaan*/ **3** member of a Sufi brotherhood. **4** female's male counterpart thought to exist in the spirit world (also called *ʕariin*). — /no pl, w masc n as referent/ **5a** twin of. *ʕana ʕandi ʕamiiṣ ʕaxu lli ʕaleek* I have a shirt just like the one you've got on. **5b** equivalent or companion piece in a succession. *bana talat biyuut kull*^{i} *beet ʕaḥsan min ʕaxuu* he built three houses, each better than the other.

¶ *ʕaxii-na* an abrupt and slightly offensive form of address or reference to a man. *ʕaxii-na da lli ʕaaʕid hinaak* ≈ that bloke sitting there.

إخوات *ʕixwaat* /pl n, masc and fem/ siblings. *ʕandi talat ʕixwaat wilaad wi-tneen banaat* I have three brothers and two sisters. ‖*ya-xwaat-i*↓ *[women]* exclamation of surprise or exasperation. - *ʕin kuntum ʕixwaat itḥasbum [prov]* ≈ even if you are brothers and sisters, settle accounts (so as to remain on good terms).

إخوان *ʕixwaan* /pl n/ **1** brothers (as business partners). *ʃirkit ʕali w-ʕumar ʕabd ir-raaziq ʕixwaan* the company of Ali and Omar (the sons of) Abd el-Raziq, Bros. **2** brethren. ‖*ʕil-ʕixwaan (il-muslimiin)* the Muslim Brothers. **3** friends, buddies. *ʕixwaan-ak fiʃ-ʃuɣl* your workmates. ‖*ya-xwan-na* (1) ≈ hey, everybody! (2) exclamation of exasperation. **4** counterparts of human beings, thought to exist in the spirit world.

إخوانجى *ʕixwangi* /n pl *-yya*/ *[deris]* Muslim Brother.

أخوى *ʕaxawi* /adj */ fraternal, friendly. *di ḥaaga ʕaxawiyya* this is a matter between friends.

أخوّة *ʕuxuwwa* /n/ brotherhood, friendship.

ءخخ^{2}

أخّ *ʕaxx*^{2} /interj/ exclamation of exasperation.

إخ *ʕixx* /interj/ exclamation of disgust or repulsion ≈ ugh! - also *ʕixxiih*.

ءخخيه

إخّيه *ʕixxiih* /interj/ exclamation of disgust ≈ ugh! shame! *ʕeen-i ʃii w-ʕaḳuul ʕixxiih* said of one who publicly denigrates what he secretly desires. - also *ʕixx*.

ءخد

خد، أخذ، أخذ *xad, ʕaxad (yaaxud)* /vt/ **1** to take. *xad ik-kitaab bitaaʕ-u wi-miʃi* he took his book and went off. ‖*xad bi-yadd* to assist, as in *xad bi-yadd-i f-waḳt iz-zanḳa* he helped me when I was in a tight spot. - *yaaxud wi-yiddi (fi-kalaam)* there is give-and-take (in

conversation) with him. -ʕil-ʃaxd^{i} *wil-ɛaṭa* (1) give-and-take. (2) trade, business. **2** to take along with one. *ma-tinsaa-ʃ taaxud iʃ-ʃanṭa* don't forget to take the bag. *xud-ni maɛaak* take me with you. ‖*rabb-i-na yaxd-u* may God take him off! may he die! -*ma-ḫadd^{i}-ʃ waaxid minha ḫaaga [prov]* you can't take any of it with you (when you die). **3** to convey, transport. *ʕit-taks^{i} xad-ni l-maḫaṭṭa* (or *lil-maḫaṭṭa*) the taxi took me to the station. **4** to administer to oneself. *xud id-dawa* take the medicine. *ḫ-aaxud duff* I'll have a shower. ‖*xad il-kaar* he learned the trade. **5** to require. *min hina li-skindiriyya b-yaaxud talat saɛaat* (the journey) from here to Alexandria takes three hours. *ʕil-laḥma ḫa-taaxud siwa ktiir* the meat will take a long time to cook. **6** to treat, deal with. *ma-taxud-ʃ il-masʕala gadd* don't take the matter seriously! ‖*xud-ni ɛala ɋadd^{a} ɛaɋl-i* humour me! go along with me! **7** to choose and/or use (s.th. appropriate for a particular purpose). *bi-naaxud ɋumaaʃ xafiif ɛaʃaan il-biṭaana* we get lightweight material for the lining. *naaxud il-ʕutubiis* let's take the bus. **8** to undertake. *miin ḫa-yaaxud door il-baṭal* who will play the leading role? *xadit il-imtiḥaan* she sat for the examination. *laazim naaxud qaraar* we must make a decision. **9** to receive, obtain, gain. *ʕin-naggaar bi-yaaxud kaam ɛala ʃ-ʃuɣl^{i} da* how much is the carpenter paid for this work? *xadt^{a} ḥukm^{a} ɛalee* I obtained judgement against him. *ʕin ʃa-lla taaxud id-dukturaah* I hope you get a doctorate. *laazim taaxud ʕizn* you must obtain permission. *ʕil-mutoor xad surɛit-u* the engine picked up speed. *la huwwa xad bil-yimiin wala biʃ-ʃimaal* he gained nothing whatsoever. **10** to marry. *ʃaxuu-k xad miin* whom did your brother marry? **11** to sustain, receive (s.th. imposed or inflicted), be affected by. *xad ḥukm^{i} taani* he got a second sentence. *xadit bard* she caught a cold. *ḫa-taaxud ḍarbit ʃams* you'll get sunstroke. *ʕil-kartoon xad bitumiin* the cardboard was given a coat of bitumen. *ʕis-saɋf^{i} xad ruṭuuba* the ceiling became damp. *xad(-lu) ɋalameen* he got slapped a couple of times. *xadit (laha) kilmiteen ʃi-ɛaḍm-a-ha* she was subjected to harsh words. ‖*tiɛiif wi-taaxud ɣer-ha* may you live to take another knock (expression of light-hearted consolation after a minor misfortune). **12** to subject (s.o. or s.th.) to (s.th.) in a precipitate manner. *xad-ni kaffeen* he upped and slapped me a couple of times. *xud il-ḫeeṭa wiff* give the wall a quick coat of paint! *ḫa-taxud-ni muxalfa* are you going to slap a ticket on me? — /vi/ **13** to derive power, motion etc. *ʕiṭ-ṭambuur bi-yaaxud min il-mutoor* the drum derives its motion from the motor. -vn *ʃaxd, ʃaxadaan*; ava *waaxid*.

¶ *xud* <cf Copt> /fem *xudi*, pl *xudu*/ come here! -*xud ɛandak* /fem *xudi ɛandik*, pl *xudu ɛanduku*/ (1) take that! (2) wait! hold it! (3) ≈ you'd be amazed at how much (or how many), as in *wi-xud ɛandak ʕifi suwwaaḥ ʕingliiz wi-ʃamrikaan wi-ʃalmaan* you should have seen how many tourists there were, English, Americans and Germans! *wil-maṭara ɋaalit xud ɛandak* ≈ the rain came down in torrents. -*xud wi-haat* /adverbially/ *[soccer]* one-touch. -*xad fi-nafs-(u)* (1) to be conceited, as in *waxda ɋalam fi-nafs-a-ha* she is so conceited! (2) to be offended, as in *xad fi-nafs-u minni* I offended him. -*xad fi-wiff-(u)* to make a break for it, to take to one's heels. -*xad wi-dda* to exchange words, as in *mudir-na ɛaṣabi ma-b-tiɋdar-ʃ^{i} taaxud wi-tiddi maɛaa* our director is bad-tempered; you can't discuss things with him, *xud wi-ddi maɛaa ɛala baal il-buliiṣ ma yiigi* keep him talking until the police come. -*xad ɛala* (1) to get used to, take to, as in *ʕiḫna waxdiin ɛala kida* we've got used to this state of affairs. (2) to act familiarly with, be fresh with, as in *ma-txalli-huu-ʃ yaaxud ɛaleek* don't let him get fresh with you! (3) to aim at, as in *xud ɛala ʃ-ʃagara di bil-bunduɋiyya* aim the rifle at the tree, *ʕil-ɋayyaas bi-yaaxud ɛala ḫaaga sabta* the surveyor takes a bearing on a fixed object. (4) to go by, follow, as in *ma-taxud-ʃ^{i} ɛala kalaam ʃaxuu-k* don't go by what your brother says. -*xad baɛḍ-u* see *baɛḍ. xad bi-xaaṭir, xad ɛala xaṭr-(u)* and *xad il-xaaṭir* see *xaaṭir*. -*xad baal-(u)* see *baal. xad salaam* see *salaam*.

أَخَّذ، وخَّد، أَخَّذ ʃaxxid or *waxxid* /vt/ to accustom, cause to get used to. *ʕinta lli waxxidt-u ɛala ɋillit il-ʃadab* you're the one who accustomed him to bad manners. *ʕibn-ik ɀayy^{i} ma trabbii wi-gooz-ik ɀayy^{i} ma twaxxidii [prov]* you can raise your son, but you must train your husband. -vn *taʃxiid*; ava *miʃaxxid, miwaxxid*.

اتأَخَّذ، اتوخَّذ ʕitʃaxxid or *ʕitwaxxid* /vi/ to be made accustomed. -iva *mitʃaxxid, mitwaxxid*.

آخَذ ʃaaxiz /vt/ **1** /usu neg/ to find fault with, blame. *ma-tʃaxiz-nii-ʃ* don't misunderstand me, don't get me wrong. *ma-tʃaxz-uu-ʃ ʃaṣl-u miʃ min hina* don't blame him -he's not from here. **2** to hold accountable. *ʃaxiɀt-u ɛala kull^{i} ɣalṭa ɛamal-ha* I held him accountable for every mistake he made. -vn *muʃaxza*; ava *miʃaaxiz*.

مؤاخَذة *muʃaxza* /n pl *-aat*/ offence, fault. *fii ɛaleek muʃaxzaat fiʃ-ʃuɣl* there are faults you are accused of in your job. ‖*la muʃaxza* please forgive me, no offence intended; -often used, especially by the less educated, when mentioning any mundane or lowly object, as in *gibt-i-lak la muʃaxza g-gazma* ≈ I've brought you the

shoes, if you'll excuse my mentioning them.

اتّاخذ ʔittaaxid /vi/ **1** passive of *xad*. **2a** to be taken aback, be startled. *ʔawwil ma ʃuft*^{i} *waraqit il-imtiḥaan ittaxidt* I got a shock when first I saw the exam paper. **2b** to be agitated, be upset. *maa-lak bi-tittaaxid kida* why are you taking on so? - ava/iva *mittaaxid*.

اتّخذ ʔittaxaz↑ *(yittixiz, yattaxiz)* /vt, literary passive forms also occur/ **1** to effect. *ʔil-ʔigraʔaat illi b-tuttaxaz* the measures which are taken. **2** to take over, take on, acquire. *ʔil-maẓaahir illi b-yattaxizuu-ha* the appearances which they acquire. **3** to treat, regard. *ʔil-ḥikaaya di ʔuttuxizat sabab li-ʔilγaaʔ il-ʔaḥzaab* this matter was used as a pretext for the dissolving of political parties. - vn *ʔittixaaz*; ava *mittixiz*; pva *muttaxaz*.

ءخذ see ءخد

ءخر

آخر ʔaaxar↑ /adj, fem ʔuxra, pl ʔaaxariin/ other. *min ʔinsaan li-ʔaaxar* from one person to another. *min waqt*^{i} *l-ʔaaxar* from time to time. *ʔil-ḥayaah il-ʔuxra* the life to come (in the hereafter).

أخير ʔaxiir /adj */ final. *ʔil-faṣl il-ʔaxiir min il-masraḥiyya* the final act of the play. *ʔil-mayya ir-rabʕa wil-ʔaxiira* the fourth and final watering.

¶ ʔaxiiran /adv/ finally. *kaan rakib-ha sittiin ʕafriit li-ḥadd*^{i} *ma ʔaxiiran wiṣil* she was on tenterhooks until he eventually arrived.

آخر ʔaaxir /n/ **1a** /w foll indef n/ the last. *ʔaaxir beet* the last house. *fi-ʔaaxir laḥẓa* at the last moment. **1b** extreme, utmost. *ʔaaxir taʕab* an extreme of fatigue. *yigri ʕala ʔaaxir surʕa* he runs extremely fast. *ramaa ʕala ʔaaxir diraaʕ-u* he threw it as far (or: as hard) as he could. *ʕala l-ʔaaxir* to the last degree, to the utmost, as in *raagil manfuux ʕala l-ʔaaxir* an extremely pompous man. *lil-ʔaaxir [naut]* hard over! **2** *ʔil-ʔaaxir* the Ultimate (epithet of God). **3** /pl *ʔawaaxir*/ end, latter part. *ʔil-ʔaaxir* or *fil-ʔaaxir* in the end, finally. *min il-ʔawwil lil-ʔaaxir* from first to last. *ʔaaxir in-nahaar* (at) the end of the day. *bet-na f-ʔaaxir if-ʃaariʕ* our house is at the end of the street. *min ʔaaxir id-dunya* from the ends of the earth. *ʕala ʔaaxir iz-zaman* see *zaman*. *ʔawaaxir iṣ-ṣeef* the latter parts of the summer. - *ʔawaaxir* occurs adjectivally in such phrases as *fil-ʕaʃart iyyaam il-ʔawaaxir min ramaḍaan* in the last ten days of Ramadan.

¶ *ʔila ʔaxr-u* et cetera.

آخرة ʔaaxira↑ see *ʔaxra* 2.

آخرة ʔaxra /n/ **1** /only in constr/ the end of, the outcome of. *ʔaadi ʔaxrit-ha* this is the upshot! *ʔaxrit-u kaanit wiḥʃa* he came to a sticky end. *ʔaxrit-ak sooda* ≈ go to hell! ‖ *ʔaxrit-ha* to cut a long story short. **2** *ʔil-ʔaxra* (also *ʔil-ʔaaxira)* the hereafter, the life after death. **3** *[abus]* face. *ʔamma ʕalee ʔaxra* what an ugly mug he has!

آخراني ʔaxraani /adj */ final, last. *fiṣ-ṣuhuur il-ʔaxraniyya g-ganiin bi-yibqa tqiil* in the last months the foetus grows heavy.

وخرى waxri /adv/ late, behind time. *bi-tiṣḥa waxri* she's a late riser. *ʔil-waqt*^{i} *waxri* it's late in the day.

راخر raaxar /fem *ruxra,* pl *ruxriin*/ adjective used in apposition as an equivalent of the English 'too', 'also' etc. *ʔana raaxar ma-nimt*^{i}*-ʃ* I didn't sleep either. *ʔil-baṭaaṭis ʕayzà laḥma ʔaktar wil-makaroona ruxra* the potatoes need more meat and so does the pasta. *ʔin-naas kitrit wil-ʔasʕaar ruxra rtafaʕit* the population has increased and prices have risen in turn. ‖ *ya-xii-na nta raaxar* ≈ come off it!

أخّر ʔaxxar /vt/ **1** to make late, delay. *ʔaxxart*^{i} *safar-i* I delayed my departure. *ʔaxxar saʕt-ak saaʕa waḥda* put your watch back one hour. **2a** to cause to move back. *ʔaxxar il-ʕarabiyya l-waṛa* move the car back. ‖ *miʃyit tiqaddim rigl*^{i} *wi-tʃaxxar it-tanya* she walked haltingly or hesitantly. **2b** to cause to regress, cause to deteriorate. *ʔil-ḥarb*^{i} *ʔaxxarit il-balad* the war put the country back. ‖ *maʕrift-u tʃaxxar* it is a disadvantage to know him. — /vi/ **3** to lose time, become slow (of a watch). *ʔis-saaʕa ʔaxxarit xamas daqaayiq* the watch has lost five minutes. **4** to move back. *ʔaxxar fiwayya* go back a little. - vn *taʃxiir*; ava *miʃaxxar*.

تأخيرة taʃxiira /n pl *-aat*/ delay. *kull*^{i} *taʃxiira w-fiiha xeera [prov]* every delay contains (some) benefit.

مؤخّر muʃaxxar /n/ that part of a payment due only after certain conditions have been met (notably that portion of a woman's marriage settlement that she may claim under Muslim law if divorced or widowed).

مؤخّرة muʃaxxira↑ /n/ back part, rear.

اتأخّر ʔitʃaxxar /vi/ **1** to be late. *ʔil-qaṭr itʃaxxar in-nahar-da* the train was late today. *ma-titʃaxxaruu-ʃ ʕan il-madrasa* don't be late for school! *ʔitʃaxxar fid-dafʕ* he got into arrears. **2a** to go back, retreat. *ʔitʃaxxar fiwayya ʕan if-fibbaak* move back from the window a little! **2b** to regress, deteriorate. *ḥalt-u tʃaxxarit* his condition has deteriorated. - vn *taʃxiir*; ava *mitʃaxxar*.

متأخّر *mitʃaxxar = muʃaxxar.*

ءخز see ءخد: *ʔaaxiz, muʃaxza, ʔittaxaz↑*

ء خ ص

إخص ʕixṣ 1 /interj/ shame! ʕixṣ ᵊ ɛaleek shame on you! fie on you! 2 /n/: *buuz il-ʕixṣ, wiff il-ʕixṣ* and *ʃakl il-ʕixṣ* one who brings bad luck, ill-omened person.

إخصيه، إخصّى ʕixṣiih, ʕixṣiyy /interj/ shame (on you)! fie (on you)!.

ء خ ط ب –

أخطبوط ʕuxṭubuuṭ, ʕaxṭabuuṭ /n pl *-aat*/ octopus.

ء خ و see ء خ خ: ʕaxu, ʕixwaat, ʕixwaan, ʕixwangi, ʕaxawi, ʕuxuwwa

ء د ا م [1]

آدام ʕadaam[1] /n/ *[Chr]* tune used at vespers and matins, Sunday to Tuesday.

ء د ا م [2] see م د ا م [2]: ʕadaam[2]

ء د ء see ء ذ ى [1]: ʕadaaʃ

ء د ب

أدب ʕadab /n/ 1 good manners, politeness. *ma-fii-ʃ ɛandak ʕadab* have you no manners? *sitt[i] ṣaḥbit ʕadab wi-kamaal* a lady of impeccable manners. *ɛaliil il-ʕadab* ill-mannered. *ʕil-ʕadab faḍḍal-u ɛal-ɛilm [prov]* good manners are to be preferred to learning. ‖*maḥall il-ʕadab* or *beet il-ʕadab* lavatory. 2 /pl *ʕadaab*/ letters, literature. *ʕil-ʕadab il-ɛarabi* Arabic literature. ‖*ʕil-ʕadab il-makʃuuf* literary works which talk openly about sex. - *ʕil-ʕadab iʃ-ʃaɛbi* folk literature. – *ʕadaab* /pl n/ 3 formal etiquette. *ʕadaab il-ḥadiis* the etiquette of conversation. 4 morals, morality. ‖*buliiṣ il-ʕadaab* the vice squad. 5 *ʕil-ʕadaab* the arts, the humanities. *kulliyyit il-ʕadaab* the Faculty of Arts.

أدبي ʕadabi /adj */ 1 pertaining to literature. *naqd[i] ʕadabi* literary criticism. 2 pertaining to the arts or humanities. *ʕil-qism il-ʕadabi* the Arts Department (e.g., of a secondary school).

أديخانة ʕadabxaana /n pl *-aat*/ *[obsol]* lavatory.

أدباتي ʕudabaati /n pl *-yya*/ *[obsol]* professional improviser of rhymes. ‖*ɛaamil zayy il-ʕudabaati* clowning about.

أديب ʕadiib[ʔ] /n pl ʕudabaaʃ/ litterateur, man of letters.

أدّب ʕaddib /vt/ to discipline, teach manners to. *ʕaddib ʕawlaad-ak* teach your children some manners! - vn *taʕdiib*; ava *miʕaddib*; pva *muʕaddab*.

تأديب taʕdiib /vn/ ‖*maglis taʕdiib* disciplinary board.

تأديبي taʕdiibi /adj/ disciplinary. ‖*ɣaara taʕdibiyya* retaliatory raid.

مؤدّب muʕaddab /adj */ well-mannered, polite. *ʕuqɛud muʕaddab ya walad* sit quietly, boy, and behave yourself!

اتأدّب ʕitʕaddib /vi/ 1 to be disciplined, be taught manners. 2 to behave politely, show manners. *laazim titʕaddib fi-kalaam-ak* you must speak politely. - ava/iva *mitʕaddib*.

ء د د ل –

إدّلعدي ʕiddalɛadi[ɻ] *[women in trad soc]* term of address or reference (used particularly in contexts of warding off evil).

ء د ر ج –

إدروجين ʕidrujiin <Fr> /n/ hydrogen.

ء د م [1]

آدم ʕaadim /vi/ to eat carefully in small mouthfuls. *ʕaadim fi-ʕakl-ak* eat little by little. - vn *miʕadma*; ava *miʕaadim*.

إدام ʕidaam /n/ 1 juices of cooked meat, gravy (consumed by dipping with bread). 2 *[rur]* oil, fat.

ء د م [2] see ء ا د م: ʕaadam, ʕaadami, ʕaadamiyya

ء د م [3] see م د ا م [2]: ʕadaam[2]

ء د ن see ء ز ن [1]: ʕadaan[1], *madna*, ʕaddin

ء د ه م

أدهم ʕadham male given name. *ʕadham iʃ-ʃarqaawi* historical character celebrated in popular songs and literature for his resistance to Turkish tyranny.

ء د و د

أدود ʕadwad <Copt> /n/ effeminate man, catamite.

ء د ي [1]

أداة ʕadaah /fem n, pl *ʕadawaat*/ instrument, piece of equipment. *ʕig-geeʃ mugarrad ʕadaah fi-ʕiid iʃ-ʃaɛb* the army is merely a tool in the hands of the people. *ʕadawaat ṣiḥḥiyya* sanitary appliances. *ʕadawaat maktabiyya* stationery.

أدّى ʕadda 1 /vt/ 1a to carry out, perform. *ma-bi-yʕaddii-ʃ waẓift-u maẓbuuṭ* it doesn't perform its function properly. 1b to give a performance of, give a rendition of. 2 /vi/ to lead, be conducive. *ʕil-ʕasbaab illi*

bi-tʕaddi l-inxifaaḍ il-mabiɛaat the reasons leading to a drop in sales. - vn *ʕadaaʕ, taʕdiyya, taʕdiya*; ava *miʕaddi, muʕaddi*.
أداء *ʕadaaʕ* /n/ performance, rendering. *ʕil-mumassiliin ʕaddu ʕadaaʕ mumtaaz* the actors gave a fine performance.
مؤدّى *muʕaddi* /n */ performer.

ء د ي [2]
إدّى *ʕidda (yiddi)* <Copt> /vt/ **1** to give, provide (with). *ma-dda-nii-ʃ furṣa* he didn't give me an opportunity. *ʕidda l-ɛagala zeet* he oiled the wheel. *rabb-i-na yiddii-k iṣ-ṣiḥḥa* may our Lord give you health. ‖ *ʕilli ddaa-k yiddii-na [prov]* (He who gave to you will give to us too) ≈ don't imagine that you are the only recipient of God's favours, don't be too proud in your own good fortune. - *yaaxud wi-yiddi* see *ʕaxad*. - *ʕidda ʃabah li-* ... to look like ..., resemble .... **2a** to hand, pass. *ʕiddii-ni k-kitaab da* hand me that book! **2b** *[soccer]* to pass (the ball). **3** to yield, emit, produce. *ʕil-ʁeeṭ ʕidda maḥṣuul ʕakbar* the field produced a larger yield. *ʕiṭ-ṭabla b-tiddi ṣoot ḥilw* the drum makes a nice sound. **4** to subject to action (usually vigorous) by means of (s.th.). *ʕiddaa-ni dmaaʁ* he butted me with his head. *ʕiddaa-ni kalaks* he honked his horn at me. *ʕidda l-koora fig-goon* he slammed the ball into the goal. - vn *middiyya*; ava *middi*.

ء د ي [3] see ء ا د ي: *ʕaadi, ʕadii-*

ء د ي ل –
إيديولوجي *ʕidyulooji* <perh Fr> /adj/ ideological.
إيديولوجيّة *ʕidyulojiyya* /n pl *-aat*/ ideology.

ء ذ ا see ء ز ا

ء ذ ن see ء ز ن [1]

ء ذ ى see ء ز ى

ء ر ا ن س
أورانس *ʕuraanus* <perh Fr> /prop n/ Uranus.

ء ر ء
أرّأ *ʕarraʕ* /vi/ to mock, laugh (at). *dayman yiʕarraʕ ɛala kull[a] ḥaaga b-sabab wi-min ʁeer sabab* he always ridicules everything, whether there is reason for it or not. - vn *taʕriiʕ*; ava *miʕarraʕ*.

ء ر ب
أروبة *ʕaruuba* /fem adj/ possessed of a malevolent cunning (of a woman). *ya ʕaruuba ya ɛaguuza* you old witch!

ء ر ب –
أوربّا *ʕurubba* /prop n/ Europe.
أوربّي *ʕurubbi* /adj */ European.
أوربّاوى *ʕurubbaawi↓* /adj */ *[deris]* aping European ways.

ء ر ب س ك
أرابيسك *ʕarabisk* <perh Fr> **1** /coll n/ arabesque(s). **2** /adj invar/ arabesque.

ء ر ب ع see ر ب ع: *ʕarbaɛ, ʕarbaɛa, ʕarbaɛtaaʃar, ʕarbiɛiin*

ء ر ت د –
أرثوذكسي *ʕurtuduksi, ʕartuduksi, ʕursuzuksi, ʕarsuzuksi* <Gr *orthodoksos*> /pl *ʕurtuduks, ʕartuduks, ʕursuzuks, ʕarsuzuks*/ *[Chr]* **1** /adj/ pertaining to the Orthodox churches. **2** /n/ Orthodox Christian.
أرثوذكسيّة *ʕurtuduksiyya, ʕursuzuksiyya* /n/ *[Chr]* Orthodoxy.

ء ر ت ش –
أرتشوه *ʕartiʃuuh* <Fr *artichaut*> /n pl *-aat*/ small hairpiece with either short or long hair.

ء ر ت ك –
أرتيكاريا *ʕartikarya* <Engl> /n/ *[path]* urticaria, a temporary rash characterized by red patches and itching and caused by certain allergies. ‖ *bi-yiɛmil-li ʕartikarya* he gives me the creeps.

(ء ر ت و –)
إرتواز *ʕirtiwaaz* <Fr *ardoise*> **1** /n/ slate. **2** /adj invar/ made of slate. - also *ʕirdiwaaz*.
إرتوازى *ʕirtiwaazi* <perh Fr *Artois*> /adj/ artesian. *ʕabaar ʕirtiwaziyya↑* artesian wells. ‖ *mayya ʕirtiwaazi* well-water (i.e., not from the Nile or a canal). - also *ʕirdiwaazi*.

ء ر ث ذ – see ء ر ت د –

ء ر ج
أرج *ʕurg* <Fr *orgue*> /n/ electric organ.

ء ر ج ر –
إيروجرام *ʕirugraam* <Fr *aérogramme*> /n pl *-aat*/ air letter.

ء ر ج ن ز
أورجانزا ʕurganza <Engl> /n/ organza.

ء ر ج ن –
أوريجينال ʕurijinaal <Fr *original*> **1** /n pl *-aat*/ *[print]* matrix. **2** /adj invar/ classy, swank.

ء ر ج و ز see ق ر ج و ز: *ʕaragooz*

ء ر خ
أرّخ *ʕarrax, ʕarrax* **1** /vt/ to put a date on. *ʕarrax ig-gawaab bi-tariix in-nahar-da* he dated the letter with today's date. **2** /vi/ to write a chronicle or history. *bi-yʕarrax lil-ħarb* he's writing a history of the war. - vn *taʕriix*; ava/pva *miʕarrax, miʕarrax*.
تاريخ *tariix* /n/ **1** /pl *tawariix*/ date. **2** /no pl/ history, chronicle. *tariix maṣr* the history of Egypt. *tariix ħayaat-u* the story of his life. see further under ت ر خ
تاريخى *tariixi* /adj/ **1** pertaining to history, historical. **2** chronological. **3** historic.

ء ر خ ن
أرخن *ʕurxun, ʕarxun* <Gr *arkhôn*> /n pl *ʕaraxna*/ *[Chr]* leading layman in church affairs.

ء ر د ا ن
أردان *ʕurdaan* <prop n *Jordan*> /n/ *[Chr]* baptismal font. - also *ʕil-ʕurdun*.

ء ر د ب
أردبّ *ʕardabb* <Copt> /n pl *ʕaraadib, ʕaradibb*/ dry measure of 198 litres, ardeb. *ʕiħḍar ʕardabb-ak yiziid [prov]* ≈ look to your own affairs and they will prosper. *ʕardabb[i] ma-huu-lak ma-tiħḍar keel-u tiʕaffar daqn-ak wi-titʕab fi-feel-u [prov]* don't attend the measuring of somebody else's ardeb for your beard will get dusty and the load will tire you ≈ mind your own business.

ء ر د ر
أردر، أوردر *ʕurdar* <Engl> /n pl *-aat*/ work-order. *ʕibʕat ʕurdar lil-warʃa ʕaʃaan ʕurfuf* send an order to the workshop for shelves.

ء ر د ن
الأردن *ʕil-ʕurdun* (also *ʕil-ʕurdunn↑*) **1** /prop n/ Jordan. *nahr il-ʕurdun* the river Jordan. **2** /n/ *[Chr]* baptismal font. - also *ʕurdaan*.
أردنى *ʕurduni* (also *ʕurdunni↑*) **1** /adj */ Jordanian. **2** /n */ a Jordanian.

(ء ر د و –)
إردواز *ʕirdiwaaz* <Fr *ardoise*> **1** /n/ slate. **2** /adj invar/ made of slate. - also *ʕirtiwaaz*.
إردوازى *ʕirdiwaazi* <perh Fr *Artois*> /adj/ artesian. *ʕabaar ʕirdiwaziyya↑* artesian wells. ‖ *mayya ʕirdiwaazi* well-water (i.e., water not from the Nile or a canal). - also *ʕirtiwaazi*.

ء ر د ى –
أوردِيفر *ʕurdeevar* <Fr> /n/ hors d'oeuvre.

ء ر ر
إرّ *ʕirr* /interj/ sound made to attract the attention of, or shoo away, sheep.

ء ر س see و ر س: *ʕiris, ʕaras, ʕirs, ʕariis, ʕarras, ʕitʕarris, ʕitʕaaris*

ء ر س ز – see ء ر ت د –: *ʕursuzuksi, ʕarsuzuksi, ʕursuzuksiyya*

ء ر ش م –
أرشمندريت *ʕarʃimìnidriit* <Gr *ʾarkhimandritês*> /n pl *ʕarʃiminidritiyya/ [Chr]* archimandrite.

ء ر ش ى ف
أرشيف *ʕarʃiif, ʕarʃiif* <Fr *archives*> /n pl *-aat, ʕaraʃiif, ʕaraʃiif*/ **1** archive. **2** filing cabinet.

ء ر ض
أرض *ʕarḍ* /fem n/ **1** earth, soil. *ʕarḍ[i] ramliyya* sandy soil. **2a** ground, surface of the earth. *ʕil-ʕaṣafiir bi-tḥuṭṭ[a] ʕala l-ʕarḍ* the birds alight on the ground. *nifs-i l-ʕarḍ[i] tinfaqq[i] w-tiblaʕ-ni* I wish the earth would open and swallow me up. ‖ *ʕil-ʕarḍ[i] tiṣbaḥ sama* the world will be turned upside down. - *law ma-ʕalit-ak-ʃ il-ʕarḍ[i] ni̇ʃiil-ak ʕala ras-na* ≈ we'd do anything for you. - *taḥt il-ʕarḍ* high and low, as in *dawwar ʕaleeha taḥt il-ʕarḍ* look for her everywhere, look for her high and low. - *min taḥt il-ʕarḍ* (1) sparing no effort, going to any lengths, as in *hat-ha min taḥt (ṭaqaṭiiq) il-ʕarḍ* bring her, regardless of effort. (2) with the greatest of difficulty, as in *gibt il-filuus di min taḥt il-ʕarḍ* I brought this money after a great deal of trouble. - *ma-yinzil-ʃ il-ʕarḍ* it never fails, as in *kilmit-u ma-tinzil-ʃ il-ʕarḍ* you may rely on his word, *daʕwit-u ma-tinzil-ʃ il-ʕarḍ* his prayer is always answered. - *ḥ-axsif biiku l-ʕarḍ* I'll show you! - *ʕil-ʕarḍ iṭ-ṭahra* the holy places in the Hijaz. - *gab manaxiir-u* (or *dimaax-u*) *l-ʕarḍ* he forced him to give in. - *ʕaadi s-sama w-ʕaadi l-ʕarḍ* I have absolutely no-

thing. - *ʕibn il-ʕarḍ* native, especially with reference to the *fallaḥiin*. **2b** floor. *ʕarḍ^{i} xaʃab* a wooden floor. *ḥ-amsaḥ biih il-ʕarḍ* I'll wipe the floor with him! **2c** surface of a card table or gaming table. *ʕil-waraq illi ʃil-ʕarḍ* the cards which are on the table. **3** *ʕil-ʕarḍ* the Earth, the terrestrial sphere. *ʕarḍ allaah wasʕa [prov]* ≈ there's plenty of opportunity elsewhere. *bi-yquul ya ʕarḍ^{i} ithaddi ma-ʕaleeki qadd-i* he says, 'be calm, Earth, there is none on you but I!' (of a very conceited person). — /pl *ʕaraaḍi*/ **4** land, landed property. *ʕandi ḥittit ʕarḍ^{i} gamb iskindiriyya* I have a piece of land near Alexandria. ‖*feen ʕaraḍii* where on earth is he now? what are his whereabouts?

أرضى *ʕarḍi* /adj/ **1** pertaining to the ground or floor. *ʕid-door il-ʕarḍi* the ground floor. **2** terrestrial, earthly. *ʕil-kura l-ʕarḍiyya* the terrestrial sphere. -/n/ **3** *[elec]* earth.

أرضيّة *ʕarḍiyya* /n pl *-aat*/ **1** floor, flooring, prepared surface. *ʕarḍiyya musallaḥa* reinforced floor. *ʕarḍiyyit iʃ-ʃaariʕ* the road surface. **2** background. *ward^{a} ʕaḥmar ʕala ʕarḍiyya zarqa* red roses on a blue background. **3** storage charge, demurrage.

أرض *ʕaraḍ* /coll n/ termite(s).

أرضة *ʕaraḍa* /unit n, pl *-aat*/ a termite.

مأروض *maʕruuḍ* /adj/ **1** underweight, thin and small (as a result of supposed demonic possession). **2** possessed by an evil spirit from the nether world (believed to live underground).

اتأرض *ʔitʕaraḍ* /vt/ **1** to become thin and weak (as a result of supposed demonic influence). **2** to be possessed by an evil spirit. - ava/iva *mitʕiriḍ*.

ء ر ط

أورطة *ʕurṭa* <T *orta*> /n pl *ʕuraṭ, ʕurṭaat*/ **1** *[mil, obsol]* battalion. **2** large group, bunch. *miḥammad wi-zaki w-ʕali - ʃil-ʕurṭa kull-a-ha xaragit* Muhammad and Zaki and Ali - the whole bunch of them went out. *ʕandu ʕurṭit ʕiyaal* he has a lot of children.

ء ر غ ا ط

أرغاطة *ʕurɤaaṭa* <T *ırgat* from Gr> /n pl *ʕaraɤiiṭ*/ windlass, winch, capstan.

ء ر غ ن

أرغن *ʕurɤun* <Engl> /n pl *-aat*/ (church) organ.

ء ر غ و ل

أرغول *ʕarɤuul, ʕurɤuulʔ* /n pl *ʕaraɤiil*/ musical instrument of the *muzmaar* (q.v.) family, consisting of two pipes, one a drone and the other a melody pipe (see Pl.J, 16).

ء ر ف و –

أورفوار *ʕuruvwaar* <Fr> /interj/ au revoir! bye-bye!

ء ر ق

أرق *ʕaraqʔ* /n/ insomnia.

(ء ر ك)

أرك *ʕark* <perh Fr *arc*> /n pl *-aat*/ arc lamp.

أراك *ʕaraak* /n/ tooth-brush tree (Salvadora pesica).

ء ر ك س –

أركسترا *ʕurkistira* <Engl> /n pl *-aat*/ **1** orchestra. **2** dance-band.

ء ر ل ك –

أرلكان *ʕarlikaan* <Fr *arlequin*> /n/ type of hairstyle.

(ء ر م)

أرمة *ʕurma* /n/ *[abus]* lineage. *laʕant-i-lu ʃabu ʕurmit gidd-u* I cursed all his bloody ancestors.

أرمة *ʕarma* <It *armare*> /n/ *[naut]* rigging. *ʕamal il-ʕarma* to ready a ship for sea, fit out a ship.

ء ر م س see ء ر م و س: *ʕarmuus*

ء ر م ل [1] see ر م ل [2]: *ʕarmila*

ء ر م ل [2] see ء ر م ن: *ʕarmalli*

ء ر م م – see ء ر م ن ت: *ʕarmamant*

ء ر م ن

أرمنى *ʕarmanni* (also *ʕarmalli, ʕarmanli*) /pl *ʕarman, ʕarmal, ʕarmanniyya, ʕarmalliyya, ʕarmanliyya, ʕarmanniyyiin, ʕarmalliyyiin, ʕarmanliyyiin*/ **1** /adj/ Armenian. **2** /n/ an Armenian.

ء ر م ن ت

أرمنت *ʕarmant* /prop n/ Armant, a town twelve miles south-west of Luxor. ‖*kalb^{i} ʕarmant* (also *kalb^{i} ʕarmamant*) breed of strong big dog, (loosely) any pedigree dog.

ء ر م و س

أرموس *ʕarmuus* <Gr *armos*> /n pl *ʕaramiis*/ seam, join (e.g., between bricks, planks, parts of a sail). - also *ʕarnuus, ʕarmuus*.

ءرنء–
أرناؤوطي ʕarnaʕuuṭi, ʕarnaʕooṭi **1** /adj/ Albanian. ‖*filfil ʕarnaʕuuṭi* paprika. **2** /n pl *ʕarnaʕuuṭ, ʕarnaʕooṭ*/ an Albanian.

ءرنب
أرنب ʕarnab /n pl *ʕaraanib, ʕanaarib*↓/ **1** rabbit. *bi-yiwlidu zayy il-ʕaraanib* they breed like rabbits. ‖*baqu zayy il-ʕaraanib* they were cowed. **2** *[slang]* a million Egyptian pounds.
أرنبة ʕarnaba /n pl *-aat*/ **1** doe rabbit. *zayy il-ʕarnaba tiwlid kull*^{i} *ʃahreen marra [prov]* ≈ she breeds like a rabbit. **2** (loosely) = *ʕarnab*. **3** *ʕarnabit il-manaxiir* the tip of the nose.
أرنوب ʕarnuub /n/ *[children]* rabbit, bunny.
أرنب ʕarnib **1** /vt/ to cause to cower (like a rabbit). **2** /vi/ to cower (like a rabbit). -vn *ʕarnaba*; ava/pva *miʕarnib*.

ءرنس
الأرنس ʔil-ʕurnus /n/ *[obsol]* the supply corps of the British Army.

ءرنيك
أورنيك ʕurneek <T *örnek*> /n pl *ʕaraniik*/ **1** printed form, blank form. ‖*ʕurneek zanb [mil]* punishment. **2** (dress) pattern. **3** *[print]* matrix. **4** *[eng]* template.

ءرو
آرو ʕarw (also *ɡarw*) <Copt> /n/ *[bot]* oak.

ءرول
أرولة ʕarawla /n/ chrysanthemum.

ءري^{1}
أريا ʕarya^{1} <Engl> /n/ *[soccer]* goal area. *xaṭṭ il-ʕarya* the line demarcating the goal area.

ءري^{2}
أريا ʕarya^{2} /n pl *ʕaraaya*/ *[naut]* yard of a lateen sail.
آريا ʕarya^{3} <It *aria*> /interj/ *[naut]* lower away!

ءريل
إريل ʔiryal (also *ʔiryil, ʕaryal*) <Engl> /n pl *-aat, ʕaraayil*/ aerial, antenna.

ءريير
أرير ʕaryeer <Fr *arrière*>: *marʃ aryeer [auto]* reverse.

ءزا
إزا، إذا ʔiza /conj/ **1** if. *ʔiza ʔiḫna ma-ʃtarenaa-ʃ ʏer-na ḫa-yiʃtiri* if we don't buy, others will. **2** whether. *ʔis ʕal-u ʔiza kaan maɛaa samak* ask him whether he has (any) fish.

ءزبر–
أزبراتير ʕazbarateer <Fr *aspirateur*> /n pl *-aat*/ *[auto]* distributor, - also *ʕasbirateer*.

ءزبس–
أزبستوس ʕazbistus <Engl> /n/ asbestos. - also *ʕasbistus*.

ءزبك
الأزبكيّة ʔil-ʕazbakiyya /prop n/ a public garden in central Cairo, and the area surrounding it. *suur il-ʕazbakiyya* the wall of Ezbekiya garden on the Opera Square side, famous for its second-hand book stalls.

ءزتت
أزوتّ ʕazutt <Fr> /n/ *[obsol]* azote, nitrogen.
أزوتيك ʕazutiik <Fr *azotique*>: *ḥaamiḍ il-ʕazutiik* nitric acid.

ءزر
إزار ʔizaar$^{\uparrow}$ /n/ **1** /pl *ʔuzur, ʔizaraat*/ long wrapper, loin cloth (used particularly during the pilgrimage to Mecca). **2** /pl *-aat*/ any structural device which goes all round a room (e.g., skirting-board, decorative groove between wall surface and ceiling surface).

ءزري ط
الأزاريطة ʔil-ʕazariiṭa /prop n/ a district in Alexandria.

ءزريه
أزوريه ʕazureeh <Fr *ajouré*> /adj invar/ perforated. - also *ʕajureeh*.

ءزاي see also ءززيي and زيي
إزّاي ʔizzaay /adv/ **1** how, in what way. *ʕasaɡd-ak ʔizzaay* how can I help you? *ɡult-i-lu yiɛmil-u zzaay* I told him how to do it. **2** how, to what degree. *fuufi ʕana faṭra ʔizzaay* look how clever I am!

ءزير see also قصدير
أزّير ʕazziir /n/ **1** soldering alloy. **2** tinning (for copper pots).

ء ز ز ى see also ء ز ز ا ى and ز ى ى
إزّى *ʕizzayy* /interrog adv, always w pron suff or foll n/ how is ..? how are ..? *ʕizzayy-ak* how are you? *ʕizzayy il-ʕawlaad* how are the children? *ʕizzayy il-ḫaal* how are things? *ʕizzayy iskindiriyya ɛala ḫiss-ak* how do you (or: did you) find Alexandria?

ء ز ع ر see [1] ز ع ر : *ʕazɛar*[2], *ʕitʕazɛar*

ء ز ع ر –
أزعرينا *ʕazɛariina* /n/ fuss. *ɛaamil ʕazɛariina ɛal-faaḍi* he is making a fuss about nothing.

ء ز ق
مأزق *maʕzaq*↑ /n pl *maʕaaziq*/ tight corner, tough spot.

ء ز ل
أزل *ʕazal* /n/ eternity. - common only in the phrases: *da ʕazal* that was very long ago. *min qadiim il-ʕazal* since the beginning of time, from time immemorial.
أزلى *ʕazali* /adj/ **1** eternal. ‖ *da miʃ qillit baxt*[i] *bass - da faqr*[i] *ʕazali kamaan* it's not just bad luck - it's hopeless poverty. **2** extremely old, as old as Methuselah.

[1] ء ز م
أزم *ʕazam (i)* /vt/ to put (s.o.) in a fix. *ʕaqsaaṭ it-tallaaga ʕazamit-ni xaaliṣ* (paying off the) fridge instalments left me really short of money. - ava *ʕaazim*; pva *maʕzuum*.
أزمة *ʕazma*[1] /n pl *-aat*/ **1** crisis. *ʕazmit il-ʕaxlaaq* the crisis in morals. ‖ *ʕiʃtaddi ya ʕazma titḫalli [prov]* (worsen, crisis, that you may be relieved) ≈ it's darkest before the dawn. **2** shortage. *ʕazmit it-taksiyaat* the acute shortage of taxis. **3a** crisis period (of an illness). **3b** attack (of an illness). *gaa-lu l-ʕazma btaɛt-u* he had one of his attacks.
اتأزم *ʕitʕazam* /vi/ to be put in a fix. - iva *mitʕizim*.
أزّم *ʕazzim* **1** /vt/ to upset (s.o.). — /vi/ **2** to become unavailable or in short supply (of goods etc.). **3** to become critical or complicated. *ʕil-ḫaala f-libnaan ʕazzimit xaaliṣ* the situation in Lebanon became critical. - vn *taʕziim*; ava *miʕazzim*.
اتأزّم *ʕitʕazzim* /vi/ **1** to be upset, be annoyed. **2** to become unavailable or in short supply (of goods). - ava/iva *mitʕazzim*.

[2] ء ز م
أزمة *ʕazma*[2] <Engl> /n/ asthma.

[1] ء ز م ى ر
إزمير *ʕazmiir*[1] /prop n/ Izmir (in Turkey).
أزميرلى *ʕazmirli* /adj/ pertaining to Izmir. *ɛinab ʕazmirli* Smyrna grapes.

[2] ء ز م ى ر
أزمير *ʕazmiir*[2] <Gr *smilê*> /n pl *ʕazamiir*/ chisel. - also *ʕazmiil*.

ء ز م ى ل
أزميل *ʕazmiil* <Gr *smilê*> /n pl *ʕazamiil*/ chisel. - also *ʕazmiir*.

[1] ء ز ن
أذن *ʕazan, ʕizin (a, i)* /vi/ to grant permission. *lamma yiʕzin rabb-i-na* when God wills. - vn *ʕizn*; ava *ʕaazin*; pva *maʕzuun*.
إذن *ʕizn* /n/ **1** /no pl/ permission. *ɛan* (or *baɛd*[i]) *ʕizn-ak* by your leave, excuse me. *bi-zn illaah* God willing. **2** /pl *ʕuzuun, ʕuzunaat*/ warrant, permit. *ʕizn*[i] *taftiiʃ* search warrant. *ʕizn*[i] *taṣdiir* export licence. ‖ *ʕizn*[i] *bariid* postal order. - *ʕizn*[i] *maṣrafi* bank deposit slip.
مأذون *maʕzuun* /n pl *maʕaziin*/ official authorized to perform Muslim marriages.
مأذونيّة *maʕzuniyya* /n/ the office of a *maʕzuun*.
أذان، أدان *ʕadaan*[1] /n pl *-aat*/ *[Isl]* call to prayer. ‖ *yiṣḫa min il-ʕadaan* ≈ he is awake from the crack of dawn. - *kull*[i] *waqt*[i] *w-luu ʕadaan [prov]* ≈ everything in its own time.
مأذنة، مدنة *madna* /n pl *midan*/ **1** minaret. **2** *[Isl]* bead forming the junction on a string of prayer beads.
أذّن، أدّن *ʕaddin, ʕiddan (yiddan)* /vt/ **1** *[Isl]* to call (a prayer). *ʕaddin il-ɛaṣr* he called the afternoon prayer. — /vi/ **2** *[Isl]* to give the call to prayer. ‖ *bi-yiddan fi-malṭa [prov]* (he gives the call to prayer in Malta) ≈ he's flogging a dead horse. **3** *[Isl]* to become due (of prayer). *ʕil-ɛaṣr iddan* it is time for the afternoon prayer to be called. **4** to crow (of a cock). - vn *taʕdiin*; ava/pva *miʕaddin, middan*.
مؤذّن *muʕazzin* /n */ muezzin.
استأذن *ʕistaʕzin* /vt and vi/ **1** to ask permission (of). *ʕistaʕzint in-naaẓir* (or *min in-naaẓir*) have you asked the headmaster's permission? **2** to take one's leave (of). *ʕastaʕzin-kum* (or *ʕastaʕzin*) *baqa* I must be going then. - vn *ʕistiʕzaan*; ava *mistaʕzin*.

[2] ء ز ن see و د ن : *ʕuzn*

ء ز و ز
أزوزة *ʕazuuza* <Gr *gazoza*> /n/ *[non- Cairene]* pop, carbonated soft drink. - also *gazuuza, kazuuza*.

ء ز ى
أذى ʕaza[1] *(i)* /vt/ to harm. ‖ *ʕallaah yiʕzii-k* ≈ may you suffer for the sufferings you've caused to others (used as a mild rebuke). - vn *ʕaza, ʕaziyya*; ava *ʕaazi*; pva *maʕzi*.
أذى ʕaza[2] /n/ skin disease, specifically ringworm. *bi-yitʕaalig min il-ʕaza lli f-raas-u* he is being treated for ringworm.
أذيّة ʕaziyya /vn/ ‖ *wiff[i] ʕaziyya* one who brings harm to others (e.g., by tale-bearing, malicious gossip, or by being tyrannical or quick to punish).
مؤذى *muʕzi* /adj */ harmful.
اتأذى *itʕaza* /vi/ to be harmed, be injured. - iva *mitʕizi*.
اتأذّى *itʕazza* /vi/ to be upset, be worried. - iva *mitʕazzi*.

ء ز ى ء see ز ى ى : *ʕazyaaʕ*

ء س
إس *ʕis* <Copt> /interj/ behold!

ء س ا see ء س ى : *ʕasa*

ء س ب ا ت
إسباتى *ʕisbaati* <It *spade*> /coll n/ spade(s) (in cards). ‖ *raaḥ fi-sabʕa ʕisbaati* he fell into a deep sleep.

ء س ب ا ن see ء س ب ن – : *ʕisbaani*

ء س ب ا –
إسباتس *ʕisbaatis* /prop n/ popular carbonated soft drink.

ء س ب ت –
إسبتلية *ʕisbitalya* <T *ispitalya* from It> /n pl *-aat*/ hospital. *ʕil-ʕisbitalya ṣ-ṣadriyya* the hospital for chest diseases. - also *ʕistibalya*↓.

ء س ب ج –
إسباجيتى *ʕisbagitti* <It> /n/ spaghetti. - also *ʕisbakitti*.
إسباجيتينى *ʕisbagittiini* <It> /n/ spaghettini. - also *ʕisbakittiini*.

(ء س ب د –)
إسبداج *ʕisbidaag* <P *safedâj*> /n/ white lead, ceruse. - also *sibidaag*.
إسباديقون *ʕisbadiquun* <Gr *despodikon*> /n/ *[Chr]* central square of the impression with which a eucharistic loaf (*qurbaan*) is stamped.

ء س ب ر – [1]
أسبرين *ʕasbiriin, ʕisbiriin* <Engl> /n/ aspirin.
أسبرينة *ʕasbiriina, ʕisbiriina* /unit n, pl *-aat*/ an aspirin tablet.
أسبرينايّة *ʕasbirinaaya, ʕisbirinaaya* = *ʕasbiriina*.

(ء س ب ر –) [2]
أسبراتير *ʕasbirateer* <Fr *aspirateur*> /n pl *-aat*/ *[auto]* distributor. - also *ʕazbarateer*.
إسبريه *ʕisbireeh* <Engl> /n/ spray (usually hair-spray).

ء س ب س –
أسبيستوس *ʕasbistus* <Engl> /n/ asbestos. - also *ʕazbistus*.

ء س ب ك –
إسباكيتّى *ʕisbakitti* <It> /n/ spaghetti. - also *ʕisbagitti*.
إسباكيتينى *ʕisbakittiini* <It> /n/ spaghettini. - also *ʕisbagittini*.

ء س ب ل
إسبلايت *ʕisbilaayit* <T *ispalet*> **1** /coll n/ epaulette(s). **2** /n pl *-aat*/ epaulette.

ء س ب ن –
إسبانيا *ʕisbanya* or *ʕasbanya* /prop n/ Spain.
إسبانى *ʕisbaani* or *ʕasbaani* **1** /adj/ Spanish. – /n/ **2** /pl *ʕisbaniyyiin, ʕasbaniyyiin, ʕisbaan, ʕasbaan*/ a Spaniard. **3** /no pl/ the Spanish language.
إسبانيولى *ʕisbanyooli* /pl *ʕisbanyooli*/ **1** /adj/ Spanish. *ḥumma ʕisbanyooli* Spanish influenza. *raqṣa ʕisbanyooli* Spanish dance, Flamenco dance. **2** /n/ *[obsol]* Spaniard. – /no pl/ **3** the Spanish language.

ء س ب و ر
إسبور *ʕisboor* <Fr *sport*> /adj invar/ **1** casual (of clothes etc.). *ʕif-fanṭa di sboor miʃ tiwalitt* that's a casual bag, not for dressy occasions. – /adverbially/ *laabis ʕisboor* dressed casually. **2** broad-minded. *xallii-k ʕisboor* don't be so narrow-minded!

ء س ت
است *ʕist*↑ /n/ behind, posterior, backside.

ء س ت ا د
إستاد *ʕistaad* <Fr *stade*> /n pl *-aat*/ stadium.

ء س ت ا ن
الاستانة *ʕil-ʕistaana, ʕil-ʕasitaana* <T *asitane*> /prop n/ *[obsol]* Istanbul.

(ء س ت ب ب)
إستوبّ ʕistubb <Engl *stop*>: *nuur il-ʕistubb* (1) red traffic-light. (2) brake-light. *saaʕa stubb* stop-watch. *ʕistubb [cin]* cut!
إستوبّة ʕistubba <It *stoppa*> /n/ **1** /pl *-aat*/ length of oakum used as a bung for a leaky joint. **2** /coll n/ rag. - also *ʕisṭubba*.

ء س ت ب ن
إستبن ʕistibn <Engl *stepney*> **1** /n pl *-aat*/ spare wheel. **2** /adj/ invar/ spare, held in reserve. *ʔalam ʕistibn* a spare pen.
إستبنة ʕistibna /n pl *-aat*/ spare wheel.

(ء س ت ب –)
إستابينا ʕistabeena <It *sta bene*> /interj/ agreed! done!
إستبليا ʕistibalya↓ <T *isbitalya* from It> /n pl *-aat*/ hospital. - also *ʕisbitalya*.

ء س ت ج –
إستجماتيزم ʕistigmatizm <Engl> /n/ astigmatism.

ء س ت د –
إستوديو ʕistudyu <perh It> /n pl *-haat*/ studio, especially of a photographer. *kanaba studyu* a studio couch.

ء س ت ذ see ء س ت ز

ء س ت ر
أستر ʕustur, ʕuṣṭur <perh It *lustro*> /n/ spirit polish used for furniture.
أسترجي ʕusturgi /n pl *-iyya*/ French polisher.

ء س ت ر ب
إستروبيا ʕistrubya <perh Fr *estropié*> **1** /adv/ by chance, by a fluke. *nagaḥ fil-imtiḥaan ʕistrubya* he succeeded in the exam by a fluke. **2** /n pl *-aat*/ fluke, chance. -/adjectivally/ *nagaaḥ ʕistrubya* false success. *da fannaan ʕistrubya* he's an impostor making himself out to be an artist.

ء س ت ر ت
إستارت ʕistart <Engl> /n/ start (of a race). ‖*siwitf il-ʕistart* start-switch.

ء س ت ر – [1]
إستراتيجي ʕistiratiiji <Engl> /adj */ strategic.
إستراتيجيّة ʕistratijiyya /n/ strategy.

ء س ت ر – [2]
أستراليا ʕusturalya /prop n/ Australia.
أسترالى ʕusturaali **1** /adj */ Australian. ‖*bavl usturaali* an oaf. **2** /n */ an Australian.

ء س ت ر – [3]
إسترادة ʕistiraada <Fr *estrade*> /n pl *-aat*/ table, wooden platform in a classroom.
إستريو ʕistiryu <Engl> /n pl *-haat*/ **1** stereo record-player. **2** discotheque.
إسترلينى ʕistirliini <Engl> /adj/ sterling.

ء س ت ز
أستاذ ʕustaaz /n pl ʕasatza, ʕasatiiz↓/ **1** title of, and polite form of address or reference to, a teacher or to a man not otherwise qualified for a title (e.g., by profession or status). **2a** *[acad]* professor. *ʕustaaz musaaʕid* university teacher approximately equal to senior lecturer (Brit.) or associate professor (U.S.). *ʕustaaz kursi* (or *bi-kursi*) holder of a professorial chair. **2b** school-teacher. **3** man wearing the traditional dress of a *feex* (i.e., a gown and turban). ‖*daftar il-ʕustaaz* master ledger, master register.
أستاذة ʕustaaza /n pl *-aat*/ **1** *[acad]* woman professor. **2** woman school-teacher.
أستازيّة ʕustaziyya /n/ *[acad]* **1** M.A. degree. **2** professorship. *kursi l-ʕustaziyya* professorial chair.
اتأستذ ʕitʕastiz /vi/ *[abus]* to give pompous or officious advice, play the school-master. *ʕinta ḫa-titʕastiz ʕaleena* are you trying to tell us what's what? - vn ʕastaza; ava *mitʕastiz*.

ء س ت غ – see غ م ى : *ʕistuvummaaya*

ء س ت ف –
إستفندى ʕistafandi <prop n *Yusuf Efendi*> /coll n/ tangerine(s). - also *yusafandi, yustafandi, yuusif ʕafandi, yusfi, safandi*.
إستفندياية ʕistafandiyaaya /unit n, pl *-aat*/ a tangerine. - also *yusafandiyaaya, yustafandiyaaya, yuusif ʕafandiyaaya, safandiyaaya*.

ء س ت ك see also ء س ت ى ك
أستك ʕastik <Engl> /n/ **1** elastic. *gazma ʕastik* a pair of elastic-sided boots. *zimmit-u ʕastik* his conscience is flexible. **2** /pl ʕasaatik/ piece of elastic (usually covered with some kind of material). **3a** /coll n/ rubber band(s). **3b** /pl ʕasaatik/ rubber band.
أستكاية ʕastikaaya /unit n, pl *-aat*/ a rubber band.

ء س ت ك ك
إستوكّ، ستوكّ ʕistukk <Engl> /n pl *-aat*/ *[comm]* stock.

– ء س ت ك
أستكوزا ʔastakooza, ʔistakooza <Gr astakos> /n/ **1** /coll/ spiny lobster(s), langouste(s). **2** /unit n, pl -aat/ a spiny lobster, a langouste.
أستكوزاية ʔastakozaaya /unit n, pl -aat/ a spiny lobster, a langouste.

– ء س ت ل ن
أستلين ʔasitliin <Engl> /n/ acetylene. *liḥaam ʔuksijiin asitliin* oxy-acetylene welding.

– ء س ت م see ¹ء م ر: *ʔistimaara*

(ء س ت ن ج)
إستنج ʔistung <T ustunç> /n pl -aat/ draughtsman's case of drawing instruments. - also *ʔuṣṭung*.
إستنجة ʔistinga <T istinga> /n/ *[naut]* brail.

¹(– ء س ت ن)
إستنجلينا ʔistangaliina /adj invar/ crazy.
إستنسل ʔistinsil <Engl> /n/ stencil. *maṭbaɛit ʔistinsil* mimeograph machine.

² – ء س ت ن see ¹ء ن ى: *ʔistanna*

ء س ت و ن
أسيتون ʔasitoon <perh Fr> /n/ acetone.

(ء س ت ى ك)
أستيك ʔusteek <T köstɘk> /n pl -aat, ʔasatiik, ʔasaatik/ watch strap, watch bracelet.
أستيكة ʔastiika¹ <Fr élastique> /n pl ʔasatiik/ **1** eraser, rubber. **2** barber's rubber bowl (with a base for wiping lather off the razor).
أستيكة ʔastiika² <It stecca> /n pl -aat/ **1** stick of carved bone (used in book-binding). **2** billiard cue.

ء س ت ى ل
إستيل ʔistiil <Fr style> /n/ period furniture, especially of the French rococo style.

ء س د
أسد ʔasad /n pl ʔusuud, ʔusúda/ **1** lion. *mudarrib ʔusuud* lion tamer. *daaʔ il-ʔasad [path]* leontiasis. **2** *ʔil-ʔasad [astrol]* Leo.
أسّد ʔassid /vi/ to become coarse (of skin). *ʔiday-ya ʔassidit mil-qaʃaf* my hands have become (rough from being) chapped. - vn *taʔsiid*; pva *miʔassid*.
اتأسّد ʔitʔassid /vi/ *[path]* to be affected by leontiasis. - iva *mitʔassid*.

استأسد ʔistaʔsid /vi/ to show courage, pretend to be brave. - ava *mistaʔsid*.

¹ء س ر
أسر ʔasar¹↑ *(i)* /vt/ to take captive. - vn *ʔasr, ʔasr*; ava *ʔaasir*; pva *maʔsuur*.
أسير ʔasiir¹ /n pl *ʔasra, ʔusara, yusara*/ prisoner, captive.
¶ *ya badawi gaab il-yusara* o Badawi (who) brought back the captives! (chant sung in praise of Sayyid Ahmad el-Badawi).
اتاسر ʔitʔasar /vi/ to be captured. - iva *mitʔisir*.

²ء س ر
أسرة ʔusra /n pl ʔusar/ **1** family. *ʔafraad il-ʔusra* family members. **2** dynasty. **3a** staff. *ʔusrit il-magalla* the staff of the magazine. *ʔusrit ig-gamɛa* the staff of the university. **3b** social or cultural club in, e.g., a university.

³ء س ر
أثر ʔasar² /n pl ʔasaar/ **1** effect. *bi-ʔasar ragɛi* with retroactive effect. *ʔil-ɛilaqaat if-faxṣiyya liiha ʔasar kibiir fit-taɛaamul maɛa l-ɛumala* personal relations greatly influence one's dealings with clients. **2a** trace, vestige. *ʔasar rigl-* footprint. *laazim ʔasar if-faḥm¹ yitɣisil* the trace of grease must be washed off. *ʔil-ʔutubiis mif bayin-lu ʔasar* there's no sign of the bus. **2b** relic. *ʔis-saaɛa di ʔasar ɛan gidd-i* this watch came down to me from my grandfather. ‖ *ʔasar* (or *ʔatar*) *in-nabi* a village on the Nile between Cairo and el-Ma'adi. — *ʔasaar* /pl n/ **3** antiquities, historical remains. *maṣlaḥit il-ʔasaar* the Department of Antiquities. *daar il-ʔasaar* the Egyptian Museum. *bi-ytaagir fil-ʔasaar* he deals in (Egyptian) antiquities.
أثر، أتر ʔatar /n pl -aat/ a personal article, usually a piece of clothing, used as a token in magic or folk medicine (cf *ʔasar* 2 b).
أثرى ʔasari /adj */ pertaining to antiquities or historical remains. *ʔil-ʔamaakin il-ʔasariyya* historical sites. *tuḥaf ʔasariyya* historical treasures. *ɛarabiyya ʔasariyya* (1) a veteran car. (2) *[joc]* an old jalopy.
مأثور maʔsuur↑ /adj/ preserved from the past. *ḥikam maʔsuura* treasured aphorisms from the past.
أثّر ʔassar /vi/ **1** to have an effect, exert influence. *ma-tḥawil-fi¹ tʔassar ɛala raʕy in-naas* don't try to influence people's opinions. *tavayyuraat is-suuq bi-tʔassar ɛala l-iqtiṣaad* fluctuations in the market affect the economy. **2** to have emotional impact. *ʔil-film¹ ʔassar ɛalayya qawi* the film moved me deeply. - vn *taʔsiir*; ava *miʔassar, muʔassir*.

تأثير *taʃsiir* /n pl *-aat*/ effect, impact. *taʃsiir il-ħaḍaara ʃ-ʃarqiyya ɛala l-ɣarb* the impact of Eastern culture on the West.
التأثيريّة *ʃit-taʃsiriyya* /n/ *[art]* impressionism.
مؤثر *muʃassir*↑ /n pl *-aat*/ effect. *muʃassiraat ṣotiyya* sound effects.
اتأثّر *ʃitʃassar* /vi/ **1** to be influenced, be affected. *kunᵢ lissa mitʃassar bil-minawwim* I was still under the effect of the sleeping pills. **2** to be affected emotionally. *ʃitʃassartᵢ lamma ʃuft-a-ha bi-tɛayyaṭ* I was moved when I saw her crying. -iva *mitʃassar*.
استأثر *ʃistaʃsar*↑ /vi/ **1** to take exclusive possession. *ʃistaʃsar bil-filuus kullᵢ-ha l-nafs-u* he appropriated all the money for himself. **2** to exercise a monopoly. *ʃiʃ-ʃirka staʃsarit bi-tawziiɛ il-laban* the company had a monopoly in milk distribution. -vn *ʃistiʃsaar*; ava *mistaʃsar*.

[4] ء س ر see ء س ى ر : *ʃasiir*[2]

– ء س ر ء
إسرائيل *ʃisraʃiil* /prop n/ Israel.
إسرائيلي *ʃisraʃiili* **1** /adj */ Israeli. **2** /n */ an Israeli.

– ء س ر ف
إسرافيل *ʃisrafiil* /prop n/ *[Isl]* Israfil, the angel who will sound the trumpet on the Day of Judgement.

[1] ء س س
أسّ *ʃuss* /n/ **1** *[math]* power, exponent of a power. *ʃitneen ʃussᵢ talaata* two to the power of three, two cubed. **2** root, origin. *ʃir-raagil da ʃussᵢ (il-)fasaad* this man is the root of all corruption.
إسّ *ʃissᵢ* /n/ motive, cause. *ʃilli ħaṣal kaan bi-ʃissᵢ minha* she was the cause of all that happened.
أساس *ʃasaasᵢ* /n pl *-aat*/ basis, foundation. *ʃasasaat il-mabna* the foundations of the building. *kiriim ʃasaas* foundation cream. *ʃil-ɛuluum ʃasaas il-ħayaah* the sciences are the basis of life. *ʃixtiyaar ħurrᵃ ɛala ʃasaas il-musawaah been il-gamiiɛ* a free choice on the basis of complete equality. *naas ʃasas-hum min ma-fii-ʃ* people who started from nothing.
¶ *ɛala ʃasaas ʃinn* /conj/ on the understanding that. *saab il-muftaaḥ maɛa l-bawwaab ɛala ʃasaas ʃinnᵢ lamma ykuun ɣaayib niqdar nudxul* he left the key with the janitor on the understanding that we can get in when he's away. -*ʃasaasan* /adv/ basically, fundamentally. *ʃil-ħarbᵢ ʃasaasan imtiḥaan lif-faɛb* war is basically a test of the people.

أسّس *ʃassisᵢ* /vt/ **1** to found, base. **2** to prepare (a wall or the like) for painting. -vn *taʃsiis*; ava/pva *miʃassis*.
مؤسّس *muʃassis*↑ /n */ founder. *muʃassisiin il-ħizb il-waṭani* the founders of the National Party.
مؤسّسة *muʃassasa* /n pl *-aat*/ **1** public sector corporation. **2** organization, (cultural or educational) foundation. **3** legal institution. *dawlit il-muʃassasaat* rule according to established legal institutions.
اتأسّس *ʃitʃassisᵢ* /vi/ to be founded, be established. -iva *mitʃassis*.

[2] ء س س
إسّ *ʃiss*[2] <T *es*> /n/ *[mus]* rest.

[3] ء س س
أثاث *ʃasaas*[2] /n/ furniture.
أثّث *ʃassis*[2] /vt/ to furnish (a house). -vn *taʃsiis*; ava *muʃassis*.
اتأثّث *ʃitʃassis*[2] /vi/ to be furnished. -iva *mitʃassis*.

ء س ط ا
أوسطى، أسطى *ʃusṭa* <T *usta*> /n pl *ʃusṭawaat*/ title of, and form of address or reference to, one who has undergone training or apprenticeship in a craft or profession regarded as skilled, e.g., foreman of a small workshop, carpenter, qualified machine operative, driver, laundry-man, belly-dancer, leader of a troupe of female dancers and musicians.

ء س ط ا ف
إسطاف *ʃisṭaaf* <Engl> /n/ staff (in an organization, school etc.).

ء س ط ا م
إسطامة *ʃisṭaama* <perh It *stame*> /n pl *-aat*/ stile (of a door or window).

ء س ط ب ب
إسطوبّة *ʃisṭubba* <It *stoppa*> /n/ **1** /pl *-aat*/ length of oakum used as a bung for a leaky joint. **2** /coll n/ rag. -also *ʃistubba*.
إسطوبّاية *ʃisṭubbaaya* /unit n, pl *-aat*/ a piece of cotton waste.

ء س ط م ب
إسطمبة *ʃisṭamba* <It *stampa*> /n pl *-aat*/ **1** mould, matrix. **2** piece of equipment, or tool, of a standard size. *bubiina sṭamba* a standard-size spool. **3** *[carp]* curve (instrument for describing curves).

ء س ط ن –
إسطانبول *ʔistambuul, ʔistanbuul* /prop n/ Istanbul.
إسطانبلّي *ʔistambulli, ʔistanbulli* <T *istanbullu*> /adj */ pertaining to Istanbul. ‖*qarɛ*[1] *ʔistambulli* variety of edible gourd (Curcubita maxima), similar to a pumpkin. *-kanaba ʔistambulli* ottoman, divan. *-gibna stambulli* mature salty white cheese. *-furraaba stambulli* prayer-bead tassle made of fine metal chain.

ء س ط و ر
أسطورة *ʔustuura*↑ /n pl *ʔasaṭiir*/ **1** legend, myth. *ʔik-kalaam da ʔasaṭiir* that talk is (mere) tales. **2** source of amazement.
أسطورى *ʔustuuri* /adj/ legendary, mythical.

ء س ط و ل
أسطول *ʔustuul, ʔastuul* /n pl *ʔasaṭiil, ʔasaṭiil*/ fleet.

ء س ط و –
إسطوانة *ʔistuwaana* /n pl *-aat*/ **1** cylinder. **2a** gramophone record. **2b** spiel, patter, rigmarole.
إسطوانى *ʔistuwaani, ʔustuwaani* /adj/ cylindrical.

ء س ف
أسف *ʔasaf* /n/ sorrow, regret. *maɛa* (or *li-*) *l-ʔasaf* unfortunately.
آسف *ʔaasif* /ava/ regretful, sorry.
اتأسّف *ʔitʔassif, ʔitʔassaf* /vi/ to apologize, express regret. *ʔitʔassifit-lu li-lli ḫaṣal minhum* she apologized to him for what they had done. - ava *mitʔassif, mutaʔassif*.
متأسّف *mutaʔassif* /adj */ sorry, regretful.
مؤسف *muʔsif* /adj/ distressing, saddening. *bi-yitṣarraf taṣarrufaat muʔsifa* he behaves in an upsetting way. *xabar muʔsif* sad news.

ء س ف خ ص
إسفخص *ʔisfuxṣ* /interj/ exclamation of disgust ≈ ugh! *ʔisfuxṣ*[a] *ɛala kida* how disgusting!

ء س ف ل ت
أسفلت *ʔasfalt* <Fr> /n/ asphalt.

ء س ف ى ن
إسفين *ʔisfiin* <Gr *sphên*> /n pl *ʔasafiin*/ *[carp]* wedge. ‖*ḍarab ʔisfiin benhum* he drove a wedge between them. - *ʔidda-lha ʔisfiin* he played a dirty trick on her.

ء س ق ر –
إسقربوط *ʔisqarbuuṭ*↑ <It *scorbuto*> /n/ scurvy.

ء س ق ف
أسقف *ʔusquf, ʔusqūf* <Gr *episkopos*> /n pl *ʔasaaqifa, ʔasaqfa, ʔasaqfa*/ bishop.
أسقفى *ʔusqufi, ʔusqufi* /adj/ episcopal.
أسقفيّة *ʔusqufiyya, ʔusqufiyya* /n pl *-aat*/ **1** bishopric, episcopate. **2** bishop's residence. **3** administrative centre of a bishopric.

ء س ك ا –
أسكاريس *ʔaskaaris, ʔiskaaris* <Gr *askaris*>: *duud ʔaskaaris [path]* ascarides, threadworms.

ء س ك ت ش
إسكيتش *ʔiskitf* <Engl> /n pl *-aat*/ **1** sketch. **2** sketch pad.

ء س ك ت –
إسكيتنج *ʔiskiiting, ʔiskeeting* <Engl> /n/ skating.

ء س ك ر ت
إسكرتة *ʔiskirta* or *ʔiskarta* (also *sikirta* or *sikarta*) <It *scarto*> /n/ **1** cotton waste. **2** something shoddy or in bad condition, something fit only to be thrown away. *ɛarabiyya skirta* a wreck of a car. **3** discard pile (in cards).
إسكرتو *ʔiskirtu* or *ʔiskartu* (also *sikirtu* or *sikartu*) = *ʔiskirta*.

ء س ك ر و
إسكرو *ʔiskuruu* <Engl *screw*> /n/ spin (on a ball). *ʔidda* (or *liɛib) ik-koora skuruu* he put a spin on the ball. ‖*ɛalam ʔiskuruu* propelling pencil.

ء س ك ل
أسكلة *ʔaskala* <prob T *iskele* from Gr> /n pl *ʔasaakil*/ quay, wharf, jetty.

[1] ء س ك ن –
إسكندريّة *ʔiskindiriyya, ʔiskandariyya* /prop n/ Alexandria.
إسكندرانى *ʔiskandaraani* /adj */ **1** Alexandrian. **2** having dark-brown glaze (of pottery). – /n/ **3** /pl *-yya*/ an Alexandrian. **4** /no pl/ drum rhythm employed in the *zaar*.

[2] (ء س ك ن –)
إسكنديل *ʔiskandiil* <T *iskandil*> /n/ *[naut]* lead and line.
إسكندال *ʔiskandaal* <Fr *scandale*> /n/ scene, scandal.

ء س ك و ت see ء ش ك و ط : *ʔiskuuta*

ء س ك و ل
إسكولة *ʔiskuula, ʔiskoola* <It *scuola*> *[obsol]*: ***bituuɛ ʔiskuula*** students (in general). - ***ɛaamil bitaaɛ ʔiskuula*** acting learned.

ء س ل و ب see ³ س ل ب

¹ ء س م see also س م ى
أسم *ʔism¹* /n/ **1** /pl *ʔasma, ʔasaami, ʔasmaaʔ*/ name. ***bi-niɛraf-u bil-ʔism*** we know him by name. ***ɛala ʔism ...*** after the name of ..., as in ***sammuu ɛala ʔism abuu*** they named him after his father, ***kiniisa ɛala ʔism il-ɛadra*** a church dedicated to the Virgin Mary. ***law kaanit il-ʔasma tinfara kaan il-faqiir samma-bn-u xara [prov]*** (if names had to be bought with a price, the poor man would have to name his son Shit) ≈ what's in a name? ‖ ***ʔana xaayif ɛala ʔism-i*** I am fearful for my reputation. -***ʔism[a] ɛala musamma*** a fitting name. -***ɛaafit il-ʔasaami ↓ [women]*** an expression used when someone (especially a child) is mentioned by name ≈ may the one mentioned live long! - ***ʔil-ʔasmaaʔ il-ḥusna*** the epithets of God. - ***ʔism-alla*** (or ***ʔism-alla ɛala ...***) and, among Christians, ***ʔism iṣ-ṣaliib*** (or ***ʔism iṣ-ṣaliib ɛala ...***) an invocation of divine protection, as in ***ʔizzayy ibn-ik ʔism-alla*** (or ***ʔism-alla ɛalee***) ≈ how's your son, God protect him? ***ʔil-waad ʔism-alla ɛala maqaam-ak ball[i] ruuḥ-u*** ≈ the boy, begging your pardon, wet himself; - also used with affectionate derision, as in ***gaa-ni si-sm-alla mḥammad yinadii-ni*** ≈ Mr - may God bless his little heart - Muhammad came to call me, ***ʔism-alla ɛala ɛaql-ak*** ≈ use your head! - ***(ʔitfaḍḍal) bi-sm-illa*** ≈ please help yourself! (an invitation to share food). - ***bi-sm illaahi r-raḥmaan ir-raḥiim [Isl]*** invocation of divine protection used at the beginning of any task, no matter how great or small. - ***ʔism in-nabi ḥars-u w-ṣayn-u*** may the Prophet's name guard and protect him (used in conversation about a child). - ***da-sm-u kalaam*** is that any way to talk? - ***ɛazzeet-u ɛal-baab wi-sm-i ʔaddeet waagib*** I only paid him my condolences at the door, but one may say I've done my duty. - ***bi-yruuḥu l-madrasa ma-b-yiɛmiluu-ʃ ḥaaga wil-ʔism[i] mudarrisiin*** they go to school and do nothing and for that they get called teachers. **2** /pl *ʔasmaaʔ* only/ *[gram]* noun.
¶ ***ʔism[i] ʔinn*** /conj/ in view of the fact that. ***ʔinta l-masʔuul ʔism innak rayyis-hum*** you are responsible since you are their boss.
اسمى ***ʔismi*** /adj */ nominal. ***sanad ʔismi*** a nominal share.

² ء س م
إثم *ʔism²* /n/ sin. ***ʔinna baɛḍ iẓ-ẓann[i] ʔism*** ≈ to think even a little evil of someone is a sin (admonition not to think ill of others).

– ء س م ع
الإسماعيليّة *ʔil-ʔismaɛiliyya* /prop n/ Ismailia, a city on the west bank of the Suez Canal.
الإسماعيلى *ʔil-ʔismaɛiili: ʔin-naadi l-ʔismaɛiili* the Ismailia Club (famous for its football team).
إسماعلاّوى *ʔismaɛallaawi* **1** /adj/ of, or pertaining to, Ismailia. – /n/ **2** /pl *-yya*/ one from Ismailia. **3** /coll/ honeydew melon(s).

ء س م ن ت
أسمنت *ʔasmant* <Engl> /n/ cement.

ء س م و –
إسموكنج *ʔismooking* <Fr *smoking*> /n invar/ **1** dinner-suit(s), (men's) evening-dress. **2** smooth woven synthetic fabric.

ء س ن ا
إسنا *ʔisna* /prop n/ Esna, a town in Upper Egypt (known in particular for its fine lentils).
إسناوى *ʔisnaawi* **1** /adj */ pertaining to the town of Esna. **2** /n pl *-yya*/ native of Esna.

– ء س ن س
أسانسير *ʔasanseer, ʔaṣanṣeer* <Fr *ascenseur*> /n pl *-aat*/ **1** lift, elevator. **2** *[phot]* manoeuvring apparatus of a camera tripod.

ء س و ا ن
أسوان *ʔaswaan* /prop n/ Aswan, a city and province in Upper Egypt.
أسوانى *ʔaswaani, ʔaswaani* /adj */ pertaining to Aswan.
أسوانلى *ʔaswanli* /adj */ pertaining to Aswan.

ء س و ح see س و ح : *ʔiswiḥ*

ء س و خ see س و خ : *ʔiswix*

ء س و ر see ³ س و ر : *ʔaswira, ʔisweera*

ء س ى
أسى *ʔasaʔ* /n/ sorrow.
أسيّة *ʔasiyya* /n/ maltreatment and the suffering it causes. ***ʔil-ʔumm[i] dayman ḥammaalit ʔasiyya*** a mother always bears the brunt.

ء س ي ا
آسيا ʕasyaˀ /prop n/ Asia.
آسيوى ʕasyawiˀ /adj */ Asian.

ء س ي ر see also ء ت ي ر
أثير ʕasiir[2]: *ɛala ginaaḥ il-ʕasiir* by radio.

ء س ي و ط
أسيوط ʕasyuuṭ /prop n/ Assiut, a city and province in Upper Egypt.
أسيوطى ʕasyuuṭi /adj */ pertaining to Assiut. ‖*ṭaqm*[i] *ʕasyuuṭi* set of furniture consisting of a sofa and chairs, having wooden frames and arms and separate cushions for seats and backs.

ء ش see ء ى ش: *ʕeeʃ*

[1] ء ش ا ع see ش ع ع: *ʕuʃaaɛa*

[2] ء ش ا ع see [1] ش ى ع: *ʕiʃaaɛa, ʕaʃaaɛa*

ء ش ب ا ر
إشبار ʕiʃbaar <Copt>: *ʕiʃbaar ɛala-* expression of disdain, as in *ʕiʃbaar ɛaleena min kalam-hum fiina* what does it matter to us if they gossip about us!

ء ش ت ك
أشتك ʕaʃtik <perh T *haştek*> /n pl *ʕaʃaatik*/ underarm gusset.
أشتيك ʕaʃtiik /n pl *ʕaʃatiik*/ = *ʕaʃtik*.

ء ش ر see also [1] ش و ر
أشر ʕaʃʃar /vi/ 1 to endorse officially, give a signed ruling (on an official or commercial document). *ʕaʃʃar ɛalee bil-ḥifẓ* he gave it a 'no action' endorsement. 2 to gesture, usually with the hand. *kaanit ḥa-tinzil maɛaaya loola ʕaʃʃar laha tquul laʔ* she would have come down with me had it not been for his motioning to her (secretly) to refuse. - vn *taʕʃiir*; ava *miʕaʃʃar*.
تأشيرة *taʕʃiira* /n pl *-aat*/ 1 signed endorsement (on an official or commercial document). 2 visa. *taʕʃiirit duxuul* entry visa.
مؤشّر *muʕaʃʃir* /n pl *-aat*/ pointer, indicator. *muʕaʃʃir is-surɛa* the speedometer needle.
اتأشّر *ʔitʕaʃʃar* /vi/ (impersonal) passive of *ʕaʃʃar*. *ʔil-gawaab itʕaʃʃar ɛalee* the letter was given a signed ruling. - iva *mitʕaʃʃar*.

ء ش ر ب
إيشارب *ʔiʃarb* <Fr *écharpe*> /n pl *-aat*/ woman's scarf.

ء ش ر ج ى see [1] ش و ر: *ʕaʃargi, ʔiʃargi*

ء ش ش
إش *ʔiʃʃ* 1 /interj/ exclamation of friendly admiration ≈ wow! my! 2 *ʔil-ʔiʃʃ* exclamation of wonder, used hypothetically ≈ whatever would have happened? *wil-ʔiʃʃ*[i] *baɛa law wişlit w-ana naayim* whatever would have happened, then, if she'd arrived while I was asleep?

ء ش ف ر
أشفر ʕaʃfar /vt/ *[slang]* to relieve (s.o.) of (all) money. *ʕaʃfart iz-zibuun* I took the customer to the cleaner's. - also *ɛaʃfar*. - vn *ʕaʃfara*; ava/pva *miʕaʃfar*.
اتأشفر *ʔitʕaʃfar* /vi/ passive of *ʕaʃfar*. - iva *mitʕaʃfar*.

ء ش ك ب ب
أشكبّة *ʕuʃkubba* <It *scopa*> /n/ *[naut]* broom, mop. - also *ʃukubba*.

ء ش ك ر -
إشكرمة *ʔiʃkarma* <Gr *skarmos*> /n pl *-aat*/ *[naut]* tholepin. - also *ʃikarma*.

ء ش ك و ط
أشكوطة *ʕaʃkuuṭa* (also *ʔiskuuta*) <It *scotta*> /n pl *-aat*/ *[naut]* sheet (of a sail).

ء ش ل
أشلان *ʕaʃlaan* /adj */ bankrupt.
أشّل *ʕaʃʃil* 1 /vt/ to leave (s.o.) penniless, clean out. *ʔil-ḥaraami ʕaʃʃil il-beet min kull-u* the thief stripped the house bare. 2 /vi/ to run out (of money, possessions etc.). *ma xalaaṣ ʕaʃʃil min kull*[i] *fluus-u* he's completely cleaned out. - vn *taʕʃiil*; ava/pva *miʕaʃʃil*.
اتأشّل *ʔitʕaʃʃil* /vi/ to become destitute. *ʔitʕaʃʃilt*[i] *min kull*[a] *ḥaaga* I've got nothing left to my name. - ava *mitʕaʃʃil*.

ء ش ل ا ل
إشلال *ʔiʃlaal* <Copt> /interj/ *[Chr]* let us pray! (said by the priest to the congregation). - also *ʔiʃliil*.

ء ش ل ى ل
إشليل *ʔiʃliil* <Copt> /interj/ *[Chr]* let us pray! (said by the priest to the congregation). - also *ʔiʃlaal*.

ء ش م ع - see ء ى ش: *ʔiʃmiɛna*

[1] ء ش ى
إشى *ʔiʃi* particle used 1 in listing a series. *ɛandu*

mimma gamiiɛ-u ʕifi gibna w-ʕifi zatuun wi-ʕifi sardiin ma-tɛidd^{i}-ʃ he has something of everything - cheese, olives, sardines, and what have you. **2** repeated, as a set phrase to introduce a riddle. *ʕifi ʕifi xarab-ha w-mifi* ≈ guess who? guess who? he ruined it and left (i.e., guess who did that). **3** with the meaning 'something' in the rhyme: *xuʃʃ^{i} b-ʕifi tibqa ʕifi - xuʃʃ^{i} balaaʃ tibqa walaa-ʃ* enter with something and you'll be something, enter with nothing and you'll be nothing.

ء ش ى [2]
أوشيّة *ʕuʃiyya* <Gr *eukhê*> /n pl *ʕawaaʃi/ [Chr]* prayer, intercession. *ʕuʃiyyit il-marḍa* prayer for the sick.

ء ش ى د
أشيدة *ʕaʃiida* /n/ cloth grip on a carding bow.

ء ص ص
أصيص *ʕaṣiiṣ* /n pl *ʕuṣuṣ*/ flowerpot.

ء ص ط ا see ء س ط ا: *ʕusṭa*

ء ص ط ب ل
إصطبل *ʕiṣṭabl* /n pl *-aat*/ stable.

ء ص ط ن ج
أصطنج *ʕuṣṭung* <T *ustunç*> /n pl *-aat*/ draughtsman's case of drawing instruments. - also *ʕistung*.

ء ص ف
أصف *ʕaṣaf* <Copt> /n/ caper bush, caper root.

ء ص ل [1]
أصل *ʕaṣl* /n pl *ʕuṣuul*/ **1** origin, source. *da min ʕaṣl^{i} yunaani* it's of Greek origin. *kaan ʕaṣl-u baḥḥaar* he was a sailor originally. *ʕil-ḥikaaya di laha ʕuṣuul min ʕayyaam il-ʕingiliiz* this business goes back to the days of the British. ‖ *kaddaab fi-ʕaṣl^{i} wiff-u* a barefaced liar. **2** lineage, breeding, stock, pedigree. *ɛandu ʕaṣl* he's a decent sort. *ɛamal bi-ʕaṣl-u* he acted according to the dictates of his breeding. *ʕaṣl-ak fiɛl-ak* you are what you do. *ɑal-li ɛan ʕaṣl-u w-faṣl-u* he told me all about himself. ‖ *ma-luu-ʃ ʕaṣl* he doesn't know how to behave. **3a** original copy. *ʕiktib-li ʕaṣl^{i} w-ʂurteen* type me an original and two copies. *ʕuṣuul maktuuba bil-yadd* hand written original(s). **3b** *[phot]* negative. — /conj/ **4** the fact is that, because. *ma-yiɛraf-ʃ^{i} yiɛmil ḥaaga ʕaṣl-u ɣabi* he can't do anything because he's stupid. *ʕaṣl-a-ha ɣeer il-banaat dool* the fact is that she's not like those girls. *ʕaṣl-u-hum ɛamliin gidɛaan* the fact is that they're just acting tough. — *ʕuṣuul* /pl n/ **5a** foundations, fundamentals. ‖ *ʕil-ʕuṣuul ʕil-ʕarbaɛa* the four foundations of Muslim jurisprudence. **5b** rules. *ʕuṣuul il-liɛb* the rules of the game. **5c** code of social conduct, correct behaviour. *kull^{a} ḥaaga bil-ʕuṣuul* there's a proper way to do everything. *ḳaan il-ʕuṣuul il-waaḥid yixlaṣ min waḥda zayy^{i} di biṭ-ṭalaaq* the proper thing would have been to get rid of such a woman by divorce. ‖ *ʕibn il-ʕuṣuul* one of good breeding. **6** *[finan]* assets. *ʕuṣuul wi-xuṣuum* assets and liabilities. **7** *[hort]* stock.

¶ *ɛala ʕaṣl-u* or *ɛala ʕuṣuul-u* as it really should be, as in *kuʃari ɛala ʕaṣl-u* (or *ɛala ʕuṣuul-u)* properly made kushari, kushari the way it ought to be done. - *ʕaṣlan* /adv/ (1) originally, initially. (2) basically, fundamentally. - *min ʕaṣl-u* /adv/ categorically (not), absolutely (not). *ma-ʃuft-uu-ʃ min ʕaṣl-u* I have not seen him at all. - *fil-ʕaṣl* /adv/ originally.

أصلى *ʕaṣli* /adj */ **1** original. *ʃihaadit il-milaad il-ʕaṣliyya* the original birth certificate. **2** authentic, genuine. *gild^{i} ʕaṣli* genuine leather. *ṣaluun mudhab mil-ʕaṣli* a genuine gilt sitting-room suite. ‖ *ʕaṣli ya gaaz [vendor's cry]* paraffin free of impurities!

أصولى *ʕuṣuuli* /adj/ correct, proper. *ɣaɑgil ʕuṣuuli* an upright man.

أصولجى *ʕuṣulgi* /n pl *-yya/ [derog slang]* one who conforms with established patterns of social conduct.

أصالة *ʕaṣaala* /n/ genuineness, authenticity. *ʕaṣaalit il-fannaan fi-ʃuɣl-u* the artist's genuineness in his work.

أصيل *ʕaṣiil* /adj pl *ʕuṣala/* **1** of good stock, well-bred, well-born. *ḥuṣaan ʕaṣiil* a pure-bred stallion. *xud il-ʕaṣiila wi-law kaanit ɛal-ḥaṣiira [prov]* marry a well-born woman no matter how poor she may be. **2** genuine, authentic.

مؤصّل *miʕaṣṣal* /adj */ = *ʕaṣiil*.

اتأصّل *ʔitʕaṣṣal* /vi/ to take root. *ʔil-fikra tʕaṣṣalit fi-dmaaɣ-i* the idea became rooted in my mind. - ava *mitʕaṣṣal, mutaʕaṣṣil↑*.

استأصل *ʔistaʕṣal↑* **1** /vt/ to remove completely, extirpate. *laazim nistaʕṣil il-ɛanaaṣir il-haddaama* we must eliminate destructive elements. *ʔistaʕṣal il-waram* he removed the tumour. **2** to select for good origin. ‖ *ʔistaʕṣal wi-tgawwiz* find yourself someone from a good family and marry her. — /vi/ **3** to become chronic. *ʔil-maraḍ istaʕṣal fii* the disease became chronic in him. *ʔik-kizb istaʕṣal fii* he became a chronic liar. - vn *ʔistiʕṣaal*; ava *mistaʕṣil, mistaʕṣal, mustaʕṣil*; pva *mustaʕṣal*.

ء ص ل ²
أصل ʕaṣal /coll n/ python(s).
أصلة ʕaṣala /unit n, pl -aat/ a python.

ء ص ن ص
أصانص ʕaṣanṣ <Fr> /n pl -aat/ essence, concentrate. ʕaṣanṣ[i] yasmiin jasmine essence.

– ء ص ن ص see – ء س ن س : ʕaṣanṣeer

ء ض ا ح
أضاحة ʕaḍaaḥa↓ *[women]* exclamation of concern or mild disapproval. *ya di l-ʕaḍaaḥa* what a sorry state of affairs!

ء ض ل ى
أضليا ʕaḍalya <Adalia (in Turkey)> /n/ common lemon (as distinct from the Egyptian lemon).

ء ط ا ل ى see ء ط ل ى : ʕiṭaali

ء ط ر
إطار ʕiṭaar↑ /n pl -aat/ **1** tyre. *ʕiṭaraat tiyublis* tubeless tyres. **2a** frame. *ʕiṭaar mudhab* gilt frame. **2b** framework, setting. *ʕil-masʕala laazim titfihim fi-ʕiṭar-ha ṣ-ṣaḥiiḥ* the question must be viewed in its proper setting.
أطّر ʕaṭṭar /vt/ *[arch]* to frame, make a border. *ʕaṭṭaru l-ḥeṭaan* they framed the walls with a border. - vn *taʕṭiir*; ava/pva *miʕaṭṭar*.
اتأطّر ʕitʕaṭṭar /vi/ *[arch]* to be framed. - iva *mitʕaṭṭar*.

– ء ط ر ب
أطربنش ʕaṭrabanʃ /n pl -aat/ *[coarse]* large penis, chopper.

– ء ط ر م see – ء ت ر م

ء ط ر ن ج see ء ت ر ن ج

ء ط ر و ن
أطرون ʕaṭruun /n/ natron. - also *naṭruun*.
أطرونة ʕaṭruuna /pl -aat/ unit noun of *ʕaṭruun*.

ء ط ل س ¹
أطلس ʕaṭlas[1] /n pl ʕaṭaalis/ atlas.
أطلسى ʕaṭlasi /adj/ Atlantic. *ʕil-muḥiiṭ ʕil-ʕaṭlasi* the Atlantic Ocean. *ʕil-ḥilf il-ʕaṭlasi* N.A.T.O.

ء ط ل س ²
أطلس ʕaṭlas[2] /n/ satin.

ء ط ل ى
إيطاليا ʕiṭalya /prop n/ Italy. ‖ *ḥarb[i] ʕiṭalya* percussion caps.
إيطالى ʕiṭaali **1** /adj/ Italian. **2** /n */ an Italian.
طليانى ṭalyaani, ṭalyaani /pl ṭalyaan, ṭalyaan, ṭalayna, ṭalayna/ **1** /adj/ Italian. – /n/ **2** an Italian. **3** /no pl/ the Italian language.

– ء ط م ب see – ء ت م ب

ء ع د see ء و د : ʕaɛid

ء ع ز ن
إعزن ʕiɛzinn /conj/ as if. *xallii-na niṭfi n-nuur ʕiɛzinnina miʃ mawgudiin* let's switch off the light, as if we were not in. *ʕiʃtaɤali kwayyis ʕiɛzinni mawguud* work (as) well as if I were here.

ء ع و ق ع
أعوقع ʕaɛuuqaɛ onomatopoeia for the sound of an old car-horn. *ɛarabiyya mhakkaɛa ʕaɛuuqaɛ yaɛni xurda* a worn out 'honk-honk' car, that's to say a wreck.

ء غ ا
أغا ʕaɤa, ʕaɤa <T *ağa*> /n pl -waat, -waat/ *[obsol]* title of palace eunuchs and other high ranking civil and military officials of the Ottoman empire. ‖ *ʕayyaam il-ʕaɤawaat* (the days of the Turks and Mamelukes) ≈ the days of the tyranny.

ء غ ا س see ¹ ص ا غ : *ṣaɤaqul ʕaɤaasi*

ء غ س ط س
أغسطس ʕaɤusṭus /n/ August.

– ء غ م ى
إيغومينوس ʕiɤumeenus <Gr *hêgoumenos*> /n/ *[Chr]* hegumen. - also *hiɤumeenus*.

– ء غ ن س
أغنسطس ʕuɤnusṭis <Gr *anagnôstês*> /n */ *[Chr]* reader of lessons during a service.

– ء ف خ ر
إفخارستيا ʕifxaristiya <Gr *eukharistia*> /n/ *[Chr]* eucharist.

– ء ف ر ت
أفرتيرة ʕufirtiira <perh Fr> /n pl -aat/ *[mus]* overture.

ء ف ر ق
إفريقيا ʔafriqya, ʔifriqya /prop n/ Africa.
إفريقى ʔafriiqi, ʔifriiqi /adj */ African.

ء ف ر ن ج see also ف ر ن ج
أفرنج ʔafrang /pl n/ (western) foreigners, westerners.
أفرنجى ʔafrangi /adj/ European, western-type. *magalla frangiyya* a western magazine. ‖ *ʔit-tariix il-ʔafrangi* the Gregorian system of dating. - *kabineeh ʔafrangi* pedestal lavatory. - *ɛeef ʔafrangi* white bread made in stick-loaves about 30 cm. long. - *furn afrangi* bakery where *ɛeef ʔafrangi*, cakes and biscuits are made and sold. - *gallabiyya frangi* a men's galabiya with turn-down collar and button-up cuffs. - /adverbially/ *da laabis ʔafrangi* he is dressed in western clothes.

(ء ف ر و ل)
أوفرول ʔufarool[1] <Engl> /n/ overhaul (of a vehicle, piece of equipment etc.)
أوفرول ʔufarool[2] <Engl> /n pl *-aat*/ overall.

ء ف ر ى ز
أفريز ʔafriiz /n pl ʔafariiz/ <prob. Fr> **1** frieze. **2** decorated edging (on furniture).

ء ف س ت
أوفست ʔufsit <Engl> /n/ *[print]* offset.

ء ف س ى د
أوفسايد ʔufsaayid <Engl> /adj invar/ *[soccer]* off-side.

ء ف ع see ف ع ى : ʔafɛa

ء ف غ ن
أفغانستان ʔafɣanistaan, ʔafɣanistaan /prop n/ Afghanistan.
أفغانى ʔafɣaani, ʔafɣaani **1** /adj/ Afghan. **2** /n */ an Afghan.

ء ف ف
أفّ ʔuff /interj/ **1** exclamation of exasperation. *ʔuff[i] min di-l-ɛiiʃa* how awful life is! **2** *[coarse]* one of the sounds of pleasure made by a woman during sexual intercourse.
إفّ ʔiff /interj/ exclamation of disgust (especially at a bad smell). *ʔiff[a] ɛar-riiḥa di* what a disgusting smell!
اتأفّف ʔitʔaffif /vi/ to grumble, express anger, displeasure or disgust. - vn *taʔaffuf[i]*; ava *mitʔaffif*.

ء ف ق
أفق ʔufuq[↑] /n pl ʔafaaq/ **1** horizon. *ʔafaaq biɛiida* distant horizons. **2** range of vision. ‖ *raagil waasiɛ il-ʔufuq* a tolerant (broad-minded) man. - *ʔaxuu ʔufuq-u dayyaq* his brother is narrow-minded.
أفقى ʔufuqi, ʔufqi[↑] /adj/ horizontal.
أفّاق ʔaffaaq[↑] /n */ swindler.

ء ف ك ا ت
أفوكاتو ʔavukaatu (also ʔavukaadu[1]) <It *avvocato*> /n pl ʔavukatiyya, ʔavukadiyya/ lawyer, advocate. - also ʔabukaatu, ʔabukaadu.

ء ف ك ا د [1]
أفوكادو ʔavukaadu[2] <Sp *avocado*> /coll n/ avocado tree(s), avocado pear(s). - also ʔabukaadu.
أفوكادوهاية ʔavukaduhaaya /n pl *-aat*/ an avocado pear. - also ʔabukaduhaaya.

ء ف ك ا د [2] see ء ف ك ا ت : ʔavukaadu[1]

ء ف م ى –
أفوميتر ʔavumiitar <Engl *A.V.O. meter*> multimeter.

ء ف ن د –
أفندى ʔafandi <T *efendi*> /n pl *-yya, ʔafandiyyaat*/ **1** Egyptian man in western clothes. **2** title of, and form of address or reference to, an Egyptian man from the middle class. *rafaad ʔafandi* ≈ Mr. Rashad. *ya-fandi* Sir! *ya ʔafandi* or *ya ʔafandii-na* a pompous and condescending form of the preceding. *ʔil-ʔafandi btaaɛ-i* my husband. ‖ *ʔafandii-na* title of the former Khedives of Egypt. **3** title of, and form of address or reference to, a school-teacher.
أفندم ʔafandim <T *efendim*> **1** /n/ **1a** form of address to a middle-class Egyptian of either sex. **1b** *[mil]* form of address to a superior officer. **2** interrogative interjection requesting the repetition of something not properly heard ≈ excuse me? I beg your pardon?

ء ف ن س
أفانس ʔavans <Fr *avance*> /n/ **1** *[elec]* overcharging. **2** *[sport]* lead, head start (with which a weaker player is allowed to begin). *lik fi-kull[i] geem xamas nuqaṭ ʔavans* you can begin each game with five points' lead.

ء ف ى ز
أفيز ʔafiiz /n pl ʔafaayiz/ bonding clip.

ء ف ى س
أوفيس ʕufiis↑ <Fr *office*> /n pl *-aat*/ pantry, servants' room.

ء ف ى ش
أفيش ʕafiiʃ <Fr *affiche*> /n pl *-aat*/ poster.

ء ف ى ن
أفيون ʕafyuun /n/ opium.
أفيونة ʕafyuuna /n/ **1** /pl *-aat*/ unit noun of *ʕafyuun*. ‖ *ʕibn*ⁱ *ʕafyuuna* an opium addict. - *ʕil-ʕafyuuna ʈilɛit ɛalee* he became very ratty. **2** addiction, susceptibility. *ʕil-baḥr*ⁱ *ʕafyuuna ɛandi* the sea is an addiction of mine.
أفيونجى ʕafyungi /n pl *-yya*/ opium addict.
أفين ʕafyin /vi/ **1** to take opium. **2** to fall under the influence of opium. - vn *ʕafyana*; ava *miʕafyin*.

ء ف ى ه
إفيه ʕifeeh <Fr *effet*> /n pl *-aat*/ **1** *[cin]* effect. **2** side (in billiards). *ʕiddii-ha ʕifeeh ʃimaal* put left side on it.

ء ق ت see و ق ت : *muʕaqqat*

ء ق ح و
أقحوان ʕuqḥuwaan↑ /n pl *-aat*/ daisy.

ء ق ق see و ق ق

ء ق ل م
إقليم ʕiqliim↑ /n pl *ʕaqaliim*/ region.
إقليمى ʕiqliimi↑ /adj/ regional.
اتأقلم ʕitʕaqlim↑ /vi/ to become acclimatized. - vn *taʕaqlum*; ava *mitʕaqlim*.

ء ق ن و م
أقنوم ʕuqnuum <Syr> /n pl *ʕaqaniim*/ *[Chr]* any one of the Persons of the Trinity.

ء ق و ن
إيقونة ʕiquuna <Gr *eikôn*> /n pl *-aat*/ *[Chr]* **1** icon. **2** religious medal. - also *ɋuuna*.

ء ك ت ا ف
أكتاف ʕuktaaf <Fr> /n pl *-aat*/ *[mus]* octave.

ء ك ت و –
أكتوبر ʕuktoobar /n/ October.

ء ك ت ى ن
أكتين ʕuktiin <Engl> /n/ *[chem]* octane.

ء ك د [1]
أكادة ʕakaada /n/ astonishment, dismayed incredulity. *ʕamma ʕakaada ɛaleek* what a most unreasonable person you are! - /adverbially/ *ʕil-ʕakaada* amazingly and infuriatingly, as in *ʕil-ʕakaada ʕinnaha bi-tḥaawil tiɤiẓ-ni* the fantastic thing is that she's trying to make me angry, *ʕil-ʕakaada ʕinnu ɤayyar raʕy-u fagʕa* the infuriating thing is that he suddenly changed his mind. ¶ *bil-ʕakaada* /adv/ out of spite, contrarily. *miʃ ḫ-aʃrab bil-ʕakaada fiik* I am not going to drink just to spite you. See further under ك ى د

ء ك د [2]
أكيد ʕakiid **1** /adj/ certain, established. *da xabar ʕakiid* this is certain knowledge. **2** /adv/ for sure, undoubtedly. *ʕakiid ḫa-yiksabu l-ḥarb* there's no doubt that they will win the war.
أكّد ʕakkid **1** /vt/ to verify. *ʕana baaɛit waaḥid yiʕakkid lina l-xabar-da* I've just sent off someone to have this piece of news checked. **2** /vi/ to be emphatic. *ʕakkidi-i-lu ʕinni b-aquul il-ḥaqq* I assured him that I was telling the truth. *ʕakkidtᵃ ɛalee yḫarrar il-istimaraat* I impressed on him that he should fill in the forms. - vn *taʕkiid*; ava *miʕakkid*; pva *muʕakkad*.
اتأكّد ʕitʕakkid /vi/ **1** to be verified. **2** to be certain, be in no doubt. *ʕana mitʕakkid min ḳida* I am certain of that. *laazim nitʕakkid minnu* (1) we must be sure about him. (2) we must make sure by asking him. - vn *taʕakkud*↑; ava *mutaʕakkid*; ava/iva *mitʕakkid*.
استأكّد ʕistiʕakkid↓ /vi/ to be quite sure. *laazim ʕastiʕakkid min innaha kwayyisa* I must be certain it is O.K. - ava *mistiʕakkid*.

ء ك د ى م
أكاديمى ʕakadiimi↑ <perh Fr> /adj */ academic. *dirasaat ʕakadimiyya* academic studies. *raagil ʕakadiimi* an academic, a scholar.

ء ك ر
أكرة ʕukra /n pl *ʕukar, ʕukraat*/ knob or handle (particularly of a door or window). ‖ *bi-ylammaɛ ʕukar* (1) he's an eavesdropper. (2) he's a toady.

ء ك ر ب –
أكروبات ʕakrubaat <perh Fr *acrobatie*> /n/ acrobatics. *laaɛib il-ʕakrubaat* acrobat.
أكروباتى ʕakrubaati /adj */ acrobatic.

(ء ك ر د –)
أكرداش ʕakurdaaʃ <Fr *accordage*> /n/ tuning (of a piano).

أكردير ʕakurdeer <Fr *accordeur*> /n pl *-aat*/ piano-tuner.
أكرديون ʕakurdiyoon <Fr *accordéon*> /n pl *-aat*/ accordion.

ء ك ز ى م
أكزيما ʕikziima, ʕakziima <Engl> /n/ eczema.

ء ك ز ى –
أوكازيون ʕukazyoon <Fr *occasion*> /n pl *-aat, ʕukazyonahaat*/ sale (at reduced prices).

(ء ك س)
أكس ʕaks <Fr *axe*> /n pl *-aat*/ axle.
إكس ʕiks <perh Engl> /fem n, pl *-aat*/ **1** the letter X. **2** *[euphem]* menses. — /masc n/ **3** express (train). — /adj invar/ **4** quick, fast. - /adverbially/ *rawwaḥ ɛal-beet ʕiks* he went home fast.

ء ك س ب –
إكسبريس ʕiksibrees <Engl> /n pl *-aat*/ express (train).

ء ك س ج –
أكسيجين ʕuksijiin <Fr *oxygène*> /n/ oxygen. ‖ *mayyit ʕuksijiin* aqueous solution of hydrogen peroxide.

ء ك س د
أكسيد ʕuksiid <Fr> /n pl ʕakasiid/ oxide.
أكسديه ʕuksideeh <Fr *oxydé*> /adj invar/ oxydized.
أكسد ʕaksid /vt/ to oxydize. ‖ *muxx-i mʕaksid* my brain's a bit rusty. - vn *ʕaksada*; ava/pva *miʕaksid*.
اتأكسد ʔitʕaksid /vi/ to become oxydized. -vn *taʕaksud*↑; iva *mitʕaksid*.

ء ك س ر
إكسرا ʕiksira↓ <perh It *extra*> /adj invar/ first-class. *baṭṭiix ʕiksira* excellent water-melons.

ء ك س س –
أكسسوار ʕaksiswaar, ʕiksiswaar <Fr *accessoires*> /coll n, pl *-aat*/ **1** spare part(s). **2** prop(s) (in theatre etc.). **3** accessory or accessories (in fashion).

(– ء ك س ل)
أكسليتير ʕaksiliteer or ʕiksiliteer <Fr *accélérateur*> /n pl *-aat*/ accelerator.
إكسليفون ʕiksilifoon <perh Fr> /n pl *-aat*/ xylophone.

ء ك س و
أكسو ʕuksu, ʕiksu <Gr *eksô*> /interj/ *[joc]* out with you! run along!

ء ك س ى
أكسى ʕuksi <perh Engl> /adj/ oxy-acetylene.

ء ك س ى ر
إكسير ʕuksiir, ʕiksiir /n pl ʕakasiir/ elixir. *ʕuksiir il-ḥayaah* the elixir of life.

ء ك س ى –
أكسيوس ʕaksiyuus <Gr *aksios* worthy> *[Chr]* **1** /interj/ call repeated three times by Coptic congregations. **2** /n/ action of making such a threefold call.

ء ك ص د –
إكصيدام ʕikṣidaam <poss Fr *contre- accidents*> /n pl *-aat*/ bumper, fender.

ء ك ك و ر
أكور ʕakkoor <Fr *accord*> /n pl *-aat*/ *[mus]* harmony.

ء ك ل
كل، أكل *kal, ʕakal (yaakul)* /vt/ **1** to eat, consume. *nifs-i ʕaakul jilaati ktiir* I feel like eating a lot of ice cream. ‖ *ʕil-ɛarabiyya di b-taakul banziin* this car just eats up petrol. - *kul ɛeef* don't make trouble for yourself! - *ʕana kalt*↓ *maɛ'a ɛeef wi-malḥ* I have broken bread with him, a bond exists between us. - *kal fi-rooḥ-u* to simmer (with pent-up anger etc.). - *kal laḥm(-u)* to exploit (s.o.). - *kal muxx(-u)* to take (s.o.) in, persuade (s.o.) against his better judgement. - *ʕin-naas kalit wiff-u* he was made to feel small. - *kal bi-ɛaql-i ḥalaawa* he sweet-talked me (into s.th.). - *bi-yakul-ha walɛa* he is unscrupulous. - *ʕil-bint*ª *ɛanduku kuluu-ha* you've got the girl; to hell with you and her! - *kal il-bint [coarse slang]* he had the girl. - *ḥa-yaakul ḥitta min ...* it is very becoming to, as in *ʕil-fustaan ḥa-yaakul ḥitta minnaha* the dress suits her extremely well. **2** to eat away, wear down, corrode. *ʕil-ḥagar bi-yaakul il-mayya btaaɛit il-muus* the whetstone wears down the edge of the razor. *ʕil-makwa kalit il-kumm* the iron scorched the sleeve. *ʕil-ɛamiiṣ kal-u l-ɛaraɛ* the shirt was rotted with sweat. *ʕil-baruuma b-taakul iṣ-ṣaag* rust is corroding the iron sheeting. **3a** to appropriate. *bi-yaakul ʕamwaal il-yataama* he takes the orphans' money. ‖ *bi-yaakul maal in-nabi* ≈ he'd sell his own grandmother. - *kal il-gaww* he stole the limelight. - *kal ɛaql-a-ha* he stole her reason. **3b** to take (a piece, in a game). *kal-li faras* he took one of my knights. **4** to cause itching or irritation in. *gism-i b-yakul-ni min mayyit il-baḥr* my body is itching from the sea-water. ‖ *ɛalb-(u) kal-(u)* to be wor-

ried, as in *ʔalb-a-ha b-yakul-ha ʕala-bn-a-ha* she's worried sick about her son. - *ʃiid-(u) kalit-(u) ʕala* to itch to get one's hands on, as in *ʃid-ha b-takul-ha ʕalee* she's itching to hit him, *ʃiid-u b-takl-u ʕal-filuus* he's itching to get his hands on the money. **5** to be taken in by. *ma-b-akul-f*^{i} *min fuxl il-bulitiika btaʕit-kum* I won't swallow any of your cant. **6** to do (s.o.) down, put one over on (s.o.). *kal-ni fil-filuus* he did me down over the money. **7** to sustain (a blow etc.). *kal ʕalʔa* he received a hiding. *kal maʔlab* he had a dirty trick played on him. **8** to subject (s.o.) to. *kalit-u ʔalameen* she gave him a slapping. — /vi/ **9** to take bribes. - vn *ʃakl, ʃakalaan*; ava *waakil*; pva *maʃkuul*.

¶ *kal ʕala* to swindle (s.o.) out of. *kal ʕalayya gneeh* he swindled me out of a pound.

أكل *ʃakl* /n/ **1** /vn/ ‖ *ʃakl*^{a} *ʕeef* earning one's daily bread, livelihood. - *bitaaʕ ʃakl* one who accepts bribes. **2** food. ‖ *ʃakl*^{i} *w-marʕa w-ʔillit ʂanʕa* ≈ a life of ease, the life of Riley. **3** cards (in any card game) that can be picked up.

أكلة *ʃakla* /n pl *-aat*/ a meal.

أكلان *ʃakalaan* /coll n/ bedbug(s).

أكلانة *ʃakalaana* /unit n, pl *-aat*/ a bedbug.

مأكولات *maʃkulaat* /pl n/ foodstuffs.

أكلتى *ʃaʔkalti* /adj pl *-yya*/ unscrupulous.

أوكل *ʃawkal* /el/ more/most delicious or palatable.

أكّال *ʃakkaal* /n pl *ʃakkaliin, ʃakkaala*/ **1** gourmet. ‖ *ʈaab wi-stawa w-ʈalab il-ʃakkaal* it has ripened and calls for the eaters! (fruit vendor's cry). **2** one who takes bribes.

أكّيل *ʃakkiil* /n pl *ʃakkiila*/ one who enjoys eating, gourmand.

أكّل، وكّل *ʃakkil* or *wakkil*^{1} /vt/ **1** to feed. *b-aʃakkil-hum ʃaḥsan ḥaaga* I feed them the best there is. **2** to subject (s.o.) to. *ʃakkilt-u xazuuq* I played a trick on him. **3** to bribe. *ʃakkili-u ʕaʃaan yiʈallaʕ il-waraʔa* I bribed him to issue the document. **4** to take (a card) with a similar one (in card games). - vn *taʃkiil*; ava *miʃakkil, miwakkil*.

اتأكّل *ʔitʃakkil* = *ʔitwakkil*^{1}. - iva *mitʃakkil*.

اتوكّل *ʔitwakkil*^{1} /vi/ passive of *wakkil*^{1}. - iva *mitwakkil*.

آكل *ʃaakil* /vt/ to share food with. *ʔaʕad yiʃakil-ha wi-ykallim-ha li-ʏaayit ma wiṣlu maṣr* he kept her company with food and conversation until they reached Cairo. - vn *miʃakla*; ava *miʃaakil*.

اتآكل *ʔitʃaakil* /vi/ **1** to corrode, wear away. **2** to be partnered in eating. ‖ *raagil ma-yitʃakil-f* a man with no table manners. - vn *taʃaakul*↑; iva *mitʃaakil, mutaʃaakil*↑.

اتّاكل *ʔittaakil* /vi/ **1** to be eaten, be consumed. **2** to be eaten away, be worn down, be corroded. **3a** to be appropriated. **3b** to be taken (of a piece, in a game). **4** to be fooled, be taken in. - iva *mittaakil*.

ء ك ل ر –

إكليريكى *ʔikliriiki* <Gr *klêrikos*> **1** /adj */ *[Chr]* pertaining to the priesthood, clerical. *kulliyya ʔiklirikiyya* theological seminary. **2** /n */ student in or graduate of a theological seminary.

ء ك ل ش –

أكلشيه *ʔaklaʃeeh* <perh Fr> /n pl *-aat*/ *[print]* cliché.

ء ك ل ى –

إكليرس *ʔikliirus* <Gr *klêros*> /coll n/ *[Chr]* clergy.

ء ك ل ى ل see ك ل ل[1] : *ʔikliil*

ء ك م

أكم *ʔakam* /part/ exclamation of wonder ≈ how much! how many! *wi-ʔakam min iʃ-ʃitiima di* how much of this sort of name-calling (I have to put up with)!

ء ك م ن ن

إكمنّ *ʔikminn* /conj/ because, since. *bi-yʏiir minni ʔikminni ngiḥt* he's jealous of me because I passed (the exam). *ʔana b-asʔal ʕalee ʔikminnu ma-rgiʕ-ʃ il-beet* I am asking about him because he hasn't come home.

ء ك ن ن

أكنّ *ʔakinn* /conj/ as if, as though. *ʔakinnu miʃ hina* as though he weren't here.

أكنّت *ʔakinnit-* /conj, with pron suff/ as if, as though. *ʕamal ʔakinnitu ma-smiʕ-ʃ* he pretended that he didn't hear.

ء ك و ا ر

أكوارى *ʔakwaari*: *gild*^{i} *ʔakwaari* buffalo hide.

ء ك و ن see ء ق و ن

ء ك ى ا ب

إكياب *ʔikyaab* /n/ reed mats.

ء ل

ال *ʔil-* /def art; total assimilation of *l* to foll 'sun letters', as well as usu *g* and *k*; usu elision of hamza in context/ the.

ء ل ا
إلى ʕila /prep; w pron suff ʕilee- (1st sing ʕilayya)/ **1** to, towards. *ʕin-naas tunẓur ʕilee bi-ɛeen il-iḥtiraam* the people regard him with respect. *ɋalb-i mayyaal ʕileek* my heart is attracted to you. ‖ *wi-maa ʕila zaalik* and the like, as in *ʕir-rafwa wil-fasaad wi-maa ʕila zaalik* bribery, corruption and the like. **2**↑ to, until. *ʕila l-ɛaṣr il-ḥadiis* until the modern period. *naql il-loon ʕila l-ɋumaaʃ* the transference of the colour to the cloth. *min ... ʕila ...* from ... to ..., as in *laxxaṣ min ṣafḥit tamanya ʕila ɛaʃara* summarize pages eight to ten, *min sitta ʕila xamastaaʃar fil-miyya* from six to fifteen percent. ‖ *ʕitwaffa ʕila raḥmit illaah* he died (and went) to (rest in) God's mercy. - *ʕil-ʕamr[i] ʕileek ya rabb* I submit to you, O God.
¶ *ʕila ʕaxr-u* et cetera.

ء ل ا ج
ألاج ʕalaag <T *alaca*> /n/ thick glossy striped material made of cotton and silk.
ألاجة ʕalaaga /n pl *-aat*/ **1** unit noun of *ʕalaag*. **2** kaftan made of *ʕalaag*. — /no pl/ **3** elegance, chic. *laabis ʕaaxir ʕalaaga* very well dressed. *gaww[i] ʕaaxir ʕalaaga* a very chic atmosphere.

ء ل ا ى
ألاى ʕalaay <T *alay*> *[mil]* regiment. *ʕamiiralaay, miralaay* see ء م ر [1]

ء ل ب
ألّب ʕallib /vt/ to incite. *ʕallib ɛalayya n-naas* he set people against me. - vn *taʕliib*; ava *miʕallib*.

ء ل ب س –
ألباستر ʕalabastar /n/ alabaster.

ء ل ب ن ض
ألبنضة، ألبندة ʕalabanḍa <perh T *alabanda*> /n/ smooth talk, bravado. *ɛamal ɛalee ʕalabanḍa* he put one over on him. *bitaaɛ ʕalabanḍa* a glib fellow.

ء ل ب و م
ألبوم ʕalbuum <Engl> /n pl *-aat*/ album. *ʕalbuum ṣuwar* photograph album.

ء ل ت
ألّت ʕallit /vi/ to make fun, laugh (at s.o.). *baṭṭal tiʕallit ɛalee* stop making fun of him. - vn *taʕliit*; ava *miʕallit*. See further under م ء ل ت

اتألّت ʕitʕallit /vi/ **1** = *ʕallit*. **2** (impersonal) passive of *ʕallit*. *ʕana miʃ min illi b-yitʕallit ɛaleehum* I am not the type to be laughed at. - ava/iva *mitʕallit*.

ء ل ج see ء ل ا ج: *ʕalaag, ʕalaaga*

ء ل ج ى
أولوجيّة ʕawlugiyya, ʕulugiyya <Gr *eulogia*>: *luqmit il-ʕulugiyya [Chr]* blessed bread.

ء ل س
ألّس ʕallis /vi/ to behave or speak disparagingly. *yiḥibb[i] yʕallis ɛala n-naas* he likes to tell disparaging tales about people. - vn *taʕliis*; ava *miʕallis*. see further under م ء ل س
اتألّس ʕitʕallis /vi/ **1** = *ʕallis*. **2** to be made fun of, be disparaged. - ava/iva *mitʕallis*.
اتآلس ʕitʕaalis = *ʕitʕallis*. - ava/iva *mitʕaalis*.

ء ل س ط
أليسطه ʕalisṭa <perh T *aleste*> /adj invar/ excellent, tip-top. *fuxl[i] ʕalisṭa* fine work. *raagil ʕalisṭa* an excellent man. *ʕil-ʕakl istawa w-baqa ʕalisṭa* the food was cooked to perfection.

ء ل ف [1] see also ل و ف [1] and و ل ف [1]
ألف ʕilif(a), ʕalaf(a) /vt/ to get used to, be on intimate terms with. *kull[i] waaḥid bi-yiʕlaf illi zayyu* everyone likes his own kind. - vn *ʕilf, ʕulf, ʕulfa*; ava *ʕaalif*; pva *maʕluuf*.
ألفة ʕulfa /n/ intimacy. *benhum ʕulfa* they're intimate.
ألوف ʕaluuf /adj */ intimate, sociable.
أليف ʕaliif **1** /adj/ tame. **2** /n pl *ʕullaaf*/ sweetheart, darling.
ألّف ʕallif[1] /vt/ **1** to form. *ʕallif il-wizaara taḥt[i] ryast-u* he made up the cabinet under his leadership. **2a** to write. *huwwa bi-yʕallif fil-iqtiṣaad* he writes on economics. *ʕil-waaḥid laazim yiʕallif-lu ktaab yitraqqa bii* one has to write a book that will get one promoted. **2b** to compose (lyrics, music etc.). **3** to concoct, make up. *ʕallif-lu ʕayy[i] sabab* make up any old reason for him! - vn *taʕliif*; ava *miʕallif*.
مؤلّف *muʕallif* /n */ **1** author. **2** composer.
مؤلّف *muʕallaf*↑ /n pl *-aat*/ **1** literary work. **2** musical composition.
اتألّف ʕitʕallif /vi/ passive of *ʕallif*. - iva *mitʕallif*.
اتآلف ʕitʕaalif↑ /vi/ to become good friends, become intimate. *fil-muɛaskar iʃ-ʃubbaan bi-yitʕalfu w-yiɛrafu baɛḍ* at camp the young people become friends and get to know one another. - vn *taʕaaluf*; ava *mitʕaalif*.

ء ل ف [2]
ألف ʔalf 1 /num, pl ʔalaaf/ a thousand. *ʔalf[i] w-tultumiyya* one thousand three hundred. *xamast alaaf* five thousand. 2 /n pl *ʔalaaf, ʔuluuf*, pl of abundance *ʔalafaat*/ (unit of a) thousand. *ʔalaaf* (or *ʔuluuf*) *in-naas* thousands of people. *rubɛumiyya mil-ʔalf* four hundred in a thousand. ‖ *ʔalf[i] waraaha ʔuluuf* ≈ money breeds money. 3 *ʔil-ʔalf* /adj invar/ the thousandth.
ألفى ʔalfi /adj */ millennial. *ʔil-ɛiid il-ʔalfi* the millennial anniversary.
ألفيّة ʔalfiyya /n pl *-aat*/ 1 poem of a thousand distiches. 2 (also *ʔalfawiyya*) prayer string of ninety-nine beads.
ألفاوى ʔalfaawi /adj/ millenial.
ألفويّة ʔalfawiyya[1] /n pl *-aat*/ 1 (also *ʔalfiyya*) prayer-string of ninety-nine beads. 2 thousandfold recitation of the *fatḥa* (q.v.)
ألف ʔalif /fem n/ 1 first letter of the Arabic alphabet. *ʔil-ʔalif bih* the alphabet. ‖ *zayy il-ʔalif* orderly, like clockwork. - *ʔil-ʔalif tigurr il-bih* one thing leads to another. - *la yiɛraf il-ʔalif min il-madna* (or *min kuuz id-dura*) he's illiterate. 2 *[chem]* symbol for oxygen.
ألّف ʔallif[2] /vi/ to reach a thousand. *bi-yitqaal ʔinn is-sikooya ʃagara miɛammara bi-tʔallif* it is said that the sequoia is a tree that lives a thousand years! - vn *taʔliif*; ava *miʔallif*.
متلّف *miʔallif* /adj */ extremely aged, as old as Methuselah.

ء ل ف [3]
ألفة ʔalfa <perh T *kalfa*> /n pl *-waat*/ monitor (in a school class).
ألفويّة ʔalfawiyya[2] /n/ rank of monitor, monitorship.

ء ل ف ر –
ألفرنكة ʔalafranka, ʔalafranka <prob It *alla franca*> 1 /adj invar/ Western-like. *ɛamliin zayy in-naas il-ʔalafranka* they behave like western people. 2 /n/ Western style (of behaviour, dress etc.). *qulu-lha tbaṭṭal fuʕl il-ʔalafranka* tell her to stop behaving like a westerner (or in the western style).

ء ل ف ن س
ألفونس ʔalfuns <prop n *Alphonse*> /coll n/ Alphonse mango(es). - also *funs*.

ء ل ك ت –
إلكترون ʔiliktiroon <Engl> /n pl *-aat*/ electron.
إلكترونى ʔiliktirooni /adj/ electronic.
إلكترونيّات ʔiliktironiyyaat /pl n/ electronics.

ء ل ك ز –
ألكزندرين ʔalikzandiriin /n/ alexandrite.

ء ل لِ
إلّ ʔill <Engl *L*> /adj invar/ L-shaped.

ء ل ل ا [1]
إلاّ ʔilla[1] 1 /prep/ except, but. *ma-bi-yḥibb[i]-f ʔilla nafs-u* he loves nobody but himself. *ma-fii-f balad bi-tiṣrif lil-muwaẓẓaf ik-kibiir ɛarabiyya ʔilla ʔiḥna* we're the only country that gives cars to top officials. 2 particle signalling **2a** a rhetorical question that imputes ingenuousness to the previous speaker. *ʔilla miʃ fahmaa-k* what do you mean, she doesn't understand you (of course she does)? *maṣlaḥt-u ʔeeh*. - *ʔilla ʔeeh* 'What is his interest?' 'Surely you don't have to ask what (that is)!' *ʔilla ʔana raayiḥ feen* what do you mean, where am I going (you know very well)? **2b** a sudden and unexpected development. *ʔilla yiggawwiz* of all things, he should go and get married! *w-ana ɑaaɛid fil-beet ʔilla wi-ṭabb[i] ʔabuu-ha w-ʔaxuu-ha* while I was sitting in the house, lo and behold her father and brother suddenly appeared!
¶ *ʔilla wi-* /conj/ (1) except that, as in *m-amfii-f ʔilla w-maɛaaya munfaax* I never go off without a bicycle pump. (2) that (in contexts of oaths), as in *ḥilif bi-yamiin iṭ-ṭalaaq ʔilla w-yibṭaḥ nafuux il-ḥakam* he swore by an oath of divorce that he would smash the referee's head. - *ʔilla ʔiza* /conj/ unless, as in *miʃ mumkin tirawwaḥ ʔilla ʔiza kaan il-mudiir miwaafiq* you can't go home unless the director agrees. - *ḥakam ʔilla* to insist, as in *ʔumm-u ḥakamit ʔilla yruuḥ il-madrasa* his mother insisted that he go to school.
ألاّ ʔalla /interj/ now then, come on. *ʔalla qul-li ʔeeh raʔy-ak fil-mawḍuuɛ* come! tell me your opinion on this subject.

ء ل ل ا [2] see ء ل ه : *ʔalla, ʔilla*[2]

ء ل ل ا و see ء ل ه : *ʔallaawi*

ء ل ل ت ى
اللّتى ʔillati feminine relative pronoun: *bi-llati ʔaḥsan* (by the better way) ≈ or else! as in *ṭallaɛ il-filuus bi-llati ʔaḥsan* hand over the money or else!

ء ل ل ذ ى see ء ل ل ز ى

ء ل ل ز ى
الّذى ʔillazi masculine relative pronoun: *wi-llazi minnu*

and so on, as in *ʕif-faay wig-gurnaan wi-llazi minnu* the tea and the paper and so on.
الّذين *ʕillaziina* plural relative pronoun: *ʕibn illaziina* /fem *bint illaziina*, pl *wilaad illaziina*/ ≈ son of a ...!

ء ل ل ى
اللى *ʕilli* /rel pron/ **1** who, which, that. *ʕis-sitt illi sakna ɛan-naṣya* the woman who lives on the corner. *ʕik-kursi lli waaqif ɛalee il-ɛayyil* the chair that the child is standing on. ‖ *ʕiza kaan ṣaḥb-u ʕilli huwwa ṣaḥb-u miʃ ɛaawiz yisaɛ̣d-u* if his own friend won't help him .... *ʕiza kaan il-mudarrisiin illi humma mudarrisiin ma-yiqdaruu-ʃ yigawbu l-imtiḥaan* if the teachers themselves can't answer the exam .... **2** whoever, whichever, whatever. *ʕilli ʕana ɛawz-u ʕaruuḥ ʃayl-u* whatever I want, I take. *ʕis-sagaayir dool bituuɛ miin. - li-lli yiʃrab* 'Whose are those cigarettes?' 'They're for whoever wants to smoke.' *ʕilli lu ḍahr[i] ma-yinḍirib-ʃ[i] ɛala baṭn-u [prov]* ≈ he who has a backer comes to no harm. ‖ *ya-lli hina* ≈ anyone at home? -/eliptically/ *ʕilli xad ig-gurnaan bitaaɛ-i ygiib-u. - ʕilli.* 'Whoever took my paper, give it back.' 'Whoever (took it is not I).' **3** /w conj function/ seeing that, since. *ʕil-ḥaqq[a] ɛalayya ʕilli ṭawiɛt-ak* it's my fault for obeying you. *ʕana ʕuʃkar illi qaddimt-ak lu* I should be thanked, since I introduced you to him. ‖ *kamaan illi* despite the fact that, as in *qaal bi-yiʃtim-ni kamaan illi xadt-u maɛaaya* just imagine, he's insulting me, even though I took him with me!
¶ *ʕilli ma* expression of incredulity at the non-appearance or non-occurrence of something. *ʕilli ma ʃaayif sawwaaq* incredible that there is no driver anywhere. *ʕilli ma ḥadd[i] ga zar-na* would you believe it - not a single person came to visit us!

– ء ل ل ى
ألالينا *ʕalaliina* <perh It *anilina*> /n/ furniture-staining fluid. - also *ʕanaliina*.

ء ل م
ألم *ʕalam* /n pl *ʕalaam*/ pain. ‖ *ʕusbuuɛ il-ʕalaam [Chr]* Holy Week.
اليم *ʕaliim* /adj/ painful.
اتألّم *ʔitʕallim* /vi/ to experience pain. - ava *miʔtallim*.
آلم *ʕaalim* /vt/ to hurt, cause pain to. *ʕil-garḥ[i] bi-yʕalim-ni ktiir* the wound causes me great pain. *yaama ʕalim-ha b-kalaam-u l-gaariḥ* how often he hurt her feelings with his sharp words. *bi-zyaada miʕalma liina b-taṣarrufaat-ik il-bayxa* you've hurt us enough with your stupid behaviour. - vn *miʕalma↓*; ava *miʕaalim*.

مؤلم *muʕlim* /adj */ painful.

ء ل م ا ظ
ألماظ *ʕalmaaẓ* <P *almâs*> /coll n/ diamond(s). *ʕir-raagil da ḥittit ʕalmaaẓ* that man is a gem of a fellow. ‖ *kalaam-u zayy il-ʕalmaaẓ* you can trust his word.
ألماظة *ʕalmaaẓa* /n pl *-aat*/ **1** /unit n/ a diamond. **2** glazier's glass cutter. – /no pl/ **3** /prop n/ Almaza, an area of Cairo to the north-east of Heliopolis, the site of Cairo's first airport.
ألماظيّة *ʕalmaẓiyya* /n/ jelly-like sweet dish consisting of starch, sugar and flavouring.

ء ل م ن
ألمانيا *ʕalmanya* /prop n/ Germany.
ألمانى *ʕalmaani, ʕalmaani* /pl *ʕalmaan, ʕalmaan*/ **1** /adj/ German. *ʕil-ḥaṣba l-ʕalmaani* German measles. – /n/ **2** a German. **3** /no pl/ the German language.

ء ل م ن ى
ألمونية *ʕalamunya* <It *alluminio*> /n/ aluminium, aluminum. *silk il-ʕalamunya* wire for scouring pots and pans.

ء ل ن see ء ا ل[3]: *ʕilaan*

ء ل ه
إله، إلاه *ʕilaah* /n pl *ʕaalíha*/ deity, god, specifically a pagan deity. *ʕaalíhit il-faraɛna* the gods of the Pharaohs. *ʕeeh it-tagabbur da - huwwa-nta ʕilaah* what's the meaning of all this bluster? do you think you're a god? ‖ *laa ʕilaaha ʕilla llaah* there is no god but God (the first part of the Muslim profession of faith, used as a response to, e.g., *waḥḥid allaah* or *waḥḥiduu* or *ʕamint[i] bi-llaah*, qq.v.). - *ʕilaah-i ynakkid ɛaleek* ≈ a plague on you!
¶ *ʕilaah-i* a formulaic exclamation of appeal to God. *ya ʕilaah-i* oh my God! *ʕilaah-i tirgaɛ saalim li-ɛyaal-ak [beggars]* please God may you return safe to your children!
إلاهى *ʕilaahi* /adj/ divine. *ʕis-sirr il-ʕilaahi* (1) the divine mystery. (2) breath of life, soul, as in *ʕis-sirr il-ʕilaahi ṭiliɛ* ≈ he gave up the ghost, he died.
الله *ʕallaah* /n; also *ʕallaahu, ʕallaahi, illaah* and *ʕillaahi* following the inflexion patterns of classical Arabic, with the variants *ʕalla* and *ʕilla*[2] in some contexts/ the one God, Allah. *ʕallaahu ʕakbar* God is most great. *ʕil-ḥamdu li-llaah* praise be to God. ‖ *ʕallaah* or *ʕallaah ɛala* an exclamation of delight, as in *ʕallaah ɛala g-*

gaww God, what lovely weather! *ʕallaah ʃin-noom laziiz* God, how nice it is to sleep! - *w-allaahi* (or *w-alla)* by God! a mild oath used (1) to lend emphasis to a request, statement or question, as in *min faḍl-ak w-allaahi* please! I beg of you! *w-allaahi* (or *w-alla) miʃ ɛaarif* I really don't know, *w-allaahi* (or *w-alla) ma-na raayiḥ* I most certainly will not go! *w-allaahi* (or *w-alla) ma-ḥadd[1]-ʃ yistaahil kida* certainly, no one deserves such treatment! *ʃay w-alla* (or *w-allaahi*) yes indeed! *ḥa-ysaafir amriika, - w-allaahi* 'He's going to America.' 'Really?' (2) to introduce an inferential conclusion, as in *w-allaahi* (or *w-alla) baqa da kull[1] waaḥid wi-zooq-u* well, then it's a matter of each to his own taste. - *li-llaah ya muḥsiniin [beggars]* (charity) for the sake of God, you charitable people! - *li-llaah fi-li-llaah* for no reason, for nothing, as in *ʃatam-ni li-llaah fi-li-llaah* he called me names for no reason. - *ɛal-alla* formula used (1) when refusing alms to a beggar ≈ God will provide! (2) to imply misgiving about an outcome, as in *bi-yquulu ḥa-yibnu-lna wiḥda ʂiḥḥiyya.* - *ɛal-alla* 'They say they'll build us a medical centre.' 'Let's hope so.', *ɛal-alla baqa yzaakir* let's just hope he studies, *ɛal-alla ma-tiddii-ʃ lil-quradaati ʧirf* just you wait and see what'll happen if you don't give the monkey-man a piastre! - *ya-hl-alla ya-lli hina* is anyone at home? - for other formulaic phrases (e.g., *ʃaɛuuzu bi-llaah*), see under their other components. see also under *ʃalla.*

اللّه *ʃalla* (also *halla[1]*) /interj/ exclamation of surprise or dismay. *ʃalla gara ʃeeh* Heavens, what's happened!? *ʃalla ʃalla* ... what's all this! see also under *ʃallaah.*

اللاّوى *ʃallaawi* **1** /adj */ *[deris]* sanctimonious. **2** /adv/ without paying, for nothing.

اللّهمّ *ʃallahumma* O God! *ʃallahumma ʃiggal-u xeer* ≈ pray God all turns out well! (said after laughing or dreaming or a bad premonition). *ʃallahumma ṭawwil-ik ya rooḥ* ≈ God give me patience! *ʃallahumma dim-ha niɛma* may God perpetuate His bounty (said, e.g., after eating). *ʃallahumma ḥfaẓ-na* God keep us! (said in the presence of danger or in face of meanness). *ʃallahumma la-ɛtiraaḍ* a formula used to disclaim any blasphemous intent in criticising God's work, as in *ʃir-raagil da mɛarraṣ ʃallahumma la-ɛtiraaḍ* the man's a swine, but God knows best!

¶ *ʃallahumma ʃilla* except for. *ʃaḍul-lak ʃinnu ɛumr-u ma ɛiyi ʃallahumma ʃilla ʃwayyit ʃinfilwanza* I tell you he's never been ill, except for a slight attack of influenza. - *ʃallahumma ʃinn* as God is witness, as in *ʃallahumma ʃinni ṣaayim* (no,) by God, I am fasting (said when tempted to do something in Ramadan contrary to the observance of the fast, e.g., gossiping).

ء ل و ه

آلو *ʃalooh, ʃaluuh, ʃalu* <Fr *allô*> /interj/ hello! (in answering the telephone).

ء ل ى

ألية *ʃalya, ʃilya* /n pl *-aat, ʃaly, ʃily/ [anat]* buttock. *ḥuqna fil-ʃalya* an injection in the buttock. ‖ *ʃabu ʃalya [abus slang]* (one with a) fat arse.

ء ل ى ا ز

الإلياذة *ʃil-ʃilyaaza* (also *malḥamit il-ʃilyaaza*) /n/ the Iliad.

ء م ب ا

أنبا *ʃamba* <Copt> /n/ title of Coptic patriarchs, bishops and metropolitans.

ء م ب ا ب

إمبابة *ʃimbaaba* /prop n/ Embaba, a northern suburb of Guiza on the bank of the Nile.

إمبابى *ʃimbaabi* /pl *-yya/* **1** /adj/ of or pertaining to Embaba. **2** /n/ one from Embaba.

إمباباوى *ʃimbabaawi* /pl *-yya/* = *ʃimbaabi.*

ء م ب ا ش

أونباشى *ʃumbaaʃa, ʃumbaaʃi* <T *onbaşı*> /n pl *-yya/ [mil, obsol]* corporal (later *ɛariif*). *wakiil ʃumbaaʃa* lance-corporal.

ء م ب ا –

إمبارح *ʃimbaariḥ* **1** /adv/ yesterday.. *ma-raḥit-ʃ imbaariḥ* she didn't go yesterday. **2** /n/ yesterday. *ʃatraak ʃimbaariḥ* the Turks of yesterday.. ‖ *ʃibn imbaariḥ* ingenuous man, naive man. - *ʃawlaad ʃimbaariḥ* the young. - *ʃawwil ʃimbaariḥ* the day before yesterday. - *ʃawwil ʃawwil ʃimbaariḥ* three days ago.

[1] ء م ب ر –

أمبراطور *ʃimbraṭoor, ʃambraṭoor* <perh It *imperatore*> /n pl *ʃabaṭraʔ*/ emperor.

أمبراطورة *ʃimbraṭoora, ʃambraṭoora* /n pl *-aat/* empress.

أمبراطورى *ʃimbraṭoori, ʃambraṭoori* /adj */ imperial.

أمبراطوريّة *ʃimbraṭoriyya, ʃambraṭoriyya* /n/ empire.

[2] (ء م ب ر –)

إمبريال *ʃimbiryaal* <Fr *impérial*>: *goox imbiryaal* best quality baize.

أمبراس ʕambaraas <Fr *embrasse*> /n pl *-aat*/ decorative tasselled cord used for looping back a curtain.

ء م ب ل
أمبليه ʕambaleeh <Fr *emballer*> /n/ *[auto]* revving. *ʕiddii-ha ʕambaleeh* rev her up!

ء م ب و ل
أمبولة ʕambuula <Fr> /n pl *-aat*/ ampule.

ء م ب و ن
أمبون ʕambuun <Gr *ambôn*> /n/ *[Chr]* pulpit (of wood or marble).

ء م ب و ه
أمبو ʕumbuuh <Copt> *[children]* **1** /n/ any drink, but especially water. **2** /interj/ offer of, or request for, the same.

(ء م ب ي ر)
أمبير ʕambeer <Fr *ampère*> /n pl *-aat*/ **1** *[elec]* **1a** ampere, **1b** amperage. **1c** ammeter. **2** gauge. *ʕambeer il-banziin* fuel gauge. *ʕambeer is-surʛa* speedometer.
أمبير ʕambiir <Fr *empire*> /adj invar/ Empire-style (of dress etc.).

ء م ت ا
إمتى ʕimta **1** /interrog adv/ when? *ʕaagi ʕimta* when shall I come? *ḥaṣal ʕimta* when did it happen? **2** /pron/ when. *ʛul-lu yiigi ʕimta* tell him when to come.

ء م ت س –
أموتسير ʕamutseer <Fr *amortisseur*> /n pl *-aat*/ *[auto]* shock-absorber.

ء م د
أمد ʕamd /n/: *daftar il-ʕamd[i] wir-rafd [mil]* register of incoming and departing soldiers.

ء م ر [1]
أمر ʕamar *(u)* **1** /vt/ to order, give orders to. *rabb-i-na ʕamar muusa bii* Our Lord ordered Moses to do it. **2** /vi/ to order, command. *ʕiḥna fil-xidma - ʔuʕmur* (or *tuʕmur) bass* we're at your service - just say the word. *lamma rabb-i-na yuʕmur* when God wills. - vn *ʕamr*; ava *ʕaamir*; pva *maʕmuur*.
أمر ʕamr[1] /n pl *ʕawaamir*/ command, order. *ʕamr-ak* just as you wish! *taḥt[i] ʕamr-ak* (I'm) at your disposal. *bi-ʕamr illaah* God willing. *ʕawaamir ʕidariyya* administrative rulings. *ʕamr[i] dafʛ* and *ʕamr[i] ṣarf* payment order. ‖ *ḥaakim bi-ʕamr-u* absolute ruler. - *ʔiza garaa-li ʕamr allaah* ≈ if I should die.
مأمور ma*ʕmuur* **1** /pva/ ‖ *ʕana ʛabd il-maʕmuur* I just carry out orders. **2** /n pl *maʕaamiir*/ **2a** police officer in charge of an *ʛism* or a *markaz*. **2b** official in charge of a district branch of a governmental body. *maʕmuur ḍaraayib* local tax inspector. **3** manager (of an estate), bailiff.
مأموريّة *maʕmuriyya* /n pl *-aat*/ **1a** district branch of a governmental body. *maʕmuriyyit ḍaraayib gardin siti* the Garden City Office of Inland Revenue. **1b** position of being in charge of such a branch. **2a** office or position of an estate manager. **2b** area under the supervision of an estate manager. **3** chore, errand, assignment.
إمارة ʕimaara /n/ **1** overbearing behaviour, bossiness. **2** /pl *-aat*/ emirate.
أمير ʕamiir /pl *ʕumara, ʕamaara*/ **1** /n/ prince. *ʕamiir if-fuhada* Prince of the Martyrs (St. George). *law ʕana ʕamiir wi-nta ʕamiir miin yisuuʛ il-ḥimiir [prov]* if I'm a prince and you're a prince who'll be left to drive the donkeys? ‖ *ʕamiir biḥaar* highest rank in the Egyptian Navy. - *ʕamiir baḥr* second-highest rank in the Egyptian Navy. **2** /adj/ kind-hearted, pleasant, obliging. *da gadaʛ ʕamiir* he's a good-hearted chap.
أميرة ʕamiira /n pl *-aat*/ princess.
أميرى ʕamiiri /adj/ *[obsol]* governmental. *ʕil-madaaris il-ʕamiriyya* the state schools. - also *miiri*.
أمير ألاى ʕamiiralaay (also *miralaay*) /n pl *-aat*/ *[obsol]* ranks in the Egyptian Army and Navy approximately corresponding to lieutenant-general and captain respectively.
اتأمّر ʔitʕammar /vi/ to behave bossily. *ʔil-muwaẓẓafiin bi-yitʕammaru ʛag-gumhuur* the officials push the public around. - ava *mitʕammar*.
مؤتمر *muʕtamar* /n pl *-aat*/ conference.
استمارة ʔistimaara /n pl *-aat*/ official form. ‖ *ʔistimaarit ʛumaaʃ* a form on presentation of which a government employee can buy goods (originally cloth) from a government store against his salary.

ء م ر [2]
أمر ʕamr[2] /n pl *ʕumuur*/ affair, matter, case (especially one's personal case or the set of circumstances in which one finds oneself). *ḥaaga maʛruuf ʕamr-a-ha* a matter of common knowledge. *ma-lii-ʃ fi-ʕumuur mash ig-goox di* I have nothing to do with this toadying business. *ʕana miḥtaar fi-ʕamr-u* I can't make him out.

‖ *ʕamr-i* (or *ʕamr-i-na) li-llaah* ≈ I give up, let matters run their course (indicating resignation). - *waliyy*^{i} *ʕamr [leg]* guardian. - *ʕamaam il-ʕamr il-waaqiʕ*↑ faced with a *fait accompli*. - *maxluub ɛala ʕamr-u* having his hand forced, helpless. - *ʕamr-ak xariib* you are a curious man!

أمارة *ʕamaara* /n pl *-aat*/ **1** evidence, indication. *ɛala wiff-u ʕamaraat it-taqwa* his face bears the marks of piety. **2** (verbal) sign, token (as evidence of good faith). *ʕiddii-ni ʕamaara ɛaʃaan if-faxxaala tirda tdaxxal-ni faqqit-ak* tell me what to say to the maid so that she will (know I'm not an impostor and) let me into your flat. *bi-ʕamaarit ma* (or *wi-bil-ʕamaara) kuntu ɛand*^{i} *ʕaxuu-ya mbaariḥ* as evidence (that I have really been to see him, I know from my brother that) you were with him yesterday.

مؤامرة *muʕamra* /n pl *-aat*/ plot, conspiracy.

اتآمر *ʕitʕaamar* /vi/ to plot, conspire. - ava *mitʕaamir*.

ء م ر ك

أمريكا *ʕamriika, ʕamirika* /prop n/ America.

أمريكى *ʕamriiki* /adj/ American.

أمريكانى *ʕamrikaani* /pl *ʕamrikaan*/ **1** /adj/ American. ‖ *gild*^{i} *ʕamrikaani* thick leather of good quality. - *baar ʕamrikaani* a built-in bar in a house. - *ɛamiiṣ ʕamrikaani* a casual shirt. **2** /n/ an American.

اتأمرك *ʕitʕamrak, ʕitʕamrik* /vi/ *[deris]* to adopt what are thought to be American manners. - vn *ʕamraka*; ava *mitʕamrik*.

استأمرك *ʕistiʕamrik* /vi/ *[deris]* to ape the Americans. - ava *mistiʕamrik*.

ء م ر ل – see ء م ر [1]: *ʕamiralaay*

ء م ش ى ر

أمشير *ʕamʃiir* <Copt> /prop n/ Amshir, the sixth month of the Coptic year (early February to early March). ‖ *ʕil-ʕism*^{i} *l-ṭuuba wil-fiɛl*^{i} *l-ʕamʃiir* ≈ one thing said and another thing done. - *ʕamʃiir daxal bi-zaɛabiib-u* Amshir has arrived bringing its storms, referring (1) to the coming of stormy weather at the end of winter. (2) to the arrival of a temperamental or moody person.

ء م ع see م ع ى: *ʕamɛa, ʕamɛaaʃ*

ء م ل

يأمل *yiʕmal*↑ /vt, imperf only/ to hope. *ʕana b-aʕmal ʕinnak tizur-ni* I hope you'll visit me. *maraḍ mif maʕmuul if-ʃifa minnu* a disease from which there is no hope of recovery. - vn *ʕamal*; ava *ʕaamil*; pva *maʕmuul*.

أمل *ʕamal* /n pl *ʕamaal*/ hope, aspiration. *ɛala ʕamal il-maksab* in the hope of profit. *ʕaṣḥaab-ak xayyibu ʕamal-ak* your friends brought about your failure. ‖ *xeebit ʕamal* a big failure, total good-for-nothing. - *xeebit il-ʕamal rakba gamal [prov]* a failure mounted on a camel (mockingly of one who promises what is beyond his capacity). - *ʕamal ʕibliis fig-ganna [prov]* (Satan's hope of Paradise) ≈ a total impossibility.

أملة *ʕamala* /n/ **1** source of desire and wonder. *tiqul-f*^{i} *beet-ak ʕamala* what's so marvellous about your house? *ʕil-laḥma ɛanduhum ʕamala* (meat for them is an object of curiosity) ≈ they don't see meat from one year's end to the next. *ʕil-qamar ir-ruusi kaan ʕamalit in-naas kull-a-ha* the Russian satellite was the big thing with everyone. ‖ *ʕamma di ʕamala w-allaahi* what an incredible way to behave! **2** aspiration, goal. *ɛuqbaal ʕamalt-ak [women in trad soc]* may you gain what you hope for too! (used on happy occasions and at celebrations).

اتأمل *ʕitʕammil* /vi/ **1a** to wonder in disbelief. *qaɛadt*^{i} *ʕatʕammil fi-ʕaḥwaal id-dunya* I sat there wondering at the ways of the world. *ʕitʕammilu ya naas* ≈ would you ever believe it? can you credit it? **1b** to make a close examination. *fataḥ is-saaɛa w-qaɛad yitʕammil fiiha* he opened the watch and scrutinized the works. **2**↑ to ponder, reflect, meditate. *baɛd it-taʕammul fil-mawḍuuɛ* after thinking the matter over. -vn *taʕammul*↑; ava *mitʕammil, mutaʕammil*↑.

تأمل *taʕammul*↑ /n pl *-aat*/ topic of meditation, devotional theme.

[1] ء م م

أم *ʕumm* /fem n/ **1** /pl *ʕummahaat, ʕummahaat*/ **1a** mother; - used with the name of a woman's eldest son, or, if she has no sons, her eldest daughter, or, if she has no children, her father, as a respectful and slightly affectionate substitute for her own name. *ya ʕumm-i* a formal and respectful mode of address to an older woman. *baɛd umm-i w-ʕuxt-i ʕil-kull*^{i} *giraan-i [prov]* after my mother and sister, all (others) are (mere) neighbours. *ʕilli ɛandu ʕumm-u ma-yinḥimil-f*^{i} *hamm-u [prov]* there's no need to worry about someone who has his mother (to support him). ‖ *ʕibn umm-u* mother's boy, sissy. - *ʕumm il-ɛagaayiz* epithet of Sayyida Zaynab. - *ʕumm il-maṣriyyiin* (1) epithet of the wife of Sa'd Zaghloul. (2) hospital named after her in Guiza, and the surrounding area. - *ʕumm il-muʕminiin* name

accorded to each of the wives of the Prophet Muhammad. - *ʃumm id-dinya* epithet of Egypt. - *ʃumm il-qura* Mecca. - *ʃumm" ɛali* dessert of filo pastry, raisins and butter, baked in hot milk. - *ʃumm ir-raas* the top of the head. **1b** *[print]* matrix. **2** /w foll pron suff, no pl/ stem, source, origin (cf *ʃabb* 4). *ʃil-fuul bi-yinfaf ɛala ʃummu* the beans dry on the plant. ‖ *ʃumm il-ɛeeh* core of a boil or abscess. **3** /w foll n, masc and fem pl *ʃummaat, ʃummaat/* **3a** the one with, the one having. *ʃil-ɛahwa t-turki ʃumm^{i} wiff* Turkish coffee with a head. *kubbayaat in-nibiit ʃumm^{i} rigl* the stemmed wineglasses. *ʃir-riggaala ʃummaat il-ɛumṣaan il-biiḍ* the men with the white shirts. ‖ *ʃumm il-xeer* (or *ʃumm is-saɛd* or *ʃumm il-hana*) epithet applied to a girl or a woman regarded as the bearer of good fortune. **3b** the one costing. *ʃil-ɛarabiyya ʃumm^{i} xamast alaaf gineeh* the five-thousand-pound car. - for other phrases beginning with *ʃumm* (e.g., *ʃumm^{i} ɛweeɛ*) look up the second component of the phrase.

أمّا *ʃamma* /n; always used in vocative/ *[trad soc]* mother. *haati l-ɛeef y-amma* bring the bread, ma! ‖ *y-amma, y-amma-y [children]* exclamation of fear.

أمومة *ʃumuuma* /n/ maternity, motherhood.

² ء م م

أمّة *ʃumma* /n pl *ʃumam*/ **1** nation. *maglis il-ʃumma* the National Assembly. *ʃil-ʃumam il-muttaḥida* the United Nations. ‖ *ya ʃummit in-nabi* ≈ what bedlam! **2** *ʃumam* /pl n/ crowds. *naas ʃumam* crowds of people.

أمّم *ʃammim* /vt/ to nationalize. - vn *taʃmiim*; ava/pva *miʃammim*.

اتأمّم *ʃitʃammim* /vi/ to be nationalized. - iva *mitʃammim*.

³ ء م م

أمّي *ʃummi* /adj */ illiterate.

أمّيّة *ʃummiyya* /n/ illiteracy. *maḥw ummiyya* eradication of illiteracy.

⁴ ء م م

أمّ *ʃamm (i)* /vt/ *[Isl]* to lead (the prayer), lead (s.o.) in the prayer. - vn *ʃamamaan*; ava *ʃaamim*; pva *maʃmuum*.

إمام *ʃimaam* /n pl *ʃaʃimma/ [Isl]* **1** prayer leader, imam. ‖ *ʃimaam masgid* chief religious leader in a mosque. **2** title of certain religious leaders. *ʃimaam il-yaman [obsol]* the Imam of the Yemen. ‖ *ʃil-ʃaʃimma l-ʃarbaɛa* the four eponymous founders of the schools of Islamic law. - *ʃil-ʃimaam* (1) = *ʃil-ʃimaam if-faɛi* (founder of the school of law dominant in Egypt). (2) the tomb of Imam Shafi'i in south-east Cairo and the district around it. - *ʃil-ʃimaam il-ʃakbar* the Sheikh of el-Azhar.

أمام *ʃamaam↑* **1** /prep/ before, in front of. **2** /n/ front. *xaṭwa lil-ʃamaam* one step forward!

أمامى *ʃamaami↑* /adj */ **1** fore, front. *ʃil-ʃasnaan il-ʃamamiyya* the front teeth. *ʃir-rigl il-ʃamamiyya* the foreleg. **2** forward. *laffa ʃamamiyya [gym]* forward roll.

⁵ ء م م

أمّ *ʃamm* <Copt> *[children]* **1** /n/ food. **2** /interj/ eat! - also *mam, hamm*.

ء م م ا

أمّا *ʃamma* **1** /conj/ **1a** when. *naadi ɛalayya ʃamma tuxrug* call me when you go out. **1b** if. *ʃamma tistanna baɛd is-saaɛa tnaafar miʃ ḥa-tlaaɛi taks* if you stay till after twelve, you won't find a taxi. **1c** until. *ʃuɛɛud ʃamma yirgaɛ* stay until he comes back. - /often used in elliptic statements/ *ʃamma ʃafuuf in-nobaa-di ḥa-titḥaggigu b-ʃeeh* (I'm just waiting) to see what excuses you'll make this time. **2** /conj/ as for. *ʃamma l-mazziika l-ɤarbiyya fa-laha lli yifhamuu-ha* as for western music, there are those who appreciate it. **3** interjection emphasizing extent or degree. *ʃamma di ḥkaaya* what an extraordinary business! that really is something! *ʃamma da raagil naṣṣaab* what a crook the man is! *ʃamma mbaariḥ sihirna ḥittit sahra* what a great evening we had yesterday!

إمّا *ʃimma* (also *ya ʃimma* and *la-ʃimma, ʃimman* and *ya ʃimman* and *la-ʃimman, ya ʃimmatan* and *la-ʃimmatan*) /correl conj/ *ʃimma* (or any variant) ... *ʃaw* (or *ʃimma* or any variant) either ... or. *laazim yikuun ʃimma xadam fig-geeʃ ʃaw itɛafa minnu* he must have either served in the army or been exempted from it.

ء م م ا ل

أمّال *ʃummaal* particle used **1** to introduce a question, often rhetorical and sarcastic, that asks for further information on the implication of a preceding statement or act ≈ in that case ..., if that is so ..., *ʃalla ʃinta lli b-tiftaḥ il-baab - ʃummaal feen ʃumm" ɛali* my! you open the door yourself! but where's Umm Ali? *ʃummaal ma-ḥadd^{i}-ʃ bi-yzur-ni leeh* then why doesn't anyone visit me? *ʃummaal zamb^{i} miin* so whose fault is it? **2** to introduce an emphatically affirmative answer to a question, or the confirmation of a statement ≈ but of course! most certainly! *dafaɛt illi ɛaleek*. - *ʃummaal* 'Have you paid what you owe?' 'Sure I have!' *laazim*

tiruuḥ li-waḥd-ak. - *ʃummaal yaɛni miin ḥa-yruuh maɛaaya* 'You'll have to go on your own.' 'Of course. Who is there to go with me?' **3** to indicate impatience or exasperation. *ʃistanna ɛalayya ʃummaal* give me a little time, will you! *ʃismaɛ bass*^{i} *ʃummaal* just listen, will you!

ءممتن see ءمم ا: *ʃimmatan*

ءممن see ءمم ا: *ʃimman*

ءمن

إمن *ʃimin (a)* /vi/ **1** to feel secure. *hiyya ɛayza tlaaqi r-raagil illi tiʃman ʃinn*^{a} *ḥayat-ha maɛaa tkuun saɛiida* she wants to find a man with whom she may feel sure that her life will be happy. *ma-b-aʃman-ʃ*^{i} *ɛalee l-waḥd-u* I don't feel easy about him on his own. **2** to be trusting. *ma-b-aʃman-luu-ʃ* I don't trust him. - vn *ʃamn*; ava *ʃaamin*.

أمن *ʃamn* /n/ safety, security. *ʃil-ʃamn il-qawmi* national security. *ʃil-ʃamn iṣ-ṣinaaɛi* industrial safety. *(quwwaat) ʃil-ʃamn il-markazi* the riot police, the home-guard.

أمان *ʃamaan* /n/ safety, security. *wiṣil bi-ʃamaan* he arrived safely. *ḥizaam ʃamaan* safety-belt. *ɛanɛa fil-yadd*^{i} *ʃamaan min il-faqr* possession of a craft is a safeguard against poverty. - /adjectivally/ *baṣṣeet ʃimaal wi-ymiin laɛeet is-sikka ʃamaan* I looked left and right and found it safe to cross. ‖ *ʃir-riggaala ma-lhum-ʃ*^{i} *ʃamaan* never trust a man! (said by a woman). *-fatrit il-ʃamaan* the safe period (during which the likelihood of conception is minimal). *-fi-ʃamaan illaah* (1) goodbye! (2) minding one's own business, doing no harm to anyone, as in *ʃana kunt*^{i} *saayiq fi-ʃamaan illaah laɛet-ha nizlit quddaam il-ɛarabiyya* I was driving along just nicely, when suddenly she stepped out in front of the car.

أمانة *ʃamaana* /n/ **1** honesty, trustworthiness. — /pl *-aat*/ **2a** something held in safe-keeping, deposit. *sibt ik-kitaab ʃamaana ɛandu* I left the book with him for safe-keeping. ‖ *maktab il-ʃamanaat* the left-luggage office, baggage deposit. **2b** some object kept hidden, or the existence of which is known only to a few. *ruḫt*^{i} *mṭallaɛ il-ʃamaana min geeb-i* I pulled the you-know-what out of my pocket. **3** secretariat. *ʃil-ʃamaana l-ɛaamma* secretariat general. **4** *[euphem]* faeces. *ḥaṭṭ-i-lu l-ʃamaana ɛal-baab* he left his visiting-card in front of the door. — /interj/ **5** I implore! *ʃamaana (ɛaleek) truuḥ tinadii* I beg you to go and call him.

أمين *ʃamiin*^{1} **1** /adj pl *ʃumana*/ honest, trustworthy. *ʃil-muḥaami laazim yikuun ʃamiin maɛa l-ɛumala* a lawyer must be honest with his clients. **2** /n pl *ʃumanaaʃ*/ official in a confidential or responsible position vis-à-vis a body or institution. ‖ *ʃamiin lagna* committee secretary. - *ʃamiin maxzan* warehouse supervisor. - *ʃamiin sanduuq* treasurer. - *ʃamiin maktaba* librarian. - *ʃamiin furṭa* municipal green-uniformed policeman (necessarily a holder of the high school certificate).

آمين *ʃaamiin, ʃamiin*^{2} /interj/ amen. *ʃadɛi ɛala walad-i w-ʃakrah min yiquul ʃamiin [prov]* I curse my son, and hate those who say 'Amen'.

أمّن *ʃammin* /vt/ **1** to trust. *m-aʃammin-uu-ʃ ɛala bint-i* I wouldn't trust him with my daughter. *min ʃammin-ak la-txuun-u wa-law kunt*^{i} *xaayin [prov]* do not betray the trust of one who trusts you even if you are really not trustworthy ≈ live up to people's expectations, even if they are ill-founded. **2** to render (a firearm or the like) safe. *ʃil-musaddas miʃammin* the revolver has the safety-catch on. — /vi/ **3** to take out insurance. *ʃit-taʃmiin ḍidd il-maraḍ* insurance against illness. *ʃammin ɛala ḥayaat-u b-ʃalf*^{i} *gneeh* he insured his life for a thousand pounds. **4** to say 'Amen' (e.g., after a prayer). ‖ *ʃammint*^{a} *ɛala kalaam-u* I approved of what he said. - vn *taʃmiin*; ava/pva *miʃammin*; pva *muʃamman*↑.

تأمين *taʃmiin* /n pl *-aat*/ insurance, surety. *taʃmiin ʃaamil* comprehensive insurance. *taʃminaat igtimaɛiyya* social insurance, social security. *taʃmiin ibtidaaʃi* initial surety (paid by one submitting a tender or the like). *ḥikaayit ig-gawaaz kull-a-ha taʃminaat - ʃiʃ-ʃabka taʃmiin ʃil-mahr*^{i} *taʃmiin ʃil-muʃaxxar taʃmiin* marriage is entirely a matter of insurances; the engagement gift of jewelry is an insurance; the bride-money is an insurance; the money set aside for a wife in case of divorce is an insurance.

مؤمّن *muʃamman: muʃamman ɛalee* insured person or object.

اتأمّن *ʃitʃammin* /vi/ passive of *ʃammin*. - ava/iva *mitʃammin*.

آمن *ʃaamin* /vi/ **1** to have faith, believe. *ʃiʃ-ʃaɛb*^{i} *ʃaamin bii* the people believed in him. *ya mʃamna lir-rigaal ya mʃamna lil-mayya fil-ɣurbaal [prov]* to have faith in men is to have faith in a sieve holding water. ‖ *ʃamint*^{i} *bi-llaah* an exclamation of wonder at some manifestation of God's wisdom. *-ti*ʃ*amnu bi-llaah* ≈ would you ever believe such a thing? **2** to have confidence, have trust. *ya weel illi yʃaamin luku* woe to him who trusts in you! *ma-bi-yʃamin-ʃ*^{i} *ɛal-fuluus fil-*

bank he does not trust the bank with his money. -vn *miʃamna*; ava *miʃaamin*.

اتآمن *ʃitʃaamin* /vi/ to be trusted. *da-nta titʃaamin ɛad-dahab* you are to be trusted even with gold. -iva *mitʃaamin*.

إيمان *ʃimaan, ʃiimaan* /n/ faith, belief. *ɛala ɋadd^{i} ʃimaan if-faɛb^{i} b-yibɋa ʃimaan ig-geef* the army's faith will be in proportion to that of the people.

مؤمن *muʃmin* /n */ believer, member of the faithful. *ɋalb il-muʃmin daliil-u* (the heart of the believer is his guide) the (true) believer can trust his heart. *ʃil-muʃmin dayman muṣaab [prov]* ≈ the righteous are (the worst) afflicted (as a test of their faith, an expression used when offering comfort in disaster).

ائتمن *ʃiʃtaman* /vt/ to trust. *ma-b-tiʃtimin-nii-ʃ* don't you trust me? *ʃaʃtimn-u ɛala ʃayy^{i} ḥaaga* I'd trust him with anything. -vn *ʃiʃtimaan*; ava *miʃtimin*; pva *muʃtaman*.

ائتماني *ʃiʃtimaani* /adj/ pertaining to credit. *tashilaat iʃtimaniyya* credit facilities.

استأمن *ʃistaʃmin* /vt/ **1** to trust. **2** to select for trustworthiness. -ava *mistaʃmin*.

استأمّن *ʃistiʃammin↓* /vi/ to place trust. *baɋa ɋaaɛid mistiʃammin-lu yɋuum yisraɋ-ni* here I am, sitting off my guard trusting him and he robs me. -ava *mistiʃammin*.

استآمن *ʃistiʃaamin↓* /vi/ to feel safe, feel secure. *siib-u lamma yistiʃaamin wi-ynaam wi-baɛdeen ʃimsik-u* leave him until he feels safe and goes to sleep then catch him. -ava *mistiʃaamin*.

ء م ن ب –
أمنيبوس *ʃumnibuus* or *ʃumnubuus* <Fr *omnibus*> /n pl *-aat/ [obsol]* bus.

ء م ن ث
أمينت *ʃamint* <Fr *amiante*> /n/ asbestos. -also *ʃamyant*.

ء م ن ى
أمونيا *ʃamunya* <Engl> /n/ ammonia.

ء م ه ا ت
أمهات *ʃamhaat: balaḥ ʃamhaat* a small sweet yellow variety of date.

ء م و ى ل
أمويل *ʃamwiil* /coll n/ *[obsol]* bamboo canes (for use in the manufacture of furniture).

ء م ى ن ت
أمينت *ʃamyant* <Fr *amiante*> asbestos. -also *ʃamint*.

ء ن
إن *ʃin* /conj/ if. *ʃin ɋult^{i} ʃaah nibɋa mwafɋiin* if you say 'yes', then we're agreed. *ʃin ʃaaʃ allaah* if God will. ¶ *ʃin ... walla ...* /correl conj/ whether ... or .... *ʃin kaan kuwayyis walla wiḥiʃ* whether it be good or bad.

ء ن ا
أنا *ʃana* /pers pron/ I. *ʃana gaɛaan* I'm hungry. *da-na ɤalbaan* but I'm (just) a poor man. ‖ *ɋaal ʃana w-ʃana* to brag, boast, as in *kull^{i} ma yiftaḥ buɋɋ-u yɋuul ʃana w-ʃana* every time he opens his mouth it's to boast about himself. - *ʃana w-huwwa wiz-zaman ṭawiil* ≈ I'll get even with him in the end. - *ʃana w-ʃaxuu-ya ɛala bn^{i} ɛamm-i w-ʃana wi-bn^{i} ɛamm-i ɛal-ɤariib [prov]* my brother and I stand together (in a dispute) against my cousin, but my cousin and I stand together against anyone outside the family.

¶ *ya-ana* (o- -*aani*) dear me! oh my! (used by one who is ill, tired o. exasperated).

أناني *ʃanaani* **1** /adj */ egoistic, selfish. **2** /n */ egoist.

أنانيّة *ʃananiyya* /n/ egoism, selfishness.

ء ن ب
أنّب *ʃannib* /vt/ to scold. *ʃabuu ʃannib-u ɛa-lli ɛamal-u* his father scolded him for what he had done. -vn *taʃniib*; ava *miʃannib*.

تأنيب *taʃniib* /vn/ ‖ *taʃniib iḍ-ḍamiir* pangs of conscience.

اتأنّب *ʃitʃannib* /vi/ to be scolded. -iva *mitʃannib*.

ء ن ب ا see ء م ب ا

ء ن ب ا ش see ء م ب ا ش

ء ن ب و ب
أنبوبة *ʃambuuba, ʃumbuuba* /n pl *ʃanabiib, ʃambubaat*/ **1** cylinder. *ʃumbuubit butagaaz* a cylinder of butane gas. **2** tube. *ʃambuubit maɛgguun sinaan* a tube of tooth-paste. *ʃambuubit ixtibaar* test tube. ‖ *ʃambuubit ɋalam* a biro refill, ball-point pen refill. **3** inflatable ball. ‖ *ʃambuubit il-hawa* squeeze-bulb (on a scent-spray, an atomizer etc.).

ء ن ت [1]
نتاية *nitaaya* /pl *nity, nuty, nitayaat*/ **1** /adj/ **1a** female (animal or plant). *naxla ntaaya* female palm tree. **1b** voluptuous (of a woman). **2** /n/ **2a** person, animal or

plant of the female sex. *kalbit-na wildit talat dukúra wi-ntayteen* our dog gave birth to three male and two female puppies. **2b** female (plug, joint, mechanical part etc.). *dakar wi-ntaaya* (1) tenon and mortise. (2) hook and eye fastener.
أنوثة *ʔunuusa* /n/ femininity.

ء ن ت [2]
إنت *ʔinta* /pers pron sing masc/ you. *ʔinta kaddaab* you're a liar! *di btaʕt-ak ʔinta* is this yours? *da-nta ʃakl-ak baayin ʕalee z-zaʕal* it's obvious from your appearance that you are upset. ‖ *ʔinta w-huwwa* both of you! (usually in contexts of abuse) as in *ya wlaad ik-kalb ʔinta w-huwwa* you sons of bitches both of you! *yalla ʔinta w-huwwa* get the hell out, both of you! - *ya waad ʔinta [abus]* hey you boy! - *ʔinta w-ʔinta [abus]* you this and you that, as in *ma-luu-ʃ kalaam ʔilla nta w-ʔinta lamma zhiʕt* he has been doing nothing but criticize me and I've reached the end of my tether.
إنتي، إنت *ʔinti* /pers pron sing fem/ you. *ʔinti ḥabibt-i* you're my darling.
إنتو *ʔintu* /pers pron pl/ you. *ʔintu ʔaḥsan naas* you're the best of people.
إنتم *ʔintum* = *ʔintu*.

(ء ن ت ر –)
أنتيره *ʔantireeh* <Fr *entrée*> /n pl *-aat*/ **1** informal sitting room (in contrast with *ṣaloon*). **2** suite of furniture for such a room.
أنترتيب *ʔantartayb* <Engl> /n/ intertype machine.
أنتوراج *ʔanturaaj* <Fr *entourage*> /n/ ring circled with gems.
إنترفيو *ʔintarfiyuuh* <Engl> /n pl *-aat*/ interview. *ʕamaluu-lu ʔintarfiyuuh* they interviewed him.
أنتركوت *ʔantirikoot* or *ʔantarkoot* or *ʔintarkoot* <Fr> /n/ beef from the ribs, entrecôte.

ء ن ت ك
أنتيكة *ʔantiika* <It *antico*> /n pl *-aat*/ **1** antique. – /adj invar/ **2** ancient, antique. **3** odd, droll, grotesque. *wiʃʃ-ak ʔantiika* your face is absurd. *ʃakl-u ʔantiika* he's a droll-looking type.
أنتيكخانة *ʔantikxaana* /n/ museum; obsolete except in *ʔil-ʔantikxaana* the Egyptian Museum.
اتأنتك *ʔitʔantik* /vi/ to dress in a quaint and elaborate fashion. - vn *ʔantaka*; ava *mitʔantik*.

ء ن ت م see ء ن ت [2] : *ʔintum*

ء ن ت ن
أنتنة *ʔantinna* <Engl> /n pl *-aat*/ antenna.

ء ن ت و ت
أنتوت *ʔantuut* <prob Copt> /n pl *ʔanatiit*/ peg on the beam of a plough, or of a *saqya*, for the attachment of harness (see Pl.D, 13). - also *bantuut, lantuut*.

ء ن ث see ء ن ت [1]

ء ن ج ج
أنجيه *ʔangajeeh* <Fr *engagé*> /adv/ arm in arm. *kaanu maʃyiin ʔangajeeh* they were walking arm in arm.
أنجج *ʔangij* /vt/ to link one's arm with (s.o.). - vn *ʔangaja*; ava *miʔangij*.
اتأنجج *ʔitʔangij* /vi/ to link arms. - ava *mitʔangij*.

ء ن ج ر
أنجر *ʔangar* /n pl *ʔanaagir*/ large shallow copper serving-vessel.

ء ن ج ل –
إنجلترا *ʔingiltira, ʔingiltira* <It *Inghilterra*> /prop n/ England, (loosely also) Britain.
إنجليزى *ʔingiliizi* /adj pl *ʔingiliiz*/ **1** English, (loosely) British. ‖ *ʔaḥmar ʔingiliizi* pillar-box red. - *muftaaḥ ʔingiliizi* monkey wrench. - *kurraas ʔingiliizi* exercise book for handwriting practice. - *firaax ʔingiliizi* large variety of chicken. - *(ʃarbit) malḥ ingiliizi* Epsom salts. - *buruud ʔingiliizi* British reserve, the stiff upper lip. - *ṣamɣ ingiliizi [chem]* dextrin, British gum. – /n/ **2** an Englishman, (loosely) a Briton. ‖ *xallii-na ngiliiz* let's go Dutch! **3** /no pl/ the English language.

ء ن ج ى ل
إنجيل *ʔingiil* /n/ **1** /pl *ʔanagiil*/ gospel. **2** *ʔil-ʔingiil* /no pl/ the New Testament.
إنجيلى *ʔingiili [Chr]* **1** /n */ **1a** Evangelist, writer of one of the four gospels. **1b** reader in church services. **2** /adj */ evangelical. *ʔil-ʔaqbaaṭ il-ʔingiliyyiin* members of the Coptic Evangelical Church.
منجليّة *mangaliyya* /n pl *-aat/ [Chr]* church lectern.

ء ن د ل س
أندلس *ʔandalus* /prop n/ Andalusia.
أندلسى *ʔandalusi, ʔandaluusi* /adj */ Andalusian.

ء ن ر ب see ء ر ن ب

ء ن ز ى م
أنزيم *ʔanziim* <Fr> /n pl *-aat*/ enzyme.

ء ن س [1] see also و ن س
أنس *ʔuns* **1** /n/ friendly atmosphere, conviviality.

qaɛdit ʕuns a convivial gathering. **2** /adj invar/ congenial, convivial. *sitt*^{i} *ʕuns* a convivial woman. *maglis ʕuns* a convivial get-together. *lelit-na ḥa-tkuun ʕuns* our night will be fun.

إنس *ʕins* /coll n/ member(s) of the human race. *ʕinta ʕins*^{i} *walla ginn* are you a person or a spirit (said, e.g., when coming upon someone in the dark) ≈ what have we here? *ʕil-ʕins*^{i} *wil-ginn*^{i} *wil-ḥayawaan win-nabaat* mankind, spirits, animals and plants.

إنسي *ʕinsi* **1** /adj */ attributed to mankind (as distinguished from the world of spirits). **2** /n/ a member of the human race.

إنسان *ʕinsaan* /n/ **1** person, human being. **2** *ʕil-ʕinsaan* **2a** frozen form equivalent to English 'one'. *ʕil-ʕinsaan laazim yiɛiif* one has to live! **2b** Man, mankind. *ʕil-ʕinsaan il-muɛaaṣir* contemporary Man. — /adj/ **3** humane, kindly. *di sitt*^{i} *ʕinsaana b-ṣaḥiih* she is a woman full of human feeling.

إنسانيّة *ʕinsaniyya* /n/ **1** humanity, humanness. **2** human feeling, humaneness, kindliness.

أنيس *ʕaniis* /n/ companion, someone who keeps one company.

آنسة *ʕaanisa* /n pl *ʕawaanis, ʕaanisaat*/ title of, and form of address or reference to, a young unmarried woman ≈ miss. *ʕil-ʕaanisa faṭma* Miss Fatma.

آنس *ʕaanis* /vt/ to entertain (with one's company). *ʕindah-lu yiigi yʕanis-na hina* call to him to come and keep us company here. *ʕanistu* and *ʕanistuu-na* courteous formula expressed to guests ≈ you're very good company (the reply being *ʕalla yʕans-ak*). *ʕintu ḥa-tʕansu ʕimta* when will you be coming to visit us? - vn *miʕansa*; ava *miʕaanis*.

اتآنس *ʕitʕaanis* /vi/ passive of *ʕaanis*. - iva *mitʕaanis*.

استأنس *ʕistaʕnis* /vi/ **1** to be sociable, pass the time in a friendly manner. *humma qaɛdiin bi-yistaʕnisu maɛa baɛḍ* they're sitting having a friendly chat together. **2** to seek advice, consult. *ʕaḥibb astaʕnis bi-raʕy-ak fil-mawḍuuɛ da* I should like to ask your opinion on this subject. **3**↑ to become tame (of an animal). *ʕin-nimr*^{i} *miʃ mumkin yistaʕnis* tigers cannot be tamed. — /vt/ **4**↑ to tame (an animal). *bi-yiftiru ʕuruud wi-yistaʕnisuu-ha* they buy baboons and tame them. - vn *ʕistiʕnaas*↑; ava *mistaʕnis*; pva *mustaʕnas*↑.

ء ن س ^{2} see ء ن ت ^{1} : *ʕunuusa*

ء ن س و ن see ى ن س و ن : *ʕansuun*

ء ن ش ت

أنشته *ʕaniʃtah* <T *enişte*> /n/ *[obsol]* form of address or reference to a sister's husband (used by women).

ء ن ش و ج

أنشوجة *ʕanfuuga* <It *acciuga*> /coll n/ anchovies.

ء ن ف

أنف *ʕanfˆ* /n pl *ʕunuuf*/ nose. ‖ *raɣm*^{i} *ʕanf-u* in spite of him.

أنفى *ʕanfiˆ* /adj/ nasal.

إنف *ʕinf* /n pl *ʕunuuf*/ **1** *[carp]* moulding around the frame of a door. **2** *[mus]* bridge at the angle on the neck of an *ɛuud* (see Pl.J, 9).

إنف *ʕinif* /adj */ finicky. *nifs-u ʕinfa* he has a finicky appetite.

أنفة *ʕanafa* /n/ self-respect, decent pride. *ɛandu ʕanafa* he has self-respect.

اتأنّف *ʕitʕannif* /vi/ to look down one's nose, affect a supercilious air. - ava *mitʕannif*.

استأنف *ʕistaʕnif* /vt/ **1** *[leg]* to appeal against. *ʕil-muḥaami staʕnif il-ḥukm* the lawyer appealed against the sentence. **2**↑ to resume. *ʕistiʕnaaf il-ɛilaqaat id-diblumasiyya* the resumption of diplomatic relations. - /the literary passive form also occurs/ *miʃ manẓuur il-ɛilaqaat tustaʕnaf qabl*^{i} *sana* it is unlikely that relations will be resumed before a year has passed. - vn *ʕistiʕnaaf*; ava *mistaʕnif*.

استئناف *ʕistiʕnaaf* /n/ *[leg]* appeal. *maḥkamit il-istiʕnaaf* the Court of Appeal. *muḥaami stiʕnaaf* a lawyer with enough seniority to appear before the Court of Appeal.

استئنافى *ʕistiʕnaafi* /adj/ *[leg]* pertaining to appeal.

ء ن ف ل –

إنفلونزا *ʕanfilwanza, ʕinfilwinza* <Engl> /n/ influenza, severe attack of common cold.

ء ن ك ل

أنكل، أونكل *ʕankil* <Engl> (also *ʕunkil* <Fr>) /n/ affectionate and respectful form of address and reference used by young people to uncles and also to men who are not close relatives ≈ uncle.

ء ن ك ل –

أنكلوستوما *ʕankilistooma* <perh Fr> /n/ *[path]* hookworm, ankylostomiasis.

ء ن ك ى س see ن ك س : *ʕinkiis*

ء ن م

الأنام *ʕil-ʕanaam* /n/ mankind. *xayr il-ʕanaam* best of mankind (epithet of the Prophet Muhammad).

ء ن م ى
أنيميا ʕanimya, ʕinimya <Engl> /n/ *[path]* anaemia.

ء ن ن [1]
أنّ ʕann *(i)* /vi/ to moan, groan. - vn ʕaniin; ava ʕaanin.

ء ن ن [2]
إنّ ʕinn **1** /conj introducing subordinate clause/ that. *wafiqt[a] ɛala ʕinni ḥ-aruuḥ* I agreed to go. *qaluu-li ʕinn il-maktab maqfuul* they told me that the office was closed. *ḥ-abɛat iltimaas ʕinnu yiqbal-ni* I'll send a request that he accept me. **2** particle used to emphasize a following statement. *ʕamma ʕinnak ḥumaar bi-ṣaḥiiḥ* you really are a complete ass!
¶ *maɛa ʕinn* /conj/ despite the fact that.
إنّة ʕinna /n pl *-aat*/ defect, drawback. *ʕil-bint[i] di laazim fiiha ʕinna lamma ygawwizuu-ha l-walad biʃ-ʃakl[i] da* this girl must have something wrong with her for them to marry her off to a boy of this type.

ء ن ن [3] see ء ن ا: *ʕanaani, ʕananiyya*

ء ن ن ا س
أناناس ʕananaas <Fr *ananas*> /coll n/ pineapple(s).

ء ن ن م ا
إنّما ʕinnama **1** /conj/ however, but. *ma-kunt[i]-ʃ b-abuṣṣ[i] l-ḥagaat zayy[i] di ʕinnama hiyya kaanit il-ḥaqiiqa ɛagbaa-ni* I used not to pay attention to such things, but the fact is she appealed to me. *huwwa ɛbaara ɛan ʃakuuʃ ʕinnama masluub* it's a type of hammer, but tapered. *ʕik-kalaam sahl[i] ʕinnama l-fiɛl[i] ṣaɛb* it's easy to talk but hard to act. **2** exclamatory particle ≈ what a ..., such a ..., really. *ʕiftareet ɛarabiyya ʕinnama ɛarabiyya* I've bought a car - such a fantastic car! *kalt[i] ʃakla ʕinnama min illi qalb-ak yiḥibb-a-ha* I ate a really delicious meal. *ḍarabt-u ɛalqa ʕinnama ɛaal* I gave him a really good hiding.

ء ن ه
أنهو ʕanhu /interrog adj (appositively also *ʕanhuu, ʕanhuun*), fem *ʕanhi* (appositively also *ʕanhii, ʕanhiin*), pl *ʕanhum* (appositively also *ʕanhumma*)/ which? *ʕanhu door* or *ʕid-door ʕanhu* (or *ʕanhuu* or *ʕanhuun)* which floor? *ʕanhi bint* or *ʕil-bint[i] ʕanhi* (or *ʕanhii* or *ʕanhiin*) which girl?

ء ن ي [1]
اتأنّى، تأنّى ʕitʕanna, taʕanna↑ /vi/ to act with deliberation and caution. *man taʕanna naal ma tamanna [prov]* he who acts with deliberation achieves what he desires. *bi-yiftaval bi-taʕanni* he works carefully and slowly. ‖*fit-taʕanni s-salaama (wi-fil-ɛagala n-nadaama) [prov]* (there is safety in caution and regret in speed) ≈ more haste, less speed. - vn *taʕanni*; ava *mitʕanni, mutaʕanni↑*.
استنّى ʕistanna *(yistanna)* **1** /vt/ to wait for. *ʕil-ɛarabiyya ḥa-tistannaa-k* the car will be waiting for you. *ʕinta mistanni ʕeeh* what are you waiting for? **2** /vi/ to wait. *miʃ kunt[i] tistanna lamma ʕaṣḥa* couldn't you have waited till I woke up? *ʕistanna ɛalee* give him time. ‖*ma-ḥadd[i]-ʃ ḥa-yistanna* ≈ death comes to all. - *ʕistanna l-awarrii-k* just wait and I'll show you! - ava *mistanni*.
استأنّى ʕistiʕanna↓ /vi/ to work with care, act with deliberation. - ava *mistiʕanni*.

ء ن ى [2]
أوانى ʕawaani↑ /pl n/ vessels, containers

ء ه ء
إهئ ʕihiʔ onomatopoeia for the sound of crying or giggling.

ء ه ل
أهل ʕahl /n pl ʕahaali/ **1** family, family group, relatives. *ʕilli ma-luu-ʃ xeer fi-ʕahl-u ma-luu-ʃ xeer fi-ḥadd [prov]* he who does no good to his family does no good to anyone. ‖*ʕahl il-beet* the family of the Prophet Muhammad. - *wi-nta ma-l-ʕahl-ak [abus]* what business is it of yours? **2** people. *ʕahl il-balad* (or *ʕahaali l-balad*) the people of the town. *ʕahl il-yimiin* rightists. ‖*ʕahl is-sunna* Sunnite Muslims. - *ʕahl iṭ-ṭariiq* Sufis. - *ya-hl alla ya-lli hina* ≈ anyone at home? — *ʕil-ʕahaali* /pl n/ **3** the public. ‖*tuggaar il-ʕahaali* private sector merchants.
¶ *ʕahlan* (also *ʕahlan wi-sahlan*) interjection used (1) in greeting ≈ hi! hello! (2) in welcome ≈ (you're most) welcome! (3) in allowing and accepting (often critically) the freedom of others to act, as in *huwwa miʃ ɛaayiz yiigi* - *ʕahlan wa-sahlan* he doesn't want to come? he's free to do as he likes! *ɛaayiz tiɛabbar ɛan raʕy-ak* - *ʕahlan wa-sahlan* you have a perfect right to express your opinion. - *ʕahlan bi...* welcome to ...! *ʕahlan bis-sawra* welcome to the revolution! - *ʕahlan biik (biiki, biikum)* response to *ʕahlan* (1) and (2).
أهلى ʕahli /adj/ **1** privately owned, privately run, held as a concession from the government. *madrasa ʕahliyya* private school. *maktab bariid ʕahli* sub-post-office.

2 national. *ʕil-bank il-ʕahli l-maṣri* the Egyptian National Bank. *ʕin-naadi l-ʕahli* the National (Football) Club.

أهليّة *ʕahliyya* /n/ **1** family, kin. **2**↑ eligibility.

آهل *ʕaahil*↑ /adj/ populous, populated, inhabited. *ʕil-ɣaraat kaanit barḍu ɛal-manaaṭiq il-ʕahla bis-sukkaan* air-raids were also carried out over the populated areas.

مأهول *maʕhuul* = *ʕaahil*.

أهّل *ʕahhil* /vt/ to qualify, make qualified. *ʕis-sanawiyya l-ɛaamma tʃahhil-ni l-duxuul ig-gamɛa* the secondary certificate qualifies me to enter university. *markaz taʕhiil mihani* Occupational Training Centre. -vn *taʕhiil*; ava *miʕahhil*; pva *muʕahhal*.

مؤهّل *muʕahhil, muʕahhal* /n pl *-aat*/ **1** qualification. **2** *muʕahhilaat, muʕahhalaat* /pl n/ qualified persons, people with diplomas, certificates etc. ‖ *ɛaskari muʕahhilaat* a soldier with a school certificate or diploma.

اتأهّل *ʕitʕahhal, ʕitʕahhil* /vi/ **1** to get married. *ʕitʕahhilt*^{i} *b-bint il-ḥalaal* I got married to the right girl. **2** to become qualified, obtain qualifications. -ava *mitʕahhil*.

استاهل *ʕistaahil* /vt/ **1** to deserve, merit. *walaḍ ma-yistahil-f*^{i} *ʕilla ḍ-ḍarb* a boy who deserves nothing but a beating. **2** to be worth. *da yistaahil kaam fi-naẓar-ak* how much is this worth in your opinion? -ava *mistaahil*.

ء ه و

أهو *ʕahu* /w foll n or pron (*ʕahu hiyya* often *ʕahiyya*, *ʕahu humma* often *ʕahumma*)/ introductory particle anticipating a word or clause that expands or comments on a statement or situation ≈ there you are, now you see. *ʕabiiɛ fi-dukkaana w-ʕahu tasaali* I'll open a small shop, and it'll be a way to keep busy. *ɛandu ʕinsaniyya yuqaf - ma-ɛanduu-ʃ ʕahu maafi* if he has any human feeling, he stops; if he hasn't, he keeps going. *miʃ ɣariiba - ʕahu huwwa w-hiyya zayy*^{i} *baɛḍ* it's no surprise; he and she are just the same. *miʃ qult-i-lik - ʕahu-nti geeti ʕiid-ik faḍya* didn't I tell you (that you'd come empty-handed), and here you are, empty-handed. *ʕahu kida l-boos walla balaaʃ* now that's what I call kissing!

أهو *ʕahú* /fem *ʕahí*, pl *ʕahúm*/ demonstrative drawing attention to a preceding or following noun. *ʕil-muzakkira maɛaaya ʕahí* I have the memo with me right here. *b-atkallim ɛarabi ʕahú* I'm speaking Arabic right now. *ʕahúm il-qumṣaan* here are the shirts.

ء ه ى ه

أيهيه *ʕèheeh, ʕihiih* exclamation indicating disbelieving astonishment ≈ come off it!

ء و

أو *ʕaw* /conj/ or. *mumkin tiruuḥ min hina ʕaw hina* you can go either this way or that.

ء و ا ن [1] see ل و ا ن: *ʕiwaan*

ء و ا ن [2] see ء ن ى [2]: *ʕawaani*

ء و ب

إياب *ʕiyaab: zihaab wi-ʕiyaab* there and back. *tazkara zhaab wi-ʕyaab* return ticket, round-trip ticket.

ء و ت

أوت *ʕawit* <Engl> **1** /adj invar/ *[sport]* out, out of play (of a ball). **2** /adv/ **2a** *[sport]* out of play. **2b** astray, off the mark. **3** /n/ *[broadc]* output.

ء و ج

أوج *ʕoog* /n/ *[mus]* name given to the note B half flat.

أويج *ʕawiig* /n/ *[mus]* mode in Arabic music having E natural and G flat.

ء و د see ء و ض

ء و ش ى see ء ش ى [2]: *ʕufiyya*

ء و ض

أودة، أوضة *ʕooḍa* <T *oda*> /n pl *ʕuwaḍ, ʕiwaḍ, ʕoḍaat*/ **1** room. *ʃaqqa b-talat ʕuwaḍ* a three-room flat. ‖ *ʕooḍit taftiiʃ* manhole, inspection shaft. **2** suite of furniture. *ʕooḍa xaʃab zaan* a beechwood suite. *ʕooḍit noom* (1) bedroom. (2) bedroom suite.

ء و ف ر

أوفر *ʕoofar* <Engl *over*> /fem n, pl *-aat*/ *[soccer]* overhead kick. *ḥa-yiɛmil ʕoofar* he is going to kick it overhead. *bi-yirfaɛ-ha ʕoofar ṭawiila* he puts it up in a long overhead kick.

ء و ق ى see و ق ى [2]

ء و ل [1]

آل *ʕaal*[3] *(u)* /vi/ **1** to revert. *ʕaalit il-ʕamlaak li-ʕaṣḥab-ha l-ʕaṣliyyiin* the property reverted to its original owners. **2** to be destined, be bound, be certain (to do s.th.). *ʕil-ɛimaara di ʕayla lis-suquuṭ* this build-

ing is bound to collapse. - vn *ʕayalaan*; ava *ʕaayil*.

أوّل *ʕawwil*[1] **1** /adj invar, **in nominal position**/ first. *ʕawwil marra* the first time. *ʕawwil talat marraat* the first three times. ‖ *ʕawwil ʃimbaariḥ* the day before yesterday. - *ʕawwil ʕawwil ʃimbaariḥ* the day before the day before yesterday. **2** /n pl *ʕawaaʃil*/ **2a** first part, beginning. *ʕawwil if-fahr* the first day of the month. *ʕawaaʃil if-fahr* the early part of the month. *min il-ʕawwil* (1) from the beginning. (2) in the first place. *ʃimsik il-xeeṭ min ʕawwil-u* hold the thread by the end. *min ʕawwil-u l-ʕaxr-u* from beginning to end of it. *ʃilli lu ʕawwil lu ʕaaxir [prov]* what has a beginning must have an end. ‖ *ʕawwil bi-ʕawwil* on the spot, as soon as (it) comes, as in *xallaṣ fuxl-ak ʕawwil bi-ʕawwil* do your work as soon as it comes to you (don't wait for it to accumulate). **2b** top scorer (in an examination etc.). *ʕawaaʃil il-faṣl* the top students in the class. **2c** the half of the domino which is not matched with a domino on the board. *gihaar wi-ʕawwil-u bis-sih* a domino with a four matching a four on the board and a three unmatched. *ʕawwil-ak ya dooh wi-nta bil-beef* here is a two (to match a two on the board) paired with a five.

¶ *ʃil-ʕawwil* /adv/ at first, first of all. *da kaan il-ʕawwil* that's how things used to be. *ma-baqit-ʃ*[i] *tfuut ʁala ʕumm-i zayy il-ʕawwil* she stopped dropping in on my mother the way she used to. *ʈammin-ni l-ʕawwil* set my mind at rest first. *ʃil-ʕawwil bi-tliff il-balad* first of all you go round the village. - *ʕawwil ma* /conj/ as soon as. *ʕawwil ma tḫuṭṭ*[i] *rigl-ak fil-beet ʁaayiz tiqawwim fii xinaaqa* as soon as you enter the house, you want to start a quarrel. *ʕawwil ma ʕaakul il-luqma tuqaf ʁala qalb-i* the moment that I eat my meal, it sets off heartburn.

الأوّلة *ʃil-ʕawwila* /n/ *[frozen contexts]* the first stage or part. *ʃil-ʕawwila ʁasal wit-tanya baṣal [prov]* the first part is honey (i.e. nice) and the second onions (i.e. horrible) (said especially of marriage). *ʃil-bani ʕaadam ya b-ʕawwilt-u ya b-ʕaxrit-u [prov]* man gains either this world or the next. *ʃil-ʕawwila bi-sm-illa wit-tanya bi-sm-illa wit-talta bi-sm-illa* the first is in the name of God, and the second is in the name of God, and the third is in the name of God (a magic formula to exorcise the evil eye, often accompanied by rubbing of the sick person with the leaves of a corn cob). *ʃil-ʕawwila ʕaah wi-tanya ʕaah wit-taalita ʕaah* the first line of each section of a certain tripartite form of a *mawwaal*. ‖ *ʕawwilt imbaariḥ* the day before yesterday. - *ʃil-ʕawwila* call by rag-ball player at the first service of each round.

أوّلكشي *ʕawwilakʃi* /adv/ **1** first of all. *ʕawwilakʃi gum yizuruu-na w-baʁdeen* ... first, they came and visited us, and then .... *daxalt il-maktab wi-ʕawwilakʃi w-ʕana b-aftaḥ id-durg*[i] *ṣubaaʁ-i tʁawwar* I went into the office and straightaway hurt my finger as I was opening the drawer. **2** not before, only. *ʕawwilakʃi n-nahar-da ṣ-ṣubḥ* only this morning and not before.

أوّل *ʕawwal*↑ **1** /adj, fem *ʕuula*, pl *ʕawaaʃil, ʕuwal*/ first. *ʃid-dars il-ʕawwal* the first lesson. *ʃiṭ-ṭalaba l-ʕawaaʃil* the top students. *ʃiṣ-ṣafḥa l-ʕuula* the front page (of a newspaper). *mufattiʃ ʕawwal* chief inspector. ‖ *mulaazim ʕawwal [mil]* lieutenant. - *fi-ʕuula* in the first year (at school). **2** /n/ First of all (epithet of God).

¶ *ʕawwalan* /adv/ firstly (in enumeration).

أوّلي *ʕawwali* /adj */ basic, primary. *ʃisʁaaf ʕawwali* or *ʃisʁafaat ʕawwaliyya* first aid. *taʁliim ʕawwali [obṣol]* basic education (not leading systematically on to further stages).

أوّليّات *ʕawwaliyyaat* /pl n/ basics.

أوّلاني *ʕawwalaani* /adj */ first, initial. *ʃil-faṣl il-ʕawwalaani* the first classroom. *ʃit-talatt uʃhur il-ʕawwalaniyyiin* the first three months. *ʃil-ɣalaṭaat il-ʕawwalaniyya* the initial mistakes.

ء و ل[2]

أوّل *ʕawwil*[2] /vt/ to misinterpret deliberately, twist (facts etc.). *ʃinta bi-tʕawwil kalaam-i b-fakl*[i] *ɣariib* you're twisting my words in an amazing way! - vn *taʕwiil*; ava/pva *miʕawwil*.

مأوّلاتي *miʕawwilaati* /n pl -*yya*/ twister, garbler (of facts etc.).

اتأوّل *ʃitʕawwil*↑ /vi/ to be misinterpreted deliberately, be twisted (of facts). - iva *mitʕawwil*.

ء و ل[3]

أولة *ʃuula* /n/ hopscotch.

ء و ل ج see ء ل ج ى: *ʕawlugiyya*

ء و م

أوم *ʃoom* <Engl> /n/ *[elec]* ohm.

ء و ن

آن *ʕaan*[1] /vi/: *ʕaan il-ʕawaan* the time has come, as in *ʕaan il-ʕawaan nitgawwiz baqa* it's high time we got married, *ma-ʕan-ʃ il-ʕawaan nimʃi* it's not yet the right time for us to leave.

آن *ʕaan*[2]↑: *min ʕaan li-ʕaaxar* from time to time, now and then.

¶ *ʃil-ʕaan*↑ /adv/ now. *ḥatta l-ʕaan* up to now.

أوان *ʕawaan* /n/ **1** appointed time. *kull*[i] *feeʃ bi-*

ʕawaan-u *[prov]* there's a proper time for everything. *baʁd[1] ʕawaat il-ʕawaan* too late. *ga min ʏeer ʕawaan* he came unexpectedly. **2** season. *ʕawaan il-manga* the mango season.

ء و ن ط

أونطة *ʕawanṭa* <T *avanta*> /n/ trickery, deceit. *ʕis-sagaayir il-yomeen dool ʕawanṭa* cigarettes these days are a fraud. ‖ *sinima ʕawanṭa haatu flus-na* the chant from the cheap seats of the cinema when the projector breaks down. - /adverbially/ *bi-yirkabu ʕawanṭa* they ride without paying. ‖ *raaḥ ʕawanṭa* he lost everything to no purpose.

أونطجي *ʕawanṭagi* /n pl *-yya*/ cheat, swindler.

[1] ء و ه

أوه *ʕooh* exclamation of exasperation. *ʕana ʠalb-i ḥaasis ʕinn[a] ḥa-yiḥṣal ḥaaga miʃ kiwayyisa.* - *ʕooh ḥa-yiḥṣal ʕeeh bass* 'I have a foreboding that something bad is going to happen.' 'For Heaven's sake, what could possibly happen?'

[2] ء و ه see also ء ا ه

تأوّه *ʔitʕawwah* /vi/ to moan with pain or distress. - vn *taʕawwuh*↑; ava *mitʕawwah*.

[1] ء و ى

مأوى *maʕwa* /n pl *maʕaawi*/ refuge.

إيواء *ʔiiwaaʕ*↑ /n/ provision of shelter. *muʕassasaat ʔiiwaaʕ* organizations for housing the destitute.

[2] ء و ى

أوية *ʕuuya* <T *oya*> /n/ variety of handworked edging (on the head-kerchief traditionally worn by women).

[3] ء و ى

أوى *ʕawa[1] (i)* <prob Copt> /vt/: *ga-k ʕawa yiʕwii-k ʃabus,* may misfortune befall you!

أوى *ʕawa[2]* /n/ see *ʕawa[1]*.

ء و ى م see ء ى م

ء ى

أي *ʕay*↑ /conj/ in other words. *ʔit-tawaagud hina ʔiʁtibaari ʕay ʔinn il-muwaẓẓaf yuʁtabar mawguud ʔiza kaanit jakittit-u mawguuda* we consider presence here as purely a matter of form, i.e. the official is considered to be present if his jacket is.

¶ ʕay (or *ʕay) naʁam* it is true ... (but) ..., as in *ʕay naʁam ʔinni ḍarabt-u laakin huwwa yistaahil* it's true I hit him but that's only what he deserves. - ʕay or *(ʕay) w-allaahi* (1) honest to God! (2) yes indeed! how true that is!

ء ى ب see ء و ب: *ʔiyaab*

ء ى د see also ى د and ى د د

إيد *ʔiid* /fem n, pl *ʔideen, ʕayaadi*, w pron suff *ʔidee-* (1st sing *ʔiday-ya*, 3rd pl also *ʔiden-hum*)/ **1** hand, (loosely also) wrist, arm. *xaduu min ʔiid-i* they took it out of my hand. *rigiʁ wi-ʔiid-u faḍya* he returned empty-handed. *baʠit zayy il-ʁagiina f-ʔiid-u* she became like putty in his hands. *laabis saaʁa f-ʔiid-u* wearing a watch on his wrist. *ʔil-mawḍuuʁ fi-ʔiid-i* the matter is in my hands, I have taken charge of the matter. *ʁala ʔiid-ak iʃ-ʃimaal* on your left. *sitt[a] ʁaguuza masnuuda ʁala ʔiid-u* an old lady leaning on his arm. *bi-yiʁmil-ha b-ʔiid-u* (1) he makes them himself. (2) he makes them by hand. *bi-yiʁmil-ha ʁala ʔiid-u* (1) he makes them by hand. (2) he has them made under his supervision. *ʔiid ʁala ʔiid tisaaʁid [prov]* many hands make light work. *ʔilli ʔiid-u fil-mayya miʃ zayy illi ʔiid-u fin-naar [prov]* (he whose hand is in water is not like him whose hand is in fire) ≈ you can't advise one in a situation different from your own. ‖ *midd[i] ʔiid-ak* (1) help yourself! (as an invitation to eat). (2) lend a hand! join in! - *ʔiid-u xafiifa* he's light-fingered - *ʔiid-u naʃʃa* he's tight-fisted. - *ʔiid-u ṭwiila* he's a thief. - *ʔiid-u waʠfa* he's a poor worker. - *ʔiid-u salka* he's a skilled worker. - *ʔiid-u maxruuma* or *ʔiid-u sayba* he's open-handed, he's extravagant. - *ʔilli f-ʔiid-u miʃ lu* he's very generous. - *ʁala ʔiid(-)* in (his) presence, in front of (his) eyes, as in *xallii-k ʁala ʔiid-u lamma yxallaṣ iʃ-ʃuɣl* stay close by him till he finishes the job, *kull-u kaan ʁala ʔiid-ak* it all happened in your presence. - *ʁala ʔiid-ak ya ʔuṣṭa* stop here, driver! - *lamma tuʠaf ʁala ʔiid-ak [prov]* (when you stand on your hand) ≈ when pigs fly. - *ʁala ʔideen* at the hands of, by way of, as in *ʔil-ḥaẓẓ[i] gaa-li ʁala ʔideen waaḥid ʏariib* good luck came to me at the hands of a stranger. - *ṭalab ʔid-ha* he asked for her hand in marriage. - *ʕagwaz-hum fi-ʔidee-hum* their husbands are under their thumbs. - *fi-ʔiid-(u) ʔinn* ... it is in (his) power to ..., as in *fi-ʔiid-ik ʔinnik tinawwari ḥayaat-ik* it's in your power to brighten your life. - *ʔiid-ak ʁala* give, hand over! as in *ʔiid-ak ʁala ʃilin* hand over five piastres! - *ʔiid wara w-ʔiid ʠuddaam* empty-handed. - *ʕana min ʔiid-ak di l-ʔiid-ak di* I'm completely at your disposal. - *ʔiid-i ʁala ʔiid-ak* lead on! - *ʔiid-i f-ʔiid-ak* let's co-operate! - *huwwa ʔiid-i w-rigl-i* I can't do without him. - *la min ʔiid-u wala min rigl-u* in no way con-

nected with him. - *ʃiid-ak wil-ʃarḍ* it's a hopeless case. *ʃiid-ak minnu wil-ʃarḍ* he's a hopeless case, you can't depend on him for anything. **2** foreleg (of an animal). **3** handle (cf *yadd*). *ʃiid miqaʃʃa* broom handle. ‖*ʃiid hoon* pestle.

أيّد ʃayyid /vt/ to support. - vn *taʃyiid*; ava *miʃayyid*.

اتأيّد ʃitʃayyid /vi/ to be supported. - iva *mitʃayyid*.

ء ي ر

إير ʃiirˀ /n pl *ʃuyuur*/ penis.

ء ي ز ي

إيزي ʃiizi <Engl> **1** /adj invar/ easy, relaxed. *bint*^{i} *ʃiizi* an easy lay. **2** /adv/ easily, relaxedly. *xud il-ħikaaya ʃiizi* take the matter simply.

ء ي س [1]

آيس ʃaayis /vi/ to act with desperate courage, take a great risk when faced with no alternative. *tigii-f niʃaayis - ya qaatil ya maqtuul* let's do our damnedest - all we have to lose is our lives! - vn *miʃaysa*; ava *miʃaayis*.

ء ي س [2] see ء ا ي س : *ʃaayis*

ء ي ش

أيش ʃeef /interrog pron/ what? (mainly in proverbs and set phrases). *ʃeef ɛarraf-ak* how did you find out? *ʃeef tiɛmil il-maʃta fil-wiff il-ɛikir [prov]* (what can the tire-woman do with an ugly face?) ≈ you can't make a silk purse out of a sow's ear. *ʃeef gaab li-gaab* ≈ there is no comparison, the one is not a patch on the other. *ʃeef ħaal law* ... what would happen if ..., as in *ʃeef ħaal baqa law libist-i-lku l-badla l-kuħli* (if you think I look smart now) what would you say if I put on the navy-blue suit for you!

إشمعنى ʃiʃmiɛna /interrog part/ **1** why (this) and not another? *ʃiʃmiɛna ʃana* why pick on me? **2** response formula in *qafya* jokes (see *qafya*).

ء ي ض

أيضا ʃayḍanˀ /adv/ also.

ء ي ل ا

أيلا ʃeela <prob Copt>: *ʃeela ʃubb, ʃeela ʃubba* ≈ heave ho! - also *heela*.

ء ي ل ي –

آيلاينر ʃaylaynar <Engl> /n/ eyeliner.

ء ي م

أويمة ʃuyma <T *oyma*> /n/ **1** wood-carving, decorative relief work in wood. **2** plastic mouldings for decorating wall panels, fitted cupboards, ceiling, etc.

أويمجى ʃuymagi /n pl *-yya*/ wood-carver, carpenter specializing in decorative relief work.

ء ي ن [1]

أيون ʃayuun <Engl> /n pl *-aat*/ *[elec]* ion.

أيّن ʃayyinˀ /vt/ to ionize. - vn *taʃyiin*; ava *miʃayyin*.

اتأيّن ʃitʃayyin /vi/ to be ionized. - iva *mitʃayyin*.

ء ي ن [2]

أيون ʃuyun, ʃuyin <T *oyun*> /n pl *-aat*/ **1** ordinary win in backgammon, where the loser has succeeded in removing at least one of his men from the board (cf *mars*). **2** *[coarse slang]* an instance of sexual intercourse, a lay.

ء ي ه

أيه ʃeeh **1** /interrog pron/ what? *bi-tquul ʃeeh* what do you say? *niɛmil ʃeeh* what can (or: shall) we do? *ʃeeh il-balaawi di* what's all this trouble? *ħa-tiqlibii-ha ɤanim*^{i} *walla ʃeeh* are you going to turn nasty about it, or what? *feen il-filuus. - filuus ʃeeh* 'Where's the money?' 'What money?' *maɛaak filuus qadd*^{i} *eeh* how much money do you have with you? ‖ *ʃiħna f-ʃeeh walla f-ʃeeh* what's that got to do with the matter in hand? *- ya-bn il-ʃeeh* you son of a so-and-so! **2** /rel pron/ *xallii-na nfuuf ʃintu ɛamaltu ʃeeh* let's look at what you've done.

ء ي و ه

أيوه ʃaywa <Copt> /interj/ yes.

ء ي ي [1]

أيّ ʃayy **1** /adj invar/ any. *fi-ʃayy*^{i} *waqt* at any time. *ɛala ʃayy*^{i} *ħaal* in any case. *ʃayy*^{i} *waaħid* anyone. *ɛandak ʃayy*^{i} *fikra ɛan il-ʃuwaḍ* do you have any idea about the rooms? **2** /interrog adj invar/ what? *bi-ʃayy*^{i} *ħaqq* by what right?

أيّها ʃayyuha /as *ʃayy* **1**, but emphatic/ any ... at all. *ʃayyuha ħaaga* any old thing. *fi-ʃayyuha maɛħad* in some institute or other. *laa ʃinta wala tafiida wala simsima wala ʃayyuha maxluuqin kaan* not you, nor Tafida, nor Simsima, nor any living soul.

ء ي ي [2]

أيّ ʃayy sound expressing pain.

ء ى ى ا

إيّا ʔiyyaa- **1** /w 3rd pers suff/ demonstrative particle signalling identity (often with a pejorative connotation). *ʔil-bint iyyaa-ha* that girl - you know who. *wirk il-wizza ʔiyyaa-ha* the leg of that very same wretched goose (we've all been talking about). *ʔig-gamaaʕa ʔiyyaa-hum* these people, you know whom I mean.

2 /w 2nd pers suff/ introductory particle signalling prohibition. *ʔiyyaa-k tihawwib gamb il-baab* don't you dare go near the door! *ʔiyyaa-k hiyya tiigi hina taani* she'd better not come here again! **3** /w 2nd pers sing suff/ introductory particle signalling hopefulness. *ʔiyyaa-k yikuunu r-rukkaab kull-u-hum sulaam* I hope all the passengers are safe!

ء ى ى ا ه

أيّاه ʔayyaah /interj/ *[children]* **1** what a shame! **2** you're going to be in trouble!

ء ى ى ه ا see ء ى ى ¹: *ʔayyuha*

ء ى ى و ب

أيّوب ʔayyuub /prop n/ Job. *ṣabr ʔayyuub* the patience of Job.

ء ى ى و ه

أيّوه ʔayyuuh <Copt> *[non-Cairene]* interjection signalling **1** emphatic confirmation. *bi-tifham fil-ʕarabiyyaat. - ʔayyuuh ʔilla b-afham fil-ʕarabiyyaat* 'Do you know anything about cars?' 'You bet I know about cars!' **2** forceful intent. *ʔayyuuh ya gidʕaan ḥ-aḍrab-u ḥittit ʕalʕa* just wait, lads, till you see the beating I give him!

ب

(ب)

ب *bi-*[1] /before 1st person sing *b-*/ verb prefix with imperfect indicating continuous or habitual action. *bi-tiʕmil ʃeeh* what are you doing? *b-aruuḥ hinaak kull[i] yoom* I go there every day. *bi-yikkallim ʕarabi kwayyis* he speaks Arabic well. *kaan bi-yidris barra* he was studying abroad.

ب *bi-*[2] /w 1st person sing pron suff *biyya*, w 3rd person sing masc *bii*; other pron suffs *bi(i)-*/ preposition indicating **1** instrument or means. *m-aḥibb[i]-ʃ ʃasaafir bil-ʕaṭr* I don't like to travel by train. *mumkin yitḥassin bit-tamriin* he may improve with training. *bi-tifṭar bi-ʃeeh* what do you have for breakfast? **2** cause. *mabsuuṭ bi-wuguud-ak* happy you are here. *miʃ ʕaadir ʃaʕul-lak farḥit-i biik ʕadd[i] ʃeeh* I can't tell you how happy you make me! *nifs-i f-ʕayyil ʃafraḥ bii* I am longing for a child to rejoice in. **3** manner or mode. *gayy[i] b-surʕa* coming quickly. *kallim-ha b-ḫinniyya* he spoke to her kindly. *ḥaẓẓ-u bil-maʕluub* he is unlucky. *xadt ik-kitaab minnu b-diḥk* I kidded him into giving me the book. *ṭabaxit bi-nifs* she cooked willingly. **4** accompaniment or concomitance. *ʃaay bi-laban* tea with milk. *xud iʃ-ʃaʕʕa bil-ʕaff illi fiiha* take the flat together with the furniture in it. *fii ḥadd[i] hina bil-ʃism[i] ʕa* is there anybody here with that name? ‖ *la biyya wala ʕalayya* minding my own business. - *biina* or *yalla biina* ≈ let's go! - *ʃahlan biik* conventional response to *ʃahlan wa-sahlan*. **5** span of time or occasion in time. *yiṣuum bin-nahaar wi-yifṭar bil-leel* he fasts by day and breaks his fast at night. **6** equivalence in sale or recompense. *ʃil-ʕeen bil-ʕeen* an eye for an eye. *ʃiftareet kiilu ʕuuṭa b-xamsa saaɣ* I bought a kilo of tomatoes for five piastres. *ḍufr-i b-raʕabt-u* (my fingernail is worth his neck) ≈ he's not worth my little finger. *ʃitneen fi-xamsa b-ʕaʃara* two fives are ten. **7** degree of separation, amount of difference. *biʕiid ʕannu b-ʃarbaʕt imtaar* four metres away from it. *ʃakbar minnak bi-yoom yiʕraf ʕannak bi-sana [prov]* (he who is) older than you by one day knows more than you by a whole year. **8** standard of measurement, criterion. *bi-ybiiʕ il-ʕumaaʃ bil-mitr* he sells the cloth by the metre. *ʃil-iʕtiqaad da xaaṭiʔ bil-mafhuum ig-gidiid* this belief is wrong according to the new understanding. *goz-ha bi-yɣiib bis-sana* her husband stays away for a year at a time. *ʃana b-aʃtaɣal bil-yomiyya* I work by the day (i.e. I am paid by the day). *ʕasuu bil-milli* (1) they measured it by the millimetre. (2) they measured it accurately. **9** sequence or succession. *ʃiddii-ni taʕriir yoom bi-yoom* give me a report day by day. *ʃimʃi xaṭwa b-xaṭwa* ≈ go very slowly. *mallii-ni kilma b-kilma* dictate to me very slowly. *xallii-na niṣṣarraf waḥda b-waḥda* ≈ let's act very cautiously.

¶ ... *bi-ma fii-ʃ* ... including ..., as in *ʃil-luḥuum mamnuuʕa bi-ma fiiha s-samak* flesh is forbidden, including fish. - *bi-ma ʃinn* /conj/ since, in view of the fact that, as in *bi-ma ʃinnak ma-gibt[i]-ʃ huduum-ak tibʕa trawwaḥ* you go home since you haven't brought your clothes. - *bi-duun* see *duun*[1].

ب ا ء

باء *baaʔ* /fem n, pl *-aat*/ second letter of the Arabic alphabet. - also *bih, beeh*.

ب ا ب see ب و ب : *baab*

ب ا ب ا

بابا *baaba* <Gr *pappas*, cf also P and T *baba*> /n/ **1** /pl *babawaat*/ *[Chr]* pope, pontiff, patriarch. **2** /no pl/ daddy, father. ‖ *baaba ɣannuug* dip made of sesame paste, garlic and mashed roasted egg-plant. - *ʕala baaba* ≈

whose leg do you think you're pulling?! **3** /no pl/ affectionate form of address to the very young.
بابوى *baabawi* /adj */ *[Chr]* papal, patriarchal.

² (ب ا ب ا)
بابة *baaba¹* /n pl *-aat*/ *[obsol]* text of a shadow puppet play.
بابه *baaba²* <Copt> /n/ second month of the Coptic year (mid-October to mid-November). *baaba xuff^i* (or *ʕudxul) wi-ʤfil il-bawwaaba* Baaba, come in and close the door (against the cold). *zarʕ^i baaba yixlib innahhaaba* the crops planted in Baaba (are so great that they) overwhelm plunderers.

ب ا ت ا
باتا *baata: ḥaata baata* see *ḥaata*.

ب ا ح see ب و ح : *baaḥa*

ب ا د ى
بادى *baadi* /nonce word/: *ḥaadi baadi siidi mḥammad il-baʁdaadi* (or *il-buʁdaadi) ʃaal-u w-ḥaṭṭ-u ʕalaa-di* children's counting rhyme ≈ eenie-meenie-mynie-mo etc.

(ب ا ر)
بار *baar¹* <prob Engl> /n pl *-aat*/ **1** bar, bar room. **2** drinks cupboard.
بار *baar²* <poss Fr *barre*> /n/ *[auto]* axle.
بارة *baara* <T *para*> /n pl *-aat*/ *[obsol]* one-fortieth of a piastre, one-fortieth of a piastre piece.

ب ا س see ب ء س : *baas*

ب ا ش ا
باشا *baaʃa* <T *paşa*> /n pl *-waat*/ **1** Pasha, formerly a title of, and form of address and reference to, highest ranking officers and officials, now commonly used in respectful address to high officials (particularly police officials). **2** term of address used to both men and women to indicate familiarity. *ʃuuf ya baaʃa - ʕin kaanit ʕuxt-ak ʤayza tsaafir laazim tisaafir maʕaaha* look, old chap, if your sister wants to go on a journey, you must go with her. ‖ *ya baaʃa* flirtatious remark to a woman in the street ≈ how pretty! **3** supercilious person. *ʕaxuu-k da baaʃa* that brother of yours doesn't give a damn about anything.

¹ ب ا ص
باص *baaṣ* (also *bas*) <Fr *basse*> /n pl *-aat*/ *[mus]* **1a** double-bass. **1b** viola da gamba, cello. **2a** bass line in music. **2b** left hand music for piano. **2c** left hand bass buttons on an accordion. - /adj invar/ **3** bass.

² ب ا ص see ب ص ى : *baaṣa*

¹ ب ا ط
باط *baaṭ¹* /coll n/ sycamore figs, not slit open when small, and therefore inedible when ripe.
باطة *baaṭa¹* /pl *-aat*/ unit noun of *baaṭ¹*.

² (ب ا ط)
باط *baaṭ²* /n pl *-aat*/ **1** armpit. ‖ *baaṭ-u win-nigm* he has nothing to his name, he's flat broke. - *xaḍ(-u)* (or *gaab (-u)) taḥt^i baaṭ-u* to gain control over (s.o.), as in *ʧabʕan ḥaal-u maaʃi ʕiza kaan waaxid ḥatta l-mudiir taḥt^i baaṭ-u* of course he's doing all right since he's got even the director under his thumb. - *xaff^i fii baaṭ* or *nizil wayyaa baaṭ* he wrestled with him (using his arms). **2** *[naut]* chine.
باطة *baaṭa²* <It *patta*>: *ʧiliʕ baaṭa* (1) to come out a draw, as in *ʧilʕu baaṭa* they drew, *ʕil-ʕaʃara ʧilʕit baaṭa* the round ended in a draw. (2) to be fruitless (of effort), be vain (of an attempt).

ب ا ط س
باطس *baaṭis* /n/ strip of leather between the sole and insole of a shoe.

ب ا ع see ¹ ب و ع : *baaʕ¹*

ب ا غ
باغ *baaɣ* <T *bağa*> /n/ **1** tortoise-shell. **2** celluloid.
باغة *baaɣa* /n pl *-aat*/ **1** piece of celluloid. *baaɣit saaʕa* watch glass. **2** collar stay, collar stiffener.

ب ا ق
باق *baaq* <perh Copt>: *ʕarḍ^i baaq* land into which the remains of a *barsiim* crop have been ploughed to fertilize it.

ب ا ك
باك *baak* <Engl> /n pl *-aat*/ **1** *[soccer]* back. *baak raayit* right back. *sird^i baak* third back. **2** backhand in tennis, ping-pong, and other racket sports.

ب ا ك م
باكم *baakim* <perh Engl *vacuum*> /n/ hydraulic system. *zeet baakim* hydraulic fluid.

ب ا ك و
باكو *baaku* <It *pacco*> /n pl *bawaaki, bakuwaat, bakaawi↓*/ packet, pack. *bawaaki duxxaan saayib* packets of loose tobacco. *baaku faay* packet of tea.

ب ا ل ١
بالة *baala١* <It *balla*> /n pl *-aat*/ bale. *baalit quṭn* a bale of cotton. ‖*lissa ṭaaliɛ mil-baala* brand new.

ب ا ل ٢ see ب ل ى ٢ : *baal١*

ب ا ل ت
بالت *baalit* <perh Fr> /n pl *-aat*/ (painter's) palette.

ب ا ن
بان *baan* /n/ *[bot]* Egyptian willow (Salix aegyptica). *ruṣn il-baan* epithet for a woman with a slender and graceful figure.

ب ا ن ا
بانا *baana: ḥaana w-baana* this and that. *sibna-ḥaa-lak been ḥaana w-baana* we've left the matter for you to decide between this (solution) and that.

ب ا ه
باه *baahˀ* <Copt> /n pl *-aat*/ penis.

ب ا ى
باى *baay* <prob Copt>: *ya baay* exclamation of incredulous dismay. *da b-yiɛmil ɛamaayil - ya baay* or *ya baay ɛala ɛamayl-u* my! he does such outrageous things!

ب ا ى ب see ب ى ب : *baayib*

ب ء ب ء
بأبأ *baʃbaʃ* /vi/ to bleat. - vn *baʃbaʃa*; avn *mibaʃbaʃ*.

ب ء ر see ب ى ر ١ : *biir, buʃra, buʃri*

ب ء س
بأس *baʃs, baas: la baas* or *la baʃsᵃ ɛala* ... a get-well wish ≈ I hope it's nothing serious. *la baʃsⁱ bi-ˀ* not insignificant, not bad, as in *kimmiyya la baʃsⁱ biiha* a not insignificant quantity, not a bad quantity.
بؤس *buʃs* /n/ misery. - /adjectivally/ *ɛiiʃa buʃs* a miserable life.

ب ء و ن
بؤنة *baʃuuna* <Copt> /n/ tenth month of the Coptic year (June to July). *baʃuunit il-ḥagar* stone-dry Ba'una. *fi-baʃuuna la yinḍirib ṭuub wala titɛimil muuna* in Ba'una mud bricks should not be set, nor should mortar be made. *baʃuuna bi-tnaffif il-mayya miz-ziir* Ba'una dries the water out of the *ziir*.

ب ب ا ظ
بباظ *babaaẓ* /coll n/ papaya (Carica papaya).

ب ب ا ى ا
بايا *babaaya* <Sp> /coll n/ papaya.

ب ب ب
ببّة *babba* /interj/ *[children]* ≈ I am cross with you!
ببّة *bubba* /interj/ *[children]* warning to a child in danger of falling.

ب ب ت ر
ببترة *bibitra, pipitra* <Fr *pupitre*> /n pl *-aat*/ music stand.

ب ب ب غ
ببّغان *babbaɣaan* /n pl *-aat*/ parrot. - also *baɣbaɣaan*.

ب ب ل و ه
بيلوه *bibilooh* <Fr *bibelot*> /n pl *-aat*/ knick-knack.

ب ب ل ى ن
بوبلين *bubliin* <Engl or Fr> /n pl *-aat*/ poplin.

ب ب ن ا ج
بوبيناج *bubinaaj* <Fr *bobinage*> /n/ *[elec]* **1** coil. *silk il-bubinaaj* (insulated) wire for coils. **2** coil system, armature. - also *bubiina*.

ب ب و ر
بابور *babuur* (also *baguur↓*) <perh It *vapore*> /n pl *bawabiir (bawagiir), bawabiir (bawagiir)*/ **1** (primus) stove. *babuur sibirtu* spirit stove. *babuur gaaz* primus stove. **2** ship, motor-driven vessel. **3** locomotive, train. *babuur biḍaaɛa* goods train. *babuur ʕiksibrees* express train. **4a** engine or motor. *babuur ɛarabiyya* car engine. **4b** any of a variety of machines driven by a motor or engine. *babuur il-ḥariiqa* fire-engine. *babuur ṭiḥiin* grist mill. *babuur ḥaliig* ginning factory. *babuur zalaṭ* steamroller. - also *wabuur*.

ب ب و ن ج
بابونج *babuunig: fiiḥ babuunig* camomile. - also *babuuni*.

ب ب و ن ى
بابونى *babuuni: fiiḫ babuuni* <P *bâbûna*> camomile. - also *babuunig*.

ب ب ى ن
بوبينة *bubiina* <It *bobina*> /n pl *-aat*/ **1** bobbin, reel, spool. **2** *[elec]* coil. - also *bubinaaj*.

ب ب ى ه [1]
ببيه *bibeeh* <Fr *bébé*> /n pl *-aat*/ baby.
ببهاتى *bibehaati* /adj/ pertaining to babies, babyish.

ب ب ى ه [2]
بيبيه *bibiih* <Fr *pipi*> /n/ *[children]* urine. *ʕamal bibiih* to urinate.

ب ب ى و ن
بيبيونة *babyuuna* <Fr *papillon*> /n pl *-aat*/ bow tie.

ب ت ا ج
بوتاج *butaaj* <Fr *potage*> /n/ soup.

ب ت ا س
بوتاس *butaas* <Fr *potasse*> **1** potash. **2** lye. ‖ *butaas ʃamrikaani* a stain remover made from lye. - also *buṭaas*.

ب ت ا ع
بتاع *bitaaʕ* /in constr; fem *bitaaʕit*, pl *bituuʕ*/ nominal, in free and appositional constructions, indicating **1a** possession. *ʃil-musaddas bitaaʕ-i* (1) my pistol. (2) the pistol is mine. *ʃiʃ-ʃanṭa btaʕit-ha* (1) her bag. (2) the bag belongs to her. *ʃik-karaasi btuʕ-na* (1) our chairs. (2) the chairs are ours. **1b** concomitance. *ʃil-faraamil bitaaʕit il-ʕarabiyya* the car brakes. *ʕaff[i] zayy[i] btaaʕ ʃoḍt-ak* furniture like that in your room. **2a** association. *ʃir-raagil bitaaʕ il-ʕuuṭa* the man with the tomatoes, the tomato vendor. *bitaaʕ il-laban* the milk man. *bituuʕ il-fann* those who have to do with art, i.e. artists, art dealers etc. *raagil bitaaʕ rabb-i-na* a pious man. *ʃinti ya btaaʕit ḫasan* you, Hasan's woman! **2b** /w indef n/ ascribability, tendency or inclination. *da kalaam bitaaʕ sittaat* that's womanish talk. *miʃ bitaaʕ masʃuliyya* an irresponsible type. *bitaaʕ ʃafkaar* shrewd. *ʃana miʃ bitaaʕ gawaaz* I'm not the marrying type. *fitiwwaat bituuʕ xinaaq* quarrelsome bully-boys. *bitaaʕ niswaan* philanderer. ‖ *bitaaʕ ʕiyaal* pederast, child molester. - *bitaaʕ ʃeeh* (1) why? what for? as in *bitaaʕ ʃeeh taaxud gineeh* why should you take a pound? (2) how come? as in *bitaaʕ ʃeeh ma-ʕult[i]-luu-ʃ* how come you didn't tell him? **3** genitive relationship. *ʃis-sittaat bituuʕ ʃingiltira* the women of England, English women. *ʃil-ʃasaar bitaaʕit maṣr* Egypt's historical monuments. *bitaaʕ zamaan* of a long time ago, of the old days. **4** approximation. *bitaaʕ saaʕa* about an hour. *gibt[i] btaaʕ kiilu* I brought about a kilo. — /standing independently/ **5** (and) what not, (and) so on. *ruḫna s-suuq wi-btaaʕ* we went to the market and so on. *yimkin nilaaqi ḫittit gild[i] (w-)bitaaʕ* we may find a bit of leather or what not. **6** *ʃil-bitaaʕ* **6a** the thingumajig, the whats-its-name, the doings. **6b** *[euphem]* sexual organ.

ب ت ت [1]
بتّ *batt[i] (i)* /vi/ to come to a decision, reach a decisive conclusion. *laazim nibitt[i] fil-mawḍuuʕ da* we must make up our minds about the matter. *lagnit il-batt* the decision-making committee. *mamnuuʕ manʕ[i] baatt* strictly forbidden. - vn *batt*; ava *baatt*; pva *mabtuut*.
بتّة *batta[i]* instance noun of *batt*.
بتاتا *bataatan↑* **1** /adv, always w neg/ ever, at all, whatsoever. *ma-fii-ʃ ʃayy[i] ʕlaaqa bataatan been il-ʃiʃtirakiyya wid-diin* there is no relationship whatsoever between socialism and religion. **2** /interj/ certainly not! not at all! *bi-tiddaayiq min wuguud-i fil-beet. - ʃabadan w-allaahi - bataatan* 'Are you annoyed at my being in the house?' 'Not at all! No no!'
اتبتّ *ʃitbatt* /vi/ (impersonal) passive of *batt*. *ʃil-mawḍuuʕ da tbatt[i] fii walla la* has that matter been settled or not? - iva *mitbatt*.
انبتّ *ʃinbatt* = *ʃitbatt*. - iva *minbatt*.

ب ت ت [2] see also ب ن ت [1]
بتّ *batt[2] (i)* /vi/: *batta tbitt-ak (w-aṣbaḫ sitt-ak)* indignant response by one addressed as *ya bitt* (q.v. under ب ن ت [1]).
بتّة *batta[2]: batta tbitt-ak* see *batt[2]*.
بتّ *bitt[i]* see *bint*.

ب ت ت [3]
بتّ *bitt[2]: bitt il-widn [anat]* mastoid process. *ḍarab-hum ʕala bitt[i] wdan-hum* he boxed their ears.
بتّية *bittiyya* /n pl *bataati, bittiyyaat*/ wooden tub.

ب ت ت ا و
بتّاو *bittaaw, battaaw* <perh Copt> /coll n/ type of bread made of Indian millet (*dura ʕweega*).
بتّاوة *bittaawa, battaawa* /unit n, pl *-aat*/ a loaf of *bittaaw*.
بتّاوى *bittaawi, battaawi* = *bittaaw*.
بتّاوية *bittawiyya, battawiyya* = *bittaawa*.

ب ت ت ك
بتتك *batatak: ḥatatak batatak* rapaciously, feverishly, frantically. *nizil ɛala l-ɛeeʃ ḥatatak batatak* he gobbled up the bread ravenously. *nizlit ɛalee ḍarb[a] ḥatatak batatak* she beat him frenziedly.

ب ت ج ا ز
بوتاجاز *butagaaz* <Fr *Butagaz*> /n/ **1** trade name under which bottled butane gas is marketed for commercial use. **2** /pl *-aat*/ cooking stove. *butagaaz bikkahraba* an electric cooker.

ب ت ر
بتر *batar, batarˆ (u)* /vt/ *[surg]* to amputate. - vn *batr, batr*; ava *baatir, baatir*; pva *maḥtuur, mabtuur*.
اتبتر *ʔitbatar, ʔitbatar* /vi/ to be amputated. - iva *mitbitir*.

ب ت ر و ل
بترول *bitrool* <Fr *pétrole*> /n/ oil, petroleum.
بترولى *bitrooli* **1** /adj/ pertaining to petroleum. *mawaddˈ bitroliyya* petroleum products. **2** /adj invar/ smoky-grey in colour.

ب ت ر و ن
بترون *batroon* <Fr *patron*> /n pl *-aat, -aat*/ paper pattern (for a dress etc.).
بترونة *batroona* <It *padrona*> = *batroon*.

ب ت ر ى
باترى *batari* <Fr *batterie*> /n/ set of drums.

ب ت ر ى ش
بتريش *butriiʃ* <It *pulitrice*> /n/ *[eng]* polishing machine, buffer.

ب ت ر ى ن
بترينة *batriina* <It *vetrina*> /n pl *batariin, batrinaat*/ **1** show-case. **2** shop-window. **3** glass-fronted set of shelves fixed to a wall by the road-side to display small items for sale. - also *vatriina*.

ب ت ش و – see ب ش : *bitʃawiiʃ*

ب ت ع [1]
باتع *baatiɛ* /adj */ **1** powerful, effective (especially of a saint). *sirr-u baatiɛ* his power is overwhelming. ‖ *ʔil-batɛa* epithet of Sayyida Zaynab. **2** having the power to read minds, tell the future etc, (of a sorcerer or magician).

ب ت ع [2] see ب ت ا ع : *bitaaɛ*

ب ت ف و ر [1]
بتيفور *bitifuur* <Fr> /coll n/ petits fours.
بتيفورة *bilifuura* /unit n, pl *-aat*/ a petit four.
بتيفوراية *bitifuraaya* /unit n, pl *-aat*/ = *bitifuura*.

ب ت ف و ر [2]
بتفورة *batafuura* <perh It *buttafuori*> /n pl *-aat*/ davit.

ب ت ق
بوتقة *butɋa* /n pl *bawaatiɋ*/ crucible, melting-pot. - also *budɋa*.

ب ت ل
بتول *batuul* /masc and fem adj/ celibate, virgin. ‖ *ʔil-batuul* the Virgin (Mary).
بتوليّة *batuliyya* /n/ *[Chr]* celibacy, virginity.
اتبتّل *ʔitbattil* /vi/ **1** *[Isl]* to be devout in worship. **2** *[Chr]* to devote oneself to a life of celibacy or virginity. - vn *tabattul*; ava *mutabattil*.

ب ت ل ت ت
بتلّتة *batalitta* <Fr *pâtelette*> /n pl *-aat*/ flap or fly on clothing.

ب ت ل ل
بتللو *bitillu* <It *vitello*> /n/ veal. - /adjectivally/ *ʔil-laḥm il-bitillu faḥḥ il-ʔayyaam di* veal has become scarce these days.

ب ت ل ى
بوتليا *butilya* <It *bottiglia*> /interj/ bottles! (rag-and-bone man's cry).

ب ت م see ب ت ن : *bitm, battaama, battim, ʔitbattim*

ب ت م ى ن
بتومين *bitumiin* <Engl> /n/ bitumen.

ب ت ن
بتن *bitn* (also *bitm*) <Copt> /n pl *butuun*/ *[agric]* ridge between furrows or patches of cultivation (see Pl.E, 20).
بتنيّة *bitniyya* = *bitn*.
بتّانة *battaana* (also *battaama*) /n pl *-aat, batatiin*/ *[agric]* implement for making ridges in the earth to mark off irrigation units (see Pl.D, 5).
بتّن *battin* (also *battim*) /vt/ to make ridges in (fields) to

mark off the units of irrigation. - vn *tabtiin*; ava/pva *mibattin*.
اتبتّن *ʔitbattin* (also *ʔitbattim*) /vi/ passive of *battin*. - iva *mitbattin*.

ب ت ن ا ج
باتيناج *batinaaj, patinaaj* <Fr *patinage*> /n/ **1** skating. **2** /pl *-aat*/ skating-rink.

ب ت ن ج – see ب د ن ج: *bitingaan, bitingaana, bitingaani*

ب ت ن س –
بتونسليه *batunsaleeh* <Fr *batons salés*> /coll n/ long salted pastry stick(s).

ب ت ى ر
بتير *bitiir* <perh Fr *patère*> /n pl *bitaayir*/ *[elec]* block on which a ceiling-rose is mounted.

ب ت ى ك
بتيك *butiik* <Fr> /n pl *-aat, bawatiik*/ boutique.

ب ث ث see ب س س[2]

ب ث ر see ب س ر[1]

ب ث ق see ب س ق

ب ج ا م
بيجامة *bijaama, bigaama*↓ <perh It *pigiama*> /n pl *-aat*/ pair of pyjamas.

ب ج ح
بجح *bigiḥ* /adj */ impudent.
أبجح *ʔabgaḥ* /el/ more/most impudent.
بجاحة *bagaaḥa* /n/ impudence.
باجح *baagiḥ*[1] /adj */ impudent.
بجّح *baggaḥ* /vi/ to behave impudently or insolently. *ma-tbaggaḥ-fʲ fiyya* do not be rude to me! - vn *tabgiiḥ*; ava *minaggaḥ*.
اتبجّح *ʔitbaggaḥ* /vi/ to behave impudently or insolently. - ava *mitbaggaḥ*.
باجح *baagiḥ*[2] /vi/ to behave impudently or insolently. *qaʕad yibaagiḥ maʕa ʔabuu* he went on answering his father back. - vn *mibagḥa*; ava *mibaagiḥ*.
اتباجح *ʔitbaagiḥ* /vi/ to behave impudently or insolently. - ava *mitbaagiḥ*.

ب ج د ى
بيجوديه *bigudya* <Fr *bigoudi*> /coll n/ hair-roller(s).

ب ج ع
بجع *bagaʕ* /coll n/ **1** swan(s). **2** *[rur]* pelican(s).
بجعة *bagʕa* /unit n, pl *-aat*/ **1** a swan. **2** *[rur]* a pelican.

ب ج ل
بجّل *baggil*↑ /vt/ to honour, venerate. - vn *tabgiil*; ava *mibaggil*; pva *mubaggal*.

ب ج م
بجم *bagam* /n invar/ oaf, dolt, blockhead.
بجّم *baggim* /vt/ **1** to dumbfound, make (s.o.) shut up. **2**↓ to put under anaesthetic. - vn *tabgiim*; ava/pva *mibaggim*.
اتبجّم *ʔitbaggim* /vi/ **1** to be dumbfounded, be made to shut up. **2**↓ to be put under anaesthetic. - iva *mitbaggim*.

ب ج و ر see ب ب و ر: *baguur*

ب ج ى ه
بوجيه *bujeeh* <Fr *bougie*> /n pl *-aat*/ **1** sparking-plug. **2** candle (unit of light intensity).

ب ح ب ح
بحبح *baḥbaḥ* **1** /vt/ to loosen, make loose. *baḥbaḥ-li l-fustaan* let the dress out for me. **2** /vi/ **2a** to let oneself go, act without restraint. *baḥbaḥi fwayya wi-dḥaki* relax and have fun! **2b** to spend money freely. - vn *baḥbaḥa*; ava/pva *mibaḥbaḥ*.
مبحبح *mibaḥbaḥ* /adj */ **1a** comfortably off, in easy circumstances. **1b** out-going, easy-going, generous-natured. **2a** ample, loose. *fustaan mibaḥbaḥ* a loose-fitting dress. **2b** ample, generous. *kiilu mbaḥbaḥ* a good kilo. *ʔig-gazzaar da wazn-u mbaḥbaḥ* that butcher is always generous when he weighs (the meat).
بحبوح *baḥbuuḥ* /adj/ easy-going, amiable.
اتبحبح *ʔitbaḥbaḥ* /vi/ **1** to be loosened. **2** to let oneself go, act without restraint. - ava/iva *mitbaḥbaḥ*.

ب ح ت
بحت *baḥtʲ*↑ /adj/ pure, theoretical. *riyaaḍa baḥta* pure mathematics. - /adverbially/ *da ṭabʕan ʔigraaʔ maali baḥt* this of course is a purely financial procedure.

ب ح ث see ب ح س

ب ح ح[1]
بحّ *baḥḥ*[1] /coll n/ ducks.
بحّة *baḥḥa*[1] /unit n, pl *-aat*/ a duck.
بحّاية *baḥḥaaya* /n pl *-aat*/ a duck.

ب ح ح[2]

بحّ *baḥḥ*[2] *(i)* /vt/ to cause to become hoarse. *ʕana baḥḥeet ṣoot-i ɛaleek* I lost my voice calling you. - vn *baḥḥ, baḥaḥaan*; ava *baaḥiḥ*; pva *mabḥuuḥ*.

بحّة *baḥḥa*[2] /n/ **1** hoarseness. **2** voice timbre.

اتبحّ *ʔitbaḥḥ* /vi/ to become or be made hoarse. - ava/iva *mitbaḥḥ*.

ب ح ح[3]

بحّ *baḥḥ*[3] <Copt> /interj/ *[children]* gone! finished!

بحّه *baḥḥa*[3] = *baḥḥ*.

ب ح ر

بحر *baḥr* /n pl *buḥuur, biḥaar, ʔubḥur, buḥúra*↓/ **1** sea. *ʔil-baḥr il-ʔabyaḍ (il-mutawassiṭ)* the Mediterranean Sea. *mayyit baḥr* salt water. *ʔirmii fil-baḥr*[i] *yiṭlaɛ wi*[i]*f-buqq-u samaka [prov]* throw him in the sea and he'll emerge with a fish in his mouth (said of one who is consistently lucky). *yiɛmil il-bahr*[i] *ṭḥiina [prov]* (he makes out that the sea is *ṭiḥiina*) ≈ he paints a rosy picture. *kalb il-baḥr* seal, sea-lion. *fiil il-bahr* elephant seal, walrus. ‖ *baḥr-u waasiɛ* it is endless or limitless, as in *ʔil-ɛilm*[i] *baḥr-u waasiɛ* knowledge is infinite. - *ʔil-baḥr*[i] *yḥibb iz-ziyaada [prov]* (the sea wants more) ≈ those who have are never satisfied. - *raagil baḥr* a very knowledgeable man. - *ʔiṛab mil-baḥr* ≈ go to hell! - *ʔilli ṣabbar-ni ɛala ḍurb il-baḥr* ... ≈ after all I've been through (I can take whatever may come). - *ma-ḥadd*[i] *-ḍ ɛarif-lu barr*[i] *min baḥr* ≈ you can't pin him down. - *buḥuur-u ɤawiiṭa* he's a very deep person. **2** river, large canal. *ʔil-baḥr* or *baḥr in-niil* the River Nile. *yiwaddii-k il-baḥr*[i] *wi-ygiib-ak ɛaṭṭaan* (he takes you to the river and brings you back thirsty) he's deceptive. **3** span or period (of time). *fi-baḥr*[i] *ṭalat siniin* within the space of three years. **4a** span (of a girder or beam). **4b** swallow, space between the sheave and the shell in a pulley-block. **5** /pl *buḥuur* only/ *[poet]* metre.

البحرين *ʔil-baḥreen* /prop n/ Bahrein.

بحرى *baḥari, baḥri* /adj/ **1a** pertaining to the sea. *ʕaɛʃaab baḥriyya* seaweed. *zuḥlifa baḥriyya* turtle. **1b** nautical. *ɛuqda baḥariyya* knot, one nautical mile per hour. **2** pertaining to a (large) river, especially the Nile. *baḥri ya samak [vendor's cry]* Nile fish! – /optionally invariable/ **3** northern. *balakoona baḥri* (or *baḥriyya*) a north-facing balcony. ‖ *ʔil-wagh il-baḥari* Lower Egypt. - *faatiḥ beet-u ɛal-baḥri* ≈ he keeps open house (of one who behaves extravagantly in order to impress). – /prep/ **4** to the north of, at the north of. *ʕana saakin baḥari l-balad* I live on the north side of town. – /adv/ **5** north(ward). *ʕana msaafir baḥari* I'm travelling north.

بحراية *baḥraaya* /n pl *-aat*/ *[rur]* ground level section of a *ɋaaɛa* containing step(s) giving access to the raised floor(s).

بحراوى *baḥraawi* /pl *baḥarwa, baḥrawiyyiin*/ **1** /adj/ pertaining to Lower Egypt, pertaining to the Delta. **2** /n/ a Lower Egyptian. *zamaan kaanit bi-tiḥṣal xinaɋaat been iṣ-ṣaɛayda wil-baḥarwa* in the past there used (often) to be quarrels between the Upper and Lower Egyptians.

بحرية *baḥriyya* /n/ navy. *ʔil-baḥriyya t-tugariyya* the Merchant Navy.

بحيرة *buḥeera* /n pl *-aat*/ lake.

البحيرة *ʔil-biḥeera* /prop n/ Beheira, a province in the western Nile Delta.

بحيرى *biḥeeri* /adj pl *baḥayra*/ pertaining to Beheira.

بحّار *baḥḥaar* /n pl *baḥḥaara, baḥḥariin*/ sailor.

بحّازى *baḥḥaari* /adj invar/ *[carp]* rabbeted. *waṣla baḥḥaari* a rabbeted joint.

بحّر *baḥḥar* /vi/ to travel northwards. - ava *mibaḥḥar*.

اتبحّر *ʔitbaḥḥar* /vi/ to become erudite, study extensively. - vn *tabaḥḥur*; ava *mitbaḥḥar*.

ب ح ث

بحث *baḥas (a)* **1** /vt/ to investigate, examine, study. *ḥa-nibḥas (f-)il-mawḍuuɛ da* we shall investigate this matter. **2** /vi/ to look, search. *bi-yibḥas ɛan ʔafkaar gidiida* he's looking for new ideas. - vn *baḥṣ*; ava *baaḥis*; pva *mabḥuus*.

بحث *baḥṣ* /n pl *buḥuus, ʔabḥaas*/ **1** research, study. *markaz il-buḥuus iz-ziraɛiyya* the Agricultural Research Centre. **2** report, study, paper.

باحث *baaḥis*[1] /n */ researcher, research worker. *baaḥis igtimaaɛí* social worker.

مبحث *mabḥas*↑ /n pl *mabaaḥis*/ *[acad]* research topic, thesis. *mabḥas fil-manṭiq* a thesis in logic.

مباحث *mabaaḥis* /pl n/ police investigation department. *ʔil-mabaaḥis il-ɛamma* Central Criminal Investigation Department. *mabaaḥis ʔamn id-dawla* Bureau of Investigation for National Security. *mabaaḥis it-tamwiin* enforcement arm of the Ministry of Supply.

اتبحث *ʔitbaḥas* /vi/ to be investigated, be examined, be studied. - iva *mitbiḥis*.

باحث *baaḥis*[2] /vt/ to hold a discussion with (s.o.). - vn *mubaḥsa*; ava *mibaaḥis, mubaaḥis*↑.

اتباحث *ʔitbaaḥis* /vi/ **1** to discuss together. **2** to be involved in discussion. - ava/iva *mitbaaḥis*.

ب ح ل ق
بحلق *baḥlaq* /vi/ to stare, be goggle-eyed. *waqfiin tibaḥlaqu leeh* why are you standing staring? *miʃ qaadir ʃanaam wi-ɛenay-ya mbaḥlaqa* I can't sleep and my eyes are wide open. ‖ *ʃakl[i] w-baḥlaqa* ≈ looking a gift-horse in the mouth. - vn ***baḥlaq***a; ava *mibaḥlaq*.

ب خ ا ر
بخارا *buxaara* /prop n/ Bukhara.
البخارى *ʃil-buxaari* /prop n/ el-Bukhari, ninth-century compiler of a canonical assemblage of Prophetic traditions. ‖ *huwwa-ḫna xliṭna fil-buxaari* ≈ was it such a heinous mistake we made?

ب خ ب خ
بخبخ *baxbax* 1 /vt/ to sprinkle. 2 /vi/ to develop air-pockets (of cement or metals). - vn *baxbax*a; ava *mibaxbax*.
اتبخبخ *ʃitbaxbax* /vi/ to be sprinkled. - iva *mitbaxbax*.

ب خ ت
بخت *baxt* /n pl *ʃabxaat, buxuut*/ 1 fortune, lot. *yimkin il-bint[i] di tkuun min baxt-i* perhaps it will be my lot to marry this girl. *ʃil-baxt[a] ɛand allaah* one's fortune depends on God. *ʃinta w-baxt-ak* it depends on your luck. *ʃil-baxt[i] kaan ʃiswid* it was rotten luck. 2 good luck, good fortune. *ya baxt-u* how lucky he is! *baxt-ak ya ʃabu bxiit* (1) try your luck. (2) lucky dip. *qaliil il-baxt[i] ylaaqi l-ɛaḍm[i] fil-kirfa [prov]* an unlucky man will find bones (even) in tripe. *qiraaṭ baxt[i] wala faddaan faṭaara [prov]* ≈ an ounce of good luck is better than a pound of cleverness. 3 /also pl *buxúta*/ surprise package.
بخيت *bixiit* /prop n/ male given name. ‖ *baxt-ak ya ʃabu bxiit* (1) try your luck! (2) lucky dip.
مبخت *mibxit* /adj */ possessed of a lucky touch.
مبخّت *mibaxxat* /adj */ = *mibxit*.

ب خ ت ر
اتبختر *ʃitbaxtar* /vi/ to strut, swagger. - also *ʃitmaxtar*. - ava *mitbaxtar*.

ب خ خ [1]
بخ *baxx (u)* /vt/ 1 to spray (s.th.) with a liquid. *ḫa-ngiib ḫadd[i] ybuxx iʃ-faqqa ɛafaan nixlaṣ min iṣ-ṣaraṣiir* we'll get someone to spray the flat to get rid of the cockroaches. 2 to atomize, spray (a liquid). *baxxit mayya ɛala l-qamiiṣ qabl[i] ma yitkiwi* she sprayed the shirt with water before it was ironed. ‖ *ʃid-dinya baxxit baxxa waḥda w-baṭṭalit* there was just a quick shower and then the rain stopped. - vn *baxx, baxaxaan*; ava *baaxix*; pva *mabxuux*.
بخّة *baxxa* /pl *-aat*/ instance noun of *baxx*. ‖ *baxxit ɛafariit* a demon of a child.
بخّاخة *baxxaaxa* /n pl *-aat*/ any device whose purpose is to spray liquids (e.g., atomizer).
بخيخة *buxxeexa* /n pl *baxaxiix*/ = *baxxaaxa*.
اتبخّ *ʃitbaxx* /vi/ to be sprayed. - iva *mitbaxx*.
انبخّ *ʃinbaxx* = *ʃitbaxx*. - iva *minbaxx*.

ب خ خ [2]
بخ *bixx* <Copt> interjection used to startle someone ≈ boo!

ب خ ر [1]
بخار *buxaar* /n/ 1 steam, water vapour. *mumkin tiṭṭibix ɛal-buxaar* it can be cooked over steam. ‖ *ḫallit buxaar* pressure cooker. 2 /pl *ʃabxira*/ vapour. *ɣazaat wi-ʃabxira saamma* poisonous gases and vapours.
بخارى *buxaari* /adj/ steam-driven. *ʃalaat buxariyya* steam-driven equipment.
بخور *buxuur* /n/ incense. *rafɛ[i] buxuur [Chr]* raising of incense, offering of incense.
أبخر *ʃabxar* /adj, fem *baxra*, pl *buxr*/ exhaling malodorous breath. *ʃiḫtar[i] ya baxra ʃabuus-ik mineen [prov]* (I don't know where to kiss you because of the smell of your mouth) I am at a loss to know how to please you.
مبخرة *mabxara* /n pl *mabaaxir*/ 1 fumigator. 2 censer, thurible.
باخرة *baxra, baaxira* /n pl *bawaaxir*/ steamer, steamship.
بخّر *baxxar* /vt/ 1 to evaporate. 2 to fumigate. 3 to cense. — /vi/ 4 to engage in flattery. *ʃit-tabxiir lil-mudiir* flattering the director. 5 to respire (of plants). - vn *tabxiir*; ava/pva *mibaxxar*.
تبخيرة *tabxiira* /n/ 1 /pl *-aat*/ instance noun of *tabxiir*. 2 /no pl/ branch of folk medicine involving the use of incense.
مبخّراتى *mibaxxaraati* /n pl *-yya*/ 1 one who censes or fumigates shops and streets. 2 flatterer.
اتبخّر *ʃitbaxxar* /vi/ 1 to evaporate or be evaporated. 2 to be fumigated. 3 to be censed. 4 to be or become diffused or dispersed. - vn *tabaxxur*↑; ava/iva *mitbaxxar*.

ب خ ر [2] see ب خ ا ر: *buxaara, ʃil-buxaari*

ب خ س
بخس *baxas (i)* /vt/ to cause a setback to. *rabb-i-na*

baxas-u God upset his plans. - vn *baxasaan, baxsa*; ava *baaxis*; pva *mabxuus*.
بخس *baxs* /adj invar/ very low (of prices).
اتبخس *ʔitbaxas* /vi/ **1** to be caused a setback. **2** to be under-priced or under-valued. - iva *mitbixis*.

ب خ ش ش
مبخشش *mibaxʃiʃ* /adj/ perforated. *bi-titɛimil in-namaazig di b-waraq marsuum wi-mbaxʃiʃ* these designs are made with paper, drawn upon and perforated (for transference to cloth used in tent making).

ب خ ش و ن
بخشونجی *baxʃawangi* <T *bahçıvan*> *[obsol]* /n pl *-yya*/ gardener.

ب خ ل
بخل *bixil (a)* /vi/ to stint, become stingy or miserly. *ma-tibxal-ʃ*^{i} *ɛaleena b-ziyart-ak* ≈ visit us more often! - vn *buxl*.
بخيل *baxiil* /adj pl *buxala*/ miserly.
أبخل *ʔabxal* /el/ more/most miserly.
استبخل *ʔistabxal* /vt/ to consider miserly. - vn *ʔistibxaal*; ava/pva *mistabxal*.

ب خ ن ق
بخنق *buxnuq* /n pl *baxaaniq*/ throat latch (of a bridle).

ب د ء see ب د ى [1]: *badaʔ, badʔ, bidaaʔi, mabdaʔ, ʔibtadaʔ, ʔibtidaaʔi, mubtadiʔ*

ب د ح see ب د و ح: *baduuh*

ب د د [1]
بدّ *budd: la budd* it is absolutely necessary, as in *kaan la budd (min) inn*^{i} *kull-u-hum yiruuhu* all of them simply had to go. *la budd*^{i} *min taḥdiid il-mas ʔuliyya* it must be determined who is responsible (for what went wrong), *ʔilli minnu la budd*^{a} *ɛannu [prov]* ≈ what must be must be. *miʃ wala budd* not so good, only so-so, as in *zooq-u miʃ wala budd* his taste is so-so. *ma-fii-ʃ ɛannu* (or *minnu) budd* it is a must.
أبدّ *ʔabadd* /adj invar/ callous, insensitive.
بدّد *baddid* /vt/ to waste, squander, fritter away. *bi-ybaddid ḥayaat-u* he's wasting his life. - vn *tabdiid*; ava/pva *mibaddid*.
تبديد *tabdiid* /n/ *[leg]* violation of trust.
اتبدّد *ʔitbaddid* /vi/ to be wasted, be squandered, be frittered away. - iva *mitbaddid*.
استبدّ *ʔistabadd* /vi/ to act tyrannically. *bi-tistabidd*^{i} *bin-naas kida leeh* why do you treat people so arbitrarily? - vn *ʔistibdaad*; ava *mustabidd*.
استبدادى *ʔistibdaadi* /adj */ dictatorial.

ب د د [2] see و د د: *bidd-*

ب د ر [1]
بدر *badr* /n pl *buduur*/ **1** full moon. ‖*ka-ʔinnina ya badr*^{i} *la ruḥna wala giina* ≈ as if we had done nothing, for all the effect our effort had. **2** /pl also *budúra*/ epithet for a good-looking youth or girl. ‖*badr*^{i} *bduur* ≈ a ravishing girl.

ب د ر [2]
بدر *badar*^{i} *(u)* /vi/ to come unexpectedly, come by surprise. *huwwa - la samaḥ allaah - badar minni kilma zaɛɛalit-u* I inadvertently said something that upset him.
بدرى *badri* /adv/ early. *lissa badri ɛala gawaz-ha* it's still too soon for her to get married. ‖*zarɛ*^{i} *badri [deris]* well-built person.
¶ *min badri* /adv/ (1) some time ago. *xarag min badri* he left a good while ago. (2) for a considerable time. *ʔana mistannii-k min badri* I've been waiting for you for quite a while. (3) a considerable time in advance. *bi-yxaṭṭaṭ lil-maʃruuɛ min badri* he makes plans for the project well in advance.
بدريّة *badriyya* /n pl *badaara*/ **1** pullet. **2** /pl also *-aat*/ young ewe. — /no pl/ **3** early morning. *ʔil-badriyya saaɛa haniyya* the small hours of the morning is a lovely time.
بدارى *badaari: zarɛ il-badaari* the earliest planting of any crop.
أبدر *ʔabdar* /el/ earlier/earliest. *laazim tiigi ʔabdar min kida* you must come earlier than that.
بدّر *baddar*^{i} **1** /vi/ to make an early start. *xallii-na nbaddar fiʃ-ʃuɣl* let's start early with the work. **2** /vt/ to appoint an earlier time for (s.o.). *huwwa ɛaayiz yibaddar-ni fil-maɛaad* he wants to give me an earlier appointment. - vn *tabdiir*; ava/pva *mibaddar*.
بادر *baadir*^{i} **1** /vt/ to be ahead of (s.o., in doing s.th.). *kunna zaɛlaniin maɛa baɛḍ*^{i} *laakin lamma ʃuft-u huwwa lli badir-ni b-taḥiyya* we were angry with one another, but when we met he was the first to get in a greeting. **2** /vi/ to hasten. *baadir bi-tasliim il-mablaɣ* he hastened to hand over the amount. - vn *mubadra*; ava *mubaadir*.
مبادرة *mubadra* /n pl *-aat/ [pol]* initiative.

استبدر ʃistabdar /vt/ **1** to ask or cause to be earlier. *ruuḥ istabdar-hum* go and hurry them up! **2** to consider (too) early. — /vi/ **3** to make an early start. -vn *ʃistibdaar*; ava/pva *mistabdar*.

ب د ر [3]

بدر، بِذر *badar[2] (u)* /vt/ to scatter, broadcast, strew. *bi-nubdur il-kimaawi fil-ʃarḍ* we spread the chemical fertilizer over the ground. *baɛd[i] ball-a-ha b-nubdur it-taqaawi* after it (i.e. the land) has been moistened we broadcast the seed. -vn *badr, bidaar*; ava *baadir, baadir*; pva *mabduur, mabduur*.

بذر *bizr* /coll n/ seed(s), pip(s), stone(s). *ɛinab min ɣeer bizr* seedless grapes. ‖*ɣurzit il-bizr [needlew]* type of knot-stitch.

بذرة *bizra* /n pl *-aat*/ **1** /unit/ a seed, a pip, a stone. *bizrit miʃmiʃ* an apricot stone. *bizrit xarruub* a carob seed. **2** /coll/ seed(s), pip(s), stone(s). *quṭn[i] xaali min il-bizra* cotton with its seeds removed.

بذراية *bizraaya* = *bizra*.

بذور *buzuurˆ* /pl n/ seed(s).

بديرى *bideeri[1]* /adj invar/ mottled whitish-red colour (of pigeons).

بذّارة، بذارة *baddaara[1]* /n pl *-aat*/ device used for sowing.

بذّارى *baddaari, baddaari* /n/ method of planting rice by which the mature crop is cultivated directly from seed without an intervening stage of transplant.

اتبدر، اتبذر ʃitbadar /vi/ to be scattered, be broadcast. -iva *mitbidir*.

ب د ر [4]

بودرة *budra* <Fr *poudre*> /n pl *-aat*/ powder. *budrit talk* talcum powder. *budrit liḥaam* welding flux. *budrit ḥaʃiiʃ* powdered hashish. *sukkar budra* icing sugar. ‖*budrit il-ɛafriit* (1) itching powder: (2) tree of the genus Sterculia, the fruit of which contains hairs causing itching.

بذّارة *baddaara[2]* /n pl *-aat*/ powder dispenser.

بذّر *baddar[2]* /vt/ to powder, dust with powder. -vn *tabdiir*; ava *mibaddar*.

اتبذّر ʃitbaddar /vi/ to be powdered, be dusted with powder. -iva *mitbaddar*.

ب د ر ا ن

بدران *badraan: giziirit badraan* area in north Cairo.

ب د ر ج

بدرجه *badarga: ḥadarga badarga* the opening phrase of a children's counting game.

ب د ر و م see ب د ر و ن: *badroom*

ب د ر و ن

بدرون *badroon* (also *badroom*) <T *bodrum*> /n pl *-aat*/ basement, cellar.

ب د ع

بدع *badaɛ (a)* /vt/ to create, originate, invent. *ʃil-ḥamaam huwwa-lli badaɛ il-ḥubb* it's pigeons that invented love. -vn *badɛ*; ava *baadiɛ*.

بدع *bidɛ* /n/ *[women]* sauciness, brashness.

بدعة *bidɛa* /n pl *bidaɛ*/ **1a** innovation. **1b** creation (in art, fashion etc.). **2a** impropriety, scandalous behaviour. **2b** eccentricity, unconventional behaviour. **3** heresy.

بديع *badiiɛ* **1** /adj/ marvellous, wonderful. *fikra badiiɛa* a brilliant idea. **2**ˆ /n/ *(ɛilm) il-badiiɛ* literary ornamentation (one of the three branches of the study of Arabic rhetoric). **3** *ʃil-badiiɛ* Supreme Creator (epithet of God).

بديعة *badiiɛa* /prop n/ female given name. ‖*samak badiiɛa* angel fish. -*kubri badiiɛa [obsol]* bridge over the Nile at Cairo (later called *kubriˆ-galaaʃ*) joining the west bank and the southern end of Guezira Island, named after the dancer, Badi'a Masabni.

أبدع *ʃabdaɛ[1]* /el/ more/most wonderful.

اتبدع ʃitbadaɛ /vi/ to be created, be originated, be invented. *ʃil-ḥubb itbadaɛ fi-balad-na* love was invented in our country. -iva *mitbidiɛ*.

بدّع baddaɛ /vi/ to do wonders, perform marvels. *ʃiz-zamaalik baddaɛ bi-ṣaḥiiḥ in-nahar-da* Zamalik (football team) was really great today. -ava *mibaddaɛ*.

أبدع *ʃabdaɛ[2]* /vi/ to excel, give a wonderful performance. *ʃinta ʃabdaɛt[i] fil-matʃ* you played a great match. -vn *ʃibdaaɛ*; ava *mubdiɛ*.

إبداع *ʃibdaaɛ* /n/ excellence.

ابتدع *ʃibtadaɛ* /vt/ to invent. -vn *ʃibtidaaɛ*; ava *mibtidiɛ*.

ب د ق

بودقة *budqa* /n pl *bawaadiq*/ crucible, melting-pot. -also *butqa*.

ب د ك ى ر

بدكير *badikiir* or *bidikiir* <Fr> /n/ pedicure.

ب د ل [1]

بدل *badal[1] (i)* /vt/ to substitute. *xallaa-ni miʃ baaṣiṣ wi-badal il-ɣiweeʃa* he distracted my attention and

switched the bracelet. -vn *badal*; ava *baadil*; pva *mabduul*.

بدل *badal*[2] /n pl *-aat/* **1** substitute, replacement. *laazim tistanna l-badal ʕabl*[i] *ma-tʕuum bil-ʃagaaza* you must wait for the substitute (worker) before you go on holiday. *badal faaʕid* replacement for something lost. **2** exchange, swop. *kull*[i] *waaḥid bi-yiftiri ktaab wi-baʕd*[i] *ʃahr*[i] *yiʕmilu badal* each of them buys a book and after a month they arrange a swop. **3** allowance. *badal tamsiil* expense account. *badal sahar* extra payment for night work. *badal ṭabiiʕit ʕamal* hardship allowance.

بدل *badal*[3] (also *bidaal*) /prep/ instead of. *bi-yibʕat wakiil maktab-u badalu* he sends his office agent in his place.

¶ *badal-ma, bidaal ma* /conj/ instead of. *badal ma yinbisiṭ baʕa middaayiʕ xaaliṣ* instead of being pleased he became extremely irritated.

بدليّة *badaliyya* /n pl *-aat/ [obsol]* money paid for exemption from military service, purchase money.

مبدول *mabduul* /n */ child believed to have been substituted by the jinn for another, changeling. ‖ *ʃil-wad-da zayy il-mabduul* that boy is very irritable.

بدال *bidaal* **1** /conj/ since, as long as. *bidaal ʃinta mʃiit fis-sikka l-wiḥʃa di ʾyibʕa miʃ ḥa-tinfaʕ* since you've taken to living a bad life, you won't be good for anything. **2** /prep/ = *badal*[3].

بديل *badiil* /pl *badaayil/* **1** /n/ substitute, alternative. **2** /adj/ substitute, alternative.

بدّالة *baddaala* /n pl *-aat/ [agric]* **1** Archimedes' screw (see Pl. E, 15). **2** irrigation device consisting of a wooden box which is tipped back and forth.

اتبدل *ʃitbadal* /vi/ **1** to be substituted. **2a** to be possessed by a jinni. **2b** to become annoyed or upset. *saaʕit ma ʃaaf il-fatuura tbadal wala baʕaa-ʃ ḥadd*[i] *ʕaarif yikallim-u* as soon as he saw the bill he became very cross and nobody could speak to him. -ava/iva *mitbidil*.

انبدل *ʃinbadal* = *ʃitbadal*. -ava/iva *minbidil*.

بدّل *baddil*[1] /vt/ to change, change around. *ʕayz-ak tibaddil il-ʕagala* I want you to change the wheel. *ʃil-waad bi-ybaddil (sinaan-u)* the boy is losing his milk teeth. *baddil id-dustuur* he changed the constitution. -vn *tabdiil*; ava/pva *mibaddil*.

اتبدّل *ʃitbaddil* /vi/ **1** to change, become different. *min yoom ma rigiʕ wi-ḥaal-u tbaddil* he's been different ever since he got back. **2** to be replaced (by a substitute). *ʃiʃ-ʃanṭa laazim itbaddilit fil-ʕaṭr* the case must have been changed for another in the train. *ʃil-ḥukm*[i] *bil-ʃiʕdaam itbaddil bil-muʃabbad* the death sentence was commuted to life imprisonment. -ava/iva *mitbaddil*.

بادل *baadil* /vt/ to exchange with (s.o.). *tibadil-ni* do you want to swop with me? *bi-titʕimil bil-muʕayḍa ʃaw bil-mubadla* it is done by means of bartering or exchange. -vn *mibadla, mubadla*[↑]; ava/pva *mibaadil*.

اتبادل *ʃitbaadil* /vt/ to exchange with one another. *baʕd il-ʕaʃa b-yitbadlu n-nukat il-laṭiifa* after supper they exchange amusing jokes. -vn *tabaadul*; ava *mitbaadil*.

استبدل *ʃistabdil* /vt/ **1** to make a substitute for. *ḥ-astabdil-lak ḥaʕʕ-ak bi-hdiyya* instead of paying you what I owe I'll give you a present. **2** to take out (a loan) with one's pension as security. *ʃistabdil xamsa gneeh min il-maʕaaf ʕala ʕaʃar siniin* he got an advance against five pounds of his pension to be paid back over ten years. -vn *ʃistibdaal*; ava/pva *mistabdil*.

استبدال *ʃistibdaal* /n pl *-aat/* loan made to an employee or pensioner with his pension as security.

ب د ل [2]

بدّال *baddaal* <Fr *pédale*> /n pl *-aat/* pedal. *ma-tdus-ʃ*[i] *ʕal-baddaal* don't step on the pedal! *markib baddaal* paddle-boat, paddle-ship.

بدّل *baddil*[2] /vi/ to pedal. *b-abaddil bi-rigl*[i] *waḥda* I pedal with one leg. -vn *tabdiil*; ava *mibaddil*.

ب د ل [3]

بدلة، بذلة *badla* /n pl *bidal, -aat/* **1** (man's) suit, (woman's) trouser-suit. *badlit xaṭs* diving-suit. **2** uniform. *badla ʕaskariyya* military uniform. **3** belly-dancer's costume.

ب د ل ى

بدليو *bidalyu* <It *bardiglio*> /n/ type of grey marble.

ب د ن

بدن *badan* /n pl *ʃabdaan/* **1** body, torso (of a human). *ṣiḥḥit il-ʃabdaan wala ṣiḥḥit il-ʃaḍyaan [prov]* (health of bodies rather than health of religions) ≈ a sound body produces a sound mind. -/pl used for emphasis/ *haru ʃabdaan-i* they gave me a thorough beating. ‖ *ṣaḥḥ allaahu badan-ak* conventional reply to *ṣaḥḥ in-noom*. -*baab il-badan* anus. -*tisimmi badan-ha bil-kilmiteen dool* ≈ you make her feel hurt by those words. **2** basic part onto which other parts are built, e.g., body of a wind instrument, tank of a primus stove, hull or prow of a boat, front and back sections of a galabiya or dress. **3** uterus.

بدنى *badani* /adj */ bodily, physical. *riyaaḍa badaniyya* physical training.

ب د ن ج -
باذنجان *bidingaan* (also *bitingaan, biringaan*↓) <P *bâdinjân*> /coll n/ eggplant(s), aubergine(s). ‖ *ʕaadi zamaan il-bidingaan* it's the silly season, it's the season for madness.
باذنجانة *bidingaana* (also *bitingaana)* /unit n, pl *-aat*/ an egg-plant, an aubergine.
باذنجانى *bidingaani* (also *bitingaani*) /adj invar/ dark purple.

ب د ه
بديهة *badiiha* /n/ insight, perspicacity. *badiht-u ḥaḍra*, he is quick-witted. ‖*ɛala l-badiiha* spontaneously.

ب د و ¹
بدوى *badawi* 1 /n pl *badw*/ bedouin, nomad. 2 /adj */ pertaining to the bedouin.
البدوى *ʔil-badawi* /prop n/ Sidi Ahmad el-Badawi (popularly known as es-Sayyid el-Badawi), famous Muslim saint buried in Tanta.

ب د و ² see ب د ى ²

ب د و ح
بدوح *baduuḥ [magic, obsol]* abecedarian compound word, sometimes represented by its value number 2468, and used as a lucky charm.

ب د ى ¹
بدا، بدأ *bada¹, badaʔ¹↑ (a)* /vi/ 1 to make a start, begin. *bi-tibdaʔ bi-ḥarf il-ʔalif* it begins with the letter *ʔalif*. 2 /preverb/ to begin to. *ʔil-mumassiliin badu yiẓharu ɛal-masraḥ* the actors began to appear on the stage. - vn *badʔ, bidaaya*; ava *baadi, baadiʔ↑*.
بدا، بدأ *bada² (i), badaʔ²↑ (a)* /vt/ to begin or start (s.th.). *ḥa-yibdi l-ḥafla b-ʔuɣniyya* he'll begin the performance with a song. *ʔawwil ma nibdi l-ɋool niṣalli ɛalá n-nabi* when we begin the tale we bless the Prophet (opening phrase of popular stories). - vn *badʔ↑, bady*; ava *baadi, baadiʔ↑*; pva *mabdi, mabduuʔ↑*.
بدء *badʔ* /n/ *[athl]* start. *badʔa ɋaali* standing start.
بدية *badya* /fem n, pl *-aat, bidáy*/ 1 casting-on point (in knitting etc.). *law ʔaddeet fatlit il-badya ḥa-yitḥall¹ kull-u* if you pull the cast-on stitch undone, it will all unravel. 2 frame, skeleton, foundation.
بداية *bidaaya* /n/ beginning, start. *min il-bidaaya* from the beginning. *xaṭṭ il-bidaaya [athl]* starting line.
بدائى *bidaaʔi, budaaʔi* /adj */ primitive. *fann¹ bdaaʔi* primitive art. *xallaṣu ɛaleehum bi-ṭariiɋa budaʔiyya* they finished them off in a savage manner.
أبدأ *ʔabda¹* /el/ having priority, taking precedence. *huwwa ʔabda min gooz-ik* he takes precedence over your husband.
مبدأ *mabdaʔ* /n pl *mabaadiʔ*/ 1 principle, conviction. *min ḫees il-mabdaʔ* on principle. *raagil ma-ɛanduu-ʃ mabdaʔ* an unprincipled man. 2 beginning, starting point. *min mabdaʔ il-ʔamr* right from the start, as in *ʔana ɋult¹ min mabdaʔ il-ʔamr¹ laazim nidfaɛ illi ɛaleena* I said from the very beginning that we should pay what we owe.
¶ *mabdaʔiyyan* /adv/ (1) in principle. (2) originally, in the first place.
مبادأة *mubadʔa* /n pl *-aat*/ initiative, initiatory action.
ابتدى، اتبدأ *ʔitbada, ʔitbadaʔ* /vi/ to be started, be begun. -iva *mitbidi*.
بدّى *badda* /vt/ to give priority to. *ɛumr-u ma-badda ʔaṣḥaab-u ɛala ɋarayb-u* he never puts his friends before his relatives. - vn *tabdiyya*; ava/pva *mibaddi*.
اتبدّى *ʔitbadda* /vi/ to be given priority. - iva *mitbaddi*.
ابتدا *ʔibtada* 1 /vt/ to begin, start, *bi-nibtidi l-ɛamal biṭ-ṭariiɋa di* we begin the work this way. — /vi/ 2 to make a start, begin. *ʔil-imtiḥanaat ibtadit ʔimbaariḥ* the examinations began yesterday. 3 /preverb/ to begin to. *ʔiʃ-ʃams ibtadit tisayyaḥ il-ʔasfalt* the sun began to melt the asphalt. - vn *ʔibtidaaʔ↑*; ava *mibtidi, mubtadiʔ↑, mubtadiʔ↑*.
ابتدائى *ʔibtidaaʔi* /adj */ 1 initial, primary. *madrasa btidaʔiyya* a primary school. *maḥaakim ibtidaʔiyya* courts of first instance. *surɛa btidaʔiyya [auto]* low gear. 2 pertaining to primary school. *ʔana f-ʔuula btidaaʔi* or *ʔana fiṣ-ṣaff il-ʔawwil l-ibtidaaʔi* I am in the first grade of primary school.
الابتدائيّة *ʔil-ʔibtidaʔiyya* /n/ the primary school certificate. *huwwa fil-ibtidaʔiyya* he's working for his primary school certificate.
مبتدئ، مبتدى *mubtadi, mubtadiʔ* /n */ 1 beginner. 2 *[Chr]* novice.
استبدى *ʔistabda*↓ /vi/ to make a start, begin. *ʔistabdi bil-ɋumṣaan wi-xalli ʃ-ʃarabaat lil-ʔaaxir* start with the shirts and leave the socks till last. - ava *mistabdi*.

ب د ى ²
بدا *bada-³↑ (yabdu)* /vi/ 1 it seems, it appears. *yabdu ʔinnu maʃɣuul* it seems he's busy. 2 to appear. *bada ɛalee ʔit-taɛab* the tiredness showed on him, he looked tired. ‖ *ʔiɛmil ma badaa-lak* do whatever you like.
أبدى *ʔabda²↑* /vt/ to show. *ʔabda ʔixlaaṣ-u* he showed his sincerity. *ʔabdeet raʔy-i* I expressed my opinion. *bi-duun ʔibdaaʔ il-ʔasbaab* without explaining the reasons. - vn *ʔibdaaʔ*; ava *mibdi, mubdi*.

ب د ی ه
بديه *bideeh* <Fr> /n pl *-aat*/ bidet.

ب ذ ر see ب د ر ³

ب ذ ل ¹ see ب د ل ³

ب ذ ل ² see ب ز ل ²

ب ذ ن ج – see ب د ن ج –

ب ر ا ف
برافو *biraafu, biraavu*↑ (also *baraawu*) <It> /interj/ bravo. *biraafu ɛaleek* well done! good for you!

ب ر ا ن see ب و ر ¹: *buraani*

ب ر ا و see ب ر ا ف: *baraawu*

ب ر ء ¹
برا *bara*¹ *(i)* /vt/ to exonerate, grant immunity to. *ɋal-laha brii-ni w-ʕana ʕaṭallaɋ-ik* he said to her, 'If you absolve me (from the sinfulness of it) I'll give you a divorce'. ‖ *bareet zimmit-i min allaah* I did what was right in the eyes of God. - pva *mabri*.
بري *bari*↓ /adj pl *ʕabriya, ʕabriyya*/ innocent. *ya baxt il-maẓluum wi-huwwa bari [prov]* lucky the man who is wrongly accused (because he will be compensated for his sufferings in the next life) (said by one who claims he is falsely accused).
براءة *baraaʕa* /n/ *[leg]* innocence. *ḫakámit il-maḫkama b-baraaʕit il-muttaham* the court declared the defendant not guilty.
بريء *bariiʔ* /adj pl *ʕabriyaaʕ*/ innocent, acquitted. *fil-ʕaaxir ṭilɛ bariiʔ* he turned out to be innocent after all. ‖ *ʕana bariiʔ minnak* I've washed my hands of you completely. - *ʕakuun bariiʔ ɛan diin il-ʕislaam* I would be outside Islam, i.e. no longer a Muslim, (if ...).
إبراء *ʕibraaʕ: sanat il-ʕibraaʕ* Sabbatical year (in Judaism).
برّأ *barraʕ* /vt/ to acquit, declare innocent. *ʕil-maḫkama barraʕit-u ɛafaan ma-fii-ʃ ʕadilla kfaaya* the court acquitted him because of lack of sufficient evidence. - vn *tabriʕa*↑; ava/pva *mibarraʕ*.
اتبرّأ *ʕitbarraʕ* /vi/ to be found not guilty. - iva *mitbarraʕ*.
اتبرّى *ʕitbarra, ʕitbarra* /vi/ to disown responsibility. *ʕabuu-ha tbarra minha* her father washed his hands of her. - ava *mitbarri*.
استبرى *ʕistabra, ʕistabra: bareet-ak wi-stabreet-ak [women]* I absolve you completely.
استبرّا *ʕistibarra*↓ /vt/ intensive of *ʕitbarra*. ‖ *ʕana stibarreet mil-ɛiyaal di* I've had as much as I can stand from these kids! - ava *mistibarri*.

ب ر ء ²
باري *baari* /n/ Creator (epithet of God).
البريّة *ʕil-bariyya* /n/ Creation, the created universe.

ب ر ب
بربة *birba* <Copt> /n pl *baraabi, ʕibriba*/ **1** ancient or ruined temple. **2**↓ tomb.

ب ر ب خ
بربخ *barbax, barbax* /n pl *baraabix, baraabix*/ culvert, any of various types of large metal or earthenware pipes (used, e.g., for drains, sewers, irrigation).

ب ر ب ر ¹
بربري *barbari* /n pl *barabra*/ **1** *[deris, obsol]* black African (not used in direct address). **2** hot-tempered person. ‖ *barabra ya rasuul allaah* expression of apology to a third party for someone with a hot temper. – /no pl/ **3** gibberish. *bi-yitkallim barbari* he's talking double-Dutch.

ب ر ب ر ²
بربور *barbuur* /n pl *barabiir*/ nasal mucus, snot.
بربر *barbar* /vi/ **1** to have a running nose. **2** to snivel. - vn *barbara*; ava *mibarbar*.
مبربر *mibarbar* /adj/ snotty-nosed, snot-covered.

ب ر ب ر ³
بربر *birbir* <Copt> /adj invar/ young (of a chicken). ‖ *ʕinta lissa birbir* ≈ you're still wet behind the ears.
بربرة *birbira* /n pl *baraabir*/ pullet. ‖ *diik il-baraabir* the only brother of a number of sisters.

ب ر ب ر –
بربريز *barabriiz* <Fr *pare-brise*> /n pl *-aat*/ **1** windscreen, wind-shield (of a car etc.). **2** back window (of a car etc.).

ب ر ب ش
بربش *barbiʃ* /vt/ **1** to blink (the eyelids) constantly (as a nervous habit). **2** to narrow (the eyes). *bi-ynaam wi-ɛenee mbarbiʃa* he sleeps with his eyelids slightly open. - vn *barbaʃa*; ava *mibarbiʃ*.

ب ر ب ق
بربق *barbaq* **1** /vt/ to plaster (a wall), plaster over (holes in a wall). **2** /vi/ **2a** to stare, open the eyes wide. **2b** to gleam, twinkle (of the eyes). - vn *barbaqa*; ava/pva *mibarbaq*.
اتبربق *ʔitbarbaq* /vi/ to be plastered, be plastered over. - iva *mitbarbaq*.

ب ر ب ن د
برابند *baraband* <poss P *bârbad*> /n pl *-aat*/ one who speaks very fast and fluently, chatter-box. *huwwa baraband*^{i} *fil-ʔingiliizi* or *bi-yitkallim ʔingiliizi zayy il-baraband* he speaks English fluently.

ب ر ب و ن
بربوني *barbooni* /coll n/ red mullet (Mullus barbatus, and other similar varieties).
بربونايّة *barbonaaya* /unit n, pl *-aat*/ a red mullet.

ب ر ت ت -
برتتورة *bartituura* <It *partitura*> /n pl *-aat*/ *[mus]* score.

ب ر ت ر ي
برتريه *burtreeh* <Fr> /n pl *-aat*/ portrait.

ب ر ت س
برتستو *burutustu* <It *protesto*> /n pl *burutustaat*/ *[comm, obsol]* protest.
برتس *bartas* /vi/ *[comm, obsol]* to serve or execute a protest. - vn *bartasa*; ava *mibartas*.

ب ر ت س -
بروتستانتي *burutistanti* <Engl> /adj pl *burutistant*/ *[Chr]* Protestant. - also *burustanti*.

ب ر ت غ -
برتغال *burtuɣaal* /prop n/ Portugal.
برتغالي *burtuɣaali* **1** /adj */ Portuguese. **2** /n */ a Portuguese. **3** /n, no pl/ the Portuguese language.

ب ر ت ق -
برتقان *burtuqaan, burtuqaan* /coll n/ oranges. *burtuqaan ʔabu surra* navel oranges. *burtuqaan baladi* small sharp variety of orange. *burtuqaan sukkari* sweet, bland variety of orange. *burtuqaan ʂeefi* variety of orange that is harvested (unlike other varieties) in the summer. *burtuqaan bi-damm-u* blood orange. ‖*burtuqaan bamya* carambola.
برتقانة *burtuqaana, burtuqaana* /unit n, pl *-aat, -aat*/ an orange.
برتقاني *burtuqaani, burtuqaani* /adj invar/ orange in colour.

ب ر ت ك -
بروتوكول *burutukuul* <Fr> /n pl *-aat*/ **1** protocol. **2** regulations, rules (of a school, club, place of business).

ب ر ت و ن
برتون *biritoon* <prob Fr *péritoine*> /n/ *[anat]* peritoneum. *ʔiltihaab fil-biritoon* peritonitis.

ب ر ت ي
بارتيه *barteeh* <Fr *partez*> /interj/ *[cin]* action!

ب ر ت ي ت
برتيتة *bartiita* <It *partita*> /n/ **1** gambling party. **2** illicit gathering.

ب ر ت ي ن
بروتين *burutiin* <Engl> /n pl *-aat*/ protein.

ب ر ت ي -
برتيفود *baratayfuud* <prob Engl> /n/ paratyphoid.

ب ر ج [1]
برج *burg* /n pl *ʔabraag, buruug, biraag*/ **1** tower. *burg*^{i} *ħamaam* dove-cote, pigeon-house (see Pl.C, 3). *burg il-qaahira* Cairo Tower, on Guezira Island. *burg il-ħafr* oil rig. *ʕaayiʃ fi-burg*^{i} *ʕaagi* living in an ivory tower. ‖*burg*^{i} *min ʕaql-u ʃaar* he lost his head. - *ħa-tṭayyar burg*^{i} (or *burgeen*) *min ʕaql-i* you'll drive me out of my mind. **2** *[astrol]* zodiacal sign.
برّج *barrag* /vt/ to pile up. *bi-nbarrag-hum fooq baʕḍ*^{i} *waaħid waaħid* we stack them up on top of each other one by one. - vn *tabriig*; ava/pva *mibarrag*.
اتبرّج *ʔitbarrag* /vi/ to be piled up. - iva *mitbarrag*.

ب ر ج [2]
بارجة *baariga*^{ĥ} /n pl *bawaarig*/ battleship.

ب ر ج [3] see ب و ر ى [2] : *buruugi*

ب ر ج ر -
بروجرام *burugraam* <prob Fr> /n pl *-aat*/ programme, plan. *ʔeeh burugraam-ak in-nahar-da* what are your arrangements for today?

ب ر ج س

برجاس *birgaas* <P *burjâs*> /n/ *[obsol]* equestrian sport or entertainment (e.g., horse-dancing, mounted stick-fighting etc.).

برجس *bargis* /vi/ **1** *[obsol]* to engage in equestrian sports. ‖ *ʕaɛma wi-ybargis fin-naxl [prov]* (blind yet he gallops about amid the palms) ≈ he seeks to do what is far beyond his capacity. **2** to run about in a clumsy or dangerous way, barge about. -vn *bargasa*; ava *mibargis*.

[1] ب ر ج ل

برجل *bargil* /vt/ to confuse, put into disarray. *riglee mbargila* his legs are tangled up with each other. *ħaaga tbargil il-muxx* something which throws the brain into confusion. -vn *bargala*; ava/pva *mibargil*.

اتبرجل *ʔitbargil* /vi/ to be confused, be thrown into disarray. -iva *mitbargil*.

[2] (ب ر ج ل)

برجل *bargal* <T *pergel* from P> /n pl *baraagil*/ *[geom]* compass, pair of compasses. *bargal maqaṣṣ* combined calipers. *bargal baṭṭiixa* external calipers. *bargal fooka* divider (in metalwork).

برجلة *bírgula, bírjula, pírgula, pírjula* <prob It *pergola*> /n pl *-aat*/ summer-house.

ب ر ج ي ه

بروجيه *burujeeh* <Fr *projet*> /n/ draft. *ṣafħaat burujeeh* page proofs.

ب ر ج ل -

برجلاتك *birgalaatak ħirgalaatak birgalaatak ħalaqa dahab fi-wdanaat-ak* chant used in the ceremonies for a newborn child on *yoom is-subuuɛ*.

[1] ب ر ح

برح *baraħ (a)* /vi/ to take one's ease, act in a free and easy fashion. *baraħ fik-kalaam* (1) he waxed eloquent. (2) he talked too much. *ma-tibraħ-fʲ fiiha - xallii-k ɛala qadd-ak* ≈ don't run away with yourself; keep within your limits. -vn *baraaħ*; ava *baariħ*.

براح *baraaħ* **1** /n/ spaciousness, vastness. *ʔil-waaħid bi-yħissʲ bil-baraaħ fiṣ-ṣaħra* one gets a feeling of openness in the desert. ‖ *xad baraaħ-u* to behave freely, take one's ease, as in *xadtʲ baraaħ-i fif-fuxl* I settled down to the work contentedly and without interference, *xad baraaħ-u fif-faqqa* he did just as he liked in the flat. **2** /adj invar/ spacious, roomy. *faqqa baraaħ* a spacious flat. *xalli l-fustaan baraaħ min taħt il-wisṭ* make the dress full below the waist.

استبرح *ʔistabraħ* /vt/ to select for spaciousness. *humma baqa stabraħu faqqit-na ɛan faqqit-ku* they felt our flat to be roomier than yours. -vn *ʔistibraaħ*; ava *mistabraħ*.

[2] ب ر ج see ء م ب ا - : *ʔimbaariħ*

[1] ب ر د

برد *birid (a, a)* /vi/ **1** to become cold, cool off. *ħuṭṭ-u fit-tallaaga ɛaʃaan yibrad* put it in the refrigerator to cool. ‖ *ʔibrad ʃiwayya* (1) don't get so excited! (2) behave yourself! **2** to feel chilly, become chilled. *ʔana bridt - ħ-aruuħ ʔalbis baltu* I feel cold; I'll go and put on a coat. **3** to be soothed. *ħuṭṭ il-marham ɛal-garħʲ yibrad* put the ointment on the wound and it will be soothed. **4** to become a boor, behave insensitively or shamelessly. -vn *buruud, baradaan, baraada*; ava *baarid, bardaan*.

برود *buruud* /n/ **1** frigidity, reserve. *ɛamil-ni b-buruud* he treated me coldly. *ɛandaha buruud* she is frigid. *buruud il-ʔingiliiz* English sangfroid. **2** insensitivity, shamelessness.

برادة *baraada* /n/ shamelessness, insensitivity.

بارد *baarid* /adj/ **1** cool, cold (of inanimate things). *mayya barda* cold water. ‖ *ʔalwaan barda* (ceramic) colours that do not need firing. - *ʔin-nuqṭa l-barda* paralysis. - *ɛeen-i barda ɛala ... [women in trad soc]* may my eye not harm ... (prophylactic phrase used to ward off the evil that may be attracted inadvertently by admiration), as in *ya gamaal-u - ɛeen-i barda ɛalee* what a pretty (child) - may my eye not harm him! **2** mild (to the taste). *ṭumbaak baarid* mild tobacco. *filfil baarid mif ħaami* mild rather than hot pepper. **3a** insensitive. ‖ *damm-u baarid* he's stolid. **3b** unabashed, shameless. *ya baarid - ma-bi-tħissʲ-ʃ xaaliṣ* you boor! have you no feelings? **4a** uninspiring, flat. *nukta barda* a dull joke. *kalaam baarid* tedious talk. *faṣlʲ baarid* a rotten trick. **4b** dull, blunt. *sikkiina barda* a blunt knife.

بردان *bardaan* /adj */ cold (of persons).

برد *bard* /n/ **1** cold weather, coldness. *fi-ʔayyaam il-bardʲ bi-nxaṭṭii-ha* during the cold weather we cover it. *bi-yitriɛiʃ min il-bard* he's trembling from the cold. -/adjectivally/ *ʔid-dunya bard* it's cold. **2** cold, chill. *xad bard* he caught a cold. *lissa xaarig min door bard* I've just got over a bit of a cold.

أبرد *ʔabrad* /el/ colder/coldest, milder/mildest etc. ‖ *ʔabrad min mayyit ṭuuba [prov]* (colder than the water

in the month of Tuba) ≈ thoroughly unlikeable (a play on *baarid* 1 and 3).
برودة *buruuda* /n/ **1** coldness (of temperature). **2** frigidity.
برّاد *barraad*[1] /n pl *-aat, bararíid*/ **1** teapot. **2** kettle.
برّد *barrad* /vt/ **1** to cool, make cold. **2** to soothe. ‖*ħaaga tbarrad il-ʔalb* something that (1) reassures, soothes the nerves, (2) quenches thirst. - vn *tabríid*; ava *mibarrad*.
تبريد *tabríid* /vn/ ‖*ʔamiiṣ it-tabríid [auto]* cylinder sleeve. - *muhandis tabríid* engineer specializing in cooling systems.
مبرّد *mubarrid* /n pl *-aat*/ water cooler.
اتبرّد *ʔitbarrad* /vi/ to be cooled. - iva *mitbarrad*.
استبرد *ʔistabrid, ʔistabrad* /vt/ **1** to consider cold. *lamma ʔastabrad ig-gaww aʔuum ʔalbis balṭu* when I find the weather cold I put on a coat. **2** to consider shameless. — /vi/ **3** to behave shamelessly. *matistabrad-ʃ* behave yourself! - vn *ʔistibraad*; ava *mistabrad*.

[2] ب ر د
برد *barad (u)* /vt/ to file, file down. *bi-nubrud-u ʕaʃaan niʃíil iz-ziyadaat* we file it to remove the surplus. - vn *bard, baradaan*; ava *baarid*; pva *maḅruud*.
برادة *biraada, buraada* /coll n/ filings.
برّاد *barraad*[2] /n */ **1** filer. **2** fitter. *barraad kahrabaaʔi* electrical fitter.
مبرد *mabrad* **1** /n pl *mabaarid*/ file, rasp. *mabrad deel faar* a rat-tail file. ‖*lisaan-u mabrad* he has a sharp tongue. **2** /adj invar/ having a twill weave (of material).
اتبرد *ʔitbarad* /vi/ to be filed. - iva *mitbirid*.

[3] ب ر د
بريد *bariid* /n/ post, mail. *saaʕi bariid* postman, mailman. *sanduuʔ bariid* (1) mail-box. (2) post-office box. *ħayʔit il-bariid* the General Post Office. *bariid gawwi* airmail. *bi-ruguuʕ il-bariid* by return post.
بريدى *bariidi* /adj/ postal.

[4] ب ر د
بردة *burda* /n pl *-aat*/ *[obsol]* type of cloak or mantle worn by women.

[5] ب ر د see ب ر و د : *baruud, baruuda*

[6] ب ر د see ب ر ى د : *biriid*

ب ر د ج
بردج *biridj* <Engl> /n/ **1** bridge (card game). **2** *[naut]* bridge (of a ship).

ب ر د ه
برودروه *burudruh* or *burudurooh* <Fr *bordereau*> /n pl *-aat*/ *[comm]* account book.

ب ر د ر ى
برودرى *burudri* <Fr *broderie*> /n/ embroidery.

ب ر د ع
بردعة، برذعة *bardaʕa* /n pl *baraadiʕ*/ donkey-saddle (made of stuffed sacking). *yisiib il-ħumaar wi-yitfaṭṭar ʕal-bardaʕa [prov]* (he lets the donkey off but takes it out on the saddle) he punishes the weak for the faults of the strong out of fear of what the strong may do.

ب ر د ف –
برادیفير *biradifeer* (also *biladifeer*) <Fr *bras de fer*> /n/ Indian wrestling.

ب ر د ق
بردق *bardaʔ: ħoof bardaʔ* /prop n/ low-class district of Cairo. *zayy[i] btuuʕ ħoof bardaʔ* uncouth.

ب ر د ق –
بردقوش *bardaʔuuʃ, bardaʔooʃ* <P *marza-gosh*> /n/ marjoram.

ب ر د و
بوردو *burdu* <It *bordo*> /n/ *[naut]* **1** gunwale. *looḥ il-burdu* gunwale strake. **2** railing round a ship's deck.

ب ر د و ر
بردورة *burduura* <perh It *bordura*> /n pl *-aat*/ kerb-stone.

ب ر د ي
بردى *bardi* /coll n/ papyrus.

ب ر ذ ع see ب ر د ع

[1] ب ر ر
برّ *barr*[1] /n/ land (in contrast with sea). *ʔil-wuṣuul li-barr il-ʔamaan* a safe landfall. *ʔilli ʕal-barr*[a] *ʕawwaam [prov]* (he who is on land is a (strong) swimmer) ≈ it's easy to talk big when one is not put to the test, it's easier to criticize than to act. *ʔiḥna lissa ʕal-barr* (we're still on dry land) we haven't committed ourselves yet, there's still time to reconsider. *ṣoot-u ygiib il-barr* (his voice reaches the shore) his voice is extremely loud. *rasa ʕala barr* (to come eventually to

land) to reach a conclusion, find a solution, as in *ɛayziin nirsi ɛala barr* we want to settle the matter. *gab-ha l-barr* (to bring it to land) /used figuratively, usually in negative contexts/ (1) to bring about a satisfactory solution. (2) to behave in a reasonable fashion, as in *mif raadi ygib-ha l-barr* he's not prepared to behave reasonably.

برّى *barri* /adj */ **1** pertaining to land (as opposed to sea and air). *ʕin-naql il-barri* overland transport. **2** wild (as opposed to domestic). *ħamaam barri* wild pigeons.

برّيّة *barriyya*↑ /n/ open land, wasteland.

برّه، برّا *barra* **1** /prep/ outside. *barra maṣr* outside Egypt. *barra l-beet* outside the house. **2** /adv/ **2a** outside, out. *xalli l-kalb*^{i} *barra* keep the dog outside. *mil-ħeeṭa l-barra* from the wall outwards. *ʕif-farr*^{i} *barra w-biɛiid* ≈ God forbid! (prophylactic phrase accompanying the mention of something unpleasant). ‖ *ʕiṭlaq li-barra [naut]* head for sea! - ***min barra (l-)barra*** (1) without calling in at home, as in ***haat maɛaak jakitta*** *ɛaʃaan niruuħ is-sinima* ***min barra barra*** bring a jacket with you so that we can go straight on to the cinema. (2) on the sly, on the quiet, as in ***bi-yibqa*** *fid-dukkaan iṣ-ṣubḥ*^{i} *w-baɛd iḍ-ḍuhr*^{i} ***b-yiftaxal fi-warʃa*** *min barra barra* he's at the shop in the mornings and works on the sly at a workshop in the afternoon. **2b** abroad. *lissa raagiɛ min barra* he's just returned from abroad. – /nominally/ *bitaaɛ barra* from abroad, as in *ʂumaaʃ bitaaɛ barra* cloth from abroad.

برّانى *barraani* /adj */ **1** outer. *ʕil-baab il-barraani* the outside door. **2** /invar/ false. *filuus barraani* counterfeit money.

برّمائى *barr*^{i}*maaʕi* /adj/ amphibious.

ب ر ر^{2}

برّ *barr (i)* /vt/ to look after (o.s., especially by eating well). *birr*^{i} *nafs-ak* look after yourself (i.e. don't be so miserly with yourself). *bi-ybirr*^{i} *nafs-u* he is self-indulgent. - ava *baarir*.

برّ *barr*^{2} *(i)* **1** /vi/ to be faithful (to a promise). *barreet bi-waɛd-i* I kept my word. **2**↑ /vt/ to honour, treat with deference and devotion. ‖ *ħagg*^{i} ***mabruur*** greeting to one returning from a pilgrimage to Mecca. - vn *barr, birr*; ava *baarr*; pva *mabruur*.

برّ *birr* /n/ charitableness, piety, devotion.

بارّ *baarr* /adj pl *ʕabraar*/ **1** pious, righteous. **2** showing devotion (to parents, teachers etc.), charitable (to the poor etc.). – /n/ **3** Beneficent One (epithet of God).

المبرّة *ʕil-mabarra* (also *mustaffa l-mabarra*) /n/ fee-paying hospital organization (with branches throughout Egypt).

برّر *barrar* /vt/ to justify. *ʕil-ɣaaya tbarrar il-wasiila* the end justifies the means. - vn *tabriir*; ava *mubarrir*↑.

مبرّر *mubarrir* /n pl *-aat*/ reason, justification. *ʕeeh mubarriraat-ak* what are your reasons?

اتبرّر *ʕitbarrar* /vi/ to be justified. - iva *mitbarrar*.

ب ر ر^{3}

برّ *barr*^{3} /n pl ***buruur***/ **1** door-jamb. **2** window-ledge.

ب ر ر و

برّو *birru* /n/ *[naut]* bolt, lug.

ب ر ر ي ه

برّيه *burreeh* <perh T *bire*> *[women]* exclamation of exasperation ≈ that's the limit! *burreeh minnak* you're the limit!

ب ر ز^{1}

برز *baraz*^{1} *(i, u)* /vi/ **1** to protrude, project. *ʕil-ħuruuf bi-tibriz min il-xalf* the letters protrude from the other side. **2** to become outstanding. *faxṣiyyaat barza* prominent personalities. **3** to amount to a surplus (of money etc.). *ħalaat buruuz ʕiraad* instances of surplus takings. - vn *buruuz*; ava *baariz*.

بروز *buruuz* /n pl *-aat*/ **1** protrusion. **2** dowel.

بارز *baariz*^{1} /n pl *bawaariz*/ **1** surplus. *baariz ʕiraad* surplus receipts. **2** /pl only/ *[bank]* unaccountable surplus of money after auditing.

بارزة، برزة *barza, burza* /n pl *buruuz*/ facial crest (of a horse).

براز *buraaz* /n/ faeces, solid excrement.

اتبرّز *ʕitbarraz* /vi/ to defecate. - ava *mitbarraz*.

بارز *baariz*^{2} /vt/ to fight a duel with. - vn *mubarza*; ava *mubaariz*.

مبارزة *mubarza* /n pl *-aat*/ duel.

اتبارز *ʕitbaariz* /vi/ **1** to duel. **2** to be fought with in a duel. - ava/iva *mitbaariz*.

أبرز *ʕabraz* /vt/ **1** to emphasize. *ʕil-loon il-ʕazraq bi-yibriz gamaal ɛenee-ki* blue shows off the beauty of your eyes. **2** to bring out. *laazim tibriz gawaaz is-safar* you must show your passport. - vn *ʕibraaz*; ava *mubriz*.

ب ر ز^{2}

برز *baraz*^{2} *(i, u)* <perh P *barâz*> /vt/ to join together (two ends of a broken thread, strand of wool etc.). *ʕibriz il-fatla di kiwayyis* join this thread together firmly! - vn *buruuz*; ava *baariz*.

برّز *barraz* = *baraz*^{2}. - vn *tabriiz*.

مبرّزاتى *mubarrazaati* /n pl *-yya*/ *[text]* warp-mender in a weaving shop.

ب ر ز [3] see ب ر ی ز : *bariiz, bariiza*

ب ر ز ی ل
البرازيل *ʔil-baraziil* /prop n/ Brazil.
برازيلى *baraziili* **1** /adj */ Brazilian. **2** /n */ a Brazilian.

ب ر س see ب ر ی س : *bariis*

ب ر س ت
بريستو *biristu* <brand name *Presto*>: *ḫalla bristu* pressure cooker.

(ب ر س ت –)
بروستاتة *burustaata, burustaata* /n/ *[anat]* prostate gland.
برستول *biristul* <Engl *Bristol*>: *waraq biristul* a type of medium-grade heavy white paper, used for drawing and calligraphy.
بروستانتى *burustanti* <Engl> /adj pl *burustant*/ *[Chr]* Protestant. - also *burutistanti*.

ب ر س ف –
بروسفارين *birusfariin* <cf Gr *prospherein*> /n/ *[Chr]* cloth with which the offertory is covered on an altar. - also *ʔibrusfariin*.

ب ر س ل
برسل *bursul* /n pl *baraasil*/ *[text]* selvage.

ب ر س ل –
بورسيلين *bursiliin* <Engl> /n/ porcelain.
بورسيلان *bursilaan* <Fr *porcelaine*> /n/ porcelain.

ب ر س و م
برسوم *barsuum* /prop n/ male given name. ‖*qiraaṭ barsuum* linear measure equal to 0.087 centimeters.

ب ر س و –
برسوار *biriswaar* (also *biniswaar*) <Fr *périssoire*> /n pl *-aat*/ paddle-board, surf-board.

ب ر س ی م
برسيم *barsiim* <Copt> /coll n/ Egyptian clover (Trifolium alexandrinum). ‖*toor allaah fi-barsiim-u* see *toor*.
براسيم *barasiim* /pl n/ fields of clover.
برسيمى *barsiimi* /adj invar/ bright green in colour.

ب ر ش
برش *baraf (u)* <Copt> **1** /vi/ to sit or squat (on the ground) without concern for decorum or the cleanness of the place. **2** /vt/ to sit (s.o.) down (on the ground). - vn *barfa, barfa*; ava *baarif, baarif*; pva *mabruuf, mabruuf*.
برش *burf* <Copt> /n pl *ʔabraaf*/ coarsely-woven mat of palm leaves or palm fibre (used particularly in prisons for sleeping on).
اتبرش *ʔitbaraf* /vi/ to sit or squat (on the ground) without concern for decorum or the cleanness of the place. - ava *mitbirif*.
انبرش *ʔinbaraf* = *ʔitbaraf*.
مبرّش *mibarraf* /adj */ sitting or squatting on the ground.

ب ر ش ت
برشت *birift* or *buruft* <P *birishta*> /adj invar/ soft-boiled (of eggs).

ب ر ش ت ت
باراشوتّ *barafutt* <Fr> /n pl *-aat*/ parachute. - also *barafuut*.

ب ر ش م
برشم *barfim* /vt/ **1** to rivet, seal or fix tightly. **2** *[slang]* to make small written notes for use in cheating in (an examination). - vn *barfama*; ava/pva *mibarfim*.
برشام *birfaam, burfaam* <P *parchîn*> /coll n/ **1** pill(s). **2** rivet(s). *markib birfaam* a riveted ship. **3** *[slang]* minutely written material for use in cheating in an examination.
برشامة *birfaama, burfaama* /unit n, pl *-aat*/ **1** a pill. **2** a rivet. **3** /also pl *barafiim, barafiim*/ *[slang]* crib, note for use in cheating in an examination.
اتبرشم *ʔitbarfim* /vi/ **1** to be riveted, be tightly sealed or fixed. **2** *[slang]* **2a** to be cheated in (of an examination, when cribs are used). **2b** to be minutely written for use as a crib in an examination. **3** to fall silent, shut up. - ava/iva *mitbirfim*.

ب ر ش و ت
باراشوت *barafuut* <Engl> /n pl *-aat*/ parachute. - also *barafutt*.

ب ر ش و م
برشوم *barfuum* /prop n/ Barshum, a town in Qalyubiya province.
برشومى *barfuumi* /adj */ pertaining to or from Barshum. ‖*tiin barfuumi* figs (in contrast with *tiin fooki* prickly pears).

ب ر ص [1]
برّص *barraṣ* /vt/ *[naut]* to splice. - vn *tabriiṣ*; ava/pva *mibarraṣ*.

² ب ر ص
برص *baraṣ* /n/ *[path]* vitiligo.
أبرص *ʔabraṣ* /adj, fem *barṣa*, pl *burṣ*/ afflicted with vitiligo.
مبورص *mibooraṣ* /adj */ afflicted with vitiligo.

³ (ب ر ص)
برص *burṣ* /n pl *ʔabraaṣ*/ gecko. *ʕaamil zayy il-burṣ* small and shrivelled in appearance. *ḫabb-ak burṣ* may a gecko kiss you! (a curse based on the folk belief that the gecko is a carrier of skin disease, mainly used in curt response to *ʔana b-aḫibb-ik*).
بورصة *burṣa* <It *borsa*> /n pl *-aat*/ **1** stock exchange, bourse. **2** large café.

ب ر ض ك see ب ر ض و : *barḍak*

ب ر ض و
برضو، برضه *barḍu* (also *barḍak*) <perh T *bir de*> /adv/ **1** also, too. *ḫa-tiigi maʕaana barḍu* are you going to come with us too? **2** nevertheless, even so, all the same. *barḍu miʃ faahim qaṣd-ak ʔeeh* even so, I don't understand what you mean. *b-aqrab-ha kull¹ yoom wi-barḍu ma-fii-ʃ fayda* I beat her every day but still it makes no difference. **3** intensifier ≈ really, surely. *miʃ kida barḍu* isn't that so? don't you agree? *huwwa da kalaam barḍu* is that any way to talk? ‖ *kida barḍu* response of reproach ≈ really now!

ب ر ط
برط *baraṭ (u)* /vi/ *[coarse]* to defecate. - vn *barṭa*; ava *baariṭ*; pva *mabruuṭ*.
برطة *barṭa* /n pl *-aat, buraṭ*/ *[coarse]* faeces, shit.
اتبرط *ʔitbaraṭ* /vi/ *[coarse]* to sit or squat (on the ground).

ب ر ط ا ن
بريطاني *biriṭaani, bariṭaani* **1** /adj */ British, (loosely) English. **2** /n */ a Briton, (loosely) an Englishman.

ب ر ط س see ب ر ط و س : *barṭuus*

¹ ب ر ط ش
برطوش *barṭuuf¹* /coll n/ old out-of-shape shoes.
برطوشة *barṭuuʃa* /n pl *baraṭiiʃ*/ old out-of-shape pair of shoes. ‖ *kalaam il-baraṭiiʃ* (verbal) clangers. - *raas-u w-ʔalf¹ barṭuuʃa* (or *-baraṭiiʃ il-balad) ma-* he won't ... at any price, as in *ras-ha w-ʔalf¹ barṭuuʃa ma-tsaafir maʕaahum* wild horses won't make her travel with them. - *manquuʕ il-baraṭiiʃ* cheap liquor, rot-gut.
برطش *barṭaʃ* /vt/ **1** to wear (shoes) until out of shape. ‖ *ḫ-abarṭaʃ-ak* I'll flatten you! — /vi/ **2** to act clumsily or ineffectively. *ʔir-raagil da bi-ybarṭaʃ fi-ʃuɣl-u* that man does a sloppy job. **3** to run, blotch (of colours, paints etc.). - vn *barṭaʃa*; ava/pva *mibarṭaʃ*.
اتبرطش *ʔitbarṭaʃ* /vi/ to be worn out of shape (of shoes). - iva *mitbarṭaʃ*.

² ب ر ط ش see ب ر ط و ش : *barṭuuʃ²*

ب ر ط ط
برطّ *buruṭṭ* /adj pl *-aat*/ slothful and slovenly.
برطّة *buruṭṭa* = *buruṭṭ*.

ب ر ط ع
برطع *barṭaʕ* /vi/ **1** to gallop about, run and prance about (of donkeys). **2** *[joc]* to gallivant about, gad about. *ʔil-waaḫid yixallaṣ imtiḫanaat wi-ybarṭaʕ baqa ʕala keef-u* one finishes exams and then one's free to gad about as it suits one. - vn *barṭaʕa*; ava *mibarṭaʕ*.

ب ر ط ل
برطيل *barṭiil* /n pl *barṭiil*/ bribe.
برطل *barṭal* /vt/ to bribe. - vn *barṭala*; ava/pva *mibarṭal*.
اتبرطل *ʔitbarṭal* /vi/ to be bribed. - iva *mitbarṭal*.

¹ ب ر ط م
برطم *barṭam* (also *barṭan*) /vi/ **1** to speak gibberish, talk incoherently. *mibarṭam zayy it-turk* ≈ talking double-Dutch. **2** to mutter crossly, grumble. - vn *barṭama*; ava *mibarṭam*.

² ب ر ط م see ¹ ب ر ط و م : *barṭuum*

ب ر ط م –
برطمان *barṭamaan* <*Martaban* (in Burma)> /n pl *-aat*/ glass or plastic jar with lid, jam jar. - also *baṭramaan*.
برطمانة *barṭamaana* = *barṭamaan*. - also *baṭramaana*.

ب ر ط ن see ب ر ط م : *barṭan*

ب ر ط و س
برطوس *barṭuus* <It *pertuzo*> /n pl *baraṭiis*/ *[naut]* seamen's quarters or storeroom (on a steamer). - also *barṭuuf*.

ب ر ط و ش
برطوش *barṭuuf²* <It *pertuzo*> /n pl *baraṭiiʃ*/ *[naut]*

seamen's quarters or storeroom (on a steamer). - also *barṭuus*.

ب ر ط و م
برطوم *barṭuum* <It *bertone*> /n pl *baraṭiim*/ **1** beam or block of wood. **2** pontoon, beam. **3** *[naut]* lighter.

ب ر ع
برع *baraɛ (a)* /vi/ to become skilled, excel. *baraɛtⁱ fil-koora* I excelled in football. - vn *baraaɛa*; ava *baariɛ*.
أبرع *ʔabraɛ* /el/ more/most skilled.
اتبرّع *ʔitbarraɛ* /vi/ to make a donation. *ɛawziin naas titbarraɛ bi-damm* they want people to donate blood. - vn *tabarruɛ*; ava *mitbarraɛ*.
تبرّع *tabarruɛ* /n pl -*aat*/ donation.

ب ر ع م
برعم *burɛum*↑ /n pl *baraaɛim*/ bud. ‖ *ʔil-baraaɛim* the younger generation.

ب ر غ ت
برغوت، برغوث *barɤuut* /n pl *baraɤiit*/ flea. *kullⁱ barɤuut ɛala qaddⁱ dammˆ-u [prov]* ≈ from each according to his ability. ‖ *baraɤiit is-sitt* sugar-coated caraway seeds. - *ḥafiifit il-baraɤiit* fleawort (Plantago psyllium).
مبرغت *mibarɤit, mibarɤat* /adj */ flea-infested.

ب ر غ ش
برغش *barɤaf* /vt/ to prick holes in (a paper pattern, in order to transfer a design). - vn *barɤafa*; ava *mibarɤaf*.

ب ر غ ل [1]
برغل *burɤul*[1] <prob T *burgu*> /n pl *baraaɤil*/ any of a variety of tools for making and adjusting holes in metal.
برغل *barɤal* /vt/ to smooth off, edge off (holes bored in metal). - vn *barɤala*; ava/pva *mibarɤal*.

ب ر غ ل [2]
برغل *burɤul*[2] <T *burgul*> /n/ boiled and crushed wheat, used in the preparation of certain dishes.

ب ر ف see ب ر و ف: *biroova*

ب ر ف ا ن
بارافان *barafaan, baravaan* <Fr *paravent*> /n pl -*aat*/ screen, folding screen. - also *barawaan*.

ب ر ف س ت
بروفستا *burufista* <It *provvista*> /n/ *[naut]* provisions.

ب ر ف ی ل
بروفيل *birufiil* <Fr> /n/ profile. - /adverbially/ *ʕuqaf birufiil* stand sideways-on.

ب ر ف ی ن
برافين *barafiin* <Engl> /n/ paraffin. *zeet barafiin* mineral oil.

ب ر ق
برق *baraq (u)* /vi/ **1** to shine, sparkle. *bi-nnaḍḍaf-u wi-nlammaɛ-u ɛafaan yubruq* we clean and polish it so it shines. **2** to flash (of lightning). - vn *barq*; ava *baariq*.
برق *barq* /n/ lightning. *raɛdⁱ w-barq* thunder and lightning.
برقة *barqa* /n pl -*aat*/ **1** gold disc on a necklace. **2** metal sequin.
برقيّة *barqiyya* /n pl -*aat*/ telegram.
بريق *bariiq* /n/ **1** glitter, lustre. **2** allure. *ḥaaga liiha bariiq xaaṣṣⁱ lis-saayiḥ* something with a special appeal for the tourist.
برّاق *barraaq* /adj/ radiant. *ʕalwaan barraaqa* radiant colours.
مبرق *mabraq* /n pl *mabaariq*/ telegraph transmitter.
برّق *barraq* **1** /vt/ to open (the eyes) wide. *ʕinta bi-tbarraq ɛenee-k kida leeh* why are you staring like that? **2** /vi/ to stare, open wide (of the eyes). *ɛenee barraqit wi-ɤaab ɛan il-waɛy* his eyes were fixed and he lost consciousness. - vn *tabriiq*; ava *mibarraq*.

ب ر ق ع
برقع *burquɛ* /n pl *baraaqiɛ*/ **1** veil (usually of black crepe and gold) worn to cover the lower part of the face (see Pl.F, 8). *ʃayla burquɛ il-ḥaya* she has taken off the veil of modesty (said of a woman who behaves in a shameless fashion). *ʕil-ʃaḥsan tilbis burquɛ* (you'd better wear a veil) ≈ you behave like a woman (an insult to a man). *taḥt il-baraaqiɛ simmⁱ naaqiɛ [prov]* (under the veil is deadly poison) though modest in appearance, a person may be highly immoral. **2** valance, pelmet. **3** wattle (on the head of a turkey etc.).
برقع *barqaɛ* /vt/ to veil with a *burquɛ*. - vn *barqaɛa*; ava *mibarqaɛ*.
اتبرقع *ʔitbarqaɛ* /vi/ to veil o.s., put on a veil. *ɛandina burquɛeen burquɛ itbarqaɛnaa-bu w-burquɛ ma-tbarqaɛna-buu-ʃ* we have two veils, one we have worn and one we haven't (a tongue-twister). - ava *mitbarqaɛ*.

ب ر ق و ق
برقوق *barquuq* <Gr *praikokion*> /coll n/ plum(s).

برقوقة *barquuqa* /unit n, pl *-aat*/ a plum.
برقوقاية *barquqaaya* = *barquuqa*.

ب ر ك ¹
بركة *baraka* /n pl *-aat, -aat*/ blessing, grace, divine favour (manifested especially as good fortune, plenitude) charismatic quality. ‖ *ʔil-baraka fii(k)* (1) thanks to (you), the credit should go to (you), as in *kull*^{i} *ʃeeʔ tamm*^{i} *zayy*^{i} *ma-nta ʕaayiz - ʔil-baraka f-bint-i* 'Everything went just the way you wanted.' 'It's all thanks to my daughter.' (2) it all depends on (you), as in *dawwar ʕala waẓiifa taakul minha ʕeeʃ - ʔil-baraka fiik* 'Find yourself a job to keep body and soul together.' 'I'm depending on you (to find me one).' (3) expression of condolence ≈ it's for you to fill the place of the deceased. - *bil-baraka* ≈ without undue concern, without bothering to be precise, as in *bi-yaaxud filuus-u bil-baraka* he takes his money without counting it, *bi-ybiiʕ il-baṭṭiix bil-baraka* he sells water-melons without bothering to weigh them. - *(w-allaahi) baraka* thank heavens! - *baraka ya gaamiʕ (illi gat minnak wala gat-ʃ*^{i} *minna*) exclamation of relief at finding oneself released from an obligation. - *ʕallit barakit-u* it is (or was) no longer successful. - *ʕillit baraka* a source of misfortune. - *ʕaliil il-baraka* scanty, insufficient, as in *ʔil-bufteek da ʕaliil il-baraka* - *ʔiʕmili-lna ṭabiix* fried steak doesn't go very far; make us a stew! - *ḥaṣalit il-baraka* ≈ you have brought a blessing to our house (said to a guest). - *ya barakit duʕa l-waldeen*^{i} may the blessing of my parents' prayers assist me (said before any undertaking). - *ʕala barakit illaah* invocation of God's blessing (said before any undertaking). - *ʔil-xeer wil-baraka* source of good fortune, as in *da-nta (fiik) il-xeer wil-baraka* we can always depend on you for anything. - *ʔil-baraka fil-bukuur* ≈ the early bird catches the worm. - *luʕmit il-baraka [Chr]* (a piece of) unconsecrated eucharistic bread. - *ḥabbit il-baraka* seed of fennel flower (Nigella sativa) used in the preparation of, e.g., chest ointment and some types of bread.
أبرك *ʔabrak* /el/ more/most useful, effective, etc. *da l-faṣṣ il-waaḥid min il-burtuʕaan ʔabuṣurra ʔabrak min ʕafara min is-sukkari* one segment of a navel orange is more nourishing than ten of a *sukkari* one.
بروكة *baruuka, baruuka*^{1} /n pl *-aat*/ lucky piece, charm. *ʔana ʃayil-ha baruuka* I'm carrying it for luck.
مبروك *mabruuk* **1** /adj */ blessed with divine favour. *ʔaxuu-k da raagil mabruuk* your brother has a saintly air about him. *rabb-i-na yigʕal-ha sana mabruuka ʕaleek* may God make it a prosperous year for you! **2** plentiful (beyond expectation). *ʔil-mahiyya mabruuka f-ʃahr-i-da* the wages have gone a long way this month. *ʔakl*^{i} *mabruuk* food that proves to be sufficient for more people than expected. **3** /invar/ congratulatory exclamation said to someone on a happy occasion or on the acquisition of something new ≈ congratulations! as in *mabruuk ʕala l-jakitta* congratulations on the new jacket! *ʔalf*^{i} *mabruuk* many congratulations! ‖ *mabruuk ʕal-ʔarḍ* congratulàtions on your new shoes!
مبروكة *mabruuka* /n/ measles.
بارك *baarik* /vi/ **1** to give blessing. *rabb-i-ña miʃ ḥa-ybarik-lu f-ʕiyaal-u* God will not bless him with regard to his children. ‖ *ʔallaah yibaarik fiik* (God bless you) (1) conventional response to *mabruuk*. (2) expression of thanks for a favour or service rendered. **2** *[Chr]* **2a** to pronounce a blessing, invoke a blessing. **2b** to say grace (before a meal). **3** to give congratulations. *bi-ybarku l-baʕḍ* they congratulate each other. — /vt/ **4** *[Chr]* to bless. - vn *mibarka*; ava *mibaarik*.
مبارك *mubaarak* **1** /adj */ fortunate, blessed. *ramaḍaan mubaarak* blessed and happy Ramadan. ‖ *xaṭwa mbarka* ≈ what good fortune brought you here! (greeting to a visitor). - *ya mubaarak* friendly form of address imputing naivety, as in *kull in-naas masmuuḥ luhum is-safar bass*^{i} *miin ya mubaarak illi ʕandu fluus* (of course) everyone is allowed to travel, but bless your heart, who do you think can really afford it! **2** congratulatory exclamation said to someone on a happy occasion or on the acquisition of something new ≈ congratulations!, as in *mubaarak ʕal-fustaan* congratulations on the (new) dress!
اتبارك *ʔitbaarik* /vi/ **1a** to receive a blessing. *kull*^{i} *ma b-aʃuuf-u b-atbaarik-bii* it's always a blessing to see him. *ʔin-naas tiruuḥ iḍ-ḍariiḥ ʕalaʃaan titbaarik bii* people go to the tomb to receive a blessing. **1b** *[Chr]* to be blessed (ritually). *baʕd il-ʕaruseen ma tbarku* after the bride and groom have been blessed. **2** to be converted into a blessing. *lamma tiʕmil ṭayyib bi-yitbarik-lak fi-gary-ak* when you do good it brings you a blessing in your daily life. - ava/iva *mitbaarik*.
تبارك *tabaarak: tabaarak allaah*↑, *tabaarak il-xallaaq* blessed be God! used as an exclamation of wondrous admiration, as in *ʕaleeha gamaal tabaarak il-xallaaq (fiima xalaq)* ≈ she's such a beauty! blessed be God for creating her!
استبرك *ʔistabrak* = *ʔitbaarik* 1a. - ava *mistabrak*.
استبارك *ʔistibaarik* = *ʔitbaarik* 1a. - iva *mistibaarik*.

² ب ر ك

برك *barak, birik (i)* /vi/ **1** to kneel (particularly of a camel). **2** to throw one's whole weight (on top of s.o. or s.th.). *waqqaʕt-u fil-ʔarḍ^{i} w-barakt^{i} fooq-u* (or *ʕalee*) I threw him to the ground and flung myself upon him. ‖ *barak ʕal-filuus* he appropriated all the money. **3** to reach the end of one's endurance. *qaʕadit tiftaxal fil-maktab wil-beet wi-tihmil fi-ʔakl-a-ha l-ɤaayit-ma barakit* she went on working in the office and the house, and neglecting her food till she was in a state of complete collapse. - ava *baarik*.

برّك *barrik* /vt/ **1** to make (a camel) kneel. **2** to make someone fall (on s.o. or s.th.). - vn *tabriik*; ava *mibarrik*.

اتبرّك *ʔitbarrik* /vi/ passive of *barrik*. - iva *mitbarrik*.

³ ب ر ك

بركة *birka* /n pl *birak*/ pool, pond. ‖ *wiff il-birka* a *ḥayy* in Central Cairo (formerly known in particular as a red light district). - *birkit il-fiil* a *ḥayy* in Cairo, between Sayyida Zaynab and the Citadel.

⁴ ب ر ك see ب ر و ك: *baruuka*²

⁵ ب ر ك see ب ر ي ك: *bureek, bureeka*

ب ر ك ا ر

بروكار *burukaar* <Fr *brocart*> /n/ brocade.

ب ر ك ا ن

بركان *burkaan* /n pl *barakiin*/ volcano.

ب ر ك ي ت

بركيتة *barkiita* <It *barchetta*> /n/ *[naut]* ship's log.

ب ر ك ي ه

بركيه *barkeeh* <Fr> /n pl *-aat*/ parquet flooring.

ب ر ل ك س

برلكس *barlaks* <perh Gr *parallaksis*> /n pl *-aat*/ *[Chr]* antiphon.

ب ر ل ن ط

برلنط *birlanṭ* <It *brillante*> /n/ brilliant-cut diamond. *xaatim birlanṭ* diamond ring.

¹ ب ر م

برم *baram (u)* /vt/ **1a** to twist, twirl. *baram ʃanabaat-u* he twirled his moustache. *laazim tubrum il-ḥabl* you must twist the rope. **1b** *[text]* to rove (threads or fibres). **2** to roll, roll up. *kunaafa mabruuma* kunaafa wrapped spirally round a filling (usually of nuts) to form rolls. ‖ *ʔibrum-ha* ≈ you know where you can stuff that! — /vi/ **3** to be frittered away (of money). **4** to wander about, go around. *baramna wi-tfassaḥna* we wandered around and enjoyed ourselves. - vn *barm*; ava *baarim*; pva *mabruum*.

¶ *baram ʕala* to search for. *fiḍilt abrum ʕalee li-ḥadd^{i} ma xadt^{i} fluus-i* I kept on looking for him until I got my money.

مبروم *mabruum* /n/ *[text]* worsted.

مبرومة *mabruuma* /n/ **1** cylindrical variety of mango. **2** okra. **3** home-made pasta rolled into very small pieces, steamed and served with sweetened milk.

برمة *burma*¹: *musmaar burma* screw. *masamiir burma* screws.

برمجي *burmagi* /n pl *-yya*/ **1** one who is suave and commanding. **2** philanderer. see further under ¹ ب ر م ج

برم *buram* /adj invar/ **1** suave and commanding. **2** dissolute.

برم *burum: ʃurum burum* (1) mess, chaos. *ʔil-ḥikaaya ʈilʕit ʃurum burum* the thing turned out a mess. (2) nonce phrase used in spells ≈ abracadabra.

بريم *bariim* = *burmagi*.

برّام *barraam* /n */ **1** *[text]* rover, operator of a roving machine. **2** *barraam (ḥabl) [naut]* rope-spinning swivel. **3** devious person, twister.

برّيمة *barriima* /n pl *-aat*/ **1** thread (of a screw). *musmaar barriima* a screw. — /pl *bararim, barrimaat*/ **2** corkscrew. **3** swirl (of hair, on a horse). **4** rowlock. **5** (oil) drill.

اتبرم *ʔitbaram* /vi/ **1a** to be twisted, be twirled. **1b** *[text]* to be roved. **2** to be rolled, be rolled up. - iva *mitbirim*.

انبرم *ʔinbaram* = *ʔitbaram*. - iva *minbirim*.

برّم *barram* /vt and vi/ **1** to twist, twirl (a number of things or a number of times). *qaaʕid yibarram (f-) ʃanabaat-u* he keeps on twirling his moustache. **2** *[text]* to rove (a number of threads or fibres). - vn *tabriim*; ava/pva *mibarram*.

أبرم *ʔabram↑* /vt/ to conclude (e.g., a contract), ratify (e.g., a treaty). - vn *ʔibraam*.

إبرام *ʔibraam* /vn/ ‖ *maḥkamit in-naqḍ^{i} wil-ʔibraam [leg]* Court of Cassation. - *ʔayy^{i} ḥukm^{i} yquul-u ma-f-huu-ʃ naqḍ^{i} ʔaw ʔibraam* no decision of his is ever challenged.

² ب ر م

برمة *burma*² /n pl *buram*/ (squat narrow-necked) earthenware vessel (see Pl.A, 4).

برام *biraam* /n pl *ʕibrima, birima/* earthenware casserole.

ب ر م [3]
برما *birma* /prop n/ small town near Tanta, renowned for egg production. ‖ *ḥisbit birma* an insoluble problem, an inexplicable matter (i.e. which only the quick-witted egg merchants of Birma could work out).

ب ر م [4] see ب ر و م : *baruuma*

ب ر م [5] see ء ب ر ى م : *ʕabriim, ʕabriimi*

ب ر م ب
برمبة *burumba* <*Burumba* (in Guiza province)>: *sabɛ[i] burumba [deris]* swank, coxcomb.

ب ر م ت ر
بارومتر *barumitr* <Fr *baromètre*> /n pl *-aat/* barometer.

ب ر م ج [1] see also ب ر م [1]
برمجة *barmaga↓* /n/ **1** suaveness, artful sophistication. **2** dissoluteness.
اتبرمج *ʕitbarmag[1]* /vi/ **1** to affect an appearance of sophistication. *ma-titbarmag-ʃ[i] ɛaleena ya ɛamm - da-ḥna naas ʏalaaba* don't be highfalutin with us, mate, we're only ordinary folk. **2** to behave in a dissolute fashion. - ava *mitbarmag*.

ب ر م ج [2]
برنامج *birnaamig* /n pl *baraamig/* **1a** programme. *birnaamig musiiqi* musical programme. *birnaamig ɕeefi* summer programme. **1b** (computer) program. **2** curriculum, timetable, schedule.
برمج *barmag↑* /vt/ to programme. - vn *barmag↑*; ava/ pva *mibarmag*.
اتبرمج *ʕitbarmag[2]↑* /vi/ to be programmed. - iva *mitbarmag*.

ب ر م ق
برمق *barmaq* <T *parmak*> /n pl *baraamiq/* **1** banister. **2** spoke (of a wheel). - also *barnaq*.

ب ر م ن -
برمنجنات *birmanganaat* <Fr> /n/ potassium permanganate.

ب ر م ه -
برمهات *baramhaat* <Copt> /n/ seventh month of the Coptic year (10 March - 8 April). *baramhaat ruuḥ il-ʏeeṭ wi-haat* in Baramhaat (it is time to) go to the field and bring (whatever you like, because the fields are full of crops).

ب ر م و د
برموده *baramuuda* <Copt> /n/ eighth month of the Coptic year (9 April - 8 May). *baramuuda duqq if-fiɛiir bil-ɛamuuda wala yibqa fil-ʏeeṭ wala ɛuuda* in Baramuuda pound the barley with the pestle, and let not a stalk remain in the field.

ب ر م و ن
برمون *baramoon* <Gr *paramonê*> /n/ *[Chr]* **1** period of fasting before the feasts of Christmas and Epiphany (in the Coptic Church). **2** the day before a feast day.

ب ر م ى ل
برميل *barmiil* /n pl *baramiil, baramiil/* **1** barrel. *ɛuqdit taṣbiin barmiil* barrel hitch. ‖ *barmiil yadd* Archimedes' screw. **2** capstan.
براميلجى *baramiilgi* /n pl *-yya/* cooper.

ب ر ن
برنيّة *birniyya, barniyya* /n pl *baraani/* earthenware pot or dish glazed on the inside.

ب ر ن ا - see ب ر م ج [2] : *birnaamig*

ب ر ن ج
برنج *burung* <T *bürüncük*> /n/ *[obsol]* georgette crepe, gauze. - also *burunguk, burunguq, burungug*.

ب ر ن ج ى
برنجى *biringi* <T *birinci*> /adj invar/ **1** first. **2** best.

ب ر ن ج - see ب ذ ن ج - : *biringaan*

ب ر ن د
برندة *baranda* <prob Engl> /n pl *-aat/* veranda. - also *faranda*.

ب ر ن ز
برونز *burunz* <perh Fr> /n/ **1** bronze. **2** metallic paint. *burunz[i] dahabi* gold metallic paint.
برونزة *burunza*: such phrases as *ma-maɛii-ʃ wala brunza* I haven't a penny.
برونزى *burunzi* /adj/ **1** pertaining to bronze. **2** bronze-coloured.

(ب ر ن س)
برنس *burnus* /n pl *baraanis*/ **1** cape or cloak (usually with a hood). **2** *[Chr]* cope worn by priests and bishops during the liturgy. **3** bathrobe, beachrobe.
برنس *birins* <Engl> /n pl *-aat*/ prince.
برنسيسة *birinsiisa* <Engl> /n pl *-aat*/ princess.

ب ر ن ك
برنك *birink* <It *paranco*> /n pl *-aat*/ running stretcher (in a slaughterhouse) on which a carcass is hung.

ب ر ن ق [1]
برنق *barnaq'* **1** /vt/ to cause (the eyes) to stare. *kaan mibarnaq-li ɛenee* he was staring at me. **2** /vi/ to stare. - ava *mitbarnaq*.

ب ر ن ق [2]
برنق *barnaq²* <T *parmak*> /n pl *baraaniq*/ **1** banister. **2** spoke (of a wheel). - also *barmaq*.

ب ر ن ى ط
برنيطة *burneeṭa* /n pl *baraniiṭ, burneṭaat*/ **1** hat. **2** lamp shade.

ب ر ه [1]
البوره *ʔil-burah* /prop n/ male spirit sometimes invoked in the *zaar*.

ب ر ه [2] see ب ر ى ه : *bireeh, bureeh*

ب ر ه م
البرهاميّة *ʔil-burhamiyya* /prop n/ Sufi Order named after Sidi Ibrahim ed-Disuqi.

ب ر ه ن
برهان *burhaan, burhaan↑* /n pl *barahiin*/ **1** proof, evidence. *ʔeeh il-burhaan ɛala wuguud illaah* what is the proof of God's existence? **2** sign, token, augury.
برهن *barhan* /vi/ to give proof, provide evidence. *laazim tibarhan ɛak-kalaam da* you have to back up this assertion with proof. - vn *barhana*; ava *mibarhan*.
اتبرهن *ʔitbarhan* /vi/ (impersonal) passive of *barhan*. *ʔik-kalaam da tbarhan ɛalee* that claim was proved. - iva *mitbârhan*.

ب ر و [1]
بروة *barwa'* <perh P *pâro*> /n pl *baraawi*/ plasterer's trowel.

ب ر و [2] see ب ر ى [1] : *barwa²*

ب ر و ان
بروان *barawaan* <Fr *paravent*> /n pl *-aat*/ screen, folding screen. - also *barafaan, baravaan*.

ب ر و ج ى see ب و ر ى : *buruugi*

ب ر و د
بارود *baruud* <perh P *bârûd*> /n/ gunpowder. *malḥ baruud* saltpetre.
بارودة *baruuda↓* /n pl *baruud*/ rifle.

ب ر و ز
بروز *birwaaz* <T *pervaz* from P> /n pl *barawiiz*/ any frame or edging (e.g., picture frame).
براويزجى *barawizgi* /n pl *-yya*/ (picture) framer.
بروز *barwiz* /vt/ to frame, surround. ‖*ḥ-abarwiz ʔism-ak* I'll hold you in great esteem. - vn *barwaza*; ava/pva *mibarwiz*.
اتبروز *ʔitbarwiz* /vi/ to be framed, be surrounded. - iva *mitbarwiz*.

ب ر و ش
بروش *buroof* <Fr *broche*> /n pl *-aat*/ brooch.

ب ر و ف
بروفة *biroova* <It *prova*> /n pl *-aat*/ **1** rehearsal. **2** fitting. *ʔit-tarzi ɛawiz-ni li-broova tanya* the tailor wants me for another fitting. **3** *[print]* proof, proof sheet.

ب ر و ق
برق *barwaq* **1** /vt/ **1a** to cause to shine. **1b** to make resplendent (especially by decoration and ornamentation). *kaanit mibarwaqa ʔoodit in-noom tamaam* she had made the bedroom look splendid. **2** /vi/ to shine, gleam. - vn *barwaqa*; ava/pva *mibarwaq*.
اتبروق *ʔitbarwaq* /vi/ **1** to shine, gleam. **2** to become or be made resplendent. - ava/iva *mitbarwaq*.

ب ر و ك
باروكة *baruuka²* <perh It *parrucca*> /n pl *-aat*/ wig.

ب ر و ل
برول *barwil* **1** /vt/ to crumble (between the fingers). **2** /vi/ to become crumbly. *ʔil-fiṭiir mibarwil xaaliṣ* the pastry is very crumbly. - also *farwil*. - vn *barwala*; ava *mibarwil*.
اتبرول *ʔitbarwil* /vi/ **1** to be crumbled. **2** to become crumbly. - also *ʔitfarwil*. - ava/iva *mitbarwil*.

(ب ر و م)
بارومة *baruuma*[1] <Gr *brôma*> /n/ rust, corrosion.
برومة *baruuma*[2] <It *paroma*> /n/ *[naut]* mooring rope, painter.

ب ر و و
بروّة *baruwwa* <It *prua*> /n pl *-aat*/ *[naut]* bow (of a ship). *kawirtit l-baruwwa* foredeck. *fil-baruwwa* right ahead!

ب ر ى ١
برى *bara*[2] or *bara (i)* /vt/ **1** to trim or sharpen to a point. *ʕibrii-li ɋalam* sharpen me a pencil! **2** to wear down, wear away. *ʕif-fuxl*[i] *bara l-ʕazmiil* the work wore away the chisel. || *ʕil-hamm*[i] *baraa-ni* the worry wore me out. - vn *bary*; ava *baari*; pva *mabri*.
برية *barya* /n pl *-aat*/ **1** /inst n/ a sharpening. **2** sharpened end (e.g., of a pencil).
برو *barwa*[2] **1** /n pl *-aat, baraawi*/ worn-down piece (of soap). **2** /adj invar/ quick-witted.
برّاية *barraaya* /n pl *-aat*/ (pencil) sharpener.
اتبرى *ʕitbara* /vi/ **1** to be trimmed or sharpened to a point. **2** to be worn down, be worn away. *ʕiş-şabun-da b-yitbiri b-surɛa* that kind of soap wears away quickly. || *ʕitbara nuşş*[a] *ɛaql-i* (half my mind is worn away) I'm so worn out I can hardly think. - iva *mitbiri*.
انبرى *ʕinbara* = *ʕitbara*. - *minbiri*.

ب ر ى ٢
بارى *baara* /vt/ to compete with. *ma-ħadd*[i]*-ʃ yibarii fig-gary* no one can compete with him at running, no one can run as fast as he. - vn *mubaraah*; ava *mibaari*.
مباراة *mubaraah* /n pl *mubaraat, mubarayaat*/ competition, contest, match. *fii talat mubarayaat il-ħadd*[i]*-da* there are three matches this Sunday.
اتبارى *ʕitbaara* /vi/ to compete. - ava *mitbaari*.

ب ر ى ٣ see ب ر ء ١: *bara, bari, ʕitbarra, ʕistabra, ʕistibarra*

ب ر ى ٤ see ب ر ء ٢: *baari, bariyya*

ب ر ى د
بريد *biriid* <Fr *bride*> /n/ *[needlew]* bar. *ɛirwa briid* button-hole consisting of a worked bar.

(ب ر ى ز)
باريز *bariiz* /prop n/ Paris. - also *bariis*.
بريزة *bariiza*[1] /n pl *baraayiz*/ ten piastres, ten-piastre coin or note.
بريزة *bariiza*[2], *biriiza* <Fr *prise*> /n pl *baraayiz*/ **1** *[elec]* point, socket. **2** *[plumb]* water outlet.

ب ر ى س
باريس *bariis* /prop n/ Paris. - also *bariiz*.

ب ر ى ك
بوريك *bureek* <T *börek*> /coll n/ small pastries with sweet or savoury filling.
بوريكة *bureeka* /pl *-aat*/ unit noun of *bureek*.

ب ر ى م و
بريمو *biriimu* <It *primo*> /adj invar/ **1** first-class. *ʕakl*[i] *briimu* top-notch food. *sawwaaq biriimu* a first-class driver. — /n/ **2** first dish of a meal (in a restaurant, etc.). **3** *ʕil-biriimu* top prize-winning ticket! (cry of the lottery-ticket seller).

(ب ر ى ه)
بريه *bireeh* <Fr> /n pl *-aat*/ beret.
بريه *bureeh* <poss Fr *bureau*> /n pl *-aat*/ tallboy.

ب ز ب ز
بزبوز *bazbuuz* /n pl *bazabiiz*/ **1** small spout (e.g., on a water jug). **2** small protrusion.
بزبز *bazbiz* /vi/ **1** to exude or emerge in droplets. *fii xurm*[i] *şsayyar il-mayya bi-tbazbiz minnu* there is a small hole from which the water drips. *ʕil-ɛaraq baqa ybazbiz min wiff-u* drops of sweat began to ooze from his face. **2** to put out protuberances. *gism-u bazbiz xaaliş* his whole body has come out in pimples. *farɛ if-fagara bi-ybazbiz* the branch of the tree is putting out buds. - vn *bazbaza*; ava *mibazbiz*.

ب ز ر see ب د ر ٣: *bizr, bizra, bizraaya*

ب ز ر ك
بزرك *bazrak* <P *buzurg*> /n/ *[mus]* name given to E half flat (on the fourth space of the staff).

ب ز ر م –
بزرميط *bazramiiṭ* /adj invar/ **1** of mixed blood, mongrel. **2** chaotic, topsy-turvy. - also *baẓramiiṭ*.

ب ز ز
بزّ *bizz* /n pl *bizaaz*/ **1** any small protuberance or projection (e.g., nipple, stud, bud, knot (in wood)). || *bizz ir-rigl* ankle bone. **2** breast, udder. || *ɛinab bizz (il-ɛanza)* variety of sweet elongated grape. - *bizz il-kalb [bot]* name given to varieties of Zygophyllum, Polygo-

num and Mesembryanthemum. - *gaab il-xabar min bizz umm-u* ≈ he got the news straight from the horse's mouth. - *huwwa lissa mif ʕaarif ṭariiq bizz umm-u* ≈ he's still wet behind the ears. - *huwwa ʃaarib min bizz umm-u↓* ≈ he has great strength and courage.
بزّة *bizza* = *bizz*.
بزّازة *bazzaaza* /n pl *-aat*/ 1 feeding bottle, nursing bottle. 2 teat or nipple of a feeding bottle.

ب ز ق [1]
بزق *bazq* /coll n/ *[agric]* onion sprout(s). ‖ *bazq[i] baʕli* baby onions (sown from seed of ordinary onions and often pickled).
بزقة *bazqa* /unit n, pl *-aat*/ an onion sprout.
بزقاية *bazqaaya* = *bazqa*.

ب ز ق [2]
بزق *bazaq (u)* /vt/ to spit. - vn *bazq*; ava *baaziq*; pva *mabzuuq*.
بزاق *buzaaq* /n/ spittle, saliva.
بزّاقة *bazzaaqa* /n pl *-aat*/ spittoon.
بزّق *bazzaq* /vt/ to spit. - vn *tabziiq*; ava/pva *mibazzaq*.

ب ز ق [3]
بزق *buzuq* <T *bozuk*> /n/ *[mus]* bouzouki.

ب ز ل [1]
بزل *bazl* /n/ *[surg]* tapping, paracentesis. *ʃaalit bazl* trocar and cannula. *bazl id-damm* phlebotomy.
مبزل *mabzal* /n pl *mabaazil*/ opening in a furnace for the removal of ash and cinders.

ب ز ل [2]
بذل *bazal↑ (i)* /vt/: *bazal guhd* (or *guhuud*) to exert effort, take pains. - vn *bazl*; ava *baazil*; pva *mabzuul*.
مباذل *mabaazil* /pl n/ vices.
ابتذال *ʃibtizaal* /n/ indecency, vulgarity.
مبتذل *mubtazal* /adj */ indecent, vulgar.

ب ز ل ت
بازلت *bazalt* <Fr> /n/ basalt.
بازلتي *bazalti* /adj/ of or pertaining to *bazalt*.

ب ز م see ء ب ز ي م: *ʃabziim*

ب ز ن ط see ب ي ز ن ط: *bizanṭi*

ب س see [1] ب ا ص: *bas*

ب س ا ر
بسارة *bisaara* <Copt> /n/ dish of dried broad beans, cooked with spices and herbs, and mashed. - also *buṣaara*.

ب س ب ا س
بسباسة *bisbaasa[1]* (also *bisbaasa hindi)* /n/ mace (spice).

ب س ب ر ت
باسبورت *basaburt* <Engl> /n pl *-aat, -aat*/ passport. - also *basboor*.

ب س ب س
بسبس *basbis* /vi/ 1 to call puss-puss-puss (to a cat). 2 to tell tales, gossip. *kaan bi-ybasbis ʕaleek quddaam ṣaḥbak* he was telling tales about you in front of your friend. - vn *basbasa*; ava *mibasbis*.
بسبس *bisbis* /interj/ sound made in calling to a cat.
بسباسة *bisbaasa[2]* /n pl *basabiis*/ woman given to spitefül gossip.

ب س ب و ر
باسبور *basboor* <Fr *passeport*> /n pl *-aat*/ passport. - also *basaburt*.

ب س ب و س
بسبوسة *basbuusa* /coll n/ sweetmeat of baked semolina, soaked in syrup.

ب س ت ا ل
بستال *bustaal* <Fr *postale*>: *kart[i] bustaal* /pl *kuruut bustaal*/ postcard. *ṣuura kart[i] bustaal* postcard-size photo.

ب س ت ا ن
بستان *bustaan* <P *bustân*> /n pl *basatiin*/ garden.
البساتين *ʃil-basatiin* /prop n/ village to the north of el-Ma'adi, famous for its cemetery.

ب س ت ر
بستر *bastar* <prop n *Pasteur*> /vt/ to pasteurize. - vn *bastara*; ava *mibastar*.
اتبستر *ʃitbastar* /vi/ to be pasteurized. - iva *mitbastar*.

ب س ت ف
بستف *bastif* /vt/ to scold, give (s.o.) a piece of one's mind. - vn *bastafa*; ava/pva *mibastif*.
اتبستف *ʃitbastif* /vi/ to be scolded. - iva *mitbastif*.

ب س ت ل ل
بستلة *bistilla, bastilla* <It *mastella*> /n pl *-aat/* large metal container or kettle for holding liquid.

ب س ت ل ى
بستلية *bastilya* <It *pastiglia*> **1** /coll n/ small sugar candies, pastilles. **2** /unit n, pl *-aat/* a small sugar candy, a pastille.
بستلياية *bastilyaaya* = *bastilya* 2.

ب س ت م
بستم *bistim* <Engl> /n pl *basaatim/* piston. *binz il-bistim* piston ring. - also *bistin*.

ب س ت ن
بستن *bistin* <Engl> /n pl *básaatin/* piston. *binz il-bistin* piston ring. - also *bistim*.

ب س ت ن –
بستنكار *bastanikaar* <P *basta-nigâr*> /n/ *[mus]* mode in Arabic music beginning on B half flat and having E half flat and G flat.

ب س ت و ن
بستونى *bastooni, bastuuni* <It *bastoni*> /n/ clubs (in cards).

ب س ت ى ش
بوستيش *bustiif* <Fr *postiche*> /n pl *-aat/* hair-piece.

ب س ت ى ك
بستيكة *bastiika* <It *pastecca*> /n/ *[naut]* block, snatch block.

ب س ج ى ر
بسجيرى *basajeeri* <It *passeggeri*>: *markib basajeeri* passenger ship.

(ب س خ)
بسخة *basxa*[1] <Copt> /n pl *-aat/* foot of a plough, to which the ploughshare is attached (see Pl.D, 21). - also *baṣxa*.
بسخة *basxa*[2] <Syr> /n/ *[Chr]* service held on each of the four days preceding Good Friday. - also *baṣxa*.

[1] ب س ر
بثر *basr* /coll n, pl *busuur/* pimple(s), spot(s).
بثرة *basra* /unit n, pl *-aat/* a pimple, a spot.

[2] ب س ر
بواسير *bawasiir* /pl n/ *[path]* haemorrhoids, piles.

[3] ب س ر see ب س ا ر: *bisaara*

ب س ر ى
بسارية *bisarya* <perh Gr *psari*> /coll n/ **1** fry of certain Nile fishes, especially the *libiis* (Labeo sp.). **2** sand-smelt.

[1] ب س س
بسّ *bass*[1] *(i)* /vt/ *[cook]* to rub (ingredients) together (in the making of cakes and pastries). - vn *bass, basasaan*; ava *baasis*; pva *mabsuus*.
بسيسة *bisiisa, basiisa* **1** /n/ sweet pastry, based on maize flour. **2** /adj invar/ (accidentally) crumbled or squashed.

[2] ب س س
بثّ *bass*[2] *(i)* /vt/ to instil (into s.o.) inspire (in s.o.). *manaaẓir muxiifa tʕassar fil-ʕaṭfaal wi-tbiss*[i] *fiihum ir-ruɛb* frightful scenes which affect children and fill them with terror. - vn *bass, basasaan*; ava *baasis*; pva *mabsuus*.
اتبثّ *ʕitbass* /vi/ to be instilled (into s.o.), be inspired (in s.o.). - iva *mitbass*.

[3] (ب س س)
بسّ *bass*[3] <P *bas*> **1** /interj/ enough! *bass - wala kilma* enough! not one word more! ‖ *wi-bass* and no more, as in *ɛala qadd*[i] *maqdarit-ha w-bass* according to her means and no more. - *lamma qaal ya bass* to the maximum, as much as possible, as in *qaɛadt aḍrab fii li-ɤaayit lamma qaal ya bass* I beat him till he could take no more, *ʃiribna lamma qulna ya bass* we drank till we could drink no more. **2** /adv/ only, just. *ɛaʃaan xaṭr-ak bass* just for you. *sibuu-ni ʕaxuff*[i] *bass* just let me in. *kunt*[a] *ɛaayiz ʕaɛraf bass* I just wanted to know. *law bass*[a] *ḥadd*[i] *ysaɛid-ni* if only someone would help me. **3** /conj/ but, however. *ruuḥ - bass*[i] *fii farṭ* go! but there's a condition. *ma huwwa mabsuuṭ kida - bass*[i] *ʕana laʕ* well, he's happy like that, but I'm not!
بسّ *buss: ma-fii-ʃ buss*[i] *wala huss* ≈ there are no ifs and buts about it.
بسّ *biss*[1] /interj/ **1** sound made to a cat, usually in order to shoo it away. **2** sound made to attract the attention (e.g., of a waiter).
بسّ *biss*[2]*: ḥiss-ak biss-ak* ≈ just you dare!

[4] ب س س see ب س و س: *basuus*

[1] ب س ط
بسط *basaṭ (i)* /vt/ **1** to give pleasure to, make happy.

laazim il-waaḥid yibsiṭ nafs-u one has to enjoy oneself. *ʔil-lelaa-di nawyiin nibsiṭ-ku* tonight we intend to give you a good time. ‖ *ʔibsiṭ ya ɛamm* there you are, everything is O.K. (said to one whose problem is solved). - *basaṭ ʔaxlaaq-u* it cooled his temper, it brightened his mood. **2**↑ to unfold, spread out. ‖ *basaṭ kaff-u* (he opened his palm) he was charitable. - vn *basṭa*; ava *baasiṭ*; pva *mabsuuṭ*.

باسط *baasiṭ*[1] /n/ Giver of bounty (epithet of God). ‖ *quul ya baasiṭ* ≈ take it easy! don't fret!

مبسوط *mabsuuṭ* /adj */ **1** pleased, content. *ʔintu mabsuṭiin hina* are you happy here? *ʔana mabsuuṭ minnak* I'm pleased with you. **2** exhilarated, high (as a result of drink, drugs etc.). *ʔirib lamma baqa mabsuuṭ* he drank till he had a glow on. **3** well-off, rich. *kaan fallaaḥ bass*[i] *mabsuuṭ* he was a peasant, but comfortably-off.

بسط *basṭ*[1] /n/ numerator of a fraction.

بسطة *basṭa*[1] /n pl *-aat*/ landing (on a staircase).

بساط *busaaṭ* /n pl *ʔabsiṭa*/ **1** carpet. ‖ *ʔil-busaaṭ ʔaḥmadi* ≈ things are quite informal. - *busaaṭ ir-raḥma* large cloth, usually of black velvet marked with a cross, spread out and carried from the corners by four bearers in front of the coffin in Christian funeral processions. **2** floor of a (boxing or wrestling) ring.

بساطة *basaaṭa* /n/ ease, simplicity. *bi-bàsaaṭa* simply, to put it simply.

بسيط *basiiṭ* /adj pl *busaṭa, busaaṭ*/ **1** simple, easy. *ḥa-niɛmil tagriba basiiṭa* we'll make a simple experiment. *ɛaawiz tigaddid ʔiqamt-ak - basiiṭa* you want to renew your residence permit? that's a simple matter. ‖ *ʔil-muʃtarak il-basiiṭ [math]* lowest common denominator. **2** unpretentious, unassuming. *huwwa taagir basiiṭ* he's a small-time trader. *ʔiḥna naas busaṭa* we're simple folk. **3** simple-minded, naive. **4** small (in quantity or extent). *ruʃʃ-à-ha b-kimmiyya basiiṭa min if-farbaat* sprinkle it with a little syrup. *bi-yḥibb*[i] *yitfalsif laakin ɛala basiiṭ* he likes to go in for a little philosophizing. *law giri tibqa garyit-u basiiṭa* even if he does run, he can't run much. **5** slight, insignificant (in intensity). *wagaɛ basiiṭ* a slight pain. — /adv/ **6** to a limited degree, to a small extent. *ma-fii-ʃ ḥadd*[i] *muḥtarif ʔilla basiiṭ* there are only a few professionals. *bi-tiwgaɛ basiiṭ* it hurts a little.

البسيطة *ʔil-basiiṭa*↑ /n/ the earth. *ɛala ḍahr il-basiiṭa* on earth.

اتبسط *ʔitbasaṭ* /vi/ **1** to be or become pleased or content. *ʔiɛmil il-waagib kuwayyis ɛaʃaan il-ʔabla titbisiṭ minnak* do your homework well so that Teacher will be pleased with you. **2** to become exhilarated (as from drink, drugs etc.). **3** to enjoy oneself. *ʔitbasaṭna ḍawi fi-skindiriyya s-sana lli faatit* we had a really good time in Alexandria last year. - ava/iva *mitbisiṭ*.

انبسط *ʔinbasaṭ* = *ʔitbasaṭ*. - vn *ʔinbisaaṭ*; ava *minbisiṭ*.

بسّط *bassaṭ* /vt/ to simplify. - vn *tabsiiṭ*; ava/pva *mibassaṭ*.

اتبسّط *ʔitbassaṭ* /vi/ to be simplified. - iva *mitbassaṭ*.

باسط *baasiṭ*[2] /vt/ to humour (s.o.). *ḍaɛadit tibaṣṭ-u l-ḥadd*[i] *ma waafiḍ ɛal-beeɛa* she sweet-talked him till he agreed to the transaction. - vn *mubaṣṭa*; ava *mibaasiṭ*.

مباسطة *mubaṣṭa* /n/ cordiality, agreeableness, congeniality. *ʔil-mubaṣṭa fil-kalaam* the niceties of conversation. *ma-tḥibb*[i]*-ʃ il-mubaṣṭa* she doesn't like familiarities.

اتباسط *ʔitbaasiṭ* /vi/ **1** to speak pleasantly. *ʔaɛdiin yitbaṣṭu maɛa baɛḍ ʔalabuu-ha gadd* they were having a light-hearted conversation but then became argumentative. **2** to be humoured. - ava/iva *mitbaasiṭ*.

استبسط *ʔistabsaṭ* /vt/ **1** to consider simple or easy. *ma-tistabsaṭ-ʃ il-masaa ʔil biṭ-ṭariiqa di* don't take matters that lightly! **2** to select for easiness or simplicity. *ʔistabsaṭ-lu mas ʔala w-ḥall-a-ha* he picked out an easy (mathematical) problem and solved it. - vn *ʔistibsaaṭ*; ava *mistabsaṭ*.

ب س ط[2]

بوسطة *busṭa*[1] <It *posta*> /n/ **1** mail. *maktab busṭa* post office. *waraqit busṭa* or *ṭaabiɛ busṭa* postage stamp. **2** postal service. *mandubiin min il-busṭa* representatives from the Post Office.

بوسطجي *busṭagi* /n pl *-yya*/ postman, mailman.

ب س ط[3]

بسط *basṭ*[2] /coll n/ reed(s). *ḍalam basṭ* reed pen (as used by calligraphers).

بسط *basṭ*[3] <perh Engl> /n/ paste applied to a razor strop to aid sharpening.

بسطة *basṭa*[2] <It *pasta*> /n pl *-aat*/ an Egyptian sweet similar to a mille-feuille.

بسطة *basṭa*[3]: *basṭit fahm* charcoal ember for igniting the tobacco in a water-pipe.

بسطاية *basṭaaya* = *basṭa*[3].

بسطاوى *basṭaawi* /adj/ pertaining to Tell Basta, near Zagazig. *ḍaff*[i] *basṭaawi* type of stiff straw used in the manufacture of brooms.

بسطة *busṭa*[2] <P *pista*> /n/ small piece of opium or hashish enough for one dose.

ب س ط ر م
بسطرمة *basṭirma* <T *pastırma*> /n/ garlic-and-spice-cured beef.

ب س ق
انبثق *ʔinbasaqˀ* /vi/ to stem, emanate. *lagna nbasaqit min lagna tanya* a committee that grew out of another committee. - vn *ʔinbisaaq*; ava *munbasiq*.

ب س ك ل –
بسكلّتة *biskilitta* <It *bicicletta*> /n pl *-aat*/ bicycle.

ب س ك و ت
بسكوت *baskuut* <It *biscotti*> /coll n/ biscuit(s), cookie(s). - also *baskawiit*.
بسكوتة *baskuuta* /unit n, pl *-aat*/ a biscuit, a cookie. - also *baskawiita*.

ب س ك و ل
بسكول *baskuul* (also *mizaan baskuul*) <Fr *bascule*> /n pl *-aat*/ weighbridge.

ب س ك و –
بسكويت *baskawiit* <Fr *biscuit*> /coll n/ biscuit(s), cookie(s). - also *baskuut*.
بسكويتة *baskawiita* /unit n, pl *-aat*/ a biscuit, a cookie. - also *baskuuta*.
بسكويتاية *baskawitaaya* = *baskawiita*.

ب س ل
باسل *baasil* /adj pl *busala*/ **1** distasteful. ‖*damm-u baasil* he is disagreeable. **2** brave, courageous.

ب س ل ل
بسلّة *bisilla* <It *pisello*> /coll n/ pea(s). *bisillit iz-zuhuur* sweet pea(s).
بسلّاية *bisillaaya* /unit n, pl *-aat*/ a pea.

ب س م [1]
مبسم *mabsam, mabsim* /n pl *mabaasim*/ **1** mouth-piece (of a water-pipe (see Pl.I, 6), wind instrument (see Pl.J, 17 and 19), cigarette-holder etc.). **2** part of rectal syringe which is inserted in the anus.
تبسيمة *tabsiima* /n pl *-aat*/ smile. *ʕaleeha tabsiima tgannin* she has a bewitching smile.
اتبسّم *ʔitbassim* /vi/ to smile. *madd[i] ʔiid-u wi-tbassim* he stretched out his hand and smiled. - ava *mitbassim*.
تبسّم *tabassam: ʔin-nabi tabassam* even the Prophet smiled! (to get a smile from a girl in the street).
ابتسم *ʔibtasam* /vi/ to smile. *ʔizzaay ʕabtisim w-ana fayfaa-k kida* how can I smile seeing you like this? - vn *ʔibtisaam*; ava *mibtisim*.
ابتسامة *ʔibtisaama* /n pl *-aat*/ a smile.

ب س م [2] see ب س ى م : *basiima*

ب س م ل
بسملة *basmala* /n/ name given to the invocation *bi-sm illaah ir-raḥmaan ir-raḥiim* (in the name of God the Compassionate and the Merciful).
بسملّة *bismilla* /interj/ invitation to a guest to begin eating when food is served ≈ please start!
بسمل *basmil* /vi/ to utter the invocation *bi-sm illaah ir-raḥmaan ir-raḥiim* (said before an undertaking). - vn *basmala*; ava *mibasmil*.
اتبسمل *ʔitbasmil* = *basmil*. - ava *mitbasmil*.

ب س ن د –
بسنديده *basandiida* <P *pasandîda*> /n/ *[mus]* mode in Arabic music.

ب س و س
بسوس *basuus* /prop n/ a village in Qalyubiya province, known for the good quality of its *fammaam* melons.

ب س ى م
بسيمة *basiima* /n/ confection like *hariisa*, but harder and with coconut.

ب ش
باش *baʃ-* <T *baş*> prefix, with occupational titles, indicating higher rank (frequently used by way of complimentary hyperbole). *baʃmuhandis* chief engineer. *baʃkaatib* head clerk. *baʃrayyis* (1) foreman. (2) *[naut]* boatswain. *baʃʃawiiʃ* (also *bitʃawiiʃ*) *[obsol]* sergeant-major (in army or police).

ب ش ب ش
بشبش *baʃbiʃ* <perh Copt> **1** /vt/ to sprinkle with water. ‖*rabb-i-na ybaʃbiʃ iṭ-ṭuuba lli taḥt[i] raas-u* (may God soften the stone head-rest under his head) ≈ may God rest his soul. **2** /vi/ to sprout (of plants). - vn *baʃbaʃa*; ava/pva *mibaʃbiʃ*.
اتبشبش *ʔitbaʃbiʃ* /vi/ to be sprinkled with water. - iva *mitbaʃbiʃ*.

ب ش ب و ر
بشبورى *baʃbuuri* <perh T *başpare*> /n/ nozzle. ‖*raffaaṣ baʃbuuri [naut]* kort nozzle.

ب ش ت [1]
بشّت *baʃʃit* **1** /vt/ to make penniless. *miraat-i baʃʃitit-ni if-ʃahr-i-da* my wife finished off all the money I had this month. **2** /vi/ to become penniless. *ʕana mbaʃʃit* I haven't got a penny. - vn *tabʃiit*; ava/pva *mibaʃʃit*.
اتبشّت *ʕitbaʃʃit* /vi/ to be made penniless. - iva *mitbaʃʃit*.

ب ش ت ( ) [2]
بشت *biʃt* /n pl *biʃuut, biʃúta, biʃuuta*/ woollen overgarment of various types, worn by men.
بشت *buʃt* <P *pusht*> /n pl *buʃuut*/ *[coarse, abus]* ≈ sod.

ب ش ت ك
بشتك *baʃtik* /vt/ to adorn with strips of (coloured) cloth. ‖ *miqaʃʃa mbaʃtika* straw broom bound with cloth strips (to prevent fraying). - vn *baʃtaka*; ava/pva *mibaʃtik*.
اتبشتك *ʕitbaʃtik* /vi/ passive of *baʃtik*. - iva *mitbaʃtik*.

ب ش ر [1]
بشرى *buʃra* /n/ **1** good news. **2** money or present given to one who first delivers a piece of good news.
بشارة *biʃaara* /n pl *baʃaayir*/ **1** good omen, portent, augury. **2** money or present given to one who first delivers a piece of good news. **3** *[Chr]* **3a** gospel. *biʃaarit matta* the Gospel according to St. Matthew. **3b** *ʕil-biʃaara* (1) the Annunciation. (2) (the preaching of) the Gospel.
بشاير *baʃaayir* /pl n/ **1** indications. *baʃaayir ir-rabiiʕ* the signs of spring. **2** earliest picked fruit of the season. - /adjectivally/ *ʕinab baʃaayir* earliest grapes.
بشير *baʃiir* /n/ bringer of good tidings. *ʕil-baʃiir* epithet of the Prophet Muhammad.
بشّر *baʃʃar* /vt/ **1** to give good news to. *baʃʃar-ni b-nagaaḥ-i* he announced to me the good news of my success. *ʕallaah yibaʃʃar-ak bil-xeer* may God bring you good news (said to one who has performed a favour). **2** *[Chr]* to evangelize. — /vi/ **3** *[Chr]* to act as a preacher or missionary. *baʃʃar bil-ʕingiil been in-niyaam niyaam* he preached the Gospel among the cannibals. **4** to give the first yield (of a crop). *bi-yistimirr[i] f-numuww-u l-ɤaayit ma ybaʃʃar* it continues growing until it gives its first yield. - vn *tabʃiir*; ava/pva *mibaʃʃar*.
مبشّر *mubaʃʃir* /n */ *[Chr]* missionary.
اتباشر *ʕitbaaʃir[1]* /vi/ to look (upon s.th.) as a good omen, be cheered (by s.th.). *ʕitbaʃirt[i] biiki ṣ-ṣubḥ* it did me good to see you in the morning. - ava *mitbaaʃir*.
استبشر *ʕistabʃar↑* /vi/ to look (upon s.th.) as a good omen, be cheered (by s.th.). *ʕistabʃarna bii (xeer)* we took it as a good sign. - vn *ʕistibʃaar*; ava *mistabʃar*.

ب ش ر [2]
بشر *baʃar[1]* *(u)* /vt/ **1** to flake, shred, grate. *ṣabuun mabʃuur* soap flakes. - vn *baʃr, baʃr*; ava *baaʃir*; pva *mabʃuur, mabʃuur*.
بشرة *baʃara* /n pl *-aat*/ **1a** skin, surface. **1b** complexion. *baʃara duhniyya* an oily complexion. **2** *[text]* finish.
مبشرة *mabʃara* /n pl *mabaaʃir*/ grater.

ب ش ر [3]
بشر *baʃar[2]* /n/ **1** human being. *ʕil-waaḥid barḍu baʃar* after all, one is only human. **2** *ʕil-baʃar* mankind. **3** ↓ *[euphem]* penis.
بشرى *baʃari* /adj/ human. *ḍaḥiyya baʃariyya* human sacrifice. *ḍufdaʕ baʃari* frogman. ‖ *duktoor baʃari* physician.

ب ش ر [4]
باشر *baaʃir* /vt/ **1** to undertake, carry out, perform. *bi-yḥibb[i] ybaaʃir kull[i] ḍaḍiyya b-nafs-u* he likes to handle each case himself. *bi-ybaaʃir ʕamal-u fil-bank* he carries out his job at the bank. *maḥruum min mubaʃrit il-ḥuḍuuḍ is-siyasiyya* deprived of exercising political rights. **2** to supervise. *miʃ ʕawziin ḥadd ybaʃir-na* we don't want anyone to supervise us. - vn *mibaʃra, mubaʃra↑*; ava *mibaaʃir, mubaaʃir↑*; pva *mubaaʃar↑*.
مباشرة *mubaaʃaratan↑* /adv/ directly.
مباشر *mubaaʃir* **1** /n */ supervisor. **2** /adj */ direct. *ʕittiṣaal mubaaʃir* direct communication. *bi-tḥaawil tiʕraf ʕasraar-i b-ṭariiqa ɤeer mubaʃra* she tries to find out my secrets by indirect means. *sabɤaat mubaʃra [text]* direct colours.
اتباشر *ʕitbaaʃir[2]* /vi/ to be supervised. - iva *mitbaaʃir*.

ب ش ر [5] see ب ش و ر : *baʃawra*

ب ش ر ت
بوشرت *buʃirt* <poss Engl *bush shirt*> /n pl *-aat*/ *[mil]* fatigue shirt.

ب ش ر ف
بشرف *baʃraf* <P *pish-rav*> /n pl *baʃaarif*/ *[mus]* instrumental form having a 4/4 signature (and characteristically longer than the *samaaʕi*).

ب ش ر ق
بشرق *baʃraḍ* /vt/ to give (s.o.) a treat (usually by

spending money). *kull[i] baaba ma yzur-na ybaʃraq-na b-ʔirfeen* every time my father comes to visit us he spends money on us generously. ‖*baʃraq ʕenee* to feast one's eyes, give one's eyes a treat. - vn *baʃraqa*; ava/pva *mibaʃraq*.

بشرقة *baʃraqa* /n/ luxury. *ʃin wugid il-ʕeeʃ yibqa l-malḥ[i] baʃraqa [prov]* (if bread is available, then salt is a luxury) ≈ first things first.

اتبشرق *ʃitbaʃraq* /vi/ to treat oneself, spend money freely on pleasure. - ava *mitbaʃraq*.

ب ش ر و ش

بشروش *baʃaroof* <Copt> /coll n/ flamingo(s). ‖*zayy[i] ʕuud il-baʃaroof* very tall and thin.

ب ش ش

بش *baʃʃ (i)* /vi/ to smile, look happy. *saaʕit ma ʃaf-ni baʃʃ[i] f-wiʃʃ-i* as soon as he saw me, his face lit up. - vn *baʃaaʃa, baʃaʃaan*; ava *baaʃiʃ*.

بشوش *baʃuuʃ* /adj/ smiling, genial.

ب ش ع

بشع *biʃiʕ, baʃiʕ[↑]* /adj */ hideous, abominable.

أبشع *ʔabʃaʕ* /el/ more/most hideous or abominable.

بشاعة *baʃaaʕa* /n/ hideousness, frightfulness. *taṣarrufaat-u f-muntaha l-baʃaaʕa* his behaviour is absolutely appalling.

بشّع *baʃʃaʕ* /vi/ to commit outrages. *ʔil-kalb[i] baʃʃaʕ fiihum bi-nyaab-u* the dog savaged them with his fangs.

استبشع *ʔistabʃaʕ* /vt/ to consider hideous or abominable. - vn *ʔistibʃaaʕ*; ava *mistabʃaʕ*.

ب ش ك

بشكة *baʃka* /n/ a type of card game.

ب ش ك ر

بشكر *baʃkar* /vt/ to gut, clean out (a carcass). - vn *baʃkara*; ava/pva *mibaʃkar*.

بشكار *biʃkaar* /n pl *baʃakiir*/ one who cleans out carcasses.

(ب ش ك و ر)

بشكور *baʃkuur* /n pl *baʃakiir*/ long metal rod with a hooked end (used, e.g., by bakers for removing trays from the oven).

بشكورة *baʃkuura* /n/ head of the penis (in animals).

ب ش ك ى ر

بشكير *baʃkiir* <P *pesh-gîr*> /n/ **1** terry cloth, terry towelling. **2** /pl *baʃakiir*/ bath towel.

ب ش ل

بشلة *baʃla* or *biʃla* /n pl *biʃal, biʃlaat/ [non-Cairene]* any small sharp instrument usable as a weapon.

ب ش ل م –

بشلميط *baʃlamiiṭ* /n/ *[joc]* penis.

ب ش ل ى ك

بشليك *baʃliik* <perh T *başlık*> /n pl *baʃaliik*/ neck edging of a galabiya (see Pl.F, 4).

ب ش م [1]

بشم *baʃam (i)* /vt/ to surfeit. *ʔid-dihn[i] b-yibʃim wi-yxalli l-waaḥid ma-yiqdar-ʃ[i] yaakul* fat gives one a feeling of uncomfortable fullness and makes one unable to eat (anything else). - vn *baʃam, baʃamaan*; ava *baaʃim*; pva *mabʃuum*.

بشمان *baʃmaan* /adj */ suffering from a feeling of being full (rich food).

اتبشم *ʔitbaʃam* /vi/ to be surfeited. - iva *mitbiʃim*.

ب ش م [2]

تبشيم *tabʃiim* /n/ riveting.

ب ش م [3] see ب ش ى م : *baʃiima*

ب ش م ل

بشملة *baʃmala* /coll n/ loquat(s).

ب ش م ل ل

بشمل *biʃamill, baʃamill* <Fr> /n/ bechamel sauce.

بشملة *biʃamilla, baʃamilla = biʃamill*.

ب ش ن س

بشنس *baʃans* <Copt> /n/ the ninth month of the Coptic year (9 May to 7 June). *baʃans[i] b-yiknis il-beet* (or *il-ʔarḍ[i]*) *kans* Bashans sweeps the house (or ground) clean (because stores run out prior to the next harvest).

ب ش ن ق

بشنق *baʃnaq* /vt/ to wrap or veil (the head or neck). ***baʃnaqit*** *wiʃʃ-a-ha biṭ-ṭarḥa* she covered her face with the veil. - vn *baʃnaqa*; ava/pva *mibaʃnaq*.

بشنيقة *buʃneeqa* /n pl *baʃaniiq, buʃneqaat*/ muffler, scarf, head-veil.

اتبشنق *ʔitbaʃnaq* /vi/ to be wrapped or veiled (of the head or neck). - iva *mitbaʃnaq*.

ب ش ن ن

بشنين *baʃniin* <perh Copt> /coll n/ lotus(es).

بشنينة *baʃniina* /unit n, pl *-aat*/ a lotus.
بشنن *baʃnin* /vi/ to expand or freshen up as a result of soaking in water. *ḥuṭṭi l-baqduunis fi-mayya ɛaʃaan yibaʃnin* put the parsley in water to freshen it up. *ʃaxad duff*[i] *w-ṭiliɛ wi-wiff-u mbaʃnin* he took a shower and came out with his face glowing. - vn *baʃnana*; ava *mibaʃnin*.
اتبشنن *ʃitbaʃnin* = *baʃnin*. - ava *mitbaʃnin*.

ب ش و ر
بشورة *baʃawra* <T *paçavra*> /n pl *-aat*/ blackboard duster, chalk eraser.

ب ش ى م
بشيمة *baʃiima*↓ /n pl *baʃaayim*/ after-birth (of animals). - also *maʃiima*.

ب ص ا ر
بصارة *buṣaara* <Copt> /n/ dish of dried broad beans, cooked with spices and herbs and mashed. - also *bisaara*.

ب ص ب ص [1]
بصبص *baṣbaṣ* /vi/ to ogle, make eyes, leer (often with accompanying suggestive remarks). *w-ana b-abaṣbaṣ liz-zabaayin wi-ʃeeh yaɛni* so I make eyes at the customers, what of it? - vn *baṣbaṣa*; ava *mibaṣbaṣ*.
بصباص *biṣbaaṣ* /adj */ flirtatious (usually of men).
بصبوص *baṣbuuṣ*[1] /n pl *baṣabiiṣ*/ (male) flirt.
مبصبصاتى *mibaṣbaṣaati* /n pl *-yya*/ flirt.
اتبصبص *ʃitbaṣbaṣ* /vi/ **1** (impersonal) passive of *baṣbaṣ*. *ʃana miʃ min illi b-yitbaṣbaṣ luhum* I'm not the type to put up with people making eyes at me. **2** to look around furtively. *maaʃi b-titbaṣbaṣ ɛala ʃeeh* what are you sneaking around looking for? - ava/iva *mitbaṣbaṣ*.

ب ص ب ص [2]
بصبوص *baṣbuuṣ*[2] (also *baṣbuuṣ wilɛa*) /n pl *baṣabiiṣ*/ ember.
بصبوصة *baṣbuuṣa* = *baṣbuuṣ*.
بصبوصاية *baṣbuṣaaya* = *baṣbuuṣ*.

(ب ص خ)
بصخة *baṣxa*[1] <Copt> /n pl *-aat*/ foot of a plough, to which the ploughshare is attached (see Pl.D, 21). - also *basxa*.
بصخة *baṣxa*[2] <Syr> /n/ *[Chr]* service held on each of the four days preceding Good Friday. - also *basxa*.

ب ص ر [1]
بصر *baṣar* /n/ vision, sight.
بصريّات *baṣariyyaat*↑ /pl n/ optics.
بصير *baṣiir* /adj */ **1** endowed with sight, sighted. *ʃil-ɛeen baṣiira wil-yadd*[i] *qaṣiira [prov]* ≈ the spirit is willing but the flesh is weak. *ʃil-ɣariib ʃaɛma wa-law kaan baṣiir [prov]* ≈ a stranger is always to be excused his ignorance of foreign customs. **2** clear-sighted, discerning. — /n/ **3** Discerning One (epithet of God).
بصيرة *baṣiira: ʃiʃ-ʃakwa l-ʃahl il-baṣiira ɛeeb [prov]* complaint to the perspicacious is unseemly.
أبصر *ʃabṣar* (also *ʃaṣbar*) /part/ who knows?, one wonders. *ʃabṣar raaḥu feen* one wonders where they have gone. *huwwa miʃ gayy*[i] *ʃilla bukra.* - *wi-ʃabṣar (yiigi)* 'He's not coming before tomorrow.' 'Who knows (whether he'll come or not).' ‖ *wi-ʃabṣar ʃeeh* and what not, as in *ʃiribna ʃaay wi-qahwa w-ʃabṣar ʃeeh* we drank tea, coffee and what not. - *ʃabṣar wi-m-adrik* so on and so forth, as in *yiquulu taɛaalu w-ʃabṣar wi-m-adrik* they say 'come' and so on and so forth.
إبصار *ʃibṣaar*↑ /n/ sight. ‖ *zugaag ʃibṣaar* optical glass.
اتباصر *ʃitbaaṣar* /vi/ to look around, search. *ʃil-waaḥid laazim yitbaṣar-lu f-qirfeen ɛaʃaan maṣariif il-madrasa* one has to get hold of some money for school expenses. - ava *mitbaaṣir*.

ب ص ر [2]
بصرة *baṣra* /n/ **1** an Egyptian game (known also as *koomi* and *ʃil-waad yiquff*) played by two to four persons; cards are dealt in fours, jack and seven of diamonds take all, and single cards can be taken by their equivalents in other suits. — /pl *baṣaari, buṣar*/ **2** taking of a card by its equivalent in another suit in the game of *baṣra*, or the cards so taken. **3** gain swiftly snatched.
بصّر *baṣṣar* /vi/ **1** to take a card with its equivalent in another suit in the game of *baṣra*. **2** to land a profitable deal. - vn *tabṣiir*; ava *mibaṣṣar*.

ب ص ر [3] see ب ص ا ر : *buṣaara*

ب ص ص [1]
بصّ *baṣṣ (u)* /vi/ **1** to look. *buṣṣ-i-li* look at me! *baṣṣ*[i] *f-saɛt-u* he looked at his watch. *baṣṣeet ʃimaal wi-yimiin* I looked left and right. *ʃil-ʃooḍa di bi-tbuṣṣ*[a] *ɛala ʃeeh* what does this room look out on? *ḥ-abuṣṣ*[a] *ɛaleek min il-balakoona* I'll watch you from the balcony. **2** /always followed by *laaqa*/ modal of (sudden) awareness. *baṣṣeet laqeet il-baab xabbaṭ* (suddenly) I heard a knock at the door. *baṣṣ*[i] *laaqa f-ʃiid-u qirfeen ṭayyibiin* he realized that he had (accumulated) a good sum of

money. *kamaan sana ʃaw sanateen ḫa-tbuṣṣ^{i} tlaaqi ʃibn-ak kibir wi-baqa raagil* after a year or two you'll find your son has grown up and become a man. - vn *baṣṣ, baṣaṣaan*; ava *baaṣiṣ*.

¶ *baṣṣ^{i} li-* (1) to consider, give consideration to. *buṣṣ^{i} lil-mustaqbal* think about the future. *baṣṣeet li-nafs-i min guwwa ṣiʕibt^{a} ʕala nafs-i* I had a good think about the condition I was in and felt sorry for myself. (2) to envy, strive to be like (s.o.). *dayman bi-ybuṣṣ^{i} li-wlaad ʕamm-u* he' always envious of his cousins. *ʃilli ybuṣṣ^{i} lin-naas yitʕab [prov]* emulating others (out of envy) wears you out.

بصّة *baṣṣa^{1}* /inst n, pl *-aat*/ a glance, a look.

بصّاص *baṣṣaaṣ* /n * and pl *baṣṣaaṣa*/ *[obsol]* spy, snooper.

اتبصّص *ʃitbaṣṣaṣ* /vi/ **1** to look around furtively. *tilaqii dayman maaʃi yitbaṣṣaṣ* you always find him going along looking stealthily about him. **2** to search. *ruuḫ itbaṣṣaṣ ʕaleehum* go along and look for them!

ب ص ص ^{2}

بصّة *baṣṣa^{2}* /n pl *-aat*/ ember of charcoal (especially as fuel for a water-pipe).

بصّاية *baṣṣaaya* /n pl *-aat*/ = *baṣṣa^{2}*.

ب ص ط و م

بصطوم *baṣṭuum* <It *bastone*> /n/ wooden ornamental moulding along edges of a ceiling, in corners, on columns etc.

ب ص ل ^{1}

بصل *baṣal* /coll n/ **1** onion(s). *baṣal ʃaxḍar* spring onions. ‖*zaraʕ-u zarʕ^{i} baṣal* (1) he caused him to fall. (2) he brought about his downfall. - *bi-yimʃi zarʕ^{i} baṣal* ≈ he's dead drunk. - *yoom ʕasal wi-yoom baṣal* ≈ some days are good, some bad. - *baṣal bi-xamsa wi-b-xamsa baṣal* ≈ six of one and half-a-dozen of other. **2** (plant) bulb(s). **3** tuberose(s).

بصلة *baṣala* /unit n, pl *-aat*/ **1** an onion. ‖*ya daaxil been il-baṣala w-qifrit-ha ma-yfuḫ-ʃ^{i} ʕaleek ʃilla ṣunanit-ha [prov]* (you who push your nose between the onion and its skin, all you'll get will be its nasty smell) ≈ keep your nose out of other people's business. - *baṣalit il-muḫibb^{i} xaruuf [prov]* ≈ a posy from the beloved is a ruby. - *ma-yiswaa-ʃ baṣala* he' worthless. - *ṭaaṭi l-baṣala* put your head down! - *yiṣuum wi-yifṭar ʕala baṣala* see *ṣaam*. — /pl *ʃabṣaal*/ **2** a plant bulb. **3** a tuberose.

بصلي *baṣali* /adj invar/ pale golden-brown in colour.

بصيلة *buṣeela↑* /n pl *-aat/ [anat]* bulb of the hair.

ب ص ل ^{2}

بوصلة *buṣla* <It *bussola*> /n pl *-aat, buṣal*/ navigational compass.

ب ص م

بصم *baṣam (u)* /vt/ **1** to imprint, stamp. **2** to put one's finger-prints on (a document, in lieu of signing). *huwwa min illi b-yubṣumu* he's illiterate. ‖*baṣam bil-ʕaʃara* to be in complete agreement. - vn *baṣm*; ava *baaṣim*; pva *mabṣuum*.

بصمة *baṣma* <T *basma*> /n pl *-aat*/ **1** impression (of a stamp, seal etc.). **2** finger-print.

بصمجي *baṣmagi* /n pl *-yya*/ a yes-man.

اتبصم *ʃitbaṣam* /vi/ **1** to be imprinted or stamped. **2** to be marked with a finger-print (in lieu of a signature, of a document). - iva *mitbiṣim*.

ب ص و ن

بصون *baṣoon* <perh Fr> /n/ bassoon.

ب ص ي

باصة *baaṣa^{1}* <Engl> /n pl *-aat/ [soccer]* pass.

باصى *baaṣa^{2}* /vt/ *[soccer]* to pass (a ball). ‖*ḫ-abaaṣi z-zibuun da liik* I'll pass this customer on to you. - vn *mibaṣiyya*; ava/pva *mibaaṣi*.

اتباصى *ʃitbaaṣa* /vi/ *[soccer]* to be passed (of a ball). - iva *mitbaaṣi*.

ب ض ع ^{1}

بضاعة *biḍaaʕa* /coll n/ **1** goods, merchandise. *qaṭr^{i} bḍaaʕa* goods train, freight train. *markib biḍaaʕa* freighter. *ḫusn is-suuq wala ḫusn il-biḍaaʕa [prov]* a good market is more profitable than having good merchandise. *biḍaaʕa win-naas gawaaʕa* (supplies when the people are hungry) fulfilment of a crying need. **2** (mental) resources. *biḍaʕt-u qlayyila* he has little information to offer (of a scholar). ‖*biḍaʕt-u xilṣit* he can't think of any more lying tales to tell.

بضايع *baḍaayiʕ* /pl n/ merchandise.

بضّع *baḍḍaʕ* **1** /vt/ to shop for. *nazla ʕala s-suuq ʃabaḍḍaʕ fiwayyit ḫagaat* I'm going down to the market to shop for a few things. — /vi/ **2** to go shopping. **3** to prosper. - vn *tabḍiiʕ*; ava *mibaḍḍaʕ*.

ب ض ع ^{2}

مبضع *mibḍaʕ↑* /n pl *mabaaḍiʕ*/ scalpel, dissecting knife.

ب ط ا س
بوطاس *buṭaas, biṭaas* <Fr *potasse*> /n/ **1** potash. **2** lye. ‖*buṭaas ʕamrikaani* a stain remover made of lye. - also *butaas*.

ب ط ا ط ا
بطاطا *baṭaaṭa* <prob It *batata*> /coll n/ **1** sweet potato(es). **2** /unit n, pl *-aat*/ a sweet potato.
بطاطاية *baṭaṭaaya* /unit n, pl *-aat*/ a sweet potato.

ب ط ا ط س
بطاطس *baṭaaṭis* <poss T *patates* from Gr or It> /coll n/ potato(es).
بطاطسة *baṭaṭsa* /unit n, pl *-aat*/ a potato.
بطاطساية *baṭaṭsaaya* /unit n, pl *-aat*/ a potato.

ب ط ا ق
بطاقة *biṭaaqa* <prob Gr *pittakion*> /n pl *-aat, baṭaayiq*↓/ card. *biṭaaqa faxṣiyya* personal identity card. *biṭaaqit tamwiin* ration book. *biṭaaqa ntixabiyya* ballot paper.

ب ط ء
بطى *biṭi, biṭa*↓ *(i)* /vi/ to take (too) long. *ʕil-qaṭr*^{i} *biṭi* the train was long behind schedule. *biṭyu fiʃ-ʃuɣl* they were very late with the work. *daxalit il-beet biṭyit ɛalayya* she went into the house and left me waiting ages. - vn *baṭayaan*; ava *baaṭi*.
بطء *buṭʕ*↑ /n/ slowness, tardiness. *bi-buṭʕ* slowly.
بطيء *baṭiiʕ* /adj * and pl *buṭaʕa, buṭaaʕ*/ slow. ‖*ʕin-naqil il-baṭiiʕ* unmotorized transport.
بطّى *baṭṭa*^{1} /vt/ to cause to take too long or be too slow. *miʃ ɛaarif ʕeeh illi baṭṭaa barra* I don't know what kept him out so long. - ava *mibaṭṭi*.
اتبطّى *ʕitbaṭṭa* /vi/ to be delayed. - iva *mitbaṭṭi*.
استبطى *ʕistabṭa* /vt/ to consider slow. *ʕistabṭu ʕaxuu-hum xaragu ynaduu* they thought they had waited too long for their brother so they went out to call him. - vn *ʕistibṭa*; ava *mistabṭi*.

ب ط ب ط ^{1}
بطبط *baṭbaṭ*^{1} **1** /vt/ to flatten, squash. *ʕil-qaṭr*^{i} *miʃi ɛal-musmaar baṭbaṭ-u* the train ran over the nail and squashed it flat. **2** /vi/ to become fat and flabby. - vn *baṭbaṭa*; ava/pva *mibaṭbaṭ*.
اتبطبط *ʕitbaṭbaṭ* /vi/ **1** to become fat and flabby. *ʕitbaṭbaṭit fil-ɛizz* she has grown fat from living a life of ease. **2** to be flattened. - ava *mitbaṭbaṭ*.

ب ط ب ط ^{2}
بطبط *baṭbaṭ*^{2} /vt. and vi/ to splash about (in shallow water). *baṭbaṭ riglee fil-mayya* he kicked about in the water. - also *balbaṭ*. - vn *baṭbaṭa*; ava/pva *mibaṭbaṭ*.

ب ط ح
بطح *baṭaḥ (a)* /vt/ to inflict a wound on (s.o., especially on the head or other bony part of the body). *rukbit-i mabṭuuḥa* my knee is grazed. *baṭaḥ nafuux il-ḥakam* he gashed the referee's head. ‖*ma-ḥadd*^{i} *baṭaḥ-ni veer iz-zaman wi-ɛyaal-i* ≈ I'd be a happy man but for the way life and my children treat me. - vn *baṭḥ*; ava *baaṭiḥ*; pva *mabṭuuḥ*.
بطحة *baṭḥa* /n pl *-aat*/ **1** /inst n/ a wound, a graze (especially on the head or other bony part of the body). *ʕilli ɛala raas-u baṭḥa yḥassis ɛaleeha [prov]* (he who has a head wound keeps feeling it) ≈ a guilty person will always give himself away. ‖*baṭḥit if-fams* sunstroke. **2** *baṭḥit raas* poll.
بطحجى *baṭaḥgi* /n pl *-yya*/ bully, thug.
اتبطح *ʕitbaṭaḥ* /vi/ to be wounded or grazed (of, or on, the head or other bony part of the body). - iva *mitbiṭiḥ*.
انبطح *ʕinbaṭaḥ* = *ʕitbaṭaḥ*. - iva *minbiṭiḥ*.
بطّح *baṭṭaḥ* **1** /vt/ to attack viciously. **2** /vi/ to get out of control. - vn *tabṭiiḥ*; ava *mibaṭṭaḥ*.

ب ط خ
بطّيخ *baṭṭiix* /coll n/ water-melon(s). *yiḍrab il-ʕarḍ*^{i} *yṭallaɛ baṭṭiix* ≈ he can perform miracles.
بطّيخة *baṭṭiixa* /n pl *-aat*/ **1** /unit n/ a water-melon. ‖*baṭṭiixa ɑarɛa* a water-melon the flesh of which is white and tasteless. - *zayy il-baṭṭiixa l-maɑfuula* a matter of luck. - *ḥuṭṭ*^{i} *f-baṭn-ak baṭṭiixa ṣeefi [prov]* (put a summer melon in your belly) ≈ relax, don't worry about a thing. - *bargal baṭṭiixa* external calipers. **2** pommel (of a saddle). **3** hub of a cart-wheel.

ب ط ر ^{1}
بطران *baṭraan* /n */ one who is arrogantly ungrateful. *ʕil-baṭraan nadmaan [prov]* one who has an arrogantly ungrateful attitude towards God's gifts will live to regret it (because they will be withdrawn).
بطر *baṭar* /n/ arrogant and wasteful attitude towards gifts or blessings.
اتبطّر *ʕitbaṭṭar* /vi/ to be ungrateful to the point of ridiculing gifts. - ava *mitbaṭṭar*.

ب ط ر ^{2}
بيطار *biṭaar* /n pl *bayaṭra*/ **1** *[obsol]* farrier. **2** veterinarian.
بيطرى *biṭari* /adj */ veterinary. *ṭibb*^{i} *biṭari* veterinary medicine. *duktuur biṭari* veterinary surgeon.

³ ب ط ر see ب ط ط ر ى : *baṭṭariyya*

⁴ ب ط ر see ء م ب ر – : *ʔabaṭra*

¹ ب ط ر خ
بطارخ *baṭaarix* /n/ cured salted roe of the grey mullet, botargo.
بطروخ *baṭruux* /n, pl *baṭariix*/ roe (of any type of fish).
بطرخ *baṭrax* /vi/ to be swollen (with, or as if with, roe). *baɛd[i] ma ʃtaɣal fit-tigaara maḫfaẓt-u baṭraxit* after he worked in commerce, his wallet bulged. - vn *baṭraxa*; ava *mibaṭrax*.

² ب ط ر خ see ب ط ر ك : *baṭraxaana*

ب ط ر س
بطرس *buṭrus* male given name. *buṭrus ir-rasuul* the Apostle Peter.
البطرسيّة *ʔil-buṭrusiyya* (also *ʔil-kiniisa l-buṭrusiyya*) /n/ Coptic Orthodox church in Abbasiya.

– ب ط ر ش
بطرشيل *baṭarʃiil* <Gr *epitrakhêlios*> /n/ *[Chr]* stole (of a priest).

ب ط ر ك
بطرك *baṭrak* <Gr *patriarkhês*> /n pl *baṭarka*/ *[Chr]* patriarch.
بطركيّة *baṭrakiyya* /n/ *[Chr]*. patriarchate. - also *baṭriyakiyya, baṭriyarkiyya*.
بطركخانة، بطرخانة *baṭraxaana* <prob T *patrikhane*> /n/ *[Chr]* patriarchate.

– ب ط ر م
بطرمان *baṭramaan* <*Martaban* (in Burma)> /n pl *-aat, -aat*/ glass or plastic jar with lid, jam jar. - also *barṭamaan*.
بطرمانة *baṭramaana* = *baṭramaan*. - also *baṭramaana*.

ب ط ر ى ك
بطريكيّة *baṭriyakiyya* /n/ *[Chr]* patriarchate. - also *baṭrakiyya, baṭriyakiyya*.

– ب ط ر ى
بطريركيّة *baṭriyarkiyya* <Gr *patriarkheio*> /n/ *[Chr]* patriarchate. - also *baṭrakiyya, baṭriyakiyya*.

¹ ب ط س see ب ا ط س : *baaṭis*

² ب ط س see ب ط و س : *baṭuus*

ب ط س ت
باتيستة *baṭista* <It> /n/ cambric, batiste.

¹ ب ط ش
بطش *baṭaʃ[1] (u)* **1** /vt/ to strike, smash. *ʔiṭ-ṭuuba baṭaʃit manaxiir-u* the stone struck his nose. **2** /vi/ to collide. *kaan maaʃi fiḍ-ḍalma ɋaam baṭaʃ fil-ḥeeṭa* he was walking in the dark when he collided with the wall. - vn *baṭaʃaan*; ava *baaṭiʃ*; pva *mabṭuuʃ*.
مبطوش *mabṭuuʃ* /adj/ squashed-looking. *manaxiir mabṭuuʃa* broad flat nose.
اتبطش *ʔitbaṭaʃ[1]* /vi/ **1** to crash, collide. *wiqiɛ itbaṭaʃ fil-ʔarḍ* he fell crashing to the ground. **2** to be stuck, be smashed. - ava/iva *mitbiṭiʃ*.
بطّش *baṭṭaʃ[1]* /vi/ to thrash about, strike out wildly. *ʔahu yinzil yibaṭṭaʃ fil-mayya w-xalaaṣ* well, he goes into the water and just splashes about a bit. - vn *tabṭiiʃ*; ava *mibaṭṭaʃ*.

² ب ط ش
بطش *baṭaʃ[2] (u)* /vt and vi/ to stain. *ʔil-buuya baṭaʃit (ɋala) hiduum-i* the paint stained my clothes. - vn *baṭaʃaan*; ava *baaṭiʃ*; pva *mabṭuuʃ*.
بطشة *buṭʃa* /n pl *buṭaʃ*/ stain, imprint.
اتبطش *ʔitbaṭaʃ[2]* /vi/ to be stained. - iva *mitbiṭiʃ*.
بطّش *baṭṭaʃ[2]* /vi/ to become streaky (of coloured cloth). - *tabṭiiʃ*; ava *mitbaṭṭaʃ*.

³ ب ط ش
بطّش *baṭṭaʃ[3]* /vi/ to lose shape, become flabby. *ʔil-gizam bitaaɛit il-ʔayyam-di faḥr[i] waaḥid wi-tbaṭṭaʃ* shoes these days lose their shape after a month. - vn *tabṭiiʃ*; ava *mibaṭṭaʃ*.

⁴ (ب ط ش)
بطش *baṭʃ* /n/ veal.
بوطشة *buṭʃa* /n pl *buṭaʃ*/ barrel.

¹ ب ط ط
بطّ *baṭṭ[1] (u)* /vt/ **1** to flatten out. *xudi l-ɋagiina di buṭṭii-ha* take this piece of dough and flatten it. **2** to push (s.o.) into a sitting position. *ruḥt[i] baṭṭ-u ɋal-kursi* I shoved him down onto the chair. **3** to cause a setback to (s.o.). *rabb-i-na baṭṭ-u* ≈ he failed to get what he wanted. - vn *baṭṭ, baṭaṭaan*; ava *baaṭiṭ*; pva *mabṭuuṭ*.
اتبطّ *ʔitbaṭṭ* /vi/ **1** to be or become flattened out. **2** to take a tumble. **3** to plump down into a sitting position. - ava/iva *mitbaṭṭ*.
انبطّ *ʔinbaṭṭ* = *ʔitbaṭṭ*. - ava/iva *minbaṭṭ*.
بطّط *baṭṭaṭ* /vt/ to flatten out (thoroughly, or with a

number of movements, or a number of things). *ʔil-ɋaṭr^{i} baṭṭaṭ-u* the train squashed him flat. ‖*sagaayir mibaṭṭaṭa* oval cigarettes. -*samak mibaṭṭaṭ* flatfish. -vn *tabṭiiṭ*; ava/pva *mibaṭṭaṭ*.

تبطيطة *tabṭiiṭa* /n/ instance noun of *tabṭiiṭ*.

اتبطّط *ʔitbaṭṭaṭ* /vi/ to be flattened, be flattened out. -iva *mitbaṭṭaṭ*.

ب ط ط [2]

بطّ *baṭṭ*[2] /coll n/ duck(s). ‖*ʔilli kalt-u wizz^{i} wizz^{i} ḫa-tʃuxx-u baṭṭ^{i} baṭṭ [prov]* ≈ what you enjoy (to excess) today you will suffer for, or pay for, tomorrow.

بطّة *baṭṭa*[2] /n pl *-aat*/ **1** /unit n/ a duck. ‖*ʔakl-ik mineen ya baṭṭa* ≈ (it looks so good) I don't know where to start. **2** plump and pretty girl. **3a** affectionate form of address ≈ dear. **3b** nickname for *faṭma*.

بطّاية *baṭṭaaya* /unit n, pl *-aat*/ a duck.

ب ط ط [3]

بطّ *buṭṭ* <Engl> /n pl *-aat*/ small sailing boat.

ب ط ط ر ي

بطّاريّة *baṭṭariyya* <It *batteria*> /n pl *-aat*/ **1** *[elec]* battery. **2** torch, flashlight. **3** *[mil]* battery (of artillery). **4** array, assemblage (of machinery).

ب ط ق see ب ط ا ق : *biṭaaɋa*

ب ط ل [1]

بطل *baṭal^{i}↑ (a)* /vi/ to be annulled, become void or invalid. *ʔitkallim fa-ṣalaat-u baṭalit [Isl]* he spoke (while praying) and so his prayer became invalid. *ʔil-beeɛ baaṭil* the transaction is not valid. -vn *buṭlaan*; ava *baaṭil*.

بطل *biṭil (a)* /vi/ **1** to become exhausted. *ʔid-dawa da mafɛuul-u biṭil* this medicine has become ineffective. *miʃ ɛarfa leeh il-ʔayyam-di baɋeet ʔabṭal bi-surɛa* I don't know why I get tired so quickly these days. **2** to go out of fashion, become obsolete. *ʔil-mooḍa di biṭlit min zamaan* this fashion has been out of date for a long time. **3** to become void or invalid. -vn *baṭal, baṭalaan*; ava *baṭlaan, baaṭil*.

باطل *baaṭil* /n/ falsehood, deception, that which is not valid. *ʔil-baaṭil ma-luu-ʃ rigleen [prov]* falsehood has no leg(s) to stand on. *ḫa-ydafɛu ɛannu bil-baaṭil* they will put up a false defence for him. *ʔimsik il-baaṭil ɛala ma ygii-lak il-ḫaɋɋ [prov]* fight for more than your right and you will end up by getting what is rightfully yours. ‖*bi-ynaahid fil-baaṭil* (or *bil-baaṭil*) ≈ he is fighting a lost battle. -*ma-ɛrift^{i}-ʃ ʔaaxud maɛaaha ḫaɋɋ^{i} wala baaṭil* I couldn't get anywhere with her no matter what method I tried. -*ɛaaṭil ɛala baaṭil* ≈ incessantly and to no purpose. -*ʔil-ɛaaṭil fil-baaṭil* ≈ all and sundry, without discrimination, as in *ga l-buliiṣ xad-hum ɛaṭil-hum fi-baṭil-hum* the police came and took them all in.

الباطليّة *ʔil-baṭliyya*↓ /prop n/ populous area in Cairo between the Citadel and el-Azhar, known for its trade in drugs and hashish. -also *ʔil-baṭniyya*.

بطالة *biṭaala* /n/ **1** idleness, inactivity, unemployment. *faydit ʔayyaam il-biṭaala n-noom [prov]* (the benefit of days of idleness is sleep) the only relief when times are bad is sleep. **2** day off, day of leisure.

بطّال *baṭṭaal* /adj */ **1a** idle. *ʔil-ʔiid il-baṭṭaala nigsa [prov]* the idle hand is unclean. *ʔiɛmil bi-xamsa w-ḫaasib il-baṭṭaal [prov]* (work for five (piastres) and ask the idle man how much he has earned) no matter how little you earn, it will still be more than the idle man earns. ‖*ɛammaal ɛala baṭṭaal* incessantly and to no purpose, as in *ʔikkallim ɛammaal ɛala baṭṭaal* he kept up a steady stream of pointless nonsense. **1b** *[agric]* fallow. *ʔin-naḫya l-baṭṭaala* the unplanted side (of a field, furrow). **2** bad, wicked, depraved. *raagil baṭṭaal* a bad man. -/adverbially/ *miʃi baṭṭaal* he behaved badly. ‖*baḥr^{i} baṭṭaal* a choppy sea. -*ʔibɛid-na ɛan kull^{i} baṭṭaal* keep us from all evil.

¶ *miʃ baṭṭaal* not bad, tolerably good. *ʔil-imtiḫaan ma-kan-ʃ^{i} baṭṭaal* the exam wasn't bad. *ʔizzayy^{i} ṣiḥḥit-ak. - miʃ baṭṭaala* 'How's your health?' 'Not bad.'

بطّل *baṭṭal* /vt/ **1** to put a stop to, render inactive. *baṭṭal il-mutoor* switch off the engine! **2** to put an end to, give up. *miʃ ḫa-tbaṭṭali mnaɋra* won't you stop quarrelling? *baṭṭalt it-tadxiin min sana* I stopped smoking a year ago. ‖*baṭṭaluu-da wi-smaɛuu-da* ≈ whatever next! the things that go on! — /vi/ **3** to stop, become inactive. *ɛafaan il-ɛarabiyya ma-tbaṭṭal-ʃ^{i} minni* so that the car won't pack up on me. -vn *tabṭiil*; ava/pva *mibaṭṭal*.

¶ *baṭṭal ɛala* to supplant, supersede. *ḫ-aftaḥ-lu maḥall^{i} ybaṭṭal ɛalee* I'll open a shop that will put him out of business.

ب ط ل [2]

بطل *baṭal*[2] /n pl *ʔabṭaal*/ **1** hero. ‖*ʔil-baṭal ir-rumaani* epithet of St. George (*maari girgis*). **2** champion. **3** principal character (in a story, film etc.). *baṭal il-film* the star of the film. — /adj/ **4** courageous, brave.

بطلة *baṭala* /n pl *-aat*/ heroine.

بطولة *buṭuula* /n/ **1** heroism. *ʔil-buṭuula fil-ḫarb^{i} b-tixtilif min ʔinsaan li-ʔaaxar* heroism in war differs from one man to the next. — /pl *-aat*/ **2** act of heroism. *ʔil-muraasil il-ḫarbi miʃ bass^{i} ysaggil il-buṭulaat* the war

correspondent does not only record heroic deeds. **3** championship. *bi-yaxdu fluus gawaayiz fil-buṭulaat* they get prize money in the championships. **4** leading role, starring part (in a play, film etc.).

ب ط م

بطمة *baṭama* /n/ *[obsol]* stage in shoemaking entailing the stitching of a reinforcing strip of leather to the upper before it is sewn to the sole.

ب ط ن

بطن *baṭn* /fem n, pl *biṭuun, buṭuun*/ **1** abdomen, abdominal region or any specific part thereof. *baṭn-i b-tiwgaʕ-ni* I have stomach-ache. *saaʕit il-biṭuun tituuh il-ʕuquul [prov]* when it's time to eat, minds wander. *ħamm-ak ʕala baṭn-ak* you think only of your belly. *ħassit bi-ħarakit ig-ganiin fi-baṭn-a-ha* she felt the baby moving inside her. *naamu ʕala laħm[i] baṭn-u-hum* they went to bed hungry. ‖*baṭn-i maʃya* (1) my bowels are moving. (2) I have diarrhoea. -*xallaa-ha baṭn[i] ħmaar* he went to excess. -*baṭn-i karkibit* my heart sank. -*baṭn-u wasʕa* he's unscrupulous. **2a** young brought forth at a (single) birth. *dool mawludiin fi-baṭn[i] waħda* those are twins (or triplets etc.). *baʕd[i] wlaadit ʃawwil baṭn* after the birth of the first child. **2b** crop yield. *bi-naaxud baṭneen min il-barsiim wi-baʕdeen nizraʕ il-ʕamḥ* we get a double crop of clover before we plant the wheat. **3** inner or innermost part. *fi-baṭn il-ʕumaaʃ* right inside the material. ‖*baṭn il-ʃiid* palm of the hand. -*baṭn ir-rigl* or *baṭn il-ʕadam* sole of the foot. -*baṭn il-waadi* the bottom of the valley. -*baṭn il-baḥr* low gradient of the river embankment.

بطنيّة *baṭniyya* /n/ **1** inner face. **2** *[arch]* underside (e.g., of an arch).

بطنى *biṭani* /adj */ gluttonous.

بطانة *biṭaana* or *buṭaana* /n pl *-aat, baṭaayin*/ **1** lining (of a garment). **2** undercoat (of paint etc.). **3** *[mus]* (back-up) chorus. **4** *[naut]* shelf (for cargo).

بطينى *biṭeeni* /n pl *biṭeniyya*/ glutton.

بطّانيّة *baṭṭaniyya* /n pl *baṭaṭiin, baṭaniyyaat*/ blanket. *ɣurzit il-baṭṭaniyya [needlew]* blanket-stitch.

باطن *baaṭin* /n/ **1** /pl *bawaaṭin*/ inside, inner part. *ʕilm il-baaṭin* knowledge of the esoteric. *ʕaliim bi-bawaaṭin il-ʃumuur* informed about the intricacies of affairs. -/adjectivally/ *ʃil-ʕaql il-baaṭin* the subconscious. **2** /no pl/ Undiscernable One (epithet of God).

¶ *min il-baaṭin [comm]*: *miqawla min il-baaṭin* subcontracting. *taskiin mil-baaṭin* subletting.

باطنى *baaṭini* /adj */ **1** internal. *ṭibb[i] baaṭini* internal medicine. *duktoor baaṭini* physician. **2** esoteric.

الباطنيّة *ʃil-baṭniyya* /prop n/ populous area in Cairo between the Citadel and el-Azhar, known for its trade in drugs and hashish. -also *ʃil-baṭliyya*↓.

بطّن *baṭṭan* /vt/ **1** to line, pad. *baṭṭanit il-fustaan* she lined the dress. **2** to give an undercoat of paint to. -vn *tabṭiin*; ava/pva *mibaṭṭan*.

اتبطّن *ʃitbaṭṭan* /vi/ passive of *baṭṭan*. -iva *mitbaṭṭan*.

ب ط ن س

بطنسة *baṭansa* or *baṭunsa* /n pl *baṭaanis*/ *[naut]* half-deck (fore or aft) of a sailing boat.

ب ط و س

بطوس *baṭuus* /n/ *[naut]* wide timber running round the top of the gunwale of a Nile sailing boat (on which the boatman can walk).

ب ط ى see ب ط ء : *biṭi*

ب ظ ب ظ

بظبظ *baẓbaẓ* /vi/ **1** to exude, issue, ooze out. *miʃ ḥ-addi-huu-lak lamma ʕeen-ak tibaẓbaẓ* I won't give it to you even if your eye drops out. **2** to shake with fright. -vn *baẓbaẓa*; ava *mibaẓbaẓ*.

ب ظ ر

بظر *baẓr* /n pl *buẓuur*/ *[anat]* clitoris.

ب ظ ر م –

بظرميط *baẓramiiṭ* /adj invar/ **1** of mixed blood, mongrel. **2** chaotic, topsy-turvy. -also *bazramiiṭ*.

ب ظ ظ

بظّ *baẓẓ (u)* /vi/ **1** to ooze, squirt out. *dust[a] ʕaṣ-ṣurṣaar raaḥit maṣariin-u baẓẓa min guwwaa* I stepped on the cockroach and out squirted its insides. **2** to bulge, start (of the eyes). *ʕeen-i baẓẓit lamma ʃuft-a-ha* I went pop-eyed when I saw her. -vn *baẓẓ, baẓaẓaan*; ava *baaẓiẓ*.

بظاظة *baẓaaẓa: baẓẓ[i] baẓaaẓa* to project very much, as in *ʕeen-u baẓẓit baẓaaẓa* his eyes popped out of his head.

بظّظ *baẓẓaẓ* /vt/ **1** to cause to squirt out. **2** to cause (the eyes) to bulge or start. *ʃis-sukr[i] baẓẓaẓ ʕenay-ya* drunkenness made my eyes bulge. -vn *tabẓiiẓ*; ava/pva *mibaẓẓaẓ*.

اتبظّظ *ʃitbaẓẓaẓ* /vi/ passive of *baẓẓaẓ*. -iva *mitbaẓẓaẓ*.

ب ظ م

بظّم *baẓẓam* /vi/ to wear a mournful expression. *ʕaaʕid mibaẓẓam wala lli daafin* he's sitting looking as miser-

able as if he'd just buried a close relation. - vn *tabʒiim*; ava *mibaʒʒam*.
تبظيمة *tabʒiima* /inst n, pl *-aat*/ a mournful expression. *ʕalee ħittit diin tabʒiima* he really looks very gloomy.

ب ع ب ص
بعبص *baʕbaṣ* /vt/ **1** to goose, poke between the buttocks with a finger. ‖*ma-tuqʕud-ʃ*^{i} *tbaʕbaṣ fil-ʔakl [coarse]* keep your fingers out of the food! **2** *[coarse]* to put one over on (s.o.), play a dirty trick on (s.o.). - vn *baʕbaṣa*; ava/pva *mibaʕbaṣ*.
بعبوص *baʕbuuṣ* /n pl *baʕabiiṣ*/ **1** act of goosing. *ʔilli yimʃi wara l-ʕiyaal yistaahil il-baʕabiiṣ* ≈ he who takes the advice of children deserves to be treated like a child. **2** *[slang]* protrusion, little bump. ‖*da-nta ħittit baʕbuuṣ ma-tsawii-ʃ ħaaga* you're just a worthless little squirt. **3** *[coarse]* dirty trick. *miʃ kifaaya l-baʕbuuṣ illi-ddahlak* isn't that rotten trick he played on you enough?
بعبوصة *baʕbuuṣa* = *baʕbuuṣ*.
اتبعبص *ʔitbaʕbaṣ* /vi/ passive of *baʕbaṣ*. - iva *mitbaʕbaṣ*.

[1] ب ع ب ع
بعبع *baʕbaʕ* /vi/ **1** to grunt or bellow discontentedly (of camels). **2a** to give vent to one's feelings. **2b** to complain vociferously. - vn *baʕbaʕa*; ava *mibaʕbaʕ*.
بعبعة *baʕbaʕa* /n/ **1** grunt of a camel. **2** loud protestation, angry bluster.

[2] ب ع ب ع
بعبع *buʕbuʕ* <perh Copt> /n pl *baʕabiiʕ, baʕaabiʕ*/ bogeyman. *ma-tuxrug-ʃ*^{i} *bil-leel laħsan il-buʕbuʕ yiʔlaʕ-lak* don't go out at night or the bogeyman will get you! *ʃakl-a-ha zayy il-buʕbuʕ* ≈ she's as ugly as a witch.

ب ع ت
بعت، بعث *baʕat (a)* /vt/ **1** to send. *lissa ma-baʕatt*^{i}*-ʃ ig-gawaab* I haven't sent the letter yet. *ʔibʕat-lina ʔumm-u* send his mother to us. — /vi/ **2** to send provision. *ʔiʃtaval barra w-baqa mabsuuṭ wi-kaan dayman bi-yibʕat li-ʔahl-u* he got a job abroad and became quite wealthy and used always to remit to his family. *rabb-i-na yibʕat* may God provide. **3** /preverb/ to send word (to do s.th.) *baʕatuu-li qaluu-li l-xabar* they sent me the news. *ʔibʕat haat il-biira* send out for the beer! *baʕatu ygiibu t-tamargi* they sent someone to bring the nurse. - vn *baʕataan*; ava *baaʕit*; pva *mabʕuut*.
¶ *baʕat li-* to send for (s.o.). *lamma laqa faqqa kbiira baʕat li-miraat-u* when he found a large flat he sent for his wife. *kaanit ʔumm-u ʕayyaana fa-baʕatuu-lu* his mother was ill so they sent for him.
باعث *baaʕit* /n/ Provider (epithet of God).
مبعوث *mabʕuus* /n */ delegate, envoy.
بعث *baʕs* /n/ resurrection. ‖*ħizb il-baʕs [pol]* Renaissance Party (in Syria, Iraq and Lebanon).
بعثة *biʕsa* /n pl *-aat*/ mission, delegation. *biʕsa diblumasiyya* diplomatic mission.
اتبعث، اتبعت *ʔitbaʕat* /vi/ to be sent. - iva *mitbiʕit*.
انبعث، انبعت *ʔinbaʕat* = *ʔitbaʕat*. - iva *minbiʕit*.
انبعث *ʔinbaʕas*↑ /vi/ to arise, stem. *daragit ħaraara ʕalya munbaʕisa min it-tafaaʕul* a high temperature arising from the reaction. - vn *ʔinbiʕaas*; ava *munbaʕis*.

ب ع ث ر
بعثر، بعتر *baʕtar* /vt/ to scatter (about). *ma-tbaʕtar-ʃ il-filuus* don't throw money around! ‖*ħ-abaʕtar karamt-ak* I'll strip you of your dignity, I'll humiliate you. - vn *baʕtara*; ava/pva *mibaʕtar*.
اتبعثر، اتبعتر *ʔitbaʕtar* /vi/ to be scattered (about). - iva *mitbaʕtar*.

ب ع ث ر –
بعتران *baʕaṭraan* /n/ *[bot]* name given to species of Artemisia and Achillea.

ب ع ث see ب ع ت

ب ع ث ر see ب ع ت ر

ب ع ج
بعج *baʕag (i)* /vt/ **1** to make elliptical. **2** to make baggy. - vn *baʕagaan, baʕg*; ava *baaʕig*; pva *mabʕuug*.
منبعج *munbaʕig*↑ /adj/ elliptical.
اتبعج *ʔitbaʕag* /vi/ passive of *baʕag*. - iva *mitbiʕig*.

ب ع ج ر
بعجر *baʕgar*^{1} /vi/ to become fat and shapeless. *ʔil-wiliyya tixnit wi-baʕgarit kida* the woman grew fat and flabby. - vn *baʕgara*; ava *mibaʕgar*.
بعجر *baʕgar*^{2} /n/ nickname used to tease or mock one who is plump or clumsy.
اتبعجر *ʔitbaʕgar* /vi/ to become fat and shapeless. *balaaf il-xiyaara l-mitbaʕgara di* don't give me this bulbous cucumber. - ava *mitbaʕgar*.

ب ع د
بعد *biʕid*^{1} *(a)* /vi/ to be or become distant. *ʔil-filuus wi-ṣaaħib il-filuus ma-yibʕaduu-ʃ ʕaleek* neither the money nor the owner of the money is ever out of reach for you (i.e. they are at your command). *maṣr*^{i}

ma-tibʕad-ʃ^{i} *ʕala ħabiib [prov]* (Cairo is never inaccessible to those who love her) nothing is out of reach to those who desire it strongly enough. *nuqaṭ il-maṭaafi b-tibʕad masafaat ṭiwiila ʕan baʕḍ-a-ha* the fire-stations are very remote from one another. - vn *buʕd*.

بعد *biʕid*^{2} *(i)* /vi/ to stay away, remove oneself. *ʃibʕid ʕan in-naas dool* keep away from those people! *b-afaḍḍal ʃabʕid ʕan wagaʕ id-dimaay* I like to keep clear of bothersome matters. *ʃibʕid ʕan iʃ-ʃarr*^{i} *w-ɣannii-lu [prov]* keep your distance from trouble and deal with it diplomatically. - vn *buʕd*.

بعد *baʕad (i)* /vt/ **1** to take away, remove. *ʃibʕid il-laban ʕan in-naar* take the milk off the stove! *ħaawil yibʕid ik-koora ʕan ig-goon* he tried to get the ball away from the goal. **2** to keep away. *ʕawza tibʕidii-ni ʕan il-ħubb* do you want to keep me from love? *rabb-i-na yibʕid ʕannak wilaad il-ħaraam* may God keep evil people from you! (used prophylactically after reference to a misfortune). - vn *baʕadaan*; ava *baaʕid*; pva *mabʕuud*.

بعد *buʕd* /n/ **1** /vn/ ‖*da buʕd-(u)* it is beyond (his) reach, it is impossible for (him), as in *ʕaawiz taaxud il-filuus - da buʕd-ak* you want to take the money? that'll be the day! - *il-buʕd*^{i} *ɣaf*ə remoteness hardens one's feelings. - *buʕd*^{i} *naẓar* farsightedness, foresight. **2** /no pl/ distance. *ʕala buʕd*^{i} *talaata kiilu* at a distance of three kilometres. — /pl *ʃabʕaad*/ **3** dimension, aspect. *ʃil-buʕd ir-raabiʕ* the fourth dimension. *rasm*^{i} *sulaasi l-ʃabʕaad* isometric projection. *kull*^{i} *ʃabʕaad il-ħukm* all the aspects of the verdict. **4** *[mus]* interval.

أبعاديّة *ʃabʕadiyya* /n pl *-aat*/ *[obsol]* large agricultural estate. ‖*hiyya f-ʃirka tibqa ʃabʕadiyyit ʃabuu-k* is the company yours by exclusive right? (i.e. you behave as if the company were your father's estate).

بعد *baʕd* /prep, w foll pron suff also *baʕdii-*/ after. *ħa-tkuun fil-beet baʕd is-saaʕa tamanya* will you be at home after eight o'clock? *nazzil-ni ʕan-naṣya di ʃilli baʕd*^{i} *maḥaṭṭit il-ʃuubiis* drop me at that corner after the bus stop. *baʕd*^{i} *kida ṭallaq-ha wi-ngawwiz-ak ʃaḥsan minḥa* after that you divorce her and we'll marry you to someone better. *hiyya daxalit baʕdiikum* (or *baʕd*^{i} *minkum*) she went in after you. *baʕd*^{i} *bukra* the day after tomorrow. *baʕd*^{i} *baʕd*^{i} *bukra* the third day from today. ‖... *min baʕd(-u)* ... now that (he) has departed! (in expressions of mourning), as in *niʕmil ʃeeh min baʕdak* whatever shall we do now you're gone! - *la qabl(-u) wala baʕd(-u)* the like of it has never been seen before, nor ever will be again, as in *saakin fi-beet la qablu wala baʕdu* he is living in a wonderful house, *muṣiiba la qablaha muṣiiba wala baʕdaha muṣiiba* an unparalleled disaster.

¶ *baʕd*^{i} *ma* /conj/ after. *baqeet ʃamnaʕ-ha mil-xuruug baʕd*^{i} *ma ggawwizna* I began to forbid her going out after we were married.

بعدين *baʕdeen* /adv/ **1** afterwards, then. *ħ-akkallim ʕanha baʕdeen* I'll talk about it later. *wi-baʕdeen ʕamalti ʃeeh* and then what did you do? ‖*wi-baʕdeen* (1) whatever is to be done? as in *miʃ ħa-yilħaq yiqra l-kitaab qabl il-imtiħaan. - ṭab wi-baʕdeen* 'He won't manage to read the book before the exam.' 'Well what's he going to do then?' (2) (also *wi-baʕdeen maʕa-, wi-baʕdeen wayya-*) whatever next, whatever will (he) get up to next, whatever is the matter with (him), as in *wi-baʕdeen (maʕaak) ya walad - kifaaya ʕabaṭ baqa* that's quite enough from you, boy - no more fooling now! *wi-baʕdeen (maʕaakum) - ma-gibtuu-ʃ id-duktoor leeh* whyever didn't you get the doctor! (3) (also *wi-baʕdeen yaʕni*) so ...? as in, *kaan kull*^{i} *sana yiṭlaʕ il-ʃawwil ʕala l-faṣl. - wi-baʕdeen. - wala ʿqableen bass*^{i} *b-addii-k fikra* 'He used to be top of the class every year?' 'So ...?' 'Nothing at all; I'm just giving you an idea.' **2** too, as well. *goz-ha wiħiʃ wi-ʃawlad-ha mutʕibiin wi-baʕdeen ṣiħħit-ha taʕbaana* her husband is a bad lot, her children are tiresome and on top of all that she's in poor health.

بعد *biʕd: biʕd iʃ-ʃarr* ≈ God forbid, perish the thought (used prophylactically at mention or suggestion of misfortune), as in *ʃana xayfa ykuun - biʕd iʃ-ʃarr (ʕalee) - ħaṣal-lu ħaaga* I'm afraid that something, God forbid, may have happened to him.

بعيد *biʕiid* /adj pl *buʕaad, buʕada*/ **1** distant, far. *fataḥ maktab fi-ħitta bʕiida* he opened an office in a remote place. *biʕiid ʕan il-ʕeen biʕiid ʕan il-ʕalb [prov]* out of sight, out of mind. *min zaman biʕiid* long since. ‖*raagil biʕiid in-naẓar* or *raagil naẓar-u bʕiid* a far-sighted man. - *ya bʕiid* insulting form of address, in which mention of the name of the person addressed is deliberately avoided. - *ʃil-biʕiid* form of reference to one who is absent and is the object of censure, intended to show that no aspersions are cast on anyone present. - *biʕiid ʕan-* prophylactic phrase accompanying mention of something undesirable ≈ may such a thing be far from you! as in *ħalit-na baqit zift - biʕiid ʕannak* we have fallen on evil times, may the like of them never come upon you! - *biʕiid ʕan ʃanab-ak* ≈ it's quite beyond you, you'll never manage (to have or do something). **2** unlikely. *biʕiid yikuun rawwaḥ badri* it is unlikely that he would have gone home early. *miʃ biʕiid tismaʕ*

sirr[i] gdiid it's not improbable that you'll hear a new secret. ‖ *ʃabah biʕiid* a hardly-perceptible likeness. – /adv/ **3** far, far away. *ʃuft-u min biʕiid* I saw him from afar. *ʃig-gawabaat bi-tiigi bʕiid ʕan baʕḍ-a-ha* the letters come spaced far apart. ‖*ḫa-nruuḥ biʕiid leeh* why should we go so far (in looking for examples and precedents, when there are plenty close at hand)? *min biʕiid li-bʕiid* (1) from a distance, remotely, as in *beeni w-beenu ʕaraaba min biʕiid li-biʕiid* he and I are distantly related. (2) discreetly, from a discreet distance, as in *ʃis ʃal ʕalee min biʕiid li-bʕiid* make discreet enquiries about him.

أبعد *ʃabʕad[1]* /el/ **1** more/most distant or unlikely. **2** *ʃil-ʃabʕad* form of reference to one who is absent and is the object of censure (or to one present but ignored) ≈ the unmentionable you-know-who.

بعّد *baʕʕad* **1** /vt/ to remove. **2** /vi/ to remove oneself, go far away. *baʕʕadu tibqu ʕasal ʕarrabu tibqu baṣal* ≈ familiarity breeds contempt. -vn *tabʕiid*; ava *mibaʕʕad*.

اتباعد *ʃitbaaʕid* /vi/ to steer away, keep clear. *kull[i] ma nqarrab-lu yitbaaʕid ʕanna w-ʕan mafakil-na* whenever we make friendly approaches to him, he steers away from us and our problems. -vn *tabaaʕud*; ava *mitbaaʕid*.

أبعد *ʃabʕad[2]* /vt/ to remove, exclude, eliminate. *ʃabʕaduu ʕan if-firka* they removed him from the company. -vn *ʃibʕaad*; ava *mubʕid*; pva *mubʕad*.

استبعد *ʃistabʕad, ʃistabʕid* /vt; the literary passive *ʃustubʕid* also occurs/ **1** to consider (too) far. *bi-tistabʕid il-miʃwaar min hina li-skindiriyya* do you think the journey from here to Alexandria is (too) far? **2** to reject as unsuitable, unlikely or untenable. *ʃil-xubara bi-yistabʕidu n-naẓariyya di* the experts discount this theory. *ʃil-mawḍuuʕ da stubʕid* this topic has been rejected. **3** to select for remoteness. *ʃistabʕad-lak ḫitta ʕan iṭ-ṭariiq ʃibni fiiha* find yourself a plot of land to build on well away from the road. - vn *ʃistibʕaad*; ava *mistabʕid*; pva *mustabʕad*.

ب ع ر

بعر *baʕr* /coll n/ dung (specifically of sheep, goats and camels).

بعرة *baʕra* /unit n, pl *-aat*/ piece of dung (of a sheep, goat or camel). ‖*baʕra wi-yqaawiḥ it-tayyaar [prov]* (he's only) a turd, and yet he goes against the current (said of a low person who sets himself up against his betters).

بعّر *baʕʕar* /vi/ to dung, defecate (of sheep, goats and camels). -vn *tabʕiir*; ava *mibaʕʕar*.

ب ع ر

بعور *baʕruur* /n pl *baʕariir*/ **1** young camel. **2** insignificant person.

بعرورة *baʕruura* /n pl *-aat*/ young female camel.

ب ع ز ق

بعزق *baʕzaq[1]* /vt/ to scatter. *kidb[i] msaawi wala sudq[i] mbaʕzaq [prov]* consistent lying is more credible than garbled truth. *ʃil-ʕumr[i] miʃ baʕzaqa [prov]* life is not a squandering (matter). ‖*ḫ-abaʕzaq karamt-ak* I'll strip you of your dignity, I'll humiliate you. -vn *baʕzaqa*; ava/pva *mibaʕzaq*.

بعزق *baʕzaq[2]* /n/ term of reference to a ridiculous person.

ب ع س see ب ع ت: *mabʕuus, baʕs, biʕsa, ʃinbaʕas*

ب ع ض [1]

بعض *baʕḍ* /n, w pron suff often *baʕḍii-*/ **1a** some, part of, a few, a number of. *kaan ʕandu baʕḍ il-ʃamal fiʃ-ʃifa* he had some hope of recovery. *baʕḍ il-ʃawqaat niḫibb[i] ninzil naakul barra* sometimes we like to go and eat out. *baʕḍ in-naas yḫibbu yṣayyifu fi-skindiriyya wil-baʕḍ it-taani ma-yḫibbuu-ʃ yisiibu l-qaahira* some people like to spend the summer in Alexandria but others do not like to leave Cairo. **1b** /in constr with indef n/ a little of, a touch of. *simiʕt[i] baʕḍ[i] kalaam* I heard a little gossip. **2a** one another, each other. *ʕablu baʕḍ[i] fin-naadi* they met one another in the club. *ḫuṭṭ il-kutub ʕala baʕḍ(-a-ha) fir-rukn* stack the books on top of one another in the corner. *ʃurbuṭ il-ḫibaal fi-baʕḍ(-a-ha)* tie the ropes together. *ma-tiskunuu-ʃ maʕa baʕḍ(-ii-ku) leeh* why don't you share accommodation? *ḫuṭṭ if-fanṭiteen guwwa baʕḍ* put the two cases inside one another. *ʃil-ʕamiṣeen zayy baʕḍ* the two shirts are like each other. *xallii-hum biʕiid ʕan baʕḍ(-u-hum)* keep them apart (away from each other). *ʃil-ʕarabiyyiteen daxalu f-baʕḍ* the two cars ran into each other. ‖*fi-(raʕabit) baʕḍ* together as an average, as in *xud fiwayyit il-manga dool fi-(raʕabit) baʕḍ* take this heap of mangoes as one lot (where the extra good quality of one would compensate for the lower quality of another), *ʃana ḫ-abiʕ-lak il-beteen fi-(raʕabit) baʕḍ[i] b-xamsiin ʃalf[i] gneeh il-waaḥid* I will sell you the two houses together in one deal at fifty thousand pounds each (as if the two houses were exactly alike, which they are not). - *ʃin-naas li-baʕḍ(-a-ha)* people are meant to help one another (said, e.g., by someone who is being thanked for offering his help). **2b** (him)self, (her)self,

etc. *ʕiṣ-ṣafiiḥa daxalit fi-baɛḍ-a-ha* the tin was crushed or pressed together (lit: went into itself). *waḥda ɛaguuza w-karkuuba wi-mkaɛbara kida f-baɛḍ-a-ha* an old woman all stumpy and gnarled. ‖*zayy*^{i} *baɛḍ-u* O.K., it makes no difference, it's all the same to me, as in *tiḥibb*^{i} *timʃi dilwaqti.* - *zayy*^{i} *baɛḍ-u* 'Do you want to go now?' 'All right.' *huwwa lissa ma-katab-ʃ il-gawaab.* - *zayy*^{i} *baɛḍ-u* 'He still hasn't written the letter.' 'Never mind.' - *zayy*^{i} *baɛḍ(-u) [euphem]* bad, awful, as in *ʕil-waaḥid bi-yizhaq mil-ɛiiʃa lli zayy*^{i} *baɛḍ-a-ha di* one gets fed up with this terrible life, *ya nhaar zayy*^{i} *baɛḍ-u* how awful! good grief! - *ʕaxad baɛḍ(-u) wi-* to up and (do s.th.), make a move to (do s.th.), as in *xud baɛḍ-ak wi-ʃlaɛ dawwar ɛal-waad* shake a leg and go and look for the boy!

¶ *ɛala baɛḍ-* /adv/ (1) (of a divisible whole) together, unseparated, (as) one lot. *ʕiddii-ni ḥittit laḥma tneen kiilu ɛala baɛḍ-a-ha* give me two kilos of meat in one piece. *ḥittit ig-gibna di ɛala baɛḍ-a-ha tiʃlaɛ qadd*^{i} *ʕeeh* what is the weight of this whole piece of cheese? *ʕid-dunya kida ɛala baɛḍ-a-ha ma-tiswaa-ʃ fardit gazma* this life (as opposed to the life hereafter) altogether is not worth anything. (2) (of a person) in a composed position. *ʕuqɛud ɛala baɛḍ-ak ya wala* sit properly, boy! *baqeet qaaɛid miʃ ɛala baɛḍ-i mil-qalaq* I was sitting restless with worry. (3) (of a place, of a crowd) tightly crowded, tightly packed together. *ʕil-ʕutubiis baqa ɛala baɛḍ-u* the bus has become crammed with people. *ʕin-naas ɛala baɛḍ-a-ha fil-maḥaṭṭa* people are jammed together in the station.

ب ع ض [2]

بعوض *baɛuuḍ*↑ /coll n/ gnat(s).

بعوضة *baɛuuḍa*↑ /unit n, pl *-aat*/ a gnat.

ب ع ض ش ى

بعضشى *baɛḍiʃi* /n/ **1** tiny amount. *baɛḍiʃi malḥ* a sprinkling of salt. **2** Tiny (given prophylactically as a boy's name by mothers whose children have died, in order to ward off the evil eye). **3** scornful form of address to a man.

ب ع ك ك

بعكك *baɛkik* /vt/ to confuse, muddle up, mess up. - vn *baɛkaka*; ava/pva *mibaɛkik.*

بعكوكة *baɛkuuka* /n pl *baɛakiik*/ affectionate form of reference to any old contraption (especially a car, ship, bicycle etc.). *ʕil-baɛkuuka wiqfit minni* the old jalopy conked out on me.

اتبعكك *ʔitbaɛkik* /vi/ to be confused, be muddled up. - iva *mitbaɛkik.*

(ب ع ل)

بعل *baɛl* /n pl *buɛuul, buɛuula*/ husband, used especially in lamentation by a woman whose husband has died.

بعلى *baɛli* /adj/ not irrigated during the later stages of growth (especially *fuul*, garlic and onions).

بعل *biɛl* /n/ *[deris]* pot belly of a heavy eater. *ʕabu biɛl* glutton.

ب ع و و

بعوّ *baɛaww* /n/ fabulous beast characterized by fatness and ugliness, bogeyman, troll.

بعوّة *baɛawwa* /n/ troll-woman.

ب غ ا ز

بوغاز *buɣaaz* <T *boğaz*> /n pl *bawaɣiiz, buɣazaat*/ **1** strait. *markib buɣaaz* lightship. **2** harbour mouth, (and hence also) breakwater. *baab il-buɣaaz* the harbour entrance.

ب غ ا ش

بغاشة *buɣaaʃa* <T *poğaça*> /coll n/ sweetmeat made of flaky pastry and cut into diamond shapes.

بغاشاية *buɣaʃaaya* /unit n, pl *buɣaʃaat*/ a piece of *buɣaaʃa.*

ب غ ء see ب غ ى : *baɣaaʔ*

ب غ ب غ

بغبغان *baɣbaɣaan* /n pl *-aat*/ parrot. *bi-yikkallim zayy il-baɣbaɣaan* he talks non-stop. - also *babbaɣaan.*

بغبغ *baɣbaɣ* /vi/ to babble, talk unintelligibly or nonsensically. - vn *baɣbaɣa*; aya *mibaɣbaɣ.*

ب غ ت [1]

بغتة *baɣta* /n/ surprise. *ɛala baɣta* by surprise, all of a sudden. - /adverbially/ *ʃiliɛ ɛaleena baɣta* he took us by surprise.

باغت *baaɣit* /vt/ to take by surprise, come upon by surprise. *nibaaɣit il-ɛaduw* we surprise the enemy. - vn *mibaɣta*; ava *mibaaɣit.*

اتباغت *ʔitbaaɣit* /vi/ to be surprised, be taken by surprise. - iva *mitbaaɣit.*

ب غ ت [2]

بغيتة، بغيتة *biɣiita, baɣiita* /coll n/ small seeds found as impurities in rice, grain etc.

مبغّت *mibaγγat* /adj/ full of *biγiita*.
اتبغّت *ʔitbaγγat* /vi/ to be adulterated, be mixed with impurities. - iva *mitbaγγat*.

ب غ ث see ² ب غ ت

ب غ د د
بغداد *buγdaad, baγdaad* /prop n/ Baghdad.
بغدادى *buγdaadi, baγdaadi* /adj */ pertaining to Baghdad. ‖*ḥinna buγdaadi* type of fine-quality henna that yields a dark dye. - *ḥaadi baadi siidi mḥammad il-buγdaadi* first part of a counting rhyme used by children ≈ eenie-meenie-mynie-mo.
بغدادلى *buγdadli* /n/ **1** wooden piece half an inch by one inch. **2** lath work.
اتبغدد *ʔitbaγdid* /vi/ **1** to act aloofly or disdainfully. *bi-titbaγdid ɛan-naas kida leeh* why do you look down on people so? **2** to enjoy life to the full, live opulently. *naas bituuɛ baγdada* people who enjoy the good life. - vn *baγdada*; ava *mitbaγdid*.

ب غ ز see ب غ ا ز : *buγaaz*

ب غ ش see ب غ ا ش : *buγaafa, buγafaaya*

ب غ ض
بغض *buγḍ* /n/ hatred.
أبغض *ʔabγaḍ: ʔabγaḍ il-ḥalaal ɛand allaah it-talaaq* the most odious of what God permits is divorce.
مبغوض *mabγuuḍ* /adj */ hated.

ب غ ل
بغل *baγl* /n pl *biγaal*/ **1** mule. *ḥadd' yquul il-baγl' fil-ʔabriiq* ≈ would anyone say anything so stupid? *qaalu lil-baγl' miin ʔabuu-k qaal xaal-i l-ḥuṣaan [prov]* when they asked the mule who his father was he told them his uncle was the horse ≈ everyone likes to show himself in the most favourable light. *taxxan widn il-baγl' b-qoolit fii* flatter a mule by addressing him as if he were a horse ≈ flatter gullible people by letting them think you have a high opinion of them. *ʔagsaam biγaal wi-ɛuquul ɛaṣafiir* (those people are) all brawn and no brain. ‖*baγl usturaali* a stupid oaf. **2** pier (of a bridge).
بغلة *baγla* /n pl *-aat*/ **1** she-mule. *wallid il-baγla* ≈ he did the impossible. **2** pier (of a bridge).
بغّالى *baγγaali* /adj invar/ pertaining to mules. *ɛarabiyyaat baγγaali* mule-drawn carts.
بغّل *baγγal* /vi/ to become clumsy and stupid. - vn *tabγiil*; ava *mibaγγil*.

استبغل *ʔistabγal* **1** /vt/ to consider stupid. **2** /vi/ to become mulish, behave stubbornly. - vn *ʔistibγaal*; ava/pva *mistabγal*.

ب غ و
بغو *baγw* /adj invar/ *[rur]* unripe, not mature (of fruit, vegetables etc.).

ب غ ى
بغاء *biγaaʔˁ* or *baγaaʔˁ* /n/ prostitution.

ب ف ت
بفتة *bafta* <P *bâfta*> /n/ calico. ‖*sumɛa beeḍa zayy il-bafta* a spotless reputation.

ب ف ت ت
بفتّة *bafitta, bavittaˁ* <It *bavetta*> /n pl *-aat*/ (child's) bib or feeder.

ب ف ت ى ك
بفتيك *bufteek, bifteek* <Fr *bifteck*> /n/ beaten steak cooked by frying.

ب ف ر
بفرة *bafra* <obsolete brand name> /coll n/ cigarette paper(s).

¹ ب ف ف
بفّة *baffa* /n pl *-aat, bufaf*/ pair (in dice).

² ب ف ف
بفّ *buff* <Fr *pouf*> /n pl *-aat, bufuuf*/ pouffe, large leather cushion or hassock stuffed and used as a low seat.
بفّة *buffa* = *buff*.

ب ف ن ت
بوفنت *bufant* <Fr> /adj invar/ puffed out, bouffant.

ب ف ى ه
بوفيه *bufeeh* <Fr> /n pl *-aat*/ **1** canteen, snack bar. **2** buffet-style meal. **3** buffet, sideboard.

ب ق ب ش
بقبش *baqbiʃ* **1** /vt/ to cause to blister. **2** /vi/ to blister. - vn *baqbaʃa*; ava/pva *mibaqbiʃ*.
بقبيشة *buqbeeʃa* /n pl *baqabiiʃ, buqbeʃaat*/ blister.

ب ق ب ق
بقبق *baqbaq* **1** /vt/ to cause to blister. **2** /vi/ to blister.

ʃafayf-i baqbaqit min if-faɬɬa my lips blistered from the red pepper. - vn *baqbaqa*; ava/pva *mibaqbaq*.
بقبيقة *buqbeeqa* /n pl *baqabiiq, buqbeqaat*/ blister.
اتبقبق *ʔitbaqbaq* /vi/ to become blistered. - ava *mitbaqbaq*.

ب ق ج
بقجة *buqga* <T *bokça*> /n pl *buqag, buqgaat*/ **1** cloth bundle tied with a knot. **2** *[carp]* (any type of) hinge in which the two leaves are riveted together round a central pivot. **3** *[constr]* patch of plaster put on a wall to regulate the depth of stucco or other facing that is to be applied. **4a** square section in tent appliqué design (see Pl.H, 5). **4b** motif in tent appliqué design (see Pl.H, 13).
بقّج *baqqag* /vi/ *[constr]* to put patches of plaster on a wall to regulate the depth of stucco or other facing. - vn *tabqiig*; ava *mibaqqag*.

ب ق د و –
بقدونس *baqduunis* (also *maqduunis*) /n/ parsley.

ب ق ر
بقر *baqar* /coll n/ cattle (other than buffalo).
بقرة *baqara* /n pl *-aat*/ cow. *ʔin wiqʕit il-baqara tiktar sakakin-ha [prov]* (if the cow falls, the knives abound) ≈ everyone is against the unfortunate.
بقرى *baqari* /adj invar/ pertaining to bovines other than buffalo. *laḥma baqari* beef other than buffalo meat. *laban baqari* cow's milk.

ب ق ر و ر
بقرور *baqruur* <Copt> /n/ frog.

ب ق س
بقس *baqs* /n/ box tree, boxwood.

ب ق س م –
بقسماط *buqsumaaṭ* <Gr *paksimadi*> /coll n/ **1** bread slices hardened by rebaking, rusks, breadsticks. **2** (dried) bread-crumbs.

ب ق ش ش
بقشيش *baqʃiiʃ* <P *bakhshîsh*> /n/ tip. *ʔeeh raʔy-ak fil-wahba wil-baqʃiiʃ* what do you think about gratuities and tips?
بقشش *baqʃiʃ* /vi/ to disburse money in a condescending manner. - vn *baqʃaʃa*; ava *mibaqʃiʃ*.

ب ق ط see ب ق و ط : *baquuṭi*

ب ق ع [1]
بقعة *buqʕa* /n pl *buqaʕ, buqʕaat*/ **1a** stain, spot. *muziil lil-buqaʕ* spot remover. **1b** spot (as a plant disease). **2** (also *buqʕa*) location, spot. *ʔil-beet fi-buqʕa mumtaaza* the house is in an excellent spot.
بقّع *baqqaʕ* **1** /vt/ to spot, stain, blotch. *ʔiz-zeet baqqaʕ il-qamiiṣ* the oil stained the shirt. **2** /vi/ to stain or be stained, blotch or be blotched. *ʔil-qamiiṣ baqqaʕ* the shirt stained. - vn *tabqiiʕ*; ava/iva *mibaqqaʕ*.
اتبقّع *ʔitbaqqaʕ* /vi/ to be or become stained or blotched. - vn *tabaqquʕ*[ˆ]; ava *mitbaqqaʕ*.
تبقّع *tabaqquʕ* /n/ spot (as a plant disease).

ب ق ع [2]
بقع *buqaʕ: ʃuqaʕ buqaʕ (ya rabb[i] yuqaʕ) [children]* ≈ hope he falls! (chanted when someone is attempting a difficult climb).

ب ق ف
بقف *baqf* <perh Copt> /n pl *buqúfa*/ lummox, oaf. -/adjectivally/ *ʃamma raagil baqf[i] ṣaḥiiḥ* what a real oaf of a man!

ب ق ق [1]
بقّ *buqq* <cf Lat *bucca*> /n/ **1a** mouth. *ḥuṭṭ-u f-buqq-ak* put it in your mouth. *huwwa b-buqq-u ṭalab il-filuus* he asked for the money himself. *ʔil-buqq il-maqfuul ma-yxuff[i]-huu-ʃ id-dibbaan [prov]* (flies do not enter a closed mouth) keep your mouth shut and all will be well. *buqq-a-ha bi-ynaqqaṭ ʕasal* she has a honeyed tongue. *ʔil-marabba ṭilʕit zayy is-sukkar tistaahil buqq-ak* the jam turned out to be delicious - really worth eating. ‖*yislam buqq-ak* ≈ well said! - *buqq is-sabʕ* snapdragon, antirrhinum. **1b** mouthful. *ḫ-akl-u ʕala buqq[i] waaḥid* I'll eat it up in one mouthful. *ʔiddii-ni buqq* give me a mouthful. **2** opening, aperture. *buqq if-ʃalta* the opening of the cushion.
بقّيقى *buqqeeqi* /adj/ oral, verbal. -/adverbially/ *qul-haa-lu buqqeeqi kida* just give him the message orally.

ب ق ق [2]
بقّ *baqq[1] (u)* /vt/ to cause to split open or burst. *daas ʕak-koora baqq-a-ha* he trod on the ball and burst it. - vn *baqq, baqaqaan*; ava *baaqiq*; pva *mabquuq*.
بقّة *baqqa[1]* /pl *-aat*/ instance noun of *baqq*.
اتبقّ *ʔitbaqq* /vi/ passive of *baqq[1]*. - iva *mitbaqq*.
انبقّ *ʔinbaqq* = *ʔitbaqq*. - iva *minbaqq*.

ب ق ق [3]

بقّ *baqq* [2] /coll n/ **1** bedbug(s). ‖*damm-u zayy il-baqq* ≈ he's a drag. **2** any of a variety of plant pests.

بقّة *baqqa* [2] /unit n, pl *-aat*/ a bedbug. *zayy il-baqqa tiwlid miyya w-tquul ya qillit il-xalaf [prov]* like the bedbug, which gives birth to a hundred and says, 'How few!' ≈ the unworthy breed too much.

ب ق ل

بقالة *biqaala* /n pl *-aat*/ **1** grocery trade. *(maḥall[i]) biqaala* grocery shop. **2** groceries.

بقول *buquul* /pl n/ legumes.

بقولى *buquuli* /adj/ leguminous.

بقّال *baqqaal* /n */ grocer.

بقّل *baqqal* /vi/ to soften (after soaking in water) and be about to sprout (of legumes). - vn *tabqiil*; ava *mibaqqal*.

ب ق ل ا و

بقلاوة *baqlaawa* <T *baklava*> /n/ confection made of filo pastry with syrup and nuts. ‖*looḥ baqlaawa* or *ṣaaga baqlaawa* cross-hatched steel plate, anti-slip plate.

ب ق ل ط

بقلط *baqlaṭ* /vi/ to become plump or chubby. - vn *baqlaṭa*; ava *mibaqlaṭ*.

ب ق ل ظ

بقلظ *baqlaẓ* [1] /vi/ to become chubby. - vn *baqlaẓa*; ava *mibaqlaẓ*.

بقلظ *baqlaẓ* [2] /n/ *[deris]* plump person.

بقلوظ *baqluuẓ* /adj pl *baqaliiz*/ chubby.

ب ق ل ل

بقلولة *baqluula* <perh Copt> /n pl *baqaliil, baqlulaat*/ bubble, blister.

بقلل *baqlil* /vi/ **1** to become bloated, puff up. *ʕeen-u baqlilit* his eye became puffy. **2** to gurgle (of a container of liquid). **3** to bubble, effervesce. - vn *baqlala*; ava *mibaqlil*.

بقليلة *buqleela* /n pl *baqaliil, buqlelaat*/ bubble, blister.

ب ق و ط

بقوطى *baquuṭi* <Copt> /n/ tin dish or small basket into which vegetables are placed as they are selected for purchase.

ب ق ى

بقى *baqa* [1] *(a)* /vi/ **1** to be. *da yibqa gooz-ik* is that your husband? *ma-tibqaa-ʃ magnuun* don't be crazy! *kaan dayman bi-yibqa zaʕlaan* he was always annoyed. *ʃik-kalam-da yibqa ʃeeh* what kind of talk is that? *ʃis-sitt[i] di tibqaa-lak ʃeeh* how is this woman related to you? *kull[i] ma yibqa l-qumaaʃ rixiiṣ kull[i] ma tibqa fital-u ʃaqall* the cheaper the cloth, the looser the weave. **2a** to become. *ḫa-yibqa duktoor ʃin ʃaaʃ allaah* God willing he'll become a doctor. *xud id-dawa w-ḫa-tibqa kwayyis* take the medicine and you'll get well. *baqeet ʕala l-ḫadiida* I became penniless. **2b** /w neg/ to be (no longer). *ma-baqit-ʃ[i] ṣṣayyara* she is no longer young. *ma-baqaa-ʃ ʕandu muxx* he no longer has any sense. **3** to arrive, attain (at or to a place, time or condition). *miʃ ḫ-atkallim li-ḫadd[i] ma nibqa f-maṣr* I shan't speak till we reach Cairo. *ʃis-saaʕa baqit talaata* or *baqeena s-saaʕa talaata* it's three o'clock now. *baqa fig-gamʕa* he has joined the university. *baqit fi-muʃkila* she got involved in a problem – /impersonally/ **4a** there has elapsed. *baqaa-li saaʕa b-axabbaṭ ʕal-baab* I've been pounding on the door for an hour. *baqa-lha mʕaaya talat siniin* she has been with me for three years. *ma-baqa-luu-ʃ diqiqteen hina* he's hardly been here two minutes. **4b** there has accumulated or accrued. *bi-kida yibqaa-lak ʕandi ʕafara gneeh* that makes ten pounds I owe you. *baqa ʕandina fluus kitiir* we accumulated a lot of money. – /preverb/ **5a** to begin to. *baṭn-i baʃit tiwgaʕ-ni* my stomach started hurting. *baʕd ig-gawaaz baqeet ʃamnaʕ-ha min il-xuruug* after we got married I did not allow her to go out. *dilwaqti bass[i] baqit tiigi kull[i] yoom* only now has she started coming every day. **5b** /w neg/ to be (no longer) engaged in or accustomed to (doing s.th.). *ma-baqaa-ʃ yizur-na xalaṣ* he has stopped visiting us. *ma-baqet-ʃ aḫibb-ak* I don't like you any more! **6** to arrive at the point of (doing s.th.). *lamma tibqi tlaaqi raagil (ʃibqi) ʃitgawwizii* when you find a man, marry him! **7** modal of constant or repeated action. *lamma kunt[i] fil-mustaffa baqit tiigi tzur-ni kull[i] yoom* when I was in hospital she visited me every day. *baqeet ʃanaadi w-humma miʃ samʕin-ni* I called and called but they didn't hear me. **8** modal of decision or emphasis. *ḫ-abqa ʃaxṭaf rigl-i w-ʃazuur-u* I'll go and pay him a quick visit then. *ʃibqi taʕaali (ʕandina) ʃwayya* do come around (to our house) for a while! *nibqa ttafaqna* we've agreed then! *yibqa yirḍii-k ik-kalam-da* then you're happy about what was said? *baqa xalaṣ* well then, that's that! - /impersonally/ *yibqa ttafaqna* we've agreed then!

بقى *biqi (a)* /vi/ **1** to stay, remain. *biqyu ʕandina l-ḫadd iṣ-ṣubḥ* they stayed with us till morning. **2** /impers/ there remained, there was left over. *biqii-lu ʃahreen*

fif-fuxl he had another two months of work to go. *baaqi ɛaleekum talaata gneeh* you still owe three pounds. - ava *baaqi*.

باقى *baaqi* **1** /ava/ ‖ *ʕahu da lli kaan baaqi* that's all I need! that's the limit! - *baqyaa-lak* (it's waiting for you) I'll get you for that! - *ħayaat-ak il-baqya* ≈ may your life be long (response to *ʕil-baqiyya f-ħayaat-ak*). — /n/ **2** /pl *baqyiin, bawaaqi*; always def/ the rest, the others, the remainder. *baɛḍ-u-hum qaɛad ɛal-ʕarḍ[i] wil-baqyiin wiqfu* (or *wil-baaqi wiqif*) some of them sat on the ground and the rest stood. *xud kitaab waaħid wi-siib il-baqyiin* (or *il-baaqi*) take one book and leave the others. *xud ħisaab-ak wi-haat il-baaqi* take what you're owed and give me the change. *ɛuqbaal il-bawaaqi* ≈ may the rest of us (or you, or them) be as fortunate (a good wish on a happy occasion, or bitter remark on a unhappy one). **3** /no pl/ Everlasting One (epithet of God).

بقى، بأه *baqa*[2] /part/ **1** so, then, now. *ruuħu baqa* go, then! very well, go! *ʕana ħ-aɛallim-ak baqa* I'll teach you then! *ʕixtifi baqa* that's enough now! **2** however, on the other hand. *ʕana ʕafaḍḍal il-qism il-ʕadabi - wald-i baqa ɛayiz-ni ʕaxuff iṭ-ṭibb* I prefer the arts side, but my father wants me to go into medicine.

بقى *baqi: ɛumr i/-faqi baqi [prov]* the life of the scamp lasts longest.

أبقى *ʕabqa* /el/ more/most lasting. ‖ *wil-ħayy[i] ʕabqa mil-mayyit* ≈ the living deserve more consideration than the dead. - *ʕaxuu-k ʕabqaa-lak* ≈ your brother is your most constant friend (injunction to show greater consideration for one's brother than for any friend).

بقاء *baqaaʕ* /n/ survival. ‖ *ʕil-baqaaʕ li-llaah* only God is eternal (expression of condolence to one bereaved).

بقيّة *baqiyya* /n, constr *baqiit* and *baqiyyit*, pl *bawaaqi*/ remainder, rest. *laazim baqiit il-ɛidda titrisil* the rest of the equipment must be washed. ‖ *baqiit il-ʕiid* tip, informal commission. - *ʕil-baqiyya f-ħayaat-ak* expression of condolence ≈ the deceased will continue to live through you!

بقّى *baqqa*[3] /vt/ to cause to remain. *kalit wi-baqqit ʃiwayyit ʕakl[i] l-axuu-ha* she ate and left some food for her brother. - vn *tabqiyya*; ava *mibaqqi*.

اتبقّى *ʕitbaqqa* /vi/ there remained. *ʕitbaqqa ɛalayya talaata gneeh* I still owed three pounds. - ava *mutabaqqi↑, mitbaqqi*.

يبقى *yibqi* /imperf v/ to cause to remain, preserve (of God). *rabb-i-na yibqi ħayaat-ak* may our Lord preserve you! - ava *mibqi*.

¶ *yibqi ɛala* to spare, let be. ‖ *ma b-yibqii-ʃ ɛala ħadd* he spares no-one with his words.

استبقى *ʕistabqa* /vt/ to cause to stay. *yimkin yistabquu-ni ʃwayya baɛḍ[i] sinn il-maɛaaʃ* perhaps they will keep me on for a while after retirement age. - vn *ʕistibqa*; ava *mistabqi*.

استبقّى *ʕistibaqqa*[↓] /vi/ there remained. *dafaɛt[i] gneeh wi-stibaqqa ɛalayya xamsiin qirf* I paid one pound and was left owing fifty piastres. - ava *mistibaqqi*.

ب ك see ب ى ه : *bakawiyya*

ب ك ا ر

بكار *bikaar* <perh P *pargâr*> /n pl *-aat*/ circle, or arc, or anything (e.g., a strip of metal) formed into a circle or arc.

ب ك ا ش

بكاش *bikaaʃ* <Fr *picage*> /n/ act of pricking piano hammers to soften their felt.

ب ك ا ن

بكان *bikaan* <prob Engl> /coll n/ pecan nut(s).

ب ك ب ا -

بكباشى *bikbaaʃi, bakbaaʃi* <T *binbaşı*> /n pl *-yya*/ *[obsol]* army rank equivalent to lieutenant-colonel (replaced by rank of *muqaddam*). - also *bimbaaʃi*.

ب ك ب ب

بيكاب *bikabb[1]* <Engl *pick-up*> /n pl *-aat*/ pick-up truck.

بيكاب *bikabb[2]* <Fr *pick-up*> /n pl *-aat*/ record-player.

ب ك ب ر ت

بكابورت *bakaburt* <It *boccaporto*> /n pl *-aat*/ **1** manhole. **2** cesspit.

ب ك ب ك

بكبك *bakbik* /vi/ to bubble, effervesce. - vn *bakbaka*; ava *mibakbik*.

ب ك ت

بكّت *bakkit* /vt/ to censure, reprove, reproach. - vn *tabkiit*; ava/pva *mibakkit*.

اتبكّت *ʕitbakkit* /vi/ to be censured, be reproved, be reproached. - iva *mitbakkit*.

ب ك ت ت

بكتّة *bakitta[1]* <It *bacchetta*> /n pl *-aat*/ **1** action lever on a piano. **2** *[arch]* moulding.

بكتّة *bakitta[2]* <prob Engl> /n pl *-aat*/ packet.

ب ك ت ر ي
بكتريا *baktirya* <Engl> /n/ bacteria.

ب ك ت و –
بكتوني *bakatuuni* /n pl *-haat*/ *[elec]* fixture for downward slanting wall-lamp.

ب ك د ب –
بكادوبرا *bakadubra* <prob Engl> /n pl *-aat*/ *[theat]* backdrop.

ب ك ر [1]
بكرة *bakra* /n pl *-aat*/ young she-camel.
بكري *bakri: manfiyyit il-bakri* area in north-east Cairo.
البكريّة *ʔil-bakriyya* /prop n/ a Sufi order.
بكره *bukra* /adv/ **1** tomorrow. *ɦa-tiigi n-nahar-da walla bukra* are you coming today or tomorrow? *baɛd[i] bukra* the day after tomorrow. *baɛd[i] baɛd[i] bukra* three days from now. *bukra nismaɛ wi-baɛdu nfuuf* ≈ we shall wait and see. ‖ *ʔin-nahar-da ɋabl[i] bukra* as soon as possible, better sooner than later. **2** some time (soon) in the future. *bukra faɛr-ak yiṭwal taani* your hair will grow again soon enough!
بكر *bikr* **1** /n pl *bakaari*/ first-born child. *ɛuɋbaal il-bakaari* ≈ we look forward to the birth of your children (said to a newly-married couple). **2** /adj/ **2a** /pl *bakaara* or invar/ virgin. *banaat bikr* or *banaat bakaara* virgins. *ʔarḍ[i] bikr* virgin soil. **2b** /invar/ unfertilized, unpollinated. ‖ *mayyit ṭurfi bikr* pickling solution containing salt and vinegar, but no spices.
بكري *bikri* /adj */ first-born.
بكريّة *bikriyya* /n pl *-aat*/ **1** one giving birth for the first time. **2** virgin.
بكارة *bakaara* /n/ **1** virginity. **2** maidenhead. *faḍḍ[i] bakarit-ha* he deflowered her.
أبكر *ʔabkar* /el/ more/most early.
بكور *bukuur* /n/ earliness, being early. *ʔil-baraka fil-bukuur* (God's blessing is in rising early) the early bird catches the worm.
بكور *bakuur* /coll n/ *[Chr]* first-fruit(s).
باكورة *bakuura* /n pl *-aat*/ first-fruit, first result. *bakuurit ʔintaag il-maṣnaɛ kaanit muʃarrifa* the first products of the factory did it great credit. *yoom il-bakuura [Jud]* Shabuoth.
باكر *baakir* **1** /adv/ tomorrow. *ɦa-niigi ṣabaaḥ baakir* we'll come tomorrow morning. **2** (also *buxuur baakir*) /n/ *[Chr]* matins. *rafaɛ (buxuur) baakir* to say the service of matins (with its rituals, of a priest).

بكّر *bakkar* /vi/ **1** to be (ready) early in the morning. *laazim tibakkaru ʔiza kuntu ɛawziin tifuufu furuuq iʃ-ʃams* you'll have to be ready early if you want to see the sunrise. **2** to produce one's first child. *ɦa-tbakkar bi-walad ʔin ʃaaʔ allaah* her first child will be a boy, God willing. - /vt/ **3** to blow old smoke out of (a water-pipe). - vn *tabkiir*; ava *mibakkar*.
اتبكّر *ʔitbakkar* /vi/ to be blown clear of old smoke (of a water-pipe). - iva *mitbakkar*.
ابتكر *ʔibtakar* /vt/ to invent, create, originate, innovate. - vn *ʔibtikaar*; ava *mibtikir*; pva *mubtakar*.
مبتكرات *mubtakaraat* /pl n/ fashions, creations. *mubtakaraat il-muusim* the season's fashions.

ب ك ر [2]
بكر *bakar* /coll n/ spool(s), reel(s), pulley(s), block(s). ‖ *xeeṭ bakar* (sewing) thread.
بكرة *bakara* /unit n, pl *-aat*/ a spool, a reel, a pulley, a block.
بكّار *bakkaar* = *bakar*.
بكّارة *bakkaara* = *bakara*.

ب ك ر [3] see ب ك ا ر : *bikaar*

ب ك ر ب –
بيكربونات *bikarbunaat* <Fr> /n/ bicarbonate.

ب ك ر ج
بكرج *bakrag* <T *bakraç*> /n pl *bakaarig*/ teapot.

ب ك ر ر
بكرر *bakrar* /vi/ **1** to swell (of the eyes). **2** to goggle (of, or with, the eye). *ma-tbakrar-lii-ʃ bi-ɛenee-k kida* don't goggle at me like that! - vn *bakrara*; ava *mibakrar*.

ب ك ر ي ك
بكريك *bikriik* <Fr>: *ɦamḍ il-bikriik* picric acid.

ب ك س [1]
بكس *buks[1]* <Engl> /n/ **1** /pl *-aat, ʔabkaas, bikaas*/ box, blow, punch. **2** /no pl/ (sport of) boxing. *taɛaala nilɛab buks* let's do a little sparring.
بكّس *bakkis* /vi/ to throw punches. *ɋaɛad yibakkis-lu lamma wiɋiɛ min ṭuul-u* he kept on punching him until he fell flat. - vn *tabkiis*; ava *mibakkis*.
اتبكّس *ʔitbakkis* /vi/ to be punched. - iva *mitbakkis*.
باكس *baakis* /vt/ **1** to box. **2** to have a fist fight with. - vn *mibaksa*; ava *mibaakis*.
اتباكس *ʔitbaakis* /vi/ **1** to box each other. **2** to have a fist fight with each other. - ava *mitbaakis*.

² ب ك س
بكس، بوكس *buks*² <Engl> /n/ **1** (also *buksⁱ furd*) police wagon for transporting prisoners, black Maria, paddy wagon. **2** (also *ɛarabiyya buks*) covered wagon. **3** (also *fanṭa buks*) vanity case or the like. **4** *[elec]* terminal box.

– ب ك س ت
باكستان *bakistaan* /prop n/ Pakistan.
باكستانى *bakistaani* **1**/n */ a Pakistani. **2** /adj/ Pakistani.

¹ ب ك ش
بكش *bakaʃ* /n/ trickery, bluffing.
بكّاش *bakkaaʃ* /n */ bluffer.
بكّش *bakkiʃ* /vi/ to act fraudulently, fool, bluff. *ma-tbakkiʃ-fⁱ ɛala ʔaxuu-k* don't take in your brother! - vn *tabkiiʃ*; ava *mibakkiʃ*.
مبكّشاتى *mibakkaʃaati* /n pl *-yya*/ = *bakkaaʃ*.
اتبكّش *ʔitbakkiʃ* /vi/ (impersonal) passive of *bakkiʃ*. *mumkin yitbakkiʃ ɛaleek* you may be fooled. - iva *mitbakkiʃ*.

² ب ك ش
بكشة *ßukʃa* <T *bokça*> /n pl *-aat*/ round water container of a *gooza* (see Pl.I, 10).

³ ب ك ش see ب ك ا ش : *bikaaʃ*

ب ك ش ر
بكشوريّة *bakʃuriyya* /n/ con game.

ب ك ش ى ن
بكاشين *bakaʃiin* <It *beccaccino*> /coll n/ snipe.
بكاشينة *bakaʃiina* /unit n, pl *-aat*/ a snipe.

¹ ب ك ك
بكّ *bakk (u)* **1** /vt/ to ooze, exude. *b-aḥuṭṭⁱ raaq miʃmiʃ wi-raaq sukkar w-asiib-u l-ḥaddⁱ ma ybukkⁱ mayyit-u* I put a layer of apricots and a layer of sugar and leave it till it produces juice. ‖ *wiʃʃ-u ḥa-ybukk id-damm* his face is flushed. **2** /vi/ to flow. *ʔid-dimɛa bakkit min ɛeen-u* tears streamed from his eyes. - vn *bakk, bakakaan*; ava *baakik*; pva *mabkuuk*.
بكّة *bakka* /inst n, pl *-aat*/ a squirt, a drop.
اتبكّ *ʔitbakk* /vi/ to flow, be exuded. - ava/iva *mitbakk*.

² (ب ك ك)
بكّ *bukk* <prob Engl *pocket-book*> /n pl *-aat*/ small money purse.

بكّة *bikka* <It *becco*> /n pl *-aat, bukuuk*/ small nozzle, jet.

ب ك ل
بوكلة *bukla* <prob Fr *boucle*> /n pl *-aat, bukal*/ **1** lock (of hair), ringlet. **2** buckle.

ب ك ل ا ه
بكلاه *bakalaah* <It *baccalà*> /n/ dried and salted cod fish (eaten particularly during Lesser Bairam).

– ب ك ل ر
بكالوريا *bakalurya* <Fr *baccalauréat*> *[obsol]* secondary school diploma.
بكالوريس *bakaluriyuus, bakaluryoos* /n pl *-aat*/ bachelor's degree in science or commerce.

ب ك ل و
بكلو *bikalooh* <prob Fr> /n pl *-aat*/ piccolo.

ب ك ل ى س
بكوليس *bukuliis* <Fr *pied à coulisse*> /n pl *-aat*/ small-size Vernier caliper.

ب ك ل ى ه
بوكليه *bukleeh* <Fr *bouclé*> /adj invar/ curly (of hair).

¹ ب ك م
بكم *bukm* /n/ dumbness.
بكم *bakam* /n/ dumbness.
أبكم *ʔabkam* /adj, fem *bakma*, pl *bukm*/ dumb.

² ب ك م see ب ا ك م : *baakim*

ب ك ن see ب ك ا ن : *bikaan*

– ب ك ن ب
بكنبودر *bakinbawdar* or *bikinbawdar* <Engl> /n/ baking-powder.

¹ ب ك ى
بكى *baka (i)* /vi/ to weep, lament. *bakit bi-damɛ il-ɛeen* she cried her eyes out. *ʔiʃkii-li w-ʔana ʔabkii-lak* let's commiserate together. *kutr il-ḥuznⁱ yɛallim il-buka [prov]* much sadness teaches weeping. - vn *buka, bika*; ava *baaki*.
¶ *baka ɛala* to care for, as in *miʃ baaki ɛala ḥaaga* not giving a damn, *b-abki ɛala-bn-i wi-bn-i b-yibki ɛala l-ɣariib [prov]* I care for my son, but my son cares for the stranger (i.e. is ungrateful and fails to reciprocate),

ʃilli yibki ɛad-dinya ydawwar ɛaleeha [prov] he who cares about worldly things must look for them.
بكّاى *bakkaay* /adj */ given to weeping, always snivelling.
مبكى *mabka: ħaaʃiṭ il-mabka* the Wailing Wall (in Jerusalem).
بكّى *bakka* /vt/ to cause to weep. -vn *tabkiyya*; ava *mibakki*.
اتباكى *ʃitbaaka* /vi/ to pretend to weep or be sad *bi-yitbaaku ɛal-ħurriyya ɛaʃaan yidħaku ɛan-naas* they pretend to be sad about (lost) freedom in order to deceive the people. -ava *mitbaaki*.

ب ك ى ( ) [2]
باكية *bakya*[1] /n pl *bawaaki*/ **1a** arch. **1b** arcade. ‖ *ʃil-bawaaki* street in Ataba famed for its arcades. **2** strip of metal bent into a curve.
باكية *bakya*[2] /n pl *-aat*/ casing for a drawstring or cord.

ب ك ى ا
بيكيا *bikyà* shortened form of *rubabikya* (q.v.).

ب ك ى ن [1]
بكين *bikiin* /n/ Peking.
بكينى *bikiini*[1] /adj/ from or pertaining to Peking. *ʃil-baṭṭ il-bikiini* Peking duck.

ب ك ى ن [2]
بيكينى *bikiini*[2] /n/ bikini.

ب ك ى ه ( )
بيكيه *bikeeh* <Fr *piqué*> /n/ **1** quilting. **2** /adj invar/ quilted.
بوكيه *bukeeh* <Fr> /n pl *-aat*/ bouquet (usually large and arranged in a high basket stand).

ب ل
بل *balʔ* /conj/ **1** rather. *bi-yurfuḍ il-inħirafaat di bal wi-yqawim-ha* he rejects these deviations, or rather, resists them. **2** /w preceding neg/ but rather. *ʃin-nuqṭa ma b-tintifir-ʃ*[i] *bal bi-tkawwin* the spot does not disperse, but rather builds up.

ب ل ا
بلا *bala*[1] **1** /prep/ without. *bala ɢafya* no kidding. *ʈiliɛ min il-muulid bala ħummuṣ* (he left the *muulid* without any chick-peas) he gained nothing from what should have been a profitable enterprise. **2** particle signalling prohibition or disapproval. *bala kalaam faariɤ* stop this nonsense! *bala xeeba* don't be stupid! -/repeated for emphasis/ *bala ʃadab bala waksa* damn literature - it's all a farce!

ب ل اج
بلاج *bilaaj* <Fr *plage*> /n pl *-aat*/ beach.

ب ل ا د
بولاد *bulaad*↓ <P *pûlâd*> /n/ steel. *sadɤ-u wala l-bulaad* (his cheek surpasses steel (in hardness)) ≈ he is very thick-skinned.

ب ل ا ش see ب ل ش : *balaaʃ*

ب ل ا ط س
بيلاطس البنطى *bilaaṭus il-bunṭi* /prop n/ Pontius Pilate.

ب ل ا ق
بولاق *bulaaɢ* /prop n/ Boulak, a populous quarter in Cairo bordered on the west by the Nile. ‖ *dool wala btuuɛ bulaaɢ* they are worse than people from Boulak (i.e. they behave in an extremely rowdy manner). -*bulaaɢ id-dakruur* low-class area in the west of Greater Cairo.
بولاقى *bulaaɢi* /adj */ pertaining to Boulak. *ʃit-ṭirɛa l-bulaɢiyya* the Boulak Canal (later filled in and made into a street, it ran from el-Qulali district north through Shubra).

ب ل ال
بلال *balaal: ħalaal-i balaal-i* my own property.

ب ل ب اه
بلبياه *bilibaah: ʃuɤl il-bilibaah* deception, sleight of hand. *ɢamalu ɢalayya ʃuɤl il-bilibaah* they put one over on me.

ب ل ب ط
بلبط *balbaṭ* /vt and vi/ to splash about (in shallow water). - also *baṭbaṭ*. - vn *balbaṭa*; ava *mibalbaṭ*.
اتبلبط *ʃitbalbaṭ* = *balbaṭ*. -ava *mitbalbaṭ*.

ب ل ب ع
بلبع *balbaɛ* /vt/ **1** to make into small round balls. **2** to nibble at (food). **3** to eat (opium or similar drugs). -vn *balbaɛa*; ava/pva *mibalbaɛ*.
بلبوع *balbuuɛ* /n pl *balaabiɛ, balabiiɛ*/ **1** small pill-like ball. **2** tablet, pill (especially of drugs such as opium).
بلبوعة *balbuuɛa* = *balbuuɛ*.
اتبلبع *ʃitbalbaɛ* /vi/ passive of *balbaɛ*. -iva *mitbalbaɛ*.

[1] ب ل ب ل
بلبل *balbil*[1] /vt/ to throw into confusion. *ma-tbalbil-ʃ*[i] *ʕafkaar-i* don't confuse me! *ʕawziin yiʒmilu balbala fil-balad* they're trying to spread confusion in the country. - vn *balbala*; ava/pva *mibalbil*.
اتبلبل *ʕitbalbil* /vi/ to become muddled, be thrown into confusion. - ava/iva *mitbalbil*.

[2] ب ل ب ل
بلبل *balbil*[2] /vi/ to emit mating cries (of a male goat). - vn *balbala*; ava *mibalbil*.

[3] (ب ل ب ل)
بلبل *bulbul* <P *bulbul*> /n pl *balaabil*/ nightingale.
بلبلة *bilbila* <Copt> /n pl *balaabil*/ almost any small rounded hanging object (e.g., bobble, plug cock of a tap, small knob, small round bell).

(ب ل ب و ص)
بلبوص *balbuuṣ*[1] /n pl *balabiiṣ*/ *[rur]* ember. - also *baṣbuuṣ*.
بلبوص *balbuuṣ*[2] /adj pl *balabiiṣ*/ stark naked. - /adverbially/ *ʈallaʕ-ha balbuuṣ* (1) he brought her out stark naked. (2) he (made a deal with her that) left her empty-handed.

ب ل ب ى ف
بلوبيف *bulubiif* <Engl *bully beef*> /n/ corned beef or mutton.

ب ل ت ت
بلتّة *balitta* <It> /n pl *-aat*/ artist's palette.

ب ل ت ك –
بلتكانة *baltakaana* <It *baldacchino*> /n pl *-aat*/ frame supporting a pelmet or canopy, baldaquin. - also *baldakaana*.

ب ل ت و ه
بلاتوه *balatooh* <Fr *plateau*> /n pl *-aat*/ (film) set, studio.

ب ل ت ى ك
بولوتيكة *bulutiika* <perh T *politika* from Gr> /n/ smooth talking, glib talking, cant.

ب ل ت ى ن
بلاتين *bilatiin* <Fr *platine*> /n/ **1** platinum. **2** *[dent]* amalgam. **3** = *bilatiina*.

بلاتينة *bilatiina* /n pl *-aat, bilatiin*/ *[auto]* contact breaker. - also *ʃablatiina*.

[1] ب ل ج see ب ل أ ج : *bilaaj*

[2] ب ل ج see ب ل ى ج : *buliiga*

ب ل ج ى ك
بلجيكا *baljiika* /prop n/ Belgium.
بلجيكى *baljiiki* **1** /adj */ Belgian. **2** /n */ a Belgian.

ب ل ح
بلح *balaḥ* /coll n/ date(s). ‖ *balaḥ iʃ-ʃaam* finger-shaped pastries made of deep-fried leavened batter, soaked in syrup. - *la ʈaal balaḥ iʃ-ʃaam wala ʕinab il-yaman* ≈ he did not manage to get either of the things he wanted. - *wikaalit il-balaḥ* scrap market located in Boulak. - *ʕaraq balaḥ* alcoholic drink distilled from dates. - *balaḥ il-baḥr* mussel(s).
بلحة *balaḥa* /unit n, pl *-aat*/ **1** date. *zayy il-balaḥa fiz-zoor* like a date in one's throat (of something intolerable). **2** date-shaped object. *balaḥit goozit iṭ-ṭiib* a nutmeg. *balaḥteen il-miʕza* goat's pendants. *lamba balaḥa* small elongated light bulb (used mostly for chandeliers). *taxriiza balaḥa [naut]* back-splice. **3** motif in tent appliqué designs (see Pl.H, 10).
بلحاية *balaḥaaya* = *balaḥa*.
بلّاح *ballaaḥ* /n/ date-grower. *sana lil-fallaaḥ wi-sana lil-ballaaḥ [prov]* one year the date crop is good, the next the good luck goes to the farmer ≈ good luck moves from one to another.
بلّح *ballaḥ* /vi/ to produce dates (of a palm tree). - vn *tabliiḥ*; ava *miballaḥ*.

[1] ب ل ذ
بلد *balad* /fem n, pl *bilaad*/ **1** /sing and pl used interchangeably/ country, nation. *laazim nixalli wlad-na yḥibbu balad-hum* we must make our children love their country. *quṭn*[i] *blad-na ʃaḥsan quṭn*[i] *fil-ʕaalam* the cotton produced by our country is the best in the world. *bilaad iʃ-ʃaam* the Levant. *bilaad barra* abroad. ‖ *(ṭiliʕ fi-wiʃʃ-u) bilaad allaah li-xalq allaah* (he set off into) the big wide world (without any particular plan). - *fi-ʃaaxir bilaad il-muslimiin* at the ends of the earth. **2** (home) village, town. *ʃana raayiḥ il-balad* I'm going to my village. *kull*[i] *balad fiiha nuur* every town has electricity. *ʃil-balad illi twaddi ʃaḥsan mi-lli tgiib* ≈ we can well do without him! ‖ *ʃibn*[i] *balad* (1) native, not a foreigner. *da miʃ xawaaga da-bn*[i] *balad* he's not a foreigner, he's a

local. (2) one embodying the good qualities of the traditional classes, good sort, nice guy. - *da-nta baqeet ibn[i] balad* (1) you've become a man of the world. (2) you've become easy-going.

بلدى *baladi* /adj usu invar/ **1a** in traditional Egyptian style. *ṭabbaax baladi* local Egyptian-style cook. *raqṣ[i] baladi* local Egyptian-style dancing. *baladi ya niɛnaaɛ [vendor's cry]* wholesome mint! *waṣfaat baladi* (or *baladiyya*) folk remedies. *bi-ysammuu bil-baladi* ... the native Egyptian name for it is .... ‖*ɛeef baladi* coarse whole-meal bread. -*samaad baladi* manure. -*samn[i] baladi* clarified butter. -*diraaɛ baladi* linear measure equal to 0.58 metres. **1b** native to Egypt (as opposed to *ruumi* or *ʔafrangi*). ‖*gazar baladi* dark red variety of carrot. **2** common or garden, ordinary. *muftaaḥ baladi* an ordinary spanner. *kalb[i] baladi* a street dog. *manga baladi* a variety of small mango. **3a** of the (conservative) lower class (as opposed to what is modern and affected by external influence). *ʔil-ḥitta lli-ḥna sakniin fiiha baladi fwayya* the area in which we live is a bit low-class. **3b** vulgar. *sitt[i] baladi ɋawi* a very vulgar woman.

بلديّة *baladiyya* /n pl -*aat*/ municipality.

بلديّات *baladiyyaat* /n/ person or persons coming from the same neighbourhood (as each other or as s.o. else). *dool baladiyyaat - ma tidxul-f[i] benhum* these people are from the same neighbourhood - don't interfere with them. *ʔir-raagil baladiyyaat-ak miʃ ḥa-ygib-ha l-barr* that man from your village is not going to be reasonable. *baladiyyaat-ak waṣalu* the people from your home village have arrived. ‖ *ʔabu l-baladiyyaat [deris]* an Upper Egyptian.

بلدى *baladii-* /n, always w pron suff/ = *baladiyyaat*.

ب ل د [2]

بلادة *balaada* /n/ sluggishness, dullness, stupidity. *balaada fil-ʔiḥsaas* insensitivity.

بليد *baliid* /adj pl *bulada*/ sluggish, dull, stupid. *ḥiggit il-baliid masḥ it-taxta [prov]* the dull pupil busies himself cleaning the blackboard (so as to avoid answering questions) ≈ the incompetent cover up their inability by an appearance of activity.

أبلد *ʔablad* /el/ more/most dull or stupid.

بلّد *ballid* /vi/ to become sluggish, apathetic or dull. - vn *tabliid*; ava *miballid*.

اتبلّد *ʔitballid* = *ballid*. *taballud fil-ʔafkaar* apathy. - vn *taballud*; ava *mitballid*.

استبلد *ʔistablid* /vt/ **1** to consider sluggish or stupid. **2** to select for stupidity. — /vi/ **3** to be unresponsive, be hard to handle (especially of animals). - vn *ʔistiblaad*; ava *mistablid*.

ب ل د [3] see ب ل ا د : *bulaad*

ب ل د ف – see ب ر د ف – : *biladifeer*

ب ل د ك –

بلدكانة *baldakaana* <It *baldacchino*> /n pl -*aat*/ frame supporting pelmet or canopy, baldaquin. - also *baltakaana*.

ب ل د و –

بلدوزر *buldoozar* <Engl> /n pl -*aat*/ bulldozer.

ب ل د و س

بلدوس *balduus, baladoos* /n pl -*aat*/ *[mech]* portable lamp.

ب ل ز see ب ل و ز : *biluuza*

ب ل س see ب ل ى ص [1] : *buliis, buliisi*

ب ل س ا ن

بلسان *balasaan* /n/ *[bot]* elder.

ب ل س ت ر

بلاستر *bilastar* <Engl> /n/ plaster, medical adhesive tape.

ب ل س ت –

بلاستيك، بلاستك *bilastik, balastik, balastiik* <Engl> /n/ **1** plastic. **2** plasticized paint or varnish. *balastiik il-mayya* plastic paint to be mixed with water. — /adj invar/ **3** plastic. *kiis bilastik* a plastic bag. *ʔil-ʔarḍiyyaat il-bilastik* plasticized floor varnishes.

ب ل س م

بلسم *balsam* /n/ balsam.

ب ل س ن see ب ل س ا ن : *balasaan*

ب ل س ى ر

بلاسير *bilasiir* <Fr *placeur*> /n pl -*aat*/ cinema usher.

(ب ل س ى ه)

بلاسيه *bilaseeh* <Fr *placier*> /n pl -*aat*/ **1** sales representative. **2** cinema usher. - also *ʔablaseeh*.

بليسيه *biliseeh* <Fr *plissé*> /adj invar/ **1** pleated. **2** ribbed (of knitting).

ب ل ش

بلاش *balaaf* **1** /w pron suff, *balaaf min-*/ particle signalling **1a** prohibition or the urging of discontinuance. *balaaf fitiima* no insults! *balaaf hizaar* stop fooling around! *balaaf yiruuḥu* they had better not go. *balaaf tixalli mraat-ak tiṭlaʕ min il-beet* you ought not to let your wife go out of the house. *ʔagib-lak il-kitaab walla balaaf* shall I bring you the book or not? *balaaf minnu* let's do without it! ‖*walla balaaf* par excellence, as in *ʔahu kida l-ɤuna walla balaaf* now that's what I call singing! **1b** retraction of something previously stipulated. *balaaf il-ɋalam - haat ik-kitaab bass* never mind about the pencil - just bring the book. *miʃ ɋadra ʔaakul ir-ruzz. - balaaf baɋa* 'I can't eat the rice.' 'O.K. don't.' ‖ *ʔaḥsan min balaaf* better than nothing. **2** /adj invar/ free. *ʔil ḥagaat il-balaaf ma-ḥadd[i]-ʃ bi-yiḥtirim-ha* no-one properly values things that are free. — /elliptically/ *ʔil-balaaf kattar minnu [prov]* take amply from what is free. *bi-balaaf* (also *bi-balaafi*) for free, gratis. — /adverbially/ *ʔiddaa-ni k-kitaab balaaf* he gave me the book free. *ʔilli yiigi balaaf yiruuḥ balaaf* ≈ easy come easy go. ‖*ya balaaf* how cheap! (often used ironically). - *raaḥ balaaf* to come to nothing, as in *taʕab-u raaḥ balaaf* his effort was in vain, *ʔil-ʕamlaa-di miʃ rayḥaa-lak balaaf* you won't get away with what you've done.

بلّوشي *balluufi [joc]* /adv/ free, for nothing. *kalt[i] balluufi* I ate gratis.

ب ل ش ف

بلشفي *bulʃufi* <perh Engl> /pl *balaffa*/ **1** /n/ communist, bolshevik. **2** /adj/ **2a** communist. **2b** ruthless.

بلشف *balʃif* /vt/ **1** to convert (s.o.) to communism. **2** to cause (s.o.) to be corrupt or immoral. **3** to brainwash. - vn *balʃafa*; ava/pva *mibalʃif*.

اتبلشف *ʔitbalʃif* /vi/ **1** to become a communist. **2** to be corrupted. **3** to be brainwashed. - ava/iva *mitbalʃif*.

ب ل ص [1]

بلص *balaṣ[1] (u)* /vt/ to bribe. *ḥ-abluṣ-u rubʕ[i] gneeh* I'll bribe him with twenty-five piastres. - vn *balṣ*; ava *baaliṣ*; pva *mabluuṣ*.

بلصة *balṣa* /unit n, pl *-aat*/ a bribe.

اتبلص *ʔitbalaṣ[1]* /vi/ to be bribed. - iva *mitbiliṣ*.

انبلص *ʔinbalaṣ* = *ʔitbalaṣ[1]*. - iva *minbiliṣ*.

ب ل ص [2]

بلص *balaṣ[2] (a)* /vt/ *[dent]* to form, shape (a crown). - vn *balṣ*; ava *baaliṣ*; pva *mabluuṣ*.

بلص *balṣ* /n/ *[dent]* crown-forming machine.

اتبلص *ʔitbalaṣ[2]* /vi/ *[dent]* to be formed, be shaped (of a crown). - iva *mitbiliṣ*.

ب ل ص [3]

بالوص *baluuṣ* /n/ **1** marrow (of bones). **2** /pl *bawaliiṣ*/ mouthpiece of a wind instrument (see Pl.J, 17).

ب ل ص [4] see ب ل ل ا ص : *ballaaṣ*

ب ل ص [5] see ب ل ى ص : *buliiṣ, buliiṣi, buliiṣa*

ب ل ض م

بلضم *balḍam* /vi/ **1** to scowl. *maa-lak mibalḍam kida - ma-tidḥak maʕaana* why are you scowling so - why not laugh along with us? **2** to stand up (to s.o. bigger than oneself). *naadir ʔinn il-muwaẓẓaf yibalḍam maʕa l-mudiir* only rarely does an employee stand up to the director. - vn *balḍama*; ava *mibalḍam*.

ب ل ط [1]

بلط *biliṭ* /adj */ **1** blunt. *ʔazmiil naggaar bass[i] biliṭ* a carpenter's chisel, but blunt. **2** boorish, thick-skinned.

بلاط *balaaṭ* /n/ **1** /coll n/ tile(s). ‖ *ʔil-balaaṭ il-malaki* the royal court. - *gazzaar il-balaaṭ* head butcher (in a slaughterhouse). - *sukkar balaaṭ* sugar formed into large slabs. - *ʔeeh yaaxud ir-riiḥ min il-balaaṭ [prov]* (what can the wind take from the tiles?) there's nothing to be gained from it. - *ʕal-balaaṭ* see *balaaṭa*. **2** unploughed land.

بلاطة *balaaṭa* /n pl *-aat*/ **1** /unit n/ a tile. ‖*ʕala balaaṭa* bluntly, as in *gibna-haa-lu ʕala balaaṭa* we didn't mince our words with him. - *ʕala l-balaaṭa* (also *ʕal-balaaṭ*) (1) stripped bare. (2) flat broke. **2** slab (of concrete). **3** surface in a mud oven upon which bread is baked (see Pl.C, 9).

بلّط *ballaṭ[1]* **1** /vt/ to tile, pave. *lissa ma-ballaṭuu-ʃ ir-raṣiif* they still haven't paved the sidewalk. **2** /vi/ to be obstinate, refuse to budge. *ʔil-ʕarabiyya ballaṭit fis-sikka* the car came to a standstill on the way. *ballaṭit fil-xaṭṭ* she wouldn't co-operate. ‖*da mballaṭ-li fil-xaṭṭ* he's refusing to co-operate. - *ballaṭ ʕal-fluus* he hung onto the money. - vn *tabliiṭ*; ava/pva *miballaṭ*.

تبليطة *tabliiṭa* /inst n, pl *tabaliiṭ*/ prepared surface of wooden planks (used, e.g., for a ramp or temporary bridge or roof).

مبلّط *muballiṭ* /n */ tiler.

اتبلّط *ʔitballaṭ* /vi/ to be paved, be tiled. - iva *mitballaṭ*.

استبلط *ʔistablaṭ* /vt/ to consider (s.o.) thick-skinned. - vn *ʔistiblaaṭ*; ava *mistablaṭ*.

ب ل ط [2]
بلطة *bulṭa* <It *volta*> /n pl *bulaṭ/ [naut]* **1** tack, one of a series of tacking movements. **2** short voyage. ‖ *ḍarab bulṭa* he took a stroll, he bummed around.
بلّط *ballaṭ*[2] /vi/ *[naut]* **1** to tack, beat about. **2a** to beat up and down (outside a harbour). **2b** to lie (off a harbour) with engines running waiting to dock. - vn *tabliiṭ*; ava *miballiṭ*.

ب ل ط [3]
بلّوط *balluuṭ* /coll n/ oak(s).
بلّوطة *balluuṭa* /unit n, pl *-aat*/ an oak.

ب ل ط [4]
بلطة *balṭa* <T *balta*> /n pl *bulaṭ, balṭaat*/ billhook, axe, hatchet. *waxid-ha ḅil-balṭa* he acts tough, he strong-arms his way around. See further under ب ل ط ج

ب ل ط ج see also ب ل ط [4]
بلطجى *balṭagi* <T *baltacı*> /n pl *-yya*/ **1** thug, bully. *laazim niḥarras minnu - da waad balṭagi* we must watch out for him - that kid is a bully. **2** *[mil, obsol]* pioneer.
بلطج *balṭag* /vi/ **1** to become recalcitrant, become delinquent. *mibalṭaga ɛal-ʔugra* she's holding out on the rent. **2** to play truant (from school). - vn *balṭaga*; ava *mibalṭag*.

ب ل ط و
بالطو *balṭu* <Fr *paletot*> /n pl *balaaṭi*/ overcoat.

ب ل ط ي
بلطى *bulṭi* /n/ **1** /coll/ Nile perch (Tilapia sp.). **2** /pl *balaṭwa*/ *[slang]* person from Port Said.
بلطيّة *bulṭiyya* /unit n, pl *-aat*/ a *bulṭi* fish.
بلطيّاية *bulṭiyyaaya* = *bulṭiyya*.

ب ل ظ see ب ل و ظ : *baluuẓa*

ب ل ع
بلع *balaɛ* (a) /vt/ to swallow. *bi-yiblaɛu n-nafas ɛafaan yibayyinu ʔinnuhum gidɛaan* they take in the smoke to show that they are tough guys. ‖ *ḥaaga miʃ mabluuɛa* something unacceptable. - *baaliɛ radyu* ≈ very talkative. - *balaɛ riiq-u* (1) to (take a short break to) catch one's breath. (2) to be reassured. - vn *balɛ, balaɛaan*; ava *baaliɛ*; pva *mabluuɛ*.
بالوعة *baluuɛa* /n pl *-aat, bawaliiɛ*/ drain.
بلاعة *ballaaɛa* /n pl *balaliiɛ, ballaɛaat*/ **1** drain. ‖ *ballaaɛit filuus* (1) a squanderer of money. (2) a drain on one's financial resources. **2** plug-hole.
بلّوعة *balluuɛa* /n pl *-aat*/ sewer, drain.
بلّيعة *bulleeɛa* /n pl *-aat*/ = *balluuɛa*.
مبلع *mablaɛ* /n pl *mabaaliɛ*/ *[abus]* mouth, gob.
اتبلع *ʔitbalaɛ* /vi/ to be swallowed. ‖ *raagil ma-yitbiliɛ-ʃ*[i] *min iz-zoor* a man who is hard to take, an insufferable man. - iva *mitbiliɛ*.
اتبلع *ʔinbalaɛ* = *ʔitbalaɛ*. - iva *minbiliɛ*.
بلّع *ballaɛ* /vt/ **1** to cause to swallow. *ballaɛt-u kalaam-u* I made him take back his words. **2** to wash down (e.g., food). *haat kubbaayit mayya ʔaballaɛ biiha l-luqma* get me a glass of water to help me swallow the food. **3** to bribe. - vn *tabliiɛ*; ava/pva *miballaɛ*.
اتبلّع *ʔitballaɛ* /vi/ **1** to be made to swallow. **2** to be washed down (of, e.g., food). **3** to be bribed. - iva *mitballaɛ*.

ب ل ع م [1]
بلعم *balɛam* /vi/ to blossom. - vn *balɛama*; ava *mibalɛam*.

ب ل ع م [2]
بلعوم *balɛuum* /n pl *balaɛiim*/ gullet, oesophagus.

ب ل غ [1]
بلغ *balaɣ (u)* /vt/ **1** to reach (of news etc.). *balaɣ-na xabar wafaat-u* news of his death reached us. **2** to attain. *ʔin ʃa-lla tubluɣ ʔamal-ak [women]* may you realize your hopes! *lissa ma-balaɣ-ʃ*[i] *sitt*[i] *sniin* he's not yet six years old. — /vi, also imperf *yiblaɣ*/ **3** to reach puberty. - vn *buluuɣ, mablaɣ, bilaaɣ*↓; ava *baaliɣ*.
بلوغ *buluuɣ* /n/ puberty.
بلاغ *bilaaɣ* = *buluuɣ*.
بلاغ *balaaɣ* /n pl *-aat*/ **1** *[leg]* official complaint to the police or a magistrate. **2** communiqué. **3** *[obsol]* roll of attendance (at el-Azhar University).
بالغ *baaliɣ*[1] **1** /n */ adult. **2** /adj */ extreme, extensive. *garḥ*[i] *baaliɣ* serious wound.
بلاغة *balaaɣa*↑ /n/ rhetoric. *naḥw*[i] *w-balaaɣa* grammar and rhetoric.
بلاغى *balaaɣi* /adj/ rhetorical. *ṣuwar balaɣiyya* rhetorical images.

بليغ *baliiɣ* /adj * and pl *bulaɣa*/ eloquent.
أبلغ *ʔablaɣ*[1] /el/ more/most eloquent.
مبلغ *mablaɣ* /n pl *mabaaliɣ*/ **1** amount, sum (usually of money). *ʔiddet-lu ʃiik bi-mablaɣ ɛafara gneeh* I gave him a cheque to the amount of ten pounds. **2** (large) amount, (great) extent. *ʔil-masaafa kaanit mablaɣ* it was a considerable distance. *ɛafaan tiɛrafi mablaɣ*

ħubb-i liiki so that you should know how much I love you.

بلّغ *ballaɤ* /vt/ **1** to tell or communicate (s.th.) to (s.o.). *ħadd[i] ballaɤ-ak il-xabar* has anyone told you the news? **2** to report (an offence etc.). *ballaɤt is-sirqa lil-buliiṣ* I reported the theft to the police. **2b** to report to (the police etc.). *ballaɤt il-buliiṣ bis-sirqa* I reported to the police about the theft. **3** to cause the attainment of. *ʈuulit il-baal tiballaɤ il-ʕamaal [prov]* ≈ everything comes to him who waits. -vn *tabliiɤ*; ava *miballaɤ, muballiɤ↑*.

مبلّغ *muballiɤ* /n */ informant.

بالغ *baaliɤ[2]* /vi/ to exaggerate. *ʕinta kull[a] ħaaga tbaaliɤ fiiha* you exaggerate in everything. *di ʕarqaam mubaalaɤ fiiha ʃwayya* these figures are somewhat inflated. -vn *mibalɤa, mubalɤa*; ava *mibaaliɤ, mubaaliɤ*; pva *mubaalaɤ↑*.

أبلغ *ʕablaɤ[2]↑* = *ballaɤ* 1. -vn *ʕiblaaɤ*.

ب ل غ [2]

بلغة *bulɤa, balɤa* /n pl *bulaɤ, bulɤaat, balɤaat*/ pair of men's leather backless slippers (see Pl.F, 6). ‖*manquuɛ il-bulaɤ* poor quality liquor, rot-gut.

ب ل غ ر

بلغاريا *bulɤarya* /prop n/ Bulgaria.

بلغارى *bulɤaari* **1** /adj */ Bulgarian. **2** /n */ a Bulgarian. **3** /n, no pl/ the Bulgarian language.

ب ل غ م

بلغم *balɤam* /n/ mucus, phlegm, sputum.

بلغمى *balɤami: mazaag* (or *ʈabɛ) balɤami* a phlegmatic temperament (one of the four cardinal humours).

ب ل ف [1]

بلف *balaf (i)* <poss Engl> /vt/ to bluff, take in. -vn *balf, balafaan*; ava *baalif*; pva *mabluuf*.

بلفة *balfa* /inst n, pl *-aat*/ a bluff, a deception.

بلفجى *balfagi* /n pl *-yya*/ bluffer, deceiver.

بلاف *ballaaf* /n */ sweet-talker, deceiver, bluffer.

اتبلف *ʕitbalaf* /vi/ to be bluffed, be taken in. -iva *mitbilif*.

ب ل ف [2]

بلف *balf* <Engl> /n pl *buluuf, bulúfa*/ valve.

ب ل ق ا ن

البلقان *ʕil-balqaan* /prop n/ the Balkans.

ب ل ك

بلوك، بلّك *buluk* (also *bulukk[1]*) <T *bölük*> /n pl *bulukaat, bulukkaat*/ *[police and mil, obsol]* company. *buluk ʕamiin* company quartermaster-sergeant. *bulukaat in-niẓaam [obsol]* riot police (subsequently styled *ʕil-ʕamn il-markazi*).

ب ل ك ا ر

بلاكار *balakaar* <Fr *placard*> /n pl *-aat*/ wall-cupboard.

ب ل ك ك [1]

بلّك *balakk, bilakk* <prob Engl *black*> /n/ tar, pitch, bitumen.

بلّكة *balakka* <It *placca*> /n pl *-aat*/ **1** *[elec]* insulating disc. **2** *[plumb]* washer. **3** *[naut]* escutcheon.

بلّك، بلوك *bulukk[2]* <Engl *block*> /n pl *-aat*/ **1** block of buildings. **2** (also *kuʃk[i] bulukk*) railway signal-box. *ɛaamil bulukk* signalman. **3** *bulukk[i] noot* writing pad.

ب ل ك ك [2] see ب ل ك : *bulukk[1]*

ب ل ك ل –

بولكلى *bulkili* /prop n/ residential quarter in Alexandria to the east of Stanley, and summer quarters of the government under the monarchy.

ب ل ك و ن

بلكون *balkoon, balakoon* <perh Fr *balcon*> /n/ balcony or back stalls (in a cinema or theatre).

بلكونة *balkoona, balakoona* <perh It *balcone*> /n pl *-aat*/ **1** balcony. **2** platform (e.g., of a high-wire performer).

ب ل ك ى

بلكى *balki* <T *belki* from P> /adv/ perhaps, maybe.

ب ل ل [1]

بلّ *ball (i)* /vt/ **1** to moisten, dampen, wet. *laazim tibill ir-ruqaaq bi-farbaat* you should moisten the *ruqaaq* with syrup. *saɛaat il-ɛayyil yibill[i] nafs-u* sometimes the child wets himself. *faɛr-i lissa mabluul* my hair's still wet. ‖*ball[i] riiq-(u)* (1) to wet one's whistle. (2) to give (s.o.) respite. -*ball if-farbaat* he diluted the syrup to make a sweet drink. **2** to soak. *tibill il-fuul li-ɤaayit ma ynabbit* you soak the broad beans until they sprout. ‖*bill-u wi-frab mayyit-u* (soak it and then drink the water) ≈ it's not worth the paper it's written on (of a worthless document or written paper; reference to the folk cure of drinking water in which a written charm has

been soaked). **3** to embarrass. *ʕinta ballet-ni quddaam xaṭibt-i* you embarrassed me in front of my fiancée. - vn *ball, balla, balal, balalaan*; ava *baalil*; pva *mabluul*.
بلّة *balla* **1** /inst n, pl *-aat*/ a moistening, a wetting. **2** /vn/ ‖ *zawwid iṭ-ṭiin balla* ≈ he made things go from bad to worse. **3** /n pl *bilal*/ bundle (of reeds, for making a mat).
بلل *balal* /n/ moisture.
بليلة *biliila* /n/ dish of stewed wheat eaten with milk and sugar. *biliila farkasiyya* a *biliila* made with unhusked green wheat.
مبلّة *maballa: zawwid il-maballa ṭiin* ≈ he made things go from bad to worse.
اتبلّ *ʔitball* /vi/ **1** to become moist or damp. **2** to be or become soaked. ‖ *ma-titball[i]-ʃ fi-buqq-u fuula* (a broad bean can't be soaked in his mouth) he can't keep his mouth shut. **3** to be or become embarrassed. - ava/iva *mitball*.
انبلّ *ʔinball* = *ʔitball*. - ava/iva *minball*.
بلّل *ballil* /vi/ to moisten slightly. *tiballil il-ʛumaaʃ wi-baʕdeen tikwii* you dampen the cloth and then iron it. - vn *tabliil*; ava/pva *miballil*.

ب ل ل [2]
بلّ *bull* <poss Engl mil slang *bull*> /n/ *[mil]* khaki webbing.

ب ل ل اص
بلّاص *ballaaṣ* /n/ **1** *kafr ʔil-ballaaṣ* /prop n/ a village near Qena in Upper Egypt, known in particular for its clay deposits. ‖ *min kafr il-ballaaṣ* oafish. — /pl *balaliiṣ*/ **2** (also *ballaaṣi*) large two-handled earthenware pitcher (see Pl.A, 10). **3** clumsy and stupid person, oaf.
بلّاصى *ballaaṣi* = *ballaaṣ* 2.

ب ل ل ان
بلّانة *ballaana* <Gr *balaneus*> /n pl *-aat*/ female bath-attendant and masseuse.

ب ل ل و
بلّو *ballu* <perh Engl> /n/ hullaballoo. *ʕaamil ballu* he's making a big fuss.

ب ل ل و ر [1]
بلّورة *balluura[1]* <Engl> /n/ *[anat]* pleura.

ب ل ل و ر [2] see ب ل و ر: *balluur, balluura[2], balluuri*

ب ل ل و ش see ب ل ش: *balluuʃi*

ب ل ل و ن
بلّون *balloon* <It *pallone*> /n pl *-aat, balaliin*/ balloon. - also *baloon*.
بلّونة *balloona* = *balloon*. - also *baloona*.

ب ل ل ي ن
بلّين *balliin* <Lat> /n pl *balaliin*/ *[Chr]* pallium.

ب ل م
بلم *balam* /adj invar/ dim-witted.
بلّم *ballim* /vi/ to be or become aghast, stupefied or sullen. - vn *tabliim*; ava *miballim*.
تبليمة *tabliima* /pl *-aat*/ instance noun of *tabliim*. *ʕamma kaan miballim ḫittit tabliima* he was absolutely staggered.
اتبلّم *ʔitballim* /vi/ to be stupefied, become stupid. *tuqʕud tiʕallim fil-mitballim yiṣbaḥ naasi [prov]* no matter how much you try to teach the dimwit he turns out not to have learned a thing. - ava *mitballim*.
استبلّم *ʔistiballim* /vi/ to be or become stupefied or mystified. - ava *mistiballim*.

ب ل م ث see ب ل م و س: *balmoosi*

ب ل م ر
بلمر *balmar* <Engl> /vt/ *[chem]* to polymerize. - vn *balmara*; ava/pva *mibalmar*.
اتبلمر *ʔitbalmar* /vi/ *[chem]* to be polymerized. - iva *mitbalmar*.

ب ل م س ل
بليمسول *bilimsul* <Engl>: *ʕalaama blimsul [naut]* Plimsoll line.

ب ل م ن
بلمان *bulman* <Engl *pullman*> /n/ overland express bus.

ب ل م و س
بلموسى *balmoosi* <Engl> /n pl *balamiis*/ *[Chr]* a member of the Plymouth Brethren.

ب ل م و ط
بلاموطى *balamooṭi: raaḥ balamooṭi* to be in vain, go for nothing.

ب ل ن [1] see ب ل ل ان: *ballaana*

ب ل ن [2] see ب ل ل و ن: *balloon, balloona*

ب ل ن [3] see ب ل ل ى ن : *balliin*

ب ل ن [4] see ب ل و ن [1] : *baloon[1], baloona*

ب ل ن [5] see ب ل و ن [2] : *baloon[2], baluun*

ب ل ن ت
بلنتى *bilinti, bilanti* <Engl> /n pl *-yaat, -haat/ [soccer]* penalty, penalty kick.

ب ل ن ج
بلنجة *balanga* /n pl *-aat/ [agric]* metal rod by which the depth of a ploughshare may be adjusted (see Pl.D, 19).

ب ل ن د
بولندا *bulanda* /prop n/ Poland.
بولندى *bulandi* **1** /adj */ Polish. **2** /n */ a Pole. **3** /n, no pl/ the Polish language.

ب ل ن س see ب ل ن ص : *balanṣ*

(ب ل ن ش)
بلانش *balanʃ[1]* or *balanʃ[1]* <Fr *planche*> /n pl *-aat/* table top.
بلانش *balanʃ[2]* or *balanʃ[2]* <Fr *blanche*> /n pl *-aat/ [mus]* minim, half note.
بلانشة *balanʃa* <perh Fr *planche*> /n pl *-aat/ [theat]* box in which coloured lights are fixed on the stage.

ب ل ن ش –
بلانشيطة *balanʃiiṭa* <Fr *planchette*> (surveyor's) plane-table.

(ب ل ن ص)
بلنص *balanṣ[1]* /n pl *-aat, balaaniṣ/* (powered) fishing boat.
بلنص *balanṣ[2]* <perh Fr *balance*> /n pl *-aat/* **1** somersault. *ḍarab balanṣ[i] fil-hawa* he turned over in mid-air. **2** balance-wheel (in a watch or clock).

ب ل ن ك و
بلانكو *balanku* <It *palanco*> /n/ *[naut]* tackle. *balanku kawirta* deck tackle. *balanku migwiz* double whip.

ب ل ن م –
بلانيمتر *balanimitr* <Fr> /n pl *-aat/ [geom]* planimeter.

ب ل ه
بله *balah* /n/ idiocy.
أبله *ʔablah* /adj, fem *balha*, pl *bulh, bulaha/* idiotic, imbecilic.

ب ل ه ر –
بلهارسيا *bilharsiya, bilharisya* (also *bilharsa, harsa*) <prop n *Bilharz*> /n/ *[path]* bilharziasis, schistosomiasis.

ب ل و see ب ل ى [1] : *balwa*

ب ل و ر
بلّور *balluur* /n/ cut glass, crystal. - also *bannuur.*
بلّورة *balluura[2]* /unit n, pl *-aat/* piece of crystal. *balluurit ṭarabeeza* plate-glass table top. - also *bannuura.*
بلّورى *balluuri* /adj/ crystalline.
بلور *balwar* /vt/ **1** to cause to crystallize. *sukkar mibalwar* granulated sugar. **2** to summarize, epitomize, bring into focus. - vn *balwara*; ava/pva *mibalwar.*
اتبلور *ʔitbalwar* /vi/ to crystallize. - ava *mitbalwar.*

ب ل و ز
بلوزة *biluuza, bilooza* <It *blusa*> /n pl *-aat/* **1** blouse. **2** (woman's) sweater.

ب ل و ظ
بالوظة *baluuẓa* <T *palûze* from P> /n/ **1** smooth pudding based on cornstarch, sugar and water. **2** *[abus]* fat slob.

ب ل و ف ر
بلوفر *buloofar, buloovar* <Engl> /n pl *-aat/* pullover, sweater.

ب ل و ك see ب ل ك and ب ل ك ك [1] : *bulukk[1], bulūkk[2]*

ب ل و ن [1]
بلون *baloon[1]* <poss It *pallone*> /n pl *-aat/* balloon. - also *balloon.*
بلونة *baloona* = *baloon.* - also *balloona.*

ب ل و ن [2]
بالون *baloon[2], baluun* <Fr *ballon*> /n/ brandy snifter.

ب ل ى [1]
بلى *bili (a)* /vi/ to wear out, become rotten. - vn *bila*; ava *baali.*
بلى *bala[2] (i)* /vt/ to afflict. *yibli w-yʕiin* God (both)

afflicts (us) and helps (us to withstand the ordeal). - /the literary passive occurs/ *ʕiza buliitum fa-statiru [prov]* when you have been afflicted (with being a sinner) don't advertise it. - vn *bala*; ava *baali*; pva *mabli*.

بلاء، بلا *bala*[3] /n/ **1** calamity, affliction. *wuquuʕ il-bala wala ntiẓaar-u [prov]* the occurrence of calamity is preferable to anticipation of it. **2** serious skin disease (e.g., mange).

بلوة *balwa* /n pl *balaawi*/ calamity, misfortune, disaster. *ʕeeh il-balaawi di* what's all this mess? *gat-ak balwa* ≈ may misfortune befall you! *min ʃaaf balwit ɣeer-u haanit ɛalee balwit-u [prov]* one's own misfortunes can be insignificant in comparison with those of others. *ʕil-balwa tɛumm[i] wir-raḥma txuṣṣ* affliction is for all, while mercy is for individuals. ‖ *raagil balwa* (1) a clever devil. (2) a thorough pest.

بليّة *baliyya* /n/ calamity, misfortune, disaster. - /adjectivally/ *raagil baliyya* a wretched man.

ابتلى *ʕitbala* /vi/ to be afflicted. - iva *mitbili*.

انبلى *ʕinbala* = *ʕitbala*.

ابتلّى *ʕitballa* /vi/ *[abus]* to make an accusation, knowing it to be false. *ʕitballa ɛalayya bi-ʕinn[a] ɛalayya gneeh* he falsely accused me of owing a pound. - ava *mitballi*.

ابتلى *ʕibtala* **1** /vt/ to afflict. *rabb-i-na yibtilii-k bi-muṣiiba* may God afflict you with a disaster! **2** to be afflicted. *il-balaawi lli btaleena biiha* the calamities we have suffered. - vn *ʕibtila*; ava/pva *mibtili*; pva *mubtali*↓.

ب ل ى [2]

بال *baal*[1] /n/ mind. *da kalaam ma-gaa-ʃ[i] ɛala baal-i* such a thing never crossed my mind. *raaḥ ɛan baal-i* it slipped my mind. *ʕaddii-k ṭariiḥa ma-kat ɛal-baal* I'll give you a beating such as you never dreamed of. *ʕin ʃa-lla tnuul illi ʃ-baal-ak* I hope you attain what you have in mind. ‖ *ṭawwil baal-u* he was patient. - *baal-u waasiɛ* (1) he is tolerant. (2) he has no idea of time, he is hopelessly unpunctual. - *ṣaaḥib baleen kaddaab (w-abu talaata mnaafiq) [prov]* ≈ one who tries to do two things at once is fooling himself (and he who tries to do three fools himself even more). - *xad* (or *xalla) baal-u* to be mindful, pay attention, take note, as in *ma-xadt[i]-ʃ baal-i mil-ḥikaaya di* I didn't think of that, *xud baal-ak lamma ʕakallim-ak* pay attention when I speak to you! *xud baal-ak wi-nta mɛaddi ʃ-ʃaariɛ* watch out while you're crossing the street! *ʕana waaxid baal-i* (1) I'm on my guard. (2) I'm paying attention. (3) I'm quite well aware, *xud baal-ak miʃ-ʃanṭa ɛala ma ʕagiib ɣilbit sagaayir* keep an eye on the bag while I get a packet of cigarettes! *xad* (or *ḥaṭṭ[i]) fi-baal-(u)* /usu w neg/ to become perturbed, become concerned, as in *ʕiftakart innaha ḥaaga basiiṭa ɑumt[i] ma-xadt[i]-ʃ fi-baal-i* I thought it a simple matter so I didn't get anxious. - *ɑaal fi-ɛaɑl[i] baal-u* he thought to himself. - *ʕilli baal-ak fi-* the you-know-what, as in *gibt illi baal-ak fii* did you bring the you-know-what? - *min illi baal-ak fii* ≈ of the you-know-what sort, as in *dool banaat mi-lli baal-ak fiihum* you know what sort of girls they are! - *baal-ak* you know (what?), as in *baal-ak - ʕana wɑiɣt[i] f-ḥubb-a-ha* you know what? I've fallen in love with her! *baal-ak baɑa law ruḥna w-laɑeena l-ɑaṭr[i] miʃi* you know what, if we go and find the train has left (we'll be in a fix).

¶ *ɛala baal ma* and *ɛa-baal ma* /conj/ (1) until. *ʕistannaa-ni ɛala baal m-aagi* wait for me until I come. (2) by the time that. *ɛala baal ma geet kaan rawwaḥ* by the time I came, he had gone home.

بالى *baala*[2]↑ /vi/ to care, pay heed. - vn *mubalaa*; ava *mubaali*.

ب ل ى [3]

بلية *bilya* <It *biglia*> /n pl *bilay, bilyaat*/ **1** marble, small ball. *bilya xaʃab* small wooden knob. **2** rolling-pin.

بلى *bily* /coll n/ marble(s). ‖ *rummaan bily* ball-bearings. - *naftaliin bily* moth-balls.

ب ل ى ت –

بلياتشو *bilyatʃu* <It *pagliaccio*> /n pl -*aat*/ jester, clown.

ب ل ى ج

بوليجة *buliiga* <It *puleggio*> /n pl -*aat*/ *[naut]* sheave (of a block).

ب ل ى ر –

بلياردو *bilyardu* <It> /n/ billiards.

ب ل ى ص [1]

بوليس *buliiṣ* (also *buliis*) <prob Fr> /n/ police. *ɛaskari buliiṣ* a policeman. *ʕil-buliiṣ id-dawli* Interpol. *buliiṣ ḥarbi* military police.

بوليسى *buliiṣi* (also *buliisi*) /adj/ pertaining to police. *riwaaya buliṣiyya* a detective story.

ب ل ى ص [2]

بوليصة *buliiṣa* <It *polizza*> /n pl *bawaaliṣ, bawaliiṣ,*

bulişaat/ bill. *buliişit taʃmiin* insurance policy document. *buliişit faḫn* bill of lading.

ب ل ى ه
باليه *baleeh* <prob Fr> /n/ ballet.

ب م
بم *bim: qaal bim* to utter a word (of protest), as in *ʃiwɛa tquul bim* not a peep out of you! *ma-qal-f[i] bim* he didn't make the slightest protest.

ب م ب [1]
بمبة *bumba[1]* <It *bomba*> /unit n, pl *-aat/* **1** percussion fire-cracker. **2**↓ bomb. ‖ *ʃiddaa-li bumba* he played a dirty trick on me.
بمب *bumb* /coll n/ **1** percussion fire-crackers. **2**↓ bombs. ‖ *zayy il-bumb* great, fantastic, as in *şiḥḥìt-i zayy il-bumb* my health is fantastic!

ب م ب [2]
بمبة *bumba[2]* <It *pompa*> /n pl *-aat/* pump.

ب م ب [3] (ب م ب)
بمبه *bamba[1]* <T *pembe*> /adj invar/ pink, rose-coloured. *bamba msaxsax* shocking pink. - also *banba, banbi*.
بمبة *bamba[2]: ʃiqaaɛ bamba [mus]* rhythmic mode in 4/4 time consisting of two strong beats of one count each, followed by a rest and a weak beat of half a count each and a rest of one count.
بمبه *bamba[3]* given name (usually female). ‖ *wilaad ɛali bamba* street acrobats.

ب م ب ا ش see ب ن ب ا ش : *bimbaaʃi*

ب م ب ا غ see ب ن ب ا غ : *bumbaaɣ*

ب م ب و
بامبو *bambuu, bambu* <perh Engl> /n/ bamboo cane. *karaasi bambu* cane chairs.

ب م ب و ط
بمبوطى *bambuuṭi* <Engl *bumboat*> /n pl *-yya/* port trader who effects sales from a small boat to passengers on board ship.

ب م ب و ن [1]
بمبون *bumboon* <prob Fr> /n/ **1** pompon, fringing with beads or tassles (used in the decoration of upholstery). **2** *[bot]* pompon.

ب م ب و ن [2] see ب ن ب و ن : *bumbooni, bumbunaaya, bumbuniira*

ب م ب ى ه
بومبيه *bumbeeh* <Fr *bombé*> /adj invar/ convex, rounded.

ب م و ل
بيمول *bimool* <Fr *bémol*> /n pl *-aat/ [mus]* flat. *nuşş[i] bimool* half flat - also *mull*.

ب م ى
بامية *bamya* /n/ okra. ‖ *di ʃumuur bamya* this is all corruption.

ب ن ء see ب ن ى [1] : *binaaʃ, binaaʃan, bannaaʃ*

ب ن ب
بنبه *banba* <T *penbe*> /adj invar/ pink, rose-coloured. *banba msaxsax* shocking pink. - also *bamba*.
بنبى *banbi = banba*.

ب ن ب ا ش
بنباشى *binbaaʃi, bimbaaʃi* <T *binbaşı*> /n pl *-yya/ [obsol]* army rank equivalent to lieutenant-colonel (replaced by *muqaddam*). - also *bikbaaʃi*.

ب ن ب ا غ
بنباغ *bumbaaɣ* <T *boyun bağı*> /n pl *banabiiɣ/* bow-tie.

ب ن ب و ن
بنبونى *bumbooni* or *bunbooni* <It *bomboni*> /coll n/ sweet(s), candies.
بنبونة *bumbuuna* or *bunbuuna* /unit n, pl *-aat/* a sweet, a candy.
بنبونايه *bumbunaaya* or *bunbunaaya = bumbuuna*.
بنبونيرة *bumbuniira* or *bunbuniira* <It *bomboniera*> /n pl *-aat/* covered candy-dish.

ب ن ت [1]
بنت *bint* (also, less formally, *bitt*) /n pl *banaat/* **1** girl. *madrasit banaat* a girls' school. *ʃikfi g-garra ɛala fumm-a-ha tiṭlaɛ il-bint[i] l-ʃumm-a-ha [prov]* ≈ just as a jar will only turn out what it was filled with, so a girl will always take after her mother. ‖ *ʃil-bitt[i] mraat-i* ≈ my little wife, the little old girl. **2** daughter. *bint[a] ɛamm* female paternal first cousin. ‖ *ya bint-i* form of address to a woman younger than the speaker. **3** virgin.

4 queen (in cards). – for other phrases beginning with *bint* (e.g., *bint[i] naas*), look up the second component of the phrase. see further under ب ت ت [2]

بناتي *banaati* /adj invar/ **1** pertaining to girls, girlish (of clothes, games, manners etc.). **2** seedless (of fruit). **3** young (of beef).

بنوت *binuut: bint[i] bnuut* a virgin.

بنوتة *bannuuta* /adj invar/ sissyish. *walad bannuuta* an effeminate boy.

ب ن ت [2] see ب ن ط : *bunt*

ب ن ت ا ج

بونتاج *buntaaj* <perh Fr *pointage*> /n/ *[print]* final retouching of zinc plate.

ب ن ت س –

بانتيسبانيا *bantisbanya* <It *pan di Spagna*> /n/ sponge cake.

ب ن ت ف ل

بنتوفلي *bantufli* <It *pantofoli*> /n/ **1** /coll/ slippers. **2** /pl *bantuflaat*/ pair of slippers.

ب ن ت ك –

بنتكستي *bintikusti* <Gk *pentêkostê*> /n/ *[Chr]* Pentecost.

ب ن ت و

بنتو *bintu* <It *venti*> /n pl *-haat*/ *[obsol]* twenty-franc piece, Napoleon.

ب ن ت و ت

بنتوت *bantuut* <prob Copt> /n pl *banatiit*/ peg on the beam of a plough, or of a *saqya*, for the attachment of harness (see Pl.D, 13). - also *ʃantuut, lantuut*.

ب ن ت ي ك

بنتيك *bantiik* /n pl *banatiik*/ strip of low-lying land alongside a dyke. - also *bankiik*.

ب ن ج [1]

بنج *bing* /n/ anaesthetic. *duktuur bing* anaesthetist. *bing[i] kulli* general anaesthetic. *bing[i] mawḍiʕi* local anaesthetic.

بنّج *bannig* /vt/ to anaesthetize. - vn *tabniig*; ava/pva *mibannig*.

اتبنّج *ʃitbannig* /vi/ to be anaesthetized. ‖ *kal wi-tbannig* he stuffed himself silly. - iva *mitbannig*.

ب ن ج [2]

بنج *bang* <P *panj*> /n pl *-aat*/ five (on dice etc.).

ب ن ج ب –

بنج بونج *bingibung* <Engl> /n/ ping-pong.

ب ن ج ر

بنجر *bangar[1]* <T *pancar*> /n/ beetroot. *bangar is-sukkar* sugar beet.

بنجر *bangar[2]* /vi/ to become bloated, become full. *kal wi-bangar* he ate until he reached near bursting. - vn *bangara*; ava *mibangar*.

ب ن ج ز

بنجز *bunguz* <Engl> /n/ bongo drums.

ب ن ج ق

بنجق *bangaq* /n pl *banaagiq*/ peg-box (of a musical instrument, see Pl.J, 8).

ب ن ج و ر

بونجور *bunjuur* <Fr *bonjour*> /interj/ good day!

ب ن د [1]

بند *band* <T *bend* from P> /n pl *binuud*/ article, item, clause, paragraph (of a law, contract etc.). *ʃil-band[i] ma-yismaḥ-ʃ* (1) the (budget) item does not permit it. (2) the money won't stretch that far. *ḥ-aḥuṭṭ-a-ha taḥt[i] band il-badalaat* I'll charge it to allowances. *ʃil-masaaʃil di tudxul fi-bnuud il-ḥurriyya ʃ-faxṣiyya* these matters fall into the categories of personal liberty.

بنّد *bannid* /vt/ to itemize, list, categorize. - vn *tabniid*; ava/pva *mibannid*.

اتبنّد *ʃitbannid* /vi/ to be itemized, be categorized. - iva *mitbannid*.

ب ن د [2] ( )

باندة *banda* <prob It *banda*> /n pl *-aat*/ decorative band on clothes.

بندة *binda* /n pl *binda*/ *[naut]* bollard.

ب ن د ا ج

بنداج *bindaaj* (also *bindaaʃ*) <Fr> /n pl *-aat*/ bandage.

ب ن د ا ش see ب ن د ا ج : *bindaaʃ*

ب ن د ر [1]

بندر *bandar* <P *bandar*> /n pl *banaadir*/ **1** (large) town. *sittaat il-bandar* the ladies of the town. **2** *[obsol]*

police headquarters of a town (as distinct from a *markaz*, the police headquarters of the surrounding villages). *ḥ-awaddii-k il-bandar* I'll take you to the police (said in a town).
بندري *bandari* /adj */ *[obsol]* coming from or pertaining to a *bandar*.

[2] ب ن د ر see ب ن د و ر: *banduur, banaduura, banduura*

[3] ب ن د ر see ب ن د ي ر: *bandiir, bundeera*

ب ن د ق
بندق *bunduq* /coll n/ hazelnut(s).
بندقة *bunduqa* **1** /unit n, pl *-aat*/ a hazelnut. **2** /n pl *banaadiq*/ *[rur]* rifle, large gun.
بندقي *bunduqi* /n/ **1** Venetian sequin. – /adj invar/ **2** 24-carat (of gold). **3** hazel, red-gold (in colour).
بندقيّة *bunduqiyya* /n pl *banaadiq*/ rifle, shotgun. *bunduqiyyit raff* shot-gun. *bunduqiyyit hawa* air-gun.
البندقيّة *ʔil-bunduqiyya* /prop n/ Venice.

ب ن د ن –
بندنتيف *bandantiif* <Fr *pendentif*> *-aat*/ necklace with a medallion or pendant. - also *banṭanṭiif*.

(ب ن د و ر)
بندور *banduur* /n pl *banadiir, banduraat*/ hair-spring of a watch.
بندورة *banaduura, banduura* <It *pomodoro*> /coll n/ *[rur]* tomato(es).

ب ن د و ل
بندول *banduul, bandool* <Fr *pendule*> /n pl *banadiil, bandulaat*/ pendulum.

(ب ن د ي ر)
بندير *bandiir* /n pl *banadiir*/ tambourine.
بنديرة *bundeera* <It *bandiera*> /n pl *banadiir*/ **1** flag, banner. **2** taxi-meter flag.

ب نّ ر
بنور *bannuur* /coll n/ (thick) glass, cut glass, crystal. ‖ *ya ṭabaq bannuur* ≈ you pretty thing! (flirtatious remark to a girl).
بنورة *bannuura* /unit n/ **1** /pl *-aat*/ any thick piece of glass. *bannuurit ṭarabeeza* a glass table top. **2** /pl *bananiir*/ **2a** glass water container of a water-pipe (see Pl.I, 5). **2b** *[slang]* 'drunkard's bottle', a round bottle (of spirits) containing approximately a quarter of a pint.
بنّر *bannar* /vt/ to polish (e.g., leather) by rubbing with a cylindrical block of glass. ‖ *wiff' mbannar* a face glowing with health. - vn *tabniir*; ava/pva *mibannar*.
اتبنّر *ʔitbannar* /vi/ to be given a sheen (by being rubbed with a cylindrical block of glass). - iva *mitbannar*.

ب ن ز
بنز *binz* /n pl *bunuuz, bunúza*/ (piston) ring.

ب ن ز م see ب ن ز ي ن: *banziim*

[1] ب ن ز ن
بنزن *binzin* (also *maf̣al binzin*) <prop n *Bunsen*> /n/ bunsen burner.

[2] ب ن ز ن see ب ن ز ي ن: *banziin, banziina*

ب ن ز ه –
بنزهير *banzaheer* <T *panzehir* from P> /coll n/ Egyptian lemon(s). *banzaheer ya lamuun* cry of the lemon vendor.

ب ن ز ي م see ب ن ز ي ن: *banziim*

ب ن ز ي ن
بنزين *banziin* (also *banziim*) <perh It *benzina*> /n/ **1** benzine, petrol, gasoline. *maḥaṭṭit banziin* petrol station. **2** *[auto]* accelerator pedal. *daas banziin* to accelerate, step on the gas.
بنزينة *banziina* /n pl *-aat*/ **1** petrol station, gas station. **2** small container for petrol.

(ب ن س)
بانس *bans* <poss Engl *pumps*> /n/ shoes (for men) without laces, slip-on shoes.
بنسة *binsa* <perh It *pinza*> /n pl *binas, binsaat*/ **1a** pair of pliers. **1b** *[elec]* hickies, conduit-bending pincers. **1c** *[print]* type-setter's tweezers. **2** hairpin, hairclip.

ب ن س ل –
بنسيلين *binsiliin* <Engl> /n/ penicillin, (loosely also) any antibiotic.

ب ن س و – see ب ر و س –: *biniswaar*

ب ن س ي ه
بنسيه *banseeh* <Fr *pensée*> /coll n/ pansy, pansies.

(ب ن س ي –)
بنسيون *bansayoon* <Fr *pension*> /n pl *-aat*/ boarding-house, small private hotel.

بونسيانا *bunsiyaana* /n/ *[bot]* poinciana.

ب ن ش
بنش *binʃ* <Engl> /n pl *-aat*/ bench.

ب ن ص ر
بنصر *binṣar, banṣar* /n pl *banaaṣir*/ fourth finger, ring finger.

ب ن ط
بنط، بونط *bunṭ* (also *bunt*) <It *punto*> /n pl *ʕabnaaṭ*/ **1** point (in scoring). ‖*faraqit bunṭ* to miss by a small margin, as in *ʕir-ruṣaaṣa kaanit ḥa-tiigi fiyya laakin il-ḥamdu li-llaaḥ faraqit bunṭ* the bullet would have hit me but thank God it missed by a fraction. **2** ace (in cards). **3** *[print]* point (a unit of typefount). ‖ *bunṭ[1] ʕiswid* bold type. **4** hand engraving.
بونطة، بنطة *bunṭa[1]* <It *punta*> /n pl *bunaṭ*/ *[metal]* **1** bit (of a drill). *bunṭa wi-mlaff* bit and brace. **2** pointed cold chisel. **3** toecap.
بونطة، بنطة *bunṭa[2]* <It *punto*> /n pl *bunaṭ*/ spot (of welding).
بنّط *bannaṭ* /vt/ **1** *[print]* to choose a type-fount for. **2** to retouch (an engraving plate). **3** *[metal]* **3a** to do spot welding to. **3b** to do projection welding to. - vn *tabniiṭ*; ava/pva *mibannaṭ*.
اتبنّط *ʕitbannaṭ* /vi/ passive of *bannaṭ*. - iva *mitbannaṭ*.

ب ن ط ل –
بنطلون *banṭaloon* (also *manṭaloon*↓) <perh Fr *pantalon*> /n pl *-aat, manaṭiil*↓/ **1** pair of trousers. *banṭaloon ʃurt* or *banṭaloon quṣayyar* a pair of shorts. **2** *[theat]* pair of side strips of a curtain.

ب ن ط ن –
بنطنيف *banṭanṭiif* <Fr *pendentif*> /n pl *-aat*/ necklace with a medallion or pendant. - also *bandantiif*.

(ب ن ط ى)
بنطى *bunṭi[1]* <It *ponte*> /n/ *[constr]* wooden plank two inches by twelve (used in particular for scaffolding).
بنطى *bunṭi[2]: bilaaṭus il-bunṭi* Pontius Pilate.

ب ن غ ل
بنغالى *binɣaali* /adj */ Bengali. ‖*tiin binɣaali* banyan.

ب ن ف س ج
بنفسج *banafsig, banafsag* <P *banafsha*> /coll n/ violet(s).

بنفسجى *banafsigi* /adj invar/ violet (in colour). *ʕaʃiʕʕa fooq il-banafsigiˆ* ultra-violet rays.

ب ن ف ش
بنفش *banafʃ* <P *bunafsh*> /n/ amethyst.

(ب ن ك)
بنك *bank[1]* <Fr *banc*> /n pl *bunuuk*/ **1** work bench. **2** shop counter.
بنك *bank[2]* <prob Engl> /n pl *bunuuk, bunúka*↓/ bank. *ʕil-bank il-markazi* the Central Bank (of Egypt).

ب ن ك ر
بنكر *bankar* <Engl>: *xad bankar [naut]* to bunker.

ب ن ك ن –
بنكنوت *bankinoot* <Engl *bank-note*> /n/ paper money. *ʕawraq bankinoot* banknotes.

ب ن ك ى ر
بنكير *bankiir* <T *banker* from It> /n pl *banakiir*/ wealthy man.

(ب ن ك ى ك)
بنكيك *bankiik* /n/ strip of low-lying land alongside a dyke. - also *bantiik*.
بنكيك *bankeek* <Engl> /n/ pancake (make-up).

ب ن ل ى see ف ن ل ى : *banilya*

ب ن ن [1]
بنّ *bunn* /coll n/ coffee bean(s). *bunn[i] ʕaxḍar* unroasted coffee beans. *bunn[i] mḥammaṣ* roasted coffee beans. *bunn[i] ḥaṣa* unground coffee beans. *bunn[i] maṭḥuun* fine-ground coffee beans (for Turkish coffee). *bunn[i] magruuf* (or *faransaawi*) coarse-ground coffee beans (for French-style coffee). *bunn[i] niskafeeh* instant coffee. ‖ *ga-k katmiit il-bunn* may you be struck dumb!
بنّى *bunni* /adj invar/ **1** brown, coffee-coloured. ‖*ḥ-axalli nahaar-ak bunni* I'll give you a bad time! **2** bay (of a horse).

ب ن ن [2]
بنّ *binn* <Engl *pen*> /n pl *bunuun, bunúna*/ steel nib-holder in a pen.

ب ن ن و ر see ب ن ر : *bannuur, bannuura*

ب ن ن و ه
بنوه *bannuuh, pannuuh* <Fr *panneau*> /n pl *-aat*/ panel with moulded decorations.

(ب ن ن ى)
بنّى *binni*[1] <perh Copt> /n/ lepidotus, a Nile fish (Barbus bynni).
بنّي *binni*[2] /n/ domesticated pigeon.
بنّيّة *binniyya* /n pl *banaani, binniyyaat*/ **1** pigeon coop made of mud. **2** underwater fish-hole in an embankment.

ب ن ه ا
بنها *banha* (also *banha l-ʕasal*) /prop n/ Benha, chief town of the Qalyubiya province and a main railway station.

ب ن و ا ر
بنوار *binwaar, bunwaar* <Fr *peignoir*> /n pl *banawiir, binwaraat*/ theatre box, seats at the front of a theatre balcony when partitioned into private sections.

ب ن ى [1]
بنى *bana (i)* /vt/ to build, construct. ***banu-lna madrasa f-ʃarq il-balad*** they built us a school in the eastern part of the town. *balad mabniyya ʕala tall*[a] *ʕaali* a town built on a high hill. *ʃil-baani ṭaaliʕ wil-faaḫit naazil [prov]* (the builder is going up and the digger is going down) the good flourish while the evil suffer. *ṭariiqit tafkiir-u kull-a-ha mabniyya ʕalà ʃ-ʃakk* his whole way of thinking is founded on doubt. - vn ***buna, binaaʔ***; ava *baani*; pva *mabni*.
بنا *buna* /n/ building.
بناء *binaaʔ*↑ /n/ building, structure.
¶ *binaaʔan ʕala*↑ /prep/ on the basis of, according to. *binaaʔan ʕala kida* on this basis.
بنية *bunya, binyaˀ*↑ /n/ **1** build, physique. ***saliim il-binya*** of sound constitution. **2** (*binyaˀ*↑ only) *[ling]* formal structure. *binyit il-kilma* the structure of the word.
بنيان *bunyaan* /n/ style or method or quality of building.
بناية *binaaya* /n pl *-aat*/ building, construction. *binayaat gidiida* new buildings.
بنّا *banna* /n pl *-yiin*/ **1** bricklayer. ‖***banna wi-mnaawil*** or *banna wi-faaʕil* (both bricklayer and passer of bricks) one who does two jobs at the same time. **2** mason. ‖*ʕuud il-banna [bot]* Lignum vitae, Guaiacum.
بنّاء *bannaaʔ*↑ /adj/ constructive. ***naqd*[i] *bannaaʔ*** constructive criticism.

مبنى *mabna* /n pl *mabaani*/ building.
اتبنى *ʔitbana* /vi/ to be built, be constructed. -iva *mitbini*.
انبنى *ʔinbana* = *ʔitbana*.

[2] ب ن ى see also [1] ء ب ن
بنى *bani* /pl n, always constr/ the children of, those associated with. *bani ʔisraʔiil* the Children of Israel. *bani ʃakuuf [deris]* carpenters. ‖*bani ʔaadam* /fem *bani ʔadma*, pl *bani ʔadmiin*/ a human being. - *bani sweef* Bani Suef, town and province in Upper Egypt.
بنّي *binayy* /n/ *[women]* small boy, little lad.
بنيّة *binayya, bunayya*↑ /n pl *-aat*/ girlie, little girl.
اتبنى *ʔitbanna* /vt/ **1** to adopt as son or daughter. **2** to give patronage to (s.th. or s.o.). *laazim il-ʔafkaar ig-gidiida tlaaqi ḫadd*[i] *yitbannaa-ha* new ideas should find someone to encourage them. - vn *tabanni*; ava *mitbanni*.
تبنّى *tabanni* /n/ adoption. *ʔibn*[i] *bit-tabanni* an adopted son.

[3] ب ن ى
بونيّة *buniyya* <It *pugno*> /n pl *-aat*/ **1** blow, punch. **2** (also *buniyyà ḫadiid*) brass knuckles, knuckle-duster.

ب ن ى ن
بنين *bineen* /n/ biscuit made of flour, clarified butter and salt, flavoured with sesame, fennel etc., and shaped into thin rectangles. - also *mineen*.

(ب ن ى ه)
بنيه *buneeh* <Fr *bonnet*> /n pl *-aat*/ **1** bathing cap, shower cap. **2** (also *buneeh ḫariimi*) woman's brimless hat. **3** baby's bonnet or cap.
بانيه *baneeh* <Fr *pané*> /adj invar/ *[cook]* covered with bread-crumbs.

ب ن ى و
بنيو *banyu* <It *bagnio*> /n pl *-haat*/ **1** (fixed) bath tub. **2** bath for electro-plating. *niddii-lu banyu blatiin* we plate it with platinum.

ب ن ى و ن
بنيون *binyoon* <Fr *pignon*> /n pl *-aat*/ *[mech]* pinion.

ب ه
باء *bih* /fem n, pl *-aat*/ second letter of the Arabic alphabet. - also *baaʔ, beeh*.

ب ه ب ه
بهبه *bahbah* /vi/ to speak incomprehensibly. - vn *bahbaha*; ava *mibahbah*.

[1] ب ه ت
بهت *bahat*[1] or *bihit (a)* /vi/ **1** to turn pale, fade. *wiff-u*

bahat mil-xoof his face turned pale with fear. *ʕil-jakitta bahatit fiʃ-ʃams* the jacket faded in the sun. **2** to run (of colours). - vn *bahataan*; ava *baahit*.

بهتان *bahataan* /n/ paleness, pallor.

بهّت *bahhat, bahhit* /vt/ **1** to cause to fade. **2** to cause (colours) to run. - vn *tabhiit*; ava/pva *mibahhat, mibahhit*.

ب ه ت ²

بهت *bahat² (a)* /vt/ to astonish, surprise. - pva *mabhuut*.

بهتان *buhtaan* /n/ falsehood.

انبهت *ʔinbahat* /vi/ to be astonished, be surprised. - iva *minbihit*.

ب ه ج

بهجة *bahga* /n/ delight.

بهيج *bahiig* /adj */ delightful.

مباهج *mabaahig* /pl n/ delights.

اتبهج *ʔitbahag↓* = *ʔibtahag*. - ava *mitbihig*.

انبهج *ʔinbahag↓* = *ʔibtahag*. - vn *ʔinbihaag*.

ابتهج *ʔibtahag* /vi/ to be delighted. - vn *ʔibtihaag*; ava *mibtihig, mubtahig↑*.

ب ه د ل

بهدل *bahdil* /vt/ to dishevel, play havoc with, throw into confusion. *ma-tiqdar-ʃ[i] txuff[i] wi-nta mbahdil kida* you can't go in looking such a mess. *bahdilt[i] wiff-u* **1** gave his face a battering. *ʔil-ʒiyaal bahdilu l-ʔooḍa* the kids messed up the room. *ʃatam-u bahdil-u* he heaped abuse upon him and left him floundering. *ʔil-ḥubb[i] bahdala [prov]* to love is to be thrown into confusion. *ʔil-ʒizz[i] bahdala [prov]* wealth is dissipation. - vn *bahdala*; ava *mibahdil*.

اتبهدل *ʔitbahdil* /vi/ to be or become dishevelled, be maltreated, deteriorate (through bad treatment). *ṣiḥḥit-u tbahdilit* his health was ruined. - ava/iva *mitbahdil*.

ب ه ر ¹

بهر *bahar (a, i)* /vt/ **1** to strike with awe, overwhelm. **2** to dazzle (the eyes). - vn *bahar*; ava *baahir*; pva *mabhuur*.

بهرة *bahra* instance noun of *bahar*. *ʔitbahart[i] bahra* I was completely overwhelmed.

أبهر *ʔabhar* /adj, fem *bahra*, pl *buhr*/ albino. - also *ʔaghar*.

انبهر *ʔinbahar* /vi/ to be overwhelmed, overcome with awe. *ʔinbahar bi-gamal-ha* he was bowled over by her beauty. - iva *minbihir*.

اتبهر *ʔitbahar* = *ʔinbahar*. - iva *mitbihir*.

ب ه ر ²

بهار *buhaar* /n pl *-aat*/ spice (most commonly used in the plural to denote mixed spice).

ب ه ر ج

بهرجان *bahragaan* /n/ *[obsol]* decorative head-fringes of a bride.

بهرج *bahrag* or *bahrag* /vt/ to doll up (usually with an implication of poor taste). - vn *bahraga, bahraga*; ava/pva *mibahrag, mibahrag*.

اتبهرج *ʔitbahrag* or *ʔitbahrag* /vi/ to overdress, be overdressed, be tarted up. - ava/iva *mitbahrag, mitbahrag*.

ب ه ر ی ز

بهريز *bahriiz* <perh T *pehriz* from P> /n/ *[cook]* concentrated stock.

ب ه ظ

باهظ *baahiẓ* /adj */ excessive, exorbitant.

ب ه ق ¹

بهاق *buhaaq* /n/ *[path]* vitiligo alba.

مبوهق *miboohaq* /adj */ afflicted with vitiligo alba.

ب ه ق ²

باهوق *bahuuq* /n pl *bawahiiq*/ wooden frame onto which loads are fastened on a camel's back.

ب ه ل

بهل *bahal (i)* /vt/ to overwhelm. *gamal-ha bahal-u* her beauty stunned him. - vn *bahalaan*; ava *baahil*; pva *mabhuul*.

اتبهل *ʔitbahal* /vi/ to be overwhelmed, be awed. - iva *mitbihil*.

بهلى *bahli: ʒala l-bahli* **1a** unveiled (of a woman). **1b** in an immodest fashion. **2** openly, publicly.

ابتهل *ʔibtahal* /vi/ to supplicate, implore. - vn *ʔibtihaal*; ava *mibtihil*.

ابتهالات *ʔibtihalaat* /pl n/ *[Isl]* religious songs delivered, sometimes with the support of a chorus, during special celebrations, traditionally beginning with *ʕaʃis-na ʕadrik-na* ... (save us, come to our rescue (O God)).

ب ه ل ل

بهللة *bahlala* /n/ astonishment.

بهلول *bahluul* /pl *bahaliil*/ **1** /n/ jester, clown, buffoon. **2** /adj/ foolish (often with religious tendencies), dervish-like.

اتبهلل *ʔitbahlil, ʔitbahlal* /vi/ to become astonished.

ʔitbahlilna ɛala ɛamayil-ha lli miʃ maqbuula di we were amazed at that unacceptable behaviour of hers. - ava *mitbahlil*.

ب ه ل و –
بهلوان *bahlawaan* <P *pahlawân*> /n pl *-aat*/ **1** acrobat. **2** tricky person.

ب ه م ¹
بهيم *bihiim* /pl *bahaayim*/ **1** /n/ domestic animal (larger than a sheep), usually male. **2** /adj/ **2a** stupid. **2b** uncouth. — *bahaayim* /pl n/ **3** domestic livestock (larger than sheep). *bahaayim il-ħaliib* dairy animals.
بهيمة *bihiima* /pl *bahaayim*/ **1** /n/ domestic animal (larger than sheep). **2** /masc and fem adj/ **2a** stupid. **2b** uncouth.
انبهم *ʔinbaham* /vi/ to become obscure, become unintelligible. - vn *ʔinbihaam*; ava *minbihim*.
أبهم *ʔabham* /vt/ to make obscure, make mysterious. *ʔabham il-ħikaaya ɛafaan illi qaɛdiin* he made the matter unintelligible because of those present. - vn *ʔibhaam*; pva *mubham*.

ب ه م ²
إبهام *ʔibhaamˀ* /n pl *-aat*/ thumb.

ب ه و see ب ى ه : *bahawaat, bahawaati, bahawiyya*

ب ه و ق
بهوق *bahwaq* **1** /vt/ to make (too) large or wide. **2** /vi/ to become unwieldy, become too big to manage. *ʔil-ɛamaliyya bahwaqit* the whole thing got out of hand. *fustaan mibahwaq* a loose ill-fitting dress. - vn *bahwaqa*; ava *mibahwaq*.
اتبهوق *ʔitbahwaq* /vi/ to become (too) wide or large. - ava *mitbahwaq*.

ب ه و ه
باهوه *bahuuh* <Fr *bahut*> /n pl *-aat*/ buffet, sideboard.

ب ه ى ¹
بهى *bahi* /adj/ radiant, pleasant, full of happiness.
بهاء *baha, bahaaʔ* /n/ magnificence.
بهّى *bahiyy = bahi. bahiyy in-nuur* Shining with light (epithet of the Prophet Muhammad).
أبهى *ʔabha* /el/ more/most magnificent.
باهى *baaha* /vi/ to boast. *bi-ybaahi b-ʔeeh* what does he boast about! - vn *mubahaahˀ*; ava *mibaahi*.
اتباهى *ʔitbaaha* /vi/ to make a show, be boastful, be proud. *ʔil-qarɛa b-titbaaha b-faɛrˈ bint uxt-a-ha [prov]* the bald woman boasts of her niece's hair. - vn *tabaahi*; ava *mitbaahi*.

ب ه ى ²
بوهية *buhya* <T *boya*> /n/ decorator's oil-based paint. - also *buuya*.
بوهيجى *buhyagi* /n pl *-yya*/ **1** shoe-shine boy/man, shoe-black. **2** *[obsol]* housepainter, decorater. - also *buyagi*.

ب و ا ل
بوال *buwaal* <Fr> /n/ voile. - also *vuwaal*.

ب و ب ¹
باب *baab* /n pl *ʔabwaab, bibaan*/ **1** door, gate. *baab in-naggaar mixallaɛ [prov]* (the carpenter's door hangs awry) ≈ the cobbler's children are ill-shod. *ʔil-baab il-maqfuul yibɛid il-qaḍa l-mistaɛgil [prov]* (a closed door keeps unexpected calamities distant) circumspection wards off danger. *ʔil-baab illi ygii-lak minnu r-riiħ sidd-u wi-stiriiħ [prov]* (close the door that lets the wind in and relax) ≈ stay away from likely sources of trouble. ‖*fatħˈ baab* just a beginning. - *ʔana ɛaayiz beet min baab-u* I want a self-contained house. - *baab il-badan* anus. - *mil-baab liṭ-ṭaaq* see *ṭaaq*. - *ɛala baab allaah* poor, living on God's mercy. - *ya baab in-nabi* invocation of el-Sayyid el-Badawi. **2** chapter, subdivision. ¶ *min baab* /prep/ by way of, out of. *min baab il-mugamla* by way of courtesy. *min baab iz-zooq* out of politeness.
بوابة *biwaaba* /n/ **1** occupation of a *bawwaab*. **2** monthly payment to a *bawwaab*.
بوّاب *bawwaab* /n */ concierge, doorkeeper. ‖*baab min ɣeer bawwaab* a chaotic state of affairs, a free-for-all.
بوّابة *bawwaaba* /n pl *-aat*/ gate, main entrance. *bawwaabit hawiis* gate of a lock. *kaatib bawwaaba* clerk who records goods arriving and leaving (e.g., in a warehouse). *bawwaabit il-mitwalli* one of the old gates of Cairo located in the now populous area of *ʔid-darb il-ʔaħmar* (q.v.).
بوّب *bawwib* /vt/ to classify, order. *fuxlit-u ybawwib il-maɛlumaat* his job is to classify the information. - vn *tabwiib*; ava/pva *mibawwib*.
اتبوّب *ʔitbawwib* /vi/ to be classified. - iva *mitbawwib*.

ب و ب ²
بوبة *buuba* <It *poppa*> /n/ *[naut]* poop.

ب و ت
بوت *buut* (also *gazma buut*) <Engl> /n/ pair of boots.

ب و ت ق see ب ت ق

(ب و ج ى)

بوجى *buugi*[1] <Engl *bogie*> /n pl *bawaagi*/ railway truck or carriage.

بوجى *buugi*[2] <It *poggia*> /n/ *[naut]* (a vessel's) bearing away to leeward.

ب و ح

باح *baaḥ*[1] *(u)* /vi/ to make a disclosure or revelation. *baaḥ bis-sirr* he gave the secret away. - vn *booḥ, bawaḥaan*; ava *baayiḥ*.

باح *baaḥ*[2] *(i)* /vt/ to make permissible, allow. *ʕil-ḥagaat illi bi-tbiḥ-ha l-nafs-ak* the things you allow yourself.

باحة *baaḥa* /n pl *-aat*/ courtyard.

أباح *ʔabaaḥ↑* = *baaḥ*[2] — /the literary passive imperfect form occurs/ *ʕil-misaafir yubaḥ-lu ʕinnu yifṭar* the traveller is allowed to break the fast. - vn *ʕibaaḥa*; ava *mubiiḥ*; pva *mubaaḥ*.

إباحة *ʕibaaḥa* /n/ *[Isl law]* permissibility.

إباحى *ʕibaaḥi* /adj */ promiscuous, pornographic.

مباح *mubaaḥ* /n pl *-aat*/ *[Isl law]* permissible action.

استباح *ʕistabaaḥ* /vt/ to regard as permissible, consider fair game. - vn *ʕistibaaḥa*; ava *mistibiiḥ, mustabiiḥ↑*; pva *mustabaaḥ↑*.

ب و خ[1]

باخ *baax (u, i)* /vi/ to become tedious, become unappealing. *ʕin-nukta bi-tbuux lamma titqaal kitiir* a joke loses its punch when it's repeated often. - vn *bawaxaan*; ava *baayix*.

بايخ *baayix* /adj */ tedious, silly, annoying.

أبوخ *ʔabwax* /el/ more/most tedious, silly or annoying.

أبيخ *ʔabyax* = *ʔabwax*.

بواخة *bawaaxa* /n/ tediousness, silliness, boorishness.

بياخة *bayaaxa* = *bawaaxa*.

بوّخ *bawwax*[1] **1** /vt/ to make tedious or boring. **2** /vi/ to be or become tedious or boring. *ma-tbawwax-f*[i] *baʕa* stop being such a bore! - vn *tabwiix*; ava/pva *mibawwax*.

بيّخ *bayyax* = *bawwax*[1].

استبوخ *ʕistabwax* /vt/ **1** to consider tedious or silly. **2** to select for tediousness. *ʕistabwaxt*[i] *ktaab wi-ddet-huu-lu* I selected a boring book and gave it to him. — /vi/ **3** to behave in a silly or boorish manner. - vn *ʕistibwaax*; ava/pva *mistabwax*.

استبيخ *ʕistabyax* = *ʕistabwax*. - vn *ʕistibyaax*; ava/pva *mistabyax*.

ب و خ[2]

بوخة *buuxa, booxa* /n pl *-aat*/ vapour. *bi-tirfaʕ ʏaṭa l-ḥalla tfimm*[i] *buuxit it-ṭabiix* she lifts up the saucepan lid to smell the food cooking.

بواخ *buwaax* /n/ steam, vapour.

بوّخ *bawwax*[2] /vi/ to emit steam, give off vapour. ‖ *ʕil-ʕakla di bawwaxit fi-dmaaʏ-i* ≈ the meal made me drowsy with a feeling of well-being. - ava *mibawwax*.

ب و د ق see ب د ق

ب و د ى

بودى *boodi* <Engl> /n/ bodywork (of a car).

ب و ذ see ب و ز[2]

ب و ر[1]

بار *baar*[3] *(u)* /vi/ to be or become undesirable or unmarketable. *ʕil-biḍaaʕa baarit* the goods became unsaleable. ‖ *ʕil-bint*[i] *baarit* the girl became unmarriageable. - *ʕil-bayra l-beet ʕabuu-ha [prov]* (an unmarriageable woman belongs in her father's home) a faulty article should stay with its maker. - vn *bawaraan*; ava *baayir*.

بور *buur*[1] /adj invar/ **1** undesirable, unmarketable. *banaat buur* unmarriageable girls. **2** infertile. *ʕarḍ*[i] *buur* waste-land, uncultivable land.

بورانى *buraani* /adj invar/ made of dried ingredients (as opposed to fresh ones). *bamya braani* dish of okra prepared from dried okra.

بوّر *bawwar* /vt/ **1** to cause to become unusable or unmarketable. **2** to make (land) infertile. - vn *tabwiir*; ava *mibawwar*.

اتبوّر *ʕitbawwar* /vi/ to become unusable or unmarketable. - ava *mitbawwar*.

ب و ر[2] ( )

بور *buur*[2] <Fr> /n/ Port (in place names). *buur saʕiid* Port Said.

بورة *buura* <It *bora*> /n/ squall.

ب و ر ص see ب ر ص[2]: *mibooraṣ*

ب و ر ق see ب ى ر ق: *bawaariʕ*

ب و ر ى[1]

بورى *buuri*[1] <Copt> /coll n/ grey mullet (Mugil cephalus).

بوريّة *buriyya* /unit n, pl *-aat*/ a grey mullet.

بوريّاية *buriyyaaya* = *buriyya*.

ب و ر ى[2]

بورى *buuri*[2] <T *boru*> /n pl *bawaari*/ **1** bugle, pipe.

2 fine blow-pipe for directing heat in delicate soldering jobs. 3 type of water-pipe resembling a *gooza* but free-standing and having a flexible smoking-tube (see Pl.I, 11).

بروجي *buruugi* <T *borucu*> /n pl *-yya*/ bugler.

ب و ز [1]

بوز *buuz* <P *poz*> /n pl *buwaaz*/ **1a** muzzle, snout (of an animal). **1b** *[derog]* mouth (of a human). *ʕiqfil buuz-ak* shut your trap! ‖*bi-yiḍrab buuz* and *huwwa maadid buuz-u ʃibreen* he is pouting or sulking. *-leel wi-nhaar fi-buuz baʕḍ* ≈ they're cooped up together all the time. *-ḥaṭṭ[i] buuz-u f-ʕibb-u* he hung his head in silent grief. *-buuz il-ʕixṣ* wet-blanket, sobersides. *-lawya buz-ha* she is scowling. *-ʁaṣbin ʕan buuz-(i) [joc]* despite (my)self. **2** /pl *ʕabwaaz, buwaaz*/ tapering tip or protuberance. *buuz gazma* toecap. *buuz ʕibra* point of a needle. *buuz ik-karafatta* the point of the tie. *zaradiyya b-buuz malfuuf* round-nosed pliers.

بوّز *bawwiz* /vi/ to pout, sulk. *miraat-i bi-tbawwiz leel wi-nhaar* my wife sulks all the time. -vn *tabwiiz*; ava *mibawwiz*.

تبويزة *tabwiiza* /inst n, pl *-aat*/ a sullen look.

ب و ز [2]

بوذا *buuza* /prop n/ Buddha.

بوذي *buuzi* **1** /n */ a Buddhist. **2** /adj */ Buddhist.

البوذيّة *ʕil-buziyya* /n/ Buddhism.

ب و ز) [3]

بوز *booz* (also *booẓ*) <prob Fr> /n pl *-aat*/ *[phot]* pose.

بوزة *booza* <It *posa*> = *booz*.

ب و س

بوس *boos* <P *bos*> /vn/ ‖*boos il-ʕayaadi diḥk[a] ʕad-duquun [prov]* the kissing of hands (i.e. the showing of excessive respect) is a mockery. *-bi-boos il-ʕideen* with great difficulty, with great effort, as in *ma-ʕaṭaʕt[i]-ʃ it-tazkara ʕilla b-boos il-ʕideen* only with the greatest effort did I manage to buy the ticket.

باس *baas (u)* /vt/ to kiss. ‖*haat raas-ak* (or *ʕiid-ak*) *ʕabus-ha* ≈ let's make up. *-bust[i] ʕiid-i wiff[i] w-ḍahr* (I kissed my palm and the back of my hand) ≈ I gave thanks to God, I felt a sense of gratitude. *-ḫ-abuus ʕiid-ak* or *ḫ-abuus rigl-ak* ≈ I should be extremely grateful to you. -vn *boos*; ava *baayis*.

بوسة *boosa* /inst n, pl *-aat*/ a kiss. *boosit il-ḥayaah* the kiss of life, mouth-to-mouth resuscitation. ‖*wi-fooʕ(-u) boosa* with expressions of gratitude too, as in *tiraggaʕ ik-kitaab wi-fooʕ-u boosa kamaan* you have not only to return the book but also to show how grateful you are too.

اتباس *ʕitbaas* /vi/ **1** to be kissed. **2** /imperf only/ to be worthy of being kissed. *ʕiid titbaas* a hand to be kissed. -iva *mitbaas*.

انباس *ʕinbaas* = *ʕitbaas*. -iva *minbaas*.

بوّس *bawwis* /vt/ to allow or cause to kiss. *ma-ybawwis-ʃ[i] ḥadd[i] ʕiid-u* he does not let anyone kiss his hand. -vn *tabwiis*; ava *mibawwis*.

ب و س ى ر see ب س ر [2] : *bawasiir*

ب و ش [1]

بوش *booʃ[1]* /n/ <T *boş*, cf also Copt> /n/ play or looseness (of parts which could be more tightly adjusted). *ʕii booʃ fil-faraamil* the brakes are not tight. ‖*ṭiliʕ booʃ* to turn out to be nothing, turn out to be a flop, as in *kull illi ʕamal-u ṭiliʕ booʃ* everything that he did turned out to be a flop.

بوّش *bawwiʃ[1]* /vi/ **1** to cause a slackening or looseness. *bawwiʃna ʕal-ḥabl* we slackened the rope. **2** to become slack. -vn *tabwiiʃ*; ava *mibawwiʃ*.

اتبوّش *ʕitbawwiʃ[1]* /vi/ passive of *bawwiʃ[1]*. -iva *mitbawwiʃ*.

ب و ش [2]

بوش *booʃ[2]* <Copt> /n pl *ʕabwaaʃ*/ size, industrial starch.

باش *baaʃ (u)* /vi/ to become soggy, dissolve. -vn *bawaʃaan*; ava *baayiʃ*.

بوّش *bawwiʃ[2]* /vt/ **1** to soak (s.th., e.g., bread, aspirins) so that it disintegrates. **2** to coat with size. -vn *tabwiiʃ*; ava/pva *mibawwiʃ*.

اتبوّش *ʕitbawwiʃ[2]* /vi/ passive of *bawwiʃ[2]*. -iva *mitbawwiʃ*.

ب و ش [3]

بوش *buuʃ* <Engl> /n pl *ʕabwaaʃ*/ *[mech]* bush.

ب و ص [1]

بوص *buuṣ* /coll/ reed(s) (particularly of the rigid, hollow type of Saccharum spontaneum).

بوصة *buuṣa[1]* /unit n, pl *-aat*/ a reed, a piece of reed. *buuṣit gooza* mouth-reed of a water-pipe (see Pl.I, 8). *labbis il-buuṣa ṭibqa ʕaruusa [prov]* (dress up a reed and it will become (as pretty as) a doll) ≈ clothes make the man.

² (ب و ص)
بوصة *buuṣa*² <Fr *pouce*> /n pl *-aat*/ inch.
بوصة *buuṣa*³ <Fr *poussée*> /n pl *biwaṣ*/ *[naut]* pushing of a ship in a particular direction (e.g., by a tug). *buuṣa l-wara* heave astern! ‖*ɛamal buuṣa buxaar* to raise steam.

ب و ص ل see ² ب ص ل

ب و ط ط
بوطّ *buwaṭṭ* <Fr *boîte*> /n pl *-aat*/ *[elec]* connection box.

¹ ب و ظ
باظ *baaẓ (u)* /vi/ **1** to become spoiled or useless. *ʕil-ʕakl*ⁱ *baaẓ* the food became spoiled. *ʕaɛṣaab-i baaẓit* my nerves went to pieces. *ʕil-ɛuzuuma baaẓit ɛalayya* the party was spoiled for me. *saɛt-i bayẓa* my watch is out of order. **2** to be or become corrupted. *bitt*ⁱ *bayẓa* an immoral girl. -vn *bawaẓaan, booẓa*; ava *baayiẓ*.
أبوظ *ʕabwaẓ* /el/ more/most useless.
بوّظ *bawwaẓ* /vt/ to spoil, corrupt. *zawwidt il-malḫ*ⁱ *w-bawwaẓt il-ʕakl* I put in too much salt and spoiled the food. *miin bawwaẓ il-bint*ⁱ *di* (1) who corrupted this girl? (2) who (illegitimately) deflowered this girl? -vn *tabwiiẓ*; ava/pva *mibawwaẓ*.
اتبوّظ *ʕitbawwaẓ* /vi/ to be spoiled, be corrupted. -iva *mitbawwaẓ*.

² ب و ظ
بوظة *buuẓa* <T *boza*> /n/ **1** *[obsol]* barley beer. ‖*dimaaɤ-i baqit buuẓa* my mind has gone to pieces. -*di ʃirka buuẓa* this is a corrupt company. **2** /pl *buwaẓ, buẓaat*/ establishment for the sale of barley beer.

³ ب و ظ see ³ ب و ز : *booẓ*

¹ ب و ع
باع *baaɛ*¹ /n pl *-aat, ʕabwaaɛ*/ distance from tip to tip of the outstretched arms. ‖*baaɛ(-u) ṭiwiil* (he is) adept, (he is) adroit, as in *ʕin-naas dool baɛ-hum ṭiwiil fis-sirqa* those types are dab hands at thievery. -*bil-baaɛ wid-diraaɛ* by force.
بوع *buuɛ: ma-yiɛraf-ʃ*ⁱ *kuuɛ-u min buuɛ-u* (he doesn't know his elbow from the bones of his wrist) he cannot discriminate.

² ب و ع
اتبوّع *ʕitbawwaɛ* /vi/ to vomit. -ava *mitbawwaɛ*.
مباوعة *mibawɛa* /n/ vomiting.
استباوع *ʕistibaawaɛ*↓ /vi/ to vomit violently. -ava *mistibaawaɛ*.

ب و ق
بوق *buuq* /n pl *ʕabwaaq*/ **1** horn, bugle. ‖*ɛiid il-ʕabwaaq* Rosh Hashana, Jewish New Year. **2** horn-shaped loudspeaker. **3** *[mus]* bell of a wind instrument (see Pl.J. 20). **4** mouth-piece. **5** conch shell.
بوّق *bawwaq* /vi/ to shout challengingly, talk in a strident voice. -ava *mibawwaq*.

ب و ك ر
بوكر *bookar* <Engl> /n/ poker (the card game).

¹ ب و ل
بال *baal*²↑ *(u)* /vi/ to urinate. -vn *bawalaan*; ava *baayil*.
بول *bool* /n/ urine.
بولى *bawli* /adj/ urinary. *masaalik bawliyya* urinary tracts.
مبولة *mabwala* /n pl *mabaawil*/ (public) urinal.
بولينا *bawliina* /n/ *[chem]* urea.
بوّل *bawwil* /vi/ to urinate. -vn *tabwiil*.
اتبوّل *ʕitbawwil* /vi/ to urinate. -vn *tabawwul*↑; ava *mitbawwil*.

² ب و ل
بولة *boola* /n/ round (in shooting).

ب و ل س
بولس *buulus* /prop n/ male given name. ‖*buxuur il-buulus [Chr]* incense offered during a reading from the Pauline epistles.

¹ ب و م
بوم *buum* /coll n/ owl(s). *ʕitbaɛ il-buum yiwaddii-k il-xaraab [prov]* ≈ he who takes a raven for his guide will light on carrion.
بومة *buuma*¹ /unit n, pl *-aat*/ an owl. ‖*wiʃʃ il-buuma* (1) ugly face. (2) bringer of misfortune.

² ب و م
بومة *buuma*² <It *boma*> /n/ *[naut]* boom.

(ب و ن)
بون *boon*¹ <Fr *bon*> /n pl *-aat*/ voucher, chit. **2** order form.
بون *boon*² <perh Copt> /adj invar/ deep, complicated, devious (of a person).

ب و ن ص
بونص *boonaṣ* <Engl> /n pl *bawaaniṣ*/ bonus.

ب و ه see ب ا ه : *baah*

ب و ه ق see ب ه ق[1] : *miboohaq*

ب و و
بوّ *baww* /n/ **1** /pl *-aat*/ stuffed effigy of a calf used to encourage a cow to let down her milk. **2** /no pl/ *[rur]* **2a** large ball of rags bound with cord. **2b** (also *ʃil-baww*) kind of hockey played with this ball (also called *ridd* q.v.).

ب و ى
بوية *buuya* <T *boya*> /n pl *-aat*/ decorator's oil-based paint. ‖ *buuyit naar* pottery glaze which requires firing. - *dahan il-hawa buuyà* (he painted the air) he did the impossible. - also *buhyà*.
بويجى *buyagi* /n pl *-yya*/ **1** shoe-shine boy/man, shoe-black. **2** *[obsol]* housepainter, decorater. - also *buhyagi*.

ب ى ء
بيئة *biiʃa* /n pl *-aat*/ **1** physical environment. *talawwus il-biiʃa↑* pollution of the environment. **2** social environment. *min biiʃa waṭya* from a low-class environment. ‖ *xidmit il-biiʃa* the Youth Community Service.
بيئى *biiʃi* /adj/ environmental.

ب ى ا ت
بياتى *bayaati* /n/ *[mus]* mode in Arabic music beginning on D and having E half flat and B flat.

ب ى ا د
بيادة *biyaada* <P *piyâda*> /n/ **1** /coll/ *[obsol]* infantry. **2** military drill, square-bashing. — /adv/ **3** on foot. *rawwaḥ biyaada* he walked home.

ب ى ا ن و
بيانو *biyaanu* <prob It> /n pl *-haat, -waat*/ piano.

ب ى ب
بايب *bayib* (also *baayib*) <Engl> /n pl *-aat*/ smoker's pipe.
بيبة *biiba* <It *pipa*> /n pl *-aat*/ **1** smoker's pipe. *duxxaan biiba* pipe tobacco. **2** *[plumb]* gully trap.

ب ى ب ى
بيبى *beebi* <Engl> /n pl *-haat*/ baby.

ب ى ت[1]
بات *baat (a)* /vi/ **1** to spend the night, stay overnight. *baatit ɛala l-ʃarḍ* she spent the night sleeping on the floor. *ʃilli nbaat fii niṣbaḥ fii [prov]* ≈ (1) what we spend the night discussing, we find ourselves discussing in the morning. (2) we have to repeat the same things over and over again. ‖ *ʃakl[i] baayit* (1) food from the day before. (2) stale food. - *tibaat naar tiṣbaḥ ramaad* ≈ every crisis passes with time. - *ʃirib ɛak-kitaab mayya bayta* ≈ he refuses to give the book back to its owner. **2** to fit (into s.th.). *laazim il-muftaaḥ yibaat fil-qifl[a] ɛala raḥt-u* the key should fit smoothly into the lock. **3** to repeat the year (in school or college). *baat fi-ʃuula talat siniin* he stayed three years in the first class. **4** to calm down (of the sea). - vn *bayaat, biyaat, bayataan*; ava *baayit*.
¶ *baat ɛala* to land on (s.o.), be at the expense of (s.o., of a trick, joke etc.). *ʃahi baatit ɛaleek* you were tricked.
بيات *biyaat* /vn/ ‖ *ʃil-biyaat iʃ-ʃitwi* hibernation.
بياتة *bayaata, biyaata* /inst n/ spending of the night.
بيت *beet* /n pl *biyuut, buyuut*/ **1** house, home. *qaɛadt[i] fil-beet ʃimbaariḥ* I stayed at home yesterday. ‖ *beet-i beet-ak* ≈ consider my home as your own. - *guwwa guwwa - beet-ak beet-ak* cry made to drive poultry indoors. - *beet allaah* (1) the Kaaba at Mecca. (2) a place of worship. - *ʃil-beet il-ḥaraam* the sacred precinct in Mecca. - *beet laḥm* Bethlehem. - *beet il-ɛankabuut* spider's web. - *buyuut il-ʃazyaaʃ* fashion houses. - *beet il-ʃadab* or *beet ir-raaḥa↓* lavatory. - *ʃil-filuus fi-bet-ha* the money is safe and sound. - *ʃidxulu l-buyuut min ʃabwab-ha* ≈ do things the proper way. - *xarg[i] beet* second-hand household effects. **2a** household. *maṣr[i] beet waaḥid* Egypt is one household. *ʃizzayy il-beet* how's the family? *yixrib beet-ak* ≈ God damn you! ‖ *ʃahl il-beet* the family of the Prophet Muhammad. **2b** wife. *ʃasraar been raagil wi-beet-u* secrets between a man and his wife. ‖ *ɛalayya ṭ-ṭalaaq min beet-i* strong oath or asseveration. **3** container, encasement. *beet buṣla* binnacle. *beet il-wild* the uterus. *beet il-looḥ* shoulder (of meat). *xazuuq fi-beet-u [arch]* (bridge) pile cast *in situ*. **4a** division on a game-board. **4b** irrigation basin (in a field, see Pl.E, 19). — /pl *ʃabyaat*/ **5** verse (of poetry).
بيتى *beeti* /adj invar/ **1** domesticated (of animals). *ḥamaam beeti* domesticated pigeons. **2** home-made. *marabba beeti* home-made jam.
بيوتات *biyutaat* /pl n/ *[obsol]* aristocratic families. *min ʃabnaaʃ il-biyutaat* coming from an aristocratic family.
بيوتى *biyuuti* /adj invar/ custom-made, tailor-made. *tagliid biyuuti* custom binding.

بيّاتة *bayyaata* /coll n/ *[rur]* travellers and tradesman who are allowed to spend the night in the village guest-house.
بيّاتي *bayyaati* /adverb/ overnight, for the night. *ʕin kunt[a] ɛayiz-ha bayyaati yibqa tidfaɛ muqaddam* if you want it for the night then payment should be made in advance.
مبيت *mabiit, mubiit* /n/ overnight stop. *taṣriiḥ mubiit [mil]* overnight leave-pass.
بيّت *bayyit* /vt/ **1a** to cause to stay overnight. *ḥa-nbayyit il-firaax fil-xunn* we'll put the chickens in the coop for the night. *bi-nbayyit-ha fil-mayya* we leave them in the water overnight. **1b** to give overnight accommodation to (s.o.). *taɛaala nbayyit-ak ɛandina* come and we'll put you up at our house. **2** to cause to fit (into s.th.). *masaḥ il-xaʃaba ɛaʃaan yibayyit-ha f-rigl iṭ-ṭarabeeza* he planed the piece of wood to make it fit into the leg of the table. **3** to fix (an intention, resolution etc.). *ʃana mbayyit in-niyya ɛala s-safar min ʃimbaariḥ* I decided yesterday that I would travel. **4** to castle (the king, in chess). — /vi/ **5** to spend the night, stay overnight. *bayyitt[i] fil-mustaʃfa* I spend the night in the hospital. **6** to plot, conspire. *humma mbayyitin-lu ɛala ɛalqa* they are planning to beat him up. -vn *tabyiit*; ava/pva *mibayyit*.
¶ *bayyit ɛala* (1) to pay a day's wages in advance to (a casual labourer to secure his labour the following day), as in *miʃ maɛquul il-miqaawil bi-galaalit qadr-u ybayyit ɛala l-ɛummaal bi-nafs-u* it is inconceivable that the contractor, being the grand person he is, should go personally to book the workers for the next day. (2) to make a check on (s.o. or s.th.) for the night, as in *ʃamm-aruuḥ ʃabayyit ɛala l-firaax* I'll be off to check on the chickens for the night. (3) to put one over on (s.o.), as in *bayyit-ha ɛaleek* he had the last laugh at your expense.
تبييتة *tabyiita* /n/ **1** instance noun of *tabyiit*. **2** advance payment (to casual labourers). *bi-yiddii-hum tabyiita ɛaʃaan yiṭlaɛu f-fuxl[i] taani yoom* he gives them a day's pay in advance to ensure that they will turn up for work the next day. **3** a game in which someone hides something in a heap of dirt or sand, divides the heap into two parts and then asks those present to guess in which part the object is hidden.
اتبيّت *ʃitbayyit* /vi/ passive of *bayyit*. -iva *mitbayyit*.

ب ي ت [2]
بيتة *biita* <It *bitta*> /n pl *biyat*/ bitt, bollard.

ب ي ت [3] see: ب ي ا ت *bayaati*

ب ي ت ت
بيتّة *bayitta* <perh It *paglietta*> /n pl *-aat*/ small pearl sequin for ornamenting a costume, paillette.

(ب ي ج)
بيج *beej* <prob Fr> /adj invar/ beige (in colour).
بيجة *beega* <prob It *piega*> /n pl *-aat*/ turn-up, cuff (of trousers).

ب ي خ see: ب و خ *baayix, ʃabyax, bayaaxa, bayyax, ʃistabyax*

ب ي د [1]
باد *baad (i)* **1** /vt/ to exterminate, eradicate. **2** /vi/ to become extinct. -ava *baayid, baaʃid↑*.
بائد *baaʃid* /adj */ extinct. ‖ *ʃil-ɛahd il-baaʃid* the pre-Revolution era in Egypt.
أباد *ʃabaad↑* = *baad*. -vn *ʃibaada*; ava *mubiid*; pva *mubaad*.
مبيد *mubiid* /n pl *-aat*/ insecticide, pesticide.

ب ي د [2] see: ب ي ا د *biyaada*

ب ي د ق
بيذق، بيدق *beedaq* /n pl *bayaadiq*/ pawn (in chess).

ب ي ر [1]
بؤرة *buʃra↑* /n pl *buʃar*/ focus, focal point. ‖ *dool buʃrit fasaad* they're a bunch of scoundrels.
بؤري *buʃri↑* /adj */ focal. *ʃil-buɛd il-buʃri* focal distance.
بير، بئر *biir* /n pl *ʃabyaar, biyaar*/ **1** well. *faḫt il-biir bi-ʃibra [prov]* digging a well with a needle. ‖ *(ma-nta ɛaarif) il-biir wi-ṭaṭaa* (well, you know) the ins and outs of it. *-sirr-ak fi-biir* ≈ your secret is safe with me. **2** shaft, manhole. *biir sillim* stair-well. *biir saqya* a brick-lined shaft in which a water-wheel is mounted.
بيّارة *bayyaara* /n pl *-aat*/ **1** manhole. **2** drainage well (of a house).

ب ي ر [2]
بيرة *biira* <It *birra*> /n/ beer.

ب ي ر ا
بيرا *biira* <It *vira*> /interj/ *[naut]* raise! heave! *biira l-muxṭaaf* up anchor!

ب ي ر ق
بيرق *beeraq* <T *bayrak*> /n pl *bayaariq, bawaariq*/ banner, standard (especially of a Sufi order).

ب ی ر و ت
بيروت *bayruut* /prop n/ Beirut.
بيروتي *bayruuti* **1** /n pl *-yya/* a person from Beirut. **2** /adj/ coming from or pertaining to Beirut.

ب ی ر ی ا
بيوريا *bayuriya* <Engl> /n/ pyorrhoea.

ب ی ر ی ه
بيوريه *biyureeh* <Fr *purée*> /adj invar/ puréed, mashed, creamed.

ب ی ز
بيز *biiz* <T *biz*> /n pl *biyaaz*/ awl, bodkin.

ب ی ز ن ط
بيزنطة *biizanṭa* /prop n/ Byzantium.
بيزنطي *biizanṭi, bizanṭi* /adj */ **1** Byzantine. **2** futile, fruitless. *munaqʃa biizanṭiyya* a futile discussion.

ب ی ز و
بيزو *biizu* <Fr *biseau*> /n/ *print]* **1** bevelling. **2** drilling out the background of an engraving plate.

ب ی س ب س
بيسبس *baysibs* <Engl> /n/ *[anat]* biceps. - also *baay*.

ب ی ش [1]
بيّش *bayyiʃ* /vi/ to apply a treatment or coating of size. *ḥa-nbayyiʃ ʕalee* we'll treat it with size. - also *bawwiʃ*. - vn *tabyiiʃ*; ava *mibayyiʃ*.

(ب ی ش) [2]
بيش *beeʃ*[1], *biiʃ* <T *beş*> /n pl *-aat/* five (on dice etc.). ‖*ʃeeʃ beeʃ* half-blind.
بيش *beeʃ*[2] /n/ *[text]* a defect in cloth, occasioned by the shuttle running out of thread.
بيشة *beeʃa, biiʃa* <T *peçe*> /n pl *biyaʃ, biʃaat/* veil of very thin material.

ب ی ص
بيص *beeṣ: fi-ḥeeṣ beeṣ* at a complete loss.

ب ی ض [1]
باض *baaḍ (i)* /vi/ to lay an egg. ‖*baḍit-lu fil-ʔafaṣ* good fortune just fell into his lap. - *lamma tbiiḍ* ((not) even if you laid an egg) ≈ no matter what you do, never. - *baaḍ ʕala* to long for (s.th.), be dying for (s.th.). - *ʃil-beeḍ baaḍ min taḥt[i] raas-u* (he was so lazy that) the eggs laid eggs under his (recumbent) head. - vn *beeḍ, bayaḍaan*; ava *baayiḍ*.
بيض *beeḍ* /coll n/ **1** egg(s). ‖*beeḍ ʕuyuun* fried eggs. - *beeḍ ʃamm in-nasiim* hard-boiled eggs coloured for the Shamm in-Nasim festival. **2** testicle(s). ‖*beeḍ il-ʕigl* (1) large round yellow variety of mango. (2) hearts (in cards).
بيضة *beeḍa* /n/ **1** /unit n, pl *-aat/* an egg. *ʃil-beeḍa ma-tiksar-ʃ il-ḥagar [prov]* an egg can't break a stone. *ʃilli yisraq il-beeḍa yisraq ig-gamal [prov]* he who steals an egg will steal a camel. ‖*qaaʕid ʕala beeḍa* (sitting on an egg) on tenterhooks. - *lissa ma-ṭliʕ-ʃ[i] mil-beeḍa* (he still hasn't emerged from the egg) he's still wet behind the ears. - *bi-yilʕab bil-beeḍa wil-ḥagar [prov]* (he juggles with the egg and stone) he's very adroit. - *laqet-ha beeḍa mqaʃʃara* ≈ I found it ripe for the picking, or ready for the taking. - *law kaanit il-beeḍa liiha widneen yiʃiluu-ha ʃitneen [prov]* ≈ a problem, however small, is better shared. **2** /dual and pl *buyuuḍ, biḍaan, beeḍ*/ testicle. **3** /pl *-aat/ [mech]* ball-joint.
بيضاوي *bayḍaawi* /adj invar/ egg-shaped, oval.
بيوضة *buyuuḍa* /n pl *-aat/* **1** *[anat]* ovum. **2** *[bot]* ovule.
بيّاضة *bayyaaḍa* /adj/ laying, producing eggs. *firaax bayyaaḍa* laying hens.
مبيض *mabyaḍ* /n pl *mabaayiḍ/* **1** ovary. **2** *[bot]* stamen.
اتباض *ʔitbaaḍ* /vi/ to be laid (of an egg). - iva *mitbaaḍ*.
بيّض *bayyaḍ*[1] /vt/ to keep (s.o.) on tenterhooks. - vn *tabyiiḍ*; ava/pva *mibayyaḍ*.
اتبيّض *ʔitbayyaḍ*[1] /vi/ to be kept on tenterhooks. - iva *mitbayyaḍ*.

ب ی ض [2]
أبيض *ʔabyaḍ* /adj, fem *beeḍa*, pl *biiḍ*/ **1** white. *ʔabyaḍ zayy il-laban* as white as milk. *bafta beeḍa* bleached calico. ‖*ḥagar ʔabyaḍ* limestone. - *qalb-u ʔabyaḍ* he is good-hearted. - *waḥda la ʔabyaḍ wala ʔaḥmar* one who doesn't powder or paint her face. - *nahaar-ak ʔabyaḍ* have a good day! - *ya xabar ʔabyaḍ [euphem]* what bad news! - *mayya beeḍa [path]* glaucoma. - *ṭabaqa beeḍa [dent]* enamel. - *ʔid-daar il-beeḍa* Casablanca. - *ʔil-baḥr il-ʔabyaḍ (il-mutawassiṭ)* the Mediterranean Sea. - *ʔil-beet il-ʔabyaḍ* the White House, in Washington. - *laḥma beeḍa* (1) fat. (2) the flesh of poultry, game and white fish. - *zeet ʔabyaḍ* poppy-seed oil. - *silaaḥ ʔabyaḍ* any blade used as a weapon. - *dahab ʔabyaḍ* (1) white gold. (2) gold alloyed with silver or platinum. - *xaʃab ʔabyaḍ* whitewood. - *qirf[i] ʔabyaḍ* half-piastre coin. *ma-ʕanduu-ʃ la ʔabyaḍ wala ʔiswid* he is penniless.

ʔil-ɡirf il-ʔabyaḍ yinfaɛ fil-yoom il-ʔiswid [prov] ≈ even a little money helps when times are bad. **2** light grey (of a horse). **3** transparent (of glass etc.). — /n/ **4** blank (in dominoes).

أبيضانى *ʔabyaḍaani* /adj */ fair-complexioned (of males only).

بياض *bayaaḍ* /n/ **1** whiteness. *bayaaḍ ɛenee* the whites of his eyes. ‖ *ʔirmi bayaaḍ-ak* cross my palm with silver! (said by fortune-tellers). - *ʔiddaa-li fiik ɛala bayaaḍ* he gave me a blank cheque. **2** white (of an egg). **3a** whitewash. **3b** plaster. **3c** size. **3d** bleach. **4** (as a euphemism for *zift* q.v.) tar. **5** tin plating. **6** mildew (as a plant disease). **7** /coll n/ edible Nile fish (Bagrus bayad).

بياضة *bayaaḍa* /n pl *-aat*/ **1** unit noun of *bayaaḍ* 7. **2a** blank space (in a sheet of writing, printing etc.). **2b** double blank (in dominoes). **3** dust-cover (for furniture etc.). — *bayaḍaat* /pl n/ **4** (bed or table) linen.

البياضيّة *ʔil-bayaḍiyya* /n/ museum of coaches and carriages in the former royal stables in Zamalek.

بيّض *bayyaḍ*[2] /vt/ **1** to whiten. ‖ *bayyaḍ wiff-u-hum* he made them proud of him. **2** to bleach. **3** to whitewash. **4** to plaster. **5** to tin, cover with a film of alloy. **6** to hull (rice). **7** to produce a fair copy from a rough draft. - vn *tabyiiḍ*; ava/pva *mibayyaḍ*.

تبييضة *tabyiiḍa* /n pl *-aat*/ **1** instance noun of *tabyiiḍ*. **2** fair copy.

مبيّض *mibayyaḍ* /n */ **1** whitewasher. **2** plasterer. **3** tinner.

مبيّضاتى *mibayyaḍaati* /n pl *-yya*/ = *mibayyaḍ*.

اتبيّض *ʔitbayyaḍ*[2] /vi/ passive of *bayyaḍ*[2]. - iva *mitbayyaḍ*.

ابيضّ *ʔibyaḍḍ* /vi/ to become white. - ava *mibyiḍḍ*.

مبيضّة *mibyaḍḍa* /n pl *-aat*/ fair copy.

استبيض *ʔistabyaḍ* /vt/ to select for whiteness. - ava *mistabyaḍ*.

ب ى ط ر see ب ط ر[2] : *biṭaar, biṭari*

ب ى ع[1]

باع *baaɛ*[2] *(i)* /vt/ **1** to sell. *maḥallaat bi-tbiiɛ bil-ɣaali* high-priced stores. *bi-ybiiɛ il-mayya f-ḥaarit is-saqqayiin [prov]* (he sells water in the water-sellers' quarter) ≈ he carries coals to Newcastle. *baaɛ illi ɡuddaam-u wi-lli waraa* (he sold all he possessed) he was left without money or property. **2** to expose, betray, turn (s.o.) over, let (s.o.) down. *baɡa kida tbiɛ-ni wi-l-miin - lin-naas il-kilaab dool* is that how you give me away - and to such terrible people! — /vi/ **3** to find a good market. *ʔil-ʔusṭuwaana baaɛit kitiir* the record sold well. - vn *beeɛ, biyaaɛa*; ava *baayiɛ*.

بيعة *beeɛa* /inst n, pl *-aat*/ **1** a (single) sale. ‖ *ɛal-beeɛa* or *fooq il-beeɛa* to be taken free (with purchased goods), as in *wi-xud is-samaka l-ḥilwa di min ɛandi fooq il-beeɛa* and take this nice fish from me into the bargain! **2** lot (in an auction etc.).

بياعة *biyaaɛa* /vn/ ‖ *kazlak biyaaɛa [butcher]* dressing knife.

بايع *baayiɛ* /n */ **1** seller, salesman. **2** /also pl *bayyaaɛa*/ street hawker, vendor.

بيعة *bayɛa* /n pl *-aat*/ *[Isl]* act of formal acknowledgement of (a ruler's) authority.

بيّاع *bayyaaɛ* /n */ seller, vendor, salesman. ‖ *ʔiḍḍallaɛ ɛal-bayyaaɛ* ≈ to play hard-to-get, as in *kull*[i] *ma ʔanadii yaakul ma-yirḍaa-ʃ tiqul-ʃ*[i] *b-yiddallaɛ ɛal-bayyaaɛ* whenever I call him to eat he refuses as if he's leading on a salesman.

مبيع *mubiiɛ*↓ /n/ selling, sale. *ʔil-mubiiɛ bin-naqd*[i] *bass* cash sales only.

مبيعات *mabiɛaat* /pl n/ **1** sales. *mudiir il-mabiɛaat* the sales manager. **2** *(qism)* *ʔil-mabiɛaat* the sales department.

اتباع *ʔitbaaɛ* /vi/ to be sold. - iva *mitbaaɛ*.

انباع *inbaaɛ* = *ʔitbaaɛ*. - iva *minbaaɛ*.

بيّع *bayyaɛ* /vt/ to cause to sell. *bayyaɛuu-ni lli waraaya wi-lli ɡuddaami* they brought about my financial ruin. - ava *mibayyaɛ*.

بايع *baayaɛ* /vt/ *[Isl]* to make formal acknowledgement of the authority of (a ruler). - vn *mubayɛa, mubaayaɛa*[†]; ava *mibaayiɛ*.

مبايعة *mubayɛa* /n pl *-aat*/ contract of sale, bill of sale.

استبيع *ʔistabyaɛ* /vi/ to act recklessly. *ʔistabyaɛt*[i] *wi-staɡalt*[a] *ɛala ṭuul* I said damn the consequences, and resigned straight away. - vn *ʔistibyaaɛ*; ava *mistabyaɛ*.

ب ى ف

بيّف *bayyif* <Engl *pay off*> /vt/ to pay in full and discharge (a seaman or crew). - vn *tabyiif*; ava/pva *mibayyif*.

ب ى ك see ب ى ه

ب ى ك ا

بيكه *beeka* <Engl> /n pl *-aat*/ piqué (fabric).

(ب ى ك ن)

بيكون *biikun* <Engl> /n pl *-aat*/ beacon.

بيكن *beekun* <Engl> /n/ bacon.

ب ى ل ا
بيلا *beela: heela beela* and *ʃeela beela* heave! heave-ho!

ب ى ل ل
بيل *biyill* <Fr *bielle*> /n pl *-aat*/ piston connecting-rod.

ب ى ن
بان *baan (a)* /vi/ to appear, become manifest or visible. *ʃutubiis baan fi-ʃaaxir if-ʃaariɛ* a bus came into sight at the end of the street. *ʃil-ħaqq[i] ybaan [prov]* truth will out. *da baayin lina* that's apparent to us. *ʃiz-zaɛal baayin ɛaleek* you're clearly upset. *waqɛit-ak bayna* you're in for trouble. ‖*ɛala wiff-ak yibaan ya maddaar il-libaan [prov]* ≈ nothing you do can be kept secret for ever. - ava *baayin, baaʃin↑*.
باين *baayin* /ava w adverbial function/ it is evident that ..., apparently. *baayin (ɛaleeha) ħa-tmaṭṭar* apparently it is going to rain. *baayin ʃinnak miʃ ħa-tnaffiz l-ittifaaq* it looks as if you are not going to implement the agreement. *baayin ʃaxuu-k miʃ ħa-ygib-ha l-barr* it seems that your brother is not going to behave reasonably.
بائن *baaʃin↑* /ava/ ‖ *ʃiṭ-ṭalaaq baaʃin [Isl law]* the divorce is irrevocable.
بين *been[1]* /prep/ **1** between. *ʃil-ħaara been il-bank[i] wil-lukanda* the alley is between the bank and the hotel. *kaan fii ma been ɛafara w-xamastaaʃar kitaab ɛala l-maktab* there were between ten and fifteen books on the desk. ‖*beeni w-beenak* frankly speaking. - *kaanit farħaana benha w-been nafs-a-ha* she was rejoicing inwardly. - *been il-beneen* between the two extremes. - *been in-nahreen* Mesopotamia. **2** among, in the midst of. *ʃin-naas illi-nta ɛaayiʃ benhum* the people among whom you are living.
¶ *been ... wi-(been)* what with ... and ..., as in *tiɛibt[i] xaaliṣ been il-ɢaraayib wil-ɛiyaal* I got completely worn out, what with the relatives and the children.
بين *been[2]* /n/ ill omen. *ɣuraab il-been* bird of ill omen, one who brings bad news or misfortune.
بينين *beneen: been il-beneen* between the two extremes, taking a middle course.
بنات، بينات *benaat, banaat* /prep/ between. *xalli l-ħikaaya benatna* keep the matter strictly between us. ‖*benaat il-ʃaɛyaad* the period (noted by trademen as a slack season) between the two feasts, *ɛiid il-fiṭr* and *ɛiid-il-ʃaḍħa*.
بيّنة *bayyina* /n/ evidence, proof. *ʃil-bayyina ɛala l-muddaɛi* the burden of proof is on the plaintiff. ‖*ħaraami bala bayyina* (he is) a thief with no evidence against him, a lucky person. - *ʃil-ɛayyina bayyina* a sample shows the quality of the whole.
أبين *ʃabyan* /el/ more/most clear.
بيان *bayaan* /n pl *-aat*/ **1** communiqué, account. *bayaan ɛaskari* military communiqué. *ʃiddii-ni bayaan ɛan xibrit-ak is-sabqa* give me a report on your previous experience. **2** demonstration. *bayaan ɛamali* a practical demonstration. **3** penultimate *ħagar* of a hashish-smoking session. **4↑** rhetoric. — *bayanaat* /pl n/ **5** particulars, details. *ʃiktib-lu bayanaat if-fuɣl* write the particulars of the job for him.
¶ *bayaanan: ɛayaanan bayaanan* openly, frankly and publicly, as in *bi-yisraqu kida ɛayaanan bayaanan* they steal openly without any regard for anyone.
بياني *bayaani* /adj/ graphic. *rasm[i] bayaani* a graph.
بيّن *bayyin* /vt/ **1** to reveal, make clear. *ɛaʃaan yibayyin il-ħaqq* in order to reveal the truth. *gihaaz yibayyin iṣ-ṣuura l-manṭiqa muɛayyana* an apparatus which shows the image of a given area. ‖*nibayyin zeen* street call of female shell-diviners. - *ɢumaaʃ bi-ybayyin* sheer material. - *ʃiʃ-ʃeex bayyin karaama* the saint has given a sign. **2↑** to state, declare. - vn *tabyiin*; ava *mibayyin*.
اتبيّن *ʃitbayyin* /vi/ to become clear. - ava *mitbayyin*.
مباينة *mubayna↑* /n/ difference, disharmony.
اتباين *ʃitbaayin* /vi/ to make an impressive show. *ɛaawiz yitbaayin ɢuddaam in-naas* he wants to make a good impression on people. - ava *mitbaayin*.
تباين *tabaayun↑* /n pl *-aat*/ difference, disharmony. *fii tabaayun been maṣaliħ-na* we have conflicting interests.
متباين *mutabaayin↑* /adj */ different, contradictory.
أبان *ʃabaan↑* **1** /vt/ to cause to be clear, indicate. **2** /vi/ to be obvious, clear or outstanding. *naṣr[i] mubiin* an outstanding victory. - vn *ʃibaana*; ava *mubiin*.
استبان *ʃistabaan, ʃistibaan↓* /vi/ to pan out, become clear. *ʃahu l-ħaqq istabaan* truth will out. - vn *ʃistibaana↑* ; ava *mistibiin*.
استبيان *ʃistibyaan* /n pl *-aat*/ questionnaire.

ب ى ه [1]
بيه، بك *beeh[1]* <T *bey*> /n pl *bahawaat*/ Bey, formerly a title of, and form of address and reference to, second-highest ranking officers and officials, now used loosely to indicate respect or to flatter.
بهواتي *bahawaati* /adj invar/ luxurious, grand.
بهويّة *bahawiyya* /n/ rank of Bey.
بكويّة *bakawiyya* /n/ rank of Bey.

ب ى ه [2]
بيه *beeh[2]* /fem n, pl *-aat*/ second letter of the Arabic alphabet. - also *baaʃ, bih*.

ب ى ى

بىّ *bayy* <Engl> /n/ *[naut]* paybill.

ب ى ى ه

بييه *biyeeh* <Fr *biais*> /n/ **1** bias (in fabric). *firiiṭ biyeeh* bias binding. **2** /pl *-aat*/ *[needlew]* false tuck.

ب ى ى و م

بيّومى *bayyuumi* **1** /adj pl *-yya*/ of or pertaining to the Bayyumi order. **2** /n pl *-yya*/ a Bayyumi.

البيّوميّة *ʔil-bayyumiyya* /prop n/ Sufi order named after Sayyid Ali el-Bayyumi.

ت

ت ا

تا *taa* /fem n, pl *-haat*/ third letter of the Arabic alphabet. - also *taaʕ, tih, teeh*.

ت ا ء

تاء *taaʕ* /fem n, pl *-aat*/ third letter of the Arabic alphabet. - also *taa, tih, teeh*.

ت ا ت ا

تاتا *taata* /interj/ exhortation to a child learning to walk, particularly in the phrase *taata taata xaṭṭi l-ɛataba* come on, come on till you step over the threshold.

ت ا ج see ت و ج : *taag*

ت ا ر [1]

تارة *taraaʔ : taara ... taara ...* /adv/ sometimes ... sometimes ... : *taara yimʃi w-taara yirkab* he sometimes walks and sometimes rides.
¶ *taaratan* /adv/ sometimes.

ت ا ر [2]

تار، تأر *taar* /n/ revenge. *ḥ-aaxud bi-taar-u* or *ḥ-axallaṣ taar-u* I shall avenge him. *beeni w-beenu taar* there's a feud between him and me.

ت ا ز see ط ا ز : *taaza*

ت ا ش

تاشة *taaʃa* <Fr *tache*> /n/ *[cin]* hot spot.

ت ا ى

تاى *taay* /adj/ alloyed and brittle (of gold).

ت ء ت ء

تأتأ *taʕtaʕ* /vi/ to stutter over the pronunciation of the letter *t*. - vn *taʕtaʕa*; ava *mitaʕtaʕ*.

ت ب ب [1]

تبّة *tabba* <T *tepe*> /n pl *-aat, tibab*/ **1** *[mil]* wall acting as backstop behind targets on a range. *tabbit ḍarb in-naar* target area of a firing range. **2** hillock.

ت ب ب [2]

استتبّ *ʕistatabbʔ* /vi/ to become stable, become firmly established. *ʕin-niẓaam istatabb* order was established. - vn *ʕistitbaab*; ava *mistitibb, mustatibb*.

ت ب ت see ت ب ت [1] : *tibit, ʕatbat, tabaat, tabaata, tabiit, tabbit, ʕittabbit*

ت ب ت ب

تبتبة *tabtaba* /n/ **1** intelligence, cleverness, wittiness. **2** experience.
متبتب *mitabtib* /adj */ **1** intelligent, clever. **2** experienced. *da raagil mitabtib ɋawi f-ʃuɣl-u* this man has really got experience in his work.

ت ب ر

تبر *tibr* /n/ gold ore. *yixalli t-turaab tibr* he (or it) turns dust into gold, he (or it) works miracles.

ت ب ر ى ه

تابوريه *tabureeh* <Fr *tabouret*> /n pl *-aat*/ stool, foot-stool.

ت ب ش ى ر see ط ب ش ى ر : *tabaʃiir, tabaʃiira, tabaʃiraaya*

ت ب ع

تبع *tabaɛ* [1] *(a)* /vt/ **1** to follow, go after, tail. *ʕataari l-ḥaraami tabaɛ-ni mneen ma-ruḥt* it turned out that the

thief was following me wherever I went. *ʃitbaɛ il-buum yiwaddii-k il-xaraab [prov]* follow the owl (i.e. an evil person) and he will lead you to destruction. **2** /imperf and ava only/ to be subordinate to, be attached to, pertain to. *bi-yitbaɛ-u ɛiddit ɛummaal* a number of workers are under him. *ʃil-muʃassasa lli b-titbaɛ-ha l-mustaffayaat* the organization to which the hospitals are attached. *kull[i] da taabiɛ lil-ʃaɤziya wil-mafrubaat* all this pertains to victuals and drinks. - vn *tabaɛ, tabaɛiyya*; ava *taabiɛ*; pva *matbuuɛ*.

تبع *tabaɛ*[2] preposition indicating **1** possession. *ʃik-kursi da mif tabaɛ-na* this chair doesn't belong to us. **2** affiliation. *baɛeet tabaɛ il-ɛiṣaaba di* I became a member of this gang. *ʃil-maḥkama lli l-wakiil tabaɛ-ha* the court to which the legal representative belongs. *ʃiḥna tabaɛ il-qanuun raqam talattaafar* we come under Law No. Thirteen. *ʃana b-aftaɤal tabaɛ il-miɛallim* I work for the *miɛallim*. **3** accordance. *tabaɛ taḥliil-i liz-zubuun* according to my analysis of the customer. ¶ *tabaɛ ma* /conj/ according to what. *bi-yiṭṣarraf tabaɛ ma ttafaqtu* he acts as you agreed.

تبعيّة *tabaɛiyya* /n/ **1** citizenship. *ɛandu tabaɛiyya ʃingiliizi* he has British nationality. **2** /coll/ subject(s). *ʃil-malṭiyyiin kaanu tabaɛiyyit ʃingiltira* the Maltese were British subjects.

¶ *bit-tabaɛiyya* /adv/ subsequently, consequently.

تابع *taabiɛ*[1] /n pl *ʃatbaaɛ*/ **1** follower, supporter. *min ʃatbaaɛ ɛabd in-naaṣir* one of Nasser's followers. **2** retainer, protégé, yes-man. -/adjectivally/ *raagil taabiɛ* a submissive man.

تبّع *tubbaɛ: ɋibṭi tubbaɛ* /pl *ʃaɋbaaṭ tubbaɛ*/ *[Chr]* Coptic Catholic.

تبّاع *tabbaaɛ* /n pl *-iin, tabbaaɛa*/ all-purpose truck-hand, driver's mate.

تبّيع *tabbiiɛ* /n pl *tabbiiɛa, tababiiɛ*/ = *tabbaaɛ*.

تابع *taabiɛ*[2] /vt/ **1** to follow, go in pursuit of. *ʃana tabiɛt-a-ha b-naẓar-i l-ɤaayit ma daxalit il-beet* I followed her with my eyes until she entered the house. **2a** to follow up, pursue. *fii mafruuḍ mitabɛa mil-mufattiʃ* there is supposed to be follow-up by the inspector. **2b** to keep up with. *ʃil-muḥaami laazim yitaabiɛ il-qawaniin ig-gidiida* a lawyer must keep up with the new laws. **3** to keep on doing, continue. *ʃid-duktoor laazim yitaabiɛ id-diraasa* a doctor must keep on studying. - vn *mitabɛa, mutabɛa*; ava *mitaabiɛ*.

اتّابع *ʃittaabiɛ* /vi/ to follow in succession. *sibaaɋ tataabuɛ* relay race. - vn *tataabuɛ↑*; ava *mittaabiɛ*.

اتّبع *ʃittabaɛ↑* /vt/ **1** to follow, pursue. *tann-u mittibiɛ-ha l-ɤaayit ma wiṣlit il-maktab* he trailed her until she got to the office. **2** to adhere to, adopt (a method, policy.). *ʃiṭ-ṭuruɋ illi mumkin yittibiɛ-ha l-ʃinsaan* the paths which a man can follow. -/the literary passive imperf form occurs in elevated speech/ *ʃiṭ-ṭuruɋ illi tuttabaɛ* the paths which are (to be) followed. - vn *ʃittibaaɛ*; ava *mittibiɛ*; pva *muttabaɛ*.

استتبع *ʃistatbaɛ↑* /vt/ to entail, engender, have as a consequence. - vn *ʃistitbaaɛ*; ava *mistatbiɛ*.

ت ب ل

توابل *tawaabil* /pl n/ hot seasonings and spices, condiments.

تبّل *tabbil* /vt/ to season, spice. - vn *tatbiil*; ava/pva *mitabbil*.

اتّبّل *ʃittabbil* /vi/ to be seasoned, be spiced. - iva *mittabil*.

ت ب ل و ن see ت ب ل و ه : *tabloon*

ت ب ل و

تابلوه *tablooh* (also *tabloon, ṭabloon*) <Fr *tableau*> /n pl *-aat, tablowaat*/ **1** panel, board. *tablooh ɛarabiyya* dashboard. *tablooh kahraba* fuse-board, meter cupboard. **2** wall picture, mural. **3** *[text]* drawframe.

ت ب ن

تبن *tibn* /n/ chopped straw. ‖*tibn aḥmar* straw of *barsiim*. - *mayya min taḥt[i] tibn* snake-in-the-grass.

تبّان *tabbaan* /n pl *tabbaana*/ *[obsol]* straw-seller.

تبّانة *tabbaana* /n pl *-aat*/ storage place for *tibn*, barn. ‖*darb* (or *sikkit*) *it-tabbaana* the Milky Way.

متبن *matban* /n pl *mataabin*/ storage place for *tibn*, barn.

متبنة *matbana* = *matban*.

ت ب ه see also ن ب ه

تبّه *tabbih* /vt/ to arouse the interest of (s.o., in s.th.). *tabbih il-waad fil-liɛba ɛaʃaan yixallii-ni ʃaʃtiri-haa-lu* he put the toy under the boy's nose so as to make me buy it for him. *tabbih-u fil-ḫikaaya di* get him interested in this matter. - vn *tatbiih*; ava/pva *mitabbah*.

اتّبّه *ʃittabbih* /vi/ to have one's interest aroused. - iva *mittabbih*.

ت ب و ت

تابوت *tabuut* /n pl *tawabiit*/ **1** metal scoop wheel used in irrigation (see Pl.E, 22). **2** irrigation device similar to the *saqya* (see Pl.E, 1), but which raises water by means of a metal scoop instead of a wooden water-wheel.

‖ *ɛalee ħiss[i] wala t-tabuut* he has a very ugly voice (especially in singing). **3** sarcophagus.

ت ب ى ه
تبيه *tabeeh* <Fr *tapis*> /n pl *-aat*/ canvas, mat (in wrestling, boxing).

(ت ت ر)
تترى *tatari* /n pl *tatar, tataar*/ a Tartar. *ʕitlammu ɛalee zayy it-tatar* they rushed upon him.
التيتر *ʕit-titr* <Fr *titre*> /n/ *[cin]* the credits.

ت ت ر ك –
تتراكورد *titrakurd* <Engl> /n/ *[mus]* tetrachord.

ت ت ك
تيتك *titik* <T *tetik*> /n pl *-aat*/ trigger (of a gun).

ت ت ن و س
تيتانوس *titanoos* <Engl> /n/ tetanus.

ت ت و ر
تتورة *tatuura* /coll n/ *[bot]* datura. - also *datuura, dahtuura, ṭaṭuura.*

ت ت ى ا
توتيا *tutya* /n/ **1a** type of collyrium with a zinc base (particularized as *tutya beeḍa*). **1b** copper sulphate (particularized as *tutya zarqa*). **2** /coll/ squid(s). — /adj invar/ **3** *[obsol]* disastrous, calamitous. *gawaaza tutya* a disastrous marriage.

ت ج ا ه see و ج ه : *tigaah, tugaah*

ت ج ر
تجارة *tigaara, tugaara* /n/ **1** trade, commerce. *tigaarit ig-gumla* the wholesale trade. *dibloom tigaara* diploma in commercial studies. ‖ *ʕit-tigaara fil-xusaara xusaara* failure breeds failure. **2** /pl *-aat*/ business, commercial venture. *ɛanduhum tigaraat fi-kull[i] ħitta* they have business dealings everywhere.
تجارى *tigaari, tugaari* /adj */ **1** commercial. *ʕil-ɣurfa t-tugariyya* the Chamber of Commerce. *ʕil-baħriyya t-tugariyya* the Merchant Navy. ‖ *bi-yiftaɣal tugaari* he works fast and carelessly. **2** wholesale (of price).
تاجر *taagir[1]* /n pl *tuggaar*/ **1** (male) trader, (male) merchant or dealer. *tuggaar il-muxaddaraat* narcotics dealers. *tuggaar tagziʕa* retail merchants. ‖ *tuggaar if-fanṭa* persons who traffic goods in suitcases between countries. - *ɛala ɛeen-ak ya taagir* ≈ openly, without fear or shame, as in *kaʃʃa ḍahr-a-ha kida ɛala ɛeen-ak ya taagir* she is exposing her back for all to see. **2** opportunist.
متجر *matgar* /n pl *mataagir*/ place of business, place of commerce.
تاجر *taagir[2]* /vi/ **1** to trade, conduct commercial business, deal. *bi-ntaagir fil-biḍaaɛa l-mistawrada* we deal in imported merchandise. *taagir bi-sm-i-na* he traded using our name. *ħisaab mitagra* a trading account. **2** to take advantage, profit unscrupulously. *bi-ytaagir bil-waṭaniyya* he is exploiting nationalism. - vn *mitagra*; ava ***mitaagir***.
اتاجر *ʕittaagir* /vi/ to deal, do business. *kaanu b-yittagru fil-muxaddaraat* they were pushing drugs. - vn *ʕittigaar[1]*; ava *mittaagir*.

ت ج ز
تجزة *tagza* /n/ character. *ma-luu-ʃ tagza* he's unpredictable, he's inconsistent.

ت ج و س
تجوس *taguus* /n/ *[naut]* transverse plank bridging centre of Nile sailing boat.

ت ح ت
تحت *taħt* **1** /prep, w pron suff also *taħtii-*/ beneath, below, under. *min taħt it-ṭarabeeza* from under the table. *ɛimaara taħtiiha* (or *taħtaha* or *taħt[i] minha) garaaj* a building with a garage under it. *taħt[i] riyast-u* under his command. *ħaṭṭeet is-sikkiina taħt if-faraab* I put the knife inside my sock. *taħt il-muraqba* (1) under surveillance. (2) on parole. ‖ *taħt[a] ʕamr-ak* (I am) at your disposal! - *taħt ir-riiħ* downwind, leeward. - *taħt[i] min* immediately following (in age, position, ranking etc.), as in *huwwa ʕaxuu ʕilli taħt[i] minnu* he's his next youngest brother, *miʃ il-beet da - laʕ - ʕilli taħt[i] minnu* not this house but the one beyond it. - *ʕaʃiɛɛa taħt il-ħamra* infra-red rays. - *taħt il-ħisaab* on account. - *taħt iṭ-ṭalab* on demand. - *taħt il-ʕarḍ* and *min taħt il-ʕarḍ* see *ʕarḍ*. **2** /adv/ below. *humma nizlu taħt* they have gone down, they have gone downstairs. *min fooq li-taħt* from top to bottom. *ʕiṭlaɛ min taħt* come out from underneath. *nazzil raas-u l-taħt* he hung down his head. ‖ *min taħt[i] l-taħt* stealthily, covertly, as in *bi-ybuṣṣ[i] min taħt[i] l-taħt* he looks stealthily, *bi-yiftaɣal min taħt[i] l-taħt* he operates behind people's backs.
تحتانى *taħtaani* /adj */ lower. *ʕil-fakk it-taħtaani* the lower jaw.

ت ح ت ح
تحتح *taħtaħ* /vt/ **1** to budge, to move. **2** to dislocate (a

limb). - also *taɛtaɛ*. - vn *taḥtaḥa*; ava/pva *mitaḥtaḥ*.
اتّحتح *ʔittaḥtaḥ* /vi/ passive of *taḥtaḥ*. - iva *mittaḥtaḥ*.

ت ح ف
تحف *taḥaf (i)* /vt/ to make a present to (s.o., of s.th. precious, often used ironically). *taḥaf-ni b-hidiyya* he gave me a valuable gift. - vn *taḥafaan*; ava *taaḥif*; pva *maṯḥuuf*.
تحفة *tuḥfa* /n pl *tuḥaf*/ **1** object of rare beauty or worth, objet d'art. *tuḥaf ʔasariyya* antiquities. *ʔil-ʔaṣnaaf l-qadiima tuɛtabar tuḥaf* the old types are considered to be collector's items. **2** delightfully odd or eccentric person, card. *ʔinta tuḥfa ya-bn-i ʔaaya min ʔayaat allaah* you're a real character, my boy, a gem!
تحفجي *tuḥfagi* /n pl *-yya*/ dealer in objets d'art.
متحف *maṯḥaf* /n pl *mataaḥif*/ museum. ‖ *raagil maṯḥaf* a real character.
اتّحف *ʔittaḥaf* /vi/ passive of *taḥaf*. *ʔittaḥaf bi-muṣiiba* he was hit by a disaster. - iva *mittiḥif*.
أتحف *ʔaṯḥaf*↑ = *taḥaf*.

ت ح ي ¹ see also ح ى ¹
تحى *taḥḥa*↓ /vt/ **1** to salute. **2** to offer hospitality to (s.o.). *zaɛlaan ɛafaan ma-ḥadd*ⁱ*-ʃ taḥḥaa lamma zar-na* he's annoyed because no one offered him hospitality when he visited us. - vn *taḥiyya*; ava *mitaḥḥi*.
اتّحى *ʔittaḥḥa* /vi/ passive of *taḥḥa*. - iva *mittaḥḥi*.

ت ح ى ² see و ح ى ²: *ʔittaḥa*

(ت خ ت)
تخت *taxt* <P *takht*> /n pl *tuxuut*/ **1** platform, dais. **2** group performing Arabic music. **3** (woman's) full posteriors. *ya taxt* flirtatious address to a woman with large posteriors.
تختة *taxta* <P *takhta*> /n pl *tuxat, tuxúta, taxtaat*/ **1** school desk and chair set. **2** blackboard.
تخت *tixit* /adj */ well-built, stout.

ت خ ت ب –
تختبوش *taxtaboof* <P *takhta-posh*> /n pl *-aat*/ *[obsol]* covered recess of the courtyard of an old house, in which guests may be entertained without entering the private rooms.

ت خ ت خ
تختخ *taxtax* /vi/ to become plump. - vn *taxtaxa*; ava *mitaxtax*.
اتّختخ *ʔittaxtax* = *taxtax*. - ava *mittaxtax*.

ت خ ت ر –
تختروان *taxtarawaan* <P *takhti-rawân*> /n pl *-aat*/ *[obsol]* camel-borne litter in which a bride is conveyed during the *zaffa*.

ت خ د see ء خ د: *ʔittaaxid*

ت خ ر see also ء خ ر
تاخر *taaxir* /vt/ to move aside. *taaxir rigl-ak ʃiwayya* move your leg (out of the way) a little. - vn *mitaxra*; ava/pva *mitaaxir*.
اتاخر *ʔittaaxir* /vi/ to move or be moved aside or out of the way. - ava/iva *mittaaxir*.
استاخر *ʔistaaxir*↓ = *ʔittaaxir*. - ava *mistaaxir*.

ت خ م
تخم *taxam (i)* /vt/ to cause (s.o.) to feel uncomfortably full of food, surfeit. *taxamt*ⁱ *nafs-i bil-ʔakl* I stuffed myself with food. *ʔil-ʔakl*ⁱ *taxam-ni* the food made me feel over-full. - vn *taxamaan, taxm*; ava *taaxim*; pva *matxuum*.
تخمة *taxma* /inst n/ a case of overeating.
تخمان *taxmaan* /adj */ bloated, uncomfortably full (of food).
تخمة *tuxma* /n/ indigestion resulting from over-eating. *ʔiftareena fil-ʔakl*ⁱ *lamma l-waaḥid kaan ḥa-ygii-lu tuxma* we stuffed ourselves with food till we almost had indigestion.
اتّخم *ʔittaxam* /vi/ passive of *taxam*. - iva *mittixim*.
انتخم *ʔintaxam* = *ʔittaxam*.

ت خ ن
تخن، ثخن *tixin, tuxun (a)* /vi/ **1** to become thick. **2** to become fat. - vn *tuxn, taxaana*.
¶ *tixin ɛala* to consider oneself too grand for, or above (s.th.). *ḥa-nitxan ɛaf-fuxl illi b-naakul minnu ɛeef* how can we despise the work by which we earn our living.
تخن، ثخن *tuxn* /n/ thickness. *ɛaayiz looḥ tuxn*ⁱ *kaam* how thick a plank do you want?
تخانة، ثخانة *taxaana* /n pl *-aat*/ thickness. *(makanit) taxaana [carp]* thicknessing-tool, thicknesser. *taxanaat sitta milli w-xamsa milli* thicknesses of 6mm. and 5mm.
تخين، ثخين *tixiin* /adj pl *tuxaan*/ **1** thick (of solids and liquids). *looḥ tixiin* a thick plank. *siluuk tixiina wi-sluuk rufayyaɛa* thick wires and thin wires. *furba txiina* thick soup, viscous soup. *ʔiqtaɛ it-taranʃaat ɛala txiin* cut the slices thick. ‖ *ɛaql-u txiin* or *muxx-u txiin* he's stupid, he's a thickhead. **2** fat. *bint*ⁱ *txiina zayy il-barmiil* a girl as fat as a barrel. **3** deep (of a voice). — /n pl *taxaayin*/ **4** prominent person. *fii ṣanayɛiyya w-fii taxaayin* there

are artisans and there are big-shots.
أتخن، أثخن ʕatxan elative of *tixiin*.
متخن *mitxin* /adj invar/ beefy, solid. *mara mitxin* a buxom wench.
تخّن، ثخّن *taxxan* /vt/ **1** to thicken, (in volume or consistency). **2** to make fat. ʕ*akl il-ḥalawiyyaat bi-ytaxxan* eating sweet foods makes you fat. ‖*taxxan widn(-u)* to flatter (s.o.), swell (s.o.) up with (undue) praise. **3** *[carp]* to reduce (wood) to a given thickness. — /vi/ **4** to become fat. ‖*muxx-u taxxan xaaliṣ* he's become a complete thickhead. - vn *tatxiin*; ava *mutaxxin*↑; ava/pva *mitaxxan*.
متخّن، مثخّن *mutaxxin* /n pl *-aat*/ thickener (in industrial dyeing etc.).
اتّاخن ʕ*ittaaxin* /vi/ to act the bully, behave grossly, be brusque. ʕ*inta ḥa-tittaaxin ɛaleena walla ʕeeh* do you think you are going to push us around? - ava *mittaaxin*.
استتخن ʕ*istatxan* **1** /vt/ to consider (s.o. or s.th.) fat or thick. **2** /vi/ = ʕ*ittaaxin*. - vn ʕ*istitxaan*; ava *mistatxan*.

ت د ل ى ت
تدوليت *tiduliit* <Fr *théodolite*> /n pl *-aat*/ **1** theodolite. **2** transit-compass.

ت ذ ك see ت ز ك ى

ت ر ا see ر ء ى : *ya tara*

ت ر ا س
تراس *tiraas* <Fr *terasse*> /n pl *-aat*/ terrace.

ت ر ا ى
ترای *tiraay* <Engl> /n/ *[anat]* triceps. - also *tiraysibs*.

ت ر ب
تربة *turba* /n/ **1** /pl *turab, turbaat*/ grave, tomb. *bi-ʕaraf-i w-turbit* ʕ*abuu-ya* by my honour and my father's grave! ‖*turba lamma tlimm-ak* ≈ drop dead! - *turba ma-lhaa-ʃ ṣaaḥib* (a grave without an owner) a place with no proper order, somewhere where anything is allowed. **2**↑ (also *turba*) /no pl/ soil. **3** /pl *turab/ turbit ḥaʃiiʃ* a block of hashish packaged, usually, in cloth.
ترب *turab* /pl n/ cemetery.
ترابى *turabi* /n pl *-yya/* **1** cemetery attendant and gravedigger. **2** /adj */ scavenging.
تراب *turaab* /n pl ʕ*atriba*↑/ **1** dust, dirt, earth. *turaab maɛdani* metal dust, metal filings. ‖*nifs-u fit-turaab* ≈ he is very modest. - *bi-turaab il-filuus* dirt cheap. - *yaama t-turaab bi-yaakul [prov]* ≈ the grave gobbles all. - ʕ*alf*[1] *min yitmanna turaab gazmit-u* anybody would be delighted with even the dust off his shoes ≈ he is a most desirable connection. **2** (also *turaab* ʕ*aḥmar*) ash. *tibaat naar tiṣbaḥ turaab [prov]* ≈ here today, gone tomorrow.
ترابة *turaaba* /n/ **1** soil. **2** a speck of dust, a bit of dust.
ترابى *turaabi* /adj/ **1** of or pertaining to earth, soil or dust. *ṭuruq turabiyya* earth roads. **2** dust-coloured.
مترب *mutrib, mitrib* /adj/ dusty, dust-bearing. ʕ*ig-gaww*[i] *mutrib* the weather's dusty.
ترّب *tarrab* /vt/ to cover with dust or ash. ʕ*il-xamasiin tarrabit id-dinya* the *xamasiin* wind covered everything with dust. - vn *tatriib*; ava/pva *mitarrab*.
اترّب ʕ*ittarrab* /vi/ passive of *tarrab*. - iva *mittarrab*.
استترب ʕ*istatrab* /vt/ **1** to select for dustiness. ʕ*il-ḥumaar istatrab-lu ḥitta wi-*ʿ*marrax fil-*ʕ*arḍ* the donkey chose a dusty place and rolled on the ground. **2** to consider dusty. - ava/pva *mistatrab*.

ت ر ب ا س [1]
ترباس *tirbaas*[1] <perh Fr *trapèze*> /n pl *tarabiis/ [anat]* trapezius muscle of the back.

ت ر ب ا س [2] see ت ر ب س [1] : *tirbaas*[2]

ت ر ب ت –
تربّتاتا *tarabattaata* onomatopoeic for the sound of music ≈ ta-ra-ra-boom di-ay.
تربّتى *tarabattati* nonce word for interrupting an asinine conversation.

ت ر ب ر –
تربرتر *tiribirintir* <Engl> /n pl *-aat*/ teleprinter, teletype machine.

ت ر ب ز see ت ر ب ى ز : *tarabiiz*

ت ر ب ز –
تربزين *tarabziin* <perh P *darbazîn*> /n pl *-aat, -aat*/ **1** banister, railing. **2** *[naut]* bulwark. - also *darabziin*.

ت ر ب س [1]
تربس *tarbis* /vt/ to bolt. *baab mitarbis* a bolted door. ‖*muxx-u mtarbis* (1) he's a blockhead. (2) his head is feeling muzzy. (3) he's unreceptive to new ideas. - vn *tarbasa*; ava/pva *mitarbis*.
ترباس *tirbaas*[2] <perh P *dar-basta*> /n pl *tarabiis/* **1** bolt, latch. ‖*ḥaṭṭ il-hamm*[i] *fit-tirbaas* he vented his rage on an innocent person or object. **2** stupidly conservative or narrow-minded person.
اتربس ʕ*ittarbis* /vi/ to be locked. - iva *mittarbis*.

ت ر ب س [2] see ت ر ب ا س [1]: *tirbaas*[1]

ت ر ب ظ see ط ر ب ی ز: *tarabeeza*

ت ر ب ن [1]
تربن *tarbin* /vt/ *[surg]* to trepan. - vn *tarbana*; ava/pva *mitarbin*.
تربنة *tarbana* /n pl *-aat*/ *[surg]* trephine.
اترّبن *ʕittarbin* /vi/ passive of *tarbin*. - iva *mittarbin*.

ت ر ب ن [2] see ت ر ب ی ن: *turbiina, turbiin*

ت ر ب ن –
ترابنتينة *tarabantiina* <It *terebentina*> /n/ turpentine.

ت ر ب ی ز
ترابيز *tarabiiz* <Engl> /n pl *-aat*/ trapeze.

ت ر ب ی ن
تربينة *turbiina* <It *turbina*> /n pl *-aat*/ turbine. *markib turbiina* turbine ship.
تربين *turbiin* <Fr> = *turbiina*.

ت ر ب ی –
تريبيانكو *tiribiyanku* <It *taglio bianco*> /n/ cut of meat consisting of a whole thigh muscle. - also *tilibiyanku*.

ت ر ت
تورتة *turta* <It *torta*> /n pl *-aat, turat*/ large fancy creamy cake. - also *ṭurṭa*.

ت ر ت ر
ترتر *tirtir* /coll n/ spangle(s), sequin(s).
ترترة *tirtira* /n pl *-aat, taraatir*/ **1** /unit n/ a spangle, a sequin. ‖*ʕeen-u zayy it-tirtira* his eyes are as (small as) sequins. - *ḥ-addii-lu fit-tirtira* I'll give it to him where it hurts most! **2** jingle (on tambourine). **3** cutting-wheel (of a glass cutter).

ت ر ت و –
ترتوار *tiritwaar, turutwaar* <Fr *trottoir*> /n pl *-aat*/ pavement, sidewalk. - also *tilitwaar, tallitwaar*.

ت ر ج م
ترجم *targim* /vt/ to translate, interpret. *targama fawriyya* simultaneous translation. - vn *targama*; ava *mitargim*.
ترجمة *targama* /n/ **1** /pl *-aat*/ translation. **2** /pl *taraagim*/ biography.
مترجم *mutargim* /n */ translator.
ترجمان *turgumaan* /n pl *-aat, taragma*/ dragoman, authorized tourist guide.
اترّجم *ʕittargim* /vi/ to be translated. - iva *mittargim*.

ت ر خ see also ء ر خ
ترّخ *tarrax* /vt/ **1** to put a date on. *ʕana lli tarraxt il-muzakkira* I'm the one who dated the memo. **2** to spin (a yarn), tell a tale. *qaaʕid yitarrax kalaam wi-yquul ʕibn-i ʕamal wi-bn-i sawwa* sitting spinning yarns and saying 'My son did this, my son did that.' - vn *tatriix*; ava *mitarrax*.

ت ر د see م ت ر د: *matrid*

ت ر ر
ترّ *tirr, tirri* /interj/ sound used to encourage cattle to come to drink.

ت ر ز ی
ترزی *tarzi* <P *darzî*> /n pl *-yya*/ (men's) tailor, (ladies') good-quality dressmaker. *miqaṣṣ*[i] *tarzi* tailor's scissors.

ت ر س [1]
ترس *tirs* /n pl *turuus, ṭiruus*/ **1** cog-wheel, gear-wheel, (loosely also) any small wheel or wheel-like object. *tirs*[i] *wallaaʕa* striking-wheel of a lighter. *tirs*[a] *ʕagala* bicycle sprocket. *sanduuq it-tiruus* gear-box. **2**↑ shield.
ترسة *tirsa*[1]: *makaroona tirsa* pasta in the shape of small cog-wheels.
ترّاس *tarraas*[1] /n pl *tarraasa*/ *[rur]* maker of wooden gears for a *saqya*.
ترّس *tarras* /vi/ to be thrown out of gear (of cog-wheels). - also *ḍarras*. - vn *tatriis*; ava *mitarras*.

ت ر س [2]
ترس *taras*[1] *(i)* **1** /vt/ to insert by force, wedge, jam (s.th. into s.th.). *tarast*[i] *ʕiid-i fil-xurm* I forced my hand into the hole. **2** /vi/ to jam, become jammed or wedged. *ʕil-baab taras fi-ṣbaaʕ-u* the door closed on his finger. ‖*muxx-u taaris fi-baʕḍ-u* he has an unreceptive mind, he is inflexible. - vn *tarasaan, tars*; ava *taaris*; pva *matruus*.
متراس *mitraas* <P *matars*> /n pl *matariis*/ **1** wooden wedge used to keep a door closed. **2a** blockhead, dolt. **2b** strong, brawny man. – *matariis* /pl n/ **3** barricades.
اترّس *ʕittaras* /vi/ to be jammed, be inserted by force. *ʕiid-u ttarasit fid-durg* his hand got caught in the drawer. - iva *mittiris*.

ت ر س [3]
ترس *tars* /n/ stern (of a ship or boat).
ترسخانة *tarsaxaana* <T *tersâḫâne*> /n pl *-aat/ [obsol]* dockyard.

(ت ر س) [4]
ترسا *tirsa*[2] /n pl *-aat/* sea-turtle.
ترس *taras*[2] /n pl *-aat/ [rur]* mature kid.
ترس *taras*[3] <T *teres*> /n pl *-aat/ [abus]* pimp.
ترّسيّة *tarrasiyya* /n pl *-aat, taraasi/* ornate donkey-saddle with stirrups and stuffed pommel.
ترّاس *ʿtarraas*[2] /n pl *tarraasa/* driver of pack animals.

ت ر س [5] see و ر س : *turaas*

ت ر س ا ن
ترسانة *tirsaana, tarsaana* <T *tersane*> /n pl *-aat/* **1** dockyard, shipyard. **2** arsenal, cache of arms. ‖*naadi t-tirsaana* one of the top Egyptian football teams.

ت ر س ك ل
تروسكل *tirusikl* <Fr *tricycle*> /n pl *-aat/* tricycle-carrier, tricycle-cart.

ت ر س و
ترسو *tirsu* <It *terzo*> /n/ third class. *mitr*[i] *tirsu* maitre d'hotel, third class. ‖*gumhuur it-tirsu* the front row audience (in a cinema), the people in the cheap seats.

ت ر س ى ن
تراسينة *tarasiina* <It *terrazzino*> /n pl *-aat/ [obsol]* **1** terrace. **2** balcony.

ت ر ع
ترعة *tirʕa* /n pl *tiraʕ/* medium-sized irrigation canal (larger than the *ʿanaaya*). *tirʕit ṣarf* discharge canal. *tirʕit ʃiraad* feeder canal, supply canal.

ت ر ف س
ترفس *tarfas (a) [abus]* **1** /vi/ to become stout or fat. **2** /vt/ to cause to become stout or fat. *ʃil-mawadd in-nifawiyya tarfasit-ha* the starchy substances made her fat. - vn *tarfasa*; ava/pva *mitarfas*.
اترّفس *ʃittarfas* /vi/ to be made stout or fat. - iva *mittarfas*.

ت ر ك [1]
ترك *tarak (u)* /vt/ **1** to leave. *ʃutruk-u lamma yinfaf* leave it till it dries. *ḫaaga matruuka l-taqdiir-i* some thing left to my discretion. **2** to bequeath, leave by will. *ʃabuu tarak-lu fluus kitiir* his father left him a lot of money. **3** to neglect, disregard (especially religious obligations). *ga-lak il-moot ya taarik iṣ-ṣala [prov]* (death has come to you, you who neglect the Prayers) ≈ your sins have caught up with you (said of one suffering from his own misdeeds). — /vi/ **4** to withdraw, lose interest, become dispassionate. *kaan bi-yḥibb id-dinya w-baʕdeen tarak wi-zihid* he used to love life but then he renounced everything and withdrew from society. - vn *tark*; ava *taarik*; pva *matruuk*.
متروكات *matrukaat* /pl n/ cast-off or used articles. *ʕandi ʕamiiṣ bunni min matrukaat gidd-i* I have a brown shirt left by my grandfather.
تركة *tirka* /n pl *tarikaat/* legacy, bequest. *ḍariibit tarikaat* death-duty, inheritance tax. ‖*hiyya tirkit ʃabuu-k* do you imagine its yours by exclusive right?
اتّرك *ʃittarak* /vi/ passive of *tarak*. - iva *mittirik*.
انترك *ʃintarak* = *ʃittarak*. - iva *mintirik*.

ت ر ك [2]
ترك *tark* /coll n/ panels of highly coloured decorative appliqué work, used for the *ṣiwaan* (see Pl.H).

ت ر ك [3]
تركى *turki* **1** /adj */ Turkish. ‖*zeet turki* Turkey red oil (a sulphated castor oil used in leather manufacture). — /n/ **2** /pl *ʃatraak, tarakwa, turk/* a Turk. **3** /no pl/ the Turkish language. ‖*bi-yitkallim turki* he's talking double-Dutch.
تركيا *turkiyya, turkiya* /prop n/ Turkey.

ت ر ك و -
تركواز *turkuwaaz, tirkuwaaz, turukwaaz, tirikwaaz* <Fr> /n/ turquoise.

ت ر ك و ه
تريكو *tirikooh* <Fr *tricot*> /n/ knitting. *jakkita trikooh* a knitted jacket. *bi-tḥibb*[i] *tiftaxal tirikooh* she enjoys knitting.

(ت ر ل ل)
ترلّ *tirill* /n pl *-aat/* oaf, dolt.
ترول *turull* (also *turulli*) <Engl> /n pl *turulliyaat/* **1** trolley. **2** trolleybus.
ترلّه *tirilla* <Engl>: *ʕarabiyya(at) tirilla* trailer truck(s).

ت ر ل ل -
ترللّى *taralalli* <T *terelelli*> /adj invar/ cuckoo, dotty, screwy.

ت ر ل م
ترلم *taralam* onomatopoeia for the sound of music ≈ tra-la-la. - also *ţaralam*.

ت ر ل ى
تورلى *turli* <T *türlü*> /n/ dish of mixed vegetables. - also *tulli, ţurli*.

ت ر ل ى –
ترليون *tirilyoon* <Engl> /n/ trillion, (loosely also) infinite number.

ت ر م [1]
ترم *taram (u)* /vt/ **1** to knock out (teeth). **2** to knock out the teeth of (s.o.). - vn *tarm, taramaan*; ava *taarim*; pva *matruum*.
ترمة *tarma* /fem adj/ missing (of teeth).
أترم *ʕatram* /adj, fem *tarma*, pl *turm*/ having missing teeth.
اتّرم *ʕittaram* /vi/ **1** to be knocked out (of teeth). **2** to have one's teeth knocked out. - iva *mittirim*.
انترم *ʕintaram* = *ʕittaram*. - iva *mintirim*.
ترّم *tarram* /vt/ **1** to knock out (teeth). **2** to dent the cutting edge of (a saw, file, rasp etc.). - ava/pva *mitarram*.
اتّرّم *ʕittarram* /vi/ **1** to be knocked out or badly decayed (of teeth). **2** to be badly dented in several places (of a cutting edge). - iva *mittarram*.

ت ر م [2]
ترم *tirm* <Engl> /n/ *[acad]* school or university term. *nizaam it-tirmeen* system by which the academic year is divided into two terms, each with its own examinations.

ت ر م ا ى see – ت ر م م : *turmaay*

(ت ر م ب)
ترمبة *turumba*[1] <It *tromba*> /n pl *-aat*/ pump. ‖ *turumba kawitf* rubber drain-plunger. - *turumbit baab* hydraulic door-operating device. - also *ţurumba, ţulumba*.
ترمبة *turumba*[2] <It *tromba*> /n pl *-aat*/ trumpet.

ت ر م ب – [1]
ترمبيطة *turumbeeţa* <T *trampete*> /n pl *-aat*/ side drum. - also *ţurumbeeţa*.
ترمبيطجى *turumbeţgi* /n pl *-yya*/ side drummer. - also *ţurumbeţgi*.

(ت ر م ب –) [2]
ترمبون *taramboon* <perh Fr> /n pl *-aat*/ trombone.

ترمبولين *tarambuliin* <prob Engl> /n pl *-aat*/ trampoline.

ت ر م ب – [3] see – ت ر م : *turumbiil*

ت ر م س [1]
ترمس *tirmis* /coll n/ Egyptian lupin (Lupinus termis), the seeds of which are commonly sold in the streets as a snack.
ترمسة *tirmisa* /n pl *-aat*/ **1** /unit n/ a lupin seed. **2** *[plumb]* plug cock. **3** key passage (of a lock). – /no pl/ **4** gland which supposedly forms a small lump in a boy's chest when he reaches puberty. *ţilʕit-lu t-tirmisa* he reached puberty.

ت ر م س [2]
ترمس *turmus* <Engl trade name> /n pl *taraamis*/ vacuum flask.

ت ر م س –
ترموستات *tirmustaat* <Engl> /n pl *-aat*/ thermostat.

(ت ر م م –)
ترمّاى *turummaay* (also *ţurmaay, turumwaay*) <Engl> /n pl *-aat*/ **1** tramway (system), streetcar (system). *ʕif-faariʕ illi fii t-turummaay* the street with the tramlines in it. **2** tram, streetcar. *xabaţ-u t-turummaay* he was knocked over by a tram. **3** motor-powered barge. **4** metal bell on the end of the drone pipe of the *ʕarγuul*.
ترومتر *tirmumitr* <Fr> /n pl *-aat*/ thermometer.

ت ر م و – see – ت ر م م : *turumwaay*

ت ر ن ا ق
ترناق *tirnaaq* <T *tırnak*> /n/ *[naut]* fluke (of an anchor).

ت ر ن ت
ترنتو *tirantu* <It *tirante*> /n/ *[obsol]* loop of leather on the heel of a shoe used to pull it on.

ت ر ن ج
ترنج *turung* /coll n/ *[bot]* Adam's apple(s) (Citrus medica var. cedrata). - also *ʕutrung*.
ترنجة *turunga* /n/ **1** /unit n, pl *-aat*/ an Adam's apple. **2** /no pl/ frieze design used in tent appliqué work (see Pl.H, 27).
ترنجاية *turungaaya* = *turunga*.

(ت ر ن ج -)
ترنجان *turungaan* <P *turungân*> /n/ lemon balm (Melissa officinalis).
ترنجيله *turungeela* /n/ a game played with marbles, in which the target marbles are placed in the shape of a triangle.

ت ر ن ز -
ترنزستور *taranzistur* <Engl> /n pl *-aat*/ transistor. ‖*raagil taranzistur [derog]* very small man, pip-squeak.

ت ر ن س
ترانس *tarans* <Engl> /n pl *-aat*/ *[elec]* transformer.

ت ر ن س - [1]
تارنيستان *tarnistaan* <Engl *turn astern*> *[naut]* order given to boat's engineer to move astern.

ت ر ن س - [2]
ترانسيت *taransiit* <prob Fr> /n/ **1** transit. **2** transit area (in an airport).

ت ر ن ش
ترانش *taranf* <Fr *tranche*> /n pl *-aat, -aat*/ slice. ‖*sikkiinit taranf* carving knife.

ت ر ن ق see ت ر ن ا ق : *tirnaaq*

ت ر ن ك
ترنك *tarank* or *tarank* <Engl> /n pl *-aat*/ **1** trunk telephone system. **2** trunk telephone call, long distance call.

ت ر ن ه -
تارنيهيت *tarnihiit* <Engl *turn ahead*> *[naut]* order given to boat's engineer to move ahead.

ت ر ن ى ش
ترنيشة *tarneefa* /n pl *-aat*/ handle of a tap or faucet.

ت ر ه
ترّهة *turraha↑* /n pl *-aat*/ falsehood.

ت ر و س
تروس *tarwis* /vi/ to make a surrounding wall, fence etc., make a frame (around s.th.), for protection. *tarwis ɛala l-ʕimḍa ɛafaan tibaan* draw a line round the signature so that it stands out. - vn *tarwasa*; ava/pva *mitarwis*.
ترويسة *tarwiisa* /n pl *tarawiis, tarwisaat*/ **1** surrounding wall, fence etc. **2** flourish or line drawn round a signature to make it stand out.
اتّروس *ʕittarwis* /vi/ (impersonal) passive of *tarwis*. *mittarwis ɛalee* well-guarded. - iva *mittarwis*.

ت ر ى س
تريس *tiriis* <Gr *treis*> /n pl *-aat*/ three (in cards).

ت ر ى س -
تريسبس *tiraysibs* <Engl> /n/ *[anat]* triceps. - also *tiraay*.

ت ر ى ق [1]
تريقة *taryaqa* /n/ mockery.
اتّريق *ʕittaryaq* /vi/ to make a mock, poke fun. *ʕinta b-tittaryaq ɛalayya* are you making fun of me? - vn *taryaqa*; ava *mittaryaq*.

ت ر ى ق [2]
تريا ق *tiryaaq* /n/ antidote, theriac.

ت ر ى ن ت
ترينتو *taryantu* /n/ *[Chr]* triangle (musical instrument) used to accompany chants and hymns in the Coptic church.

ت ز ا ن
تزانة *tazaana* /n/ whitewood planking. - also *latazaana, laṭazaana*.

ت ز ج
تزجة *tazga* <T *tezgâh* from P> /n pl *tizag*/ work bench. *mangala tazga* vice.

ت ز ك ى
تذاكيّة *tazakiyya* <Gr *theotokia*> /n pl *-aat*/ *[Chr]* hymn to the Virgin Mary.

ت ز ل ك
تزلك *tuzluk* <T *tozluk*> /n pl *tazaalik*/ **1** (leather) leggings or gaiters. *gazma b-tuzluk* a pair of high boots. **2** section of appliquéed sailcloth used as a partition in a *ṣiwaan*.

(ت س ت)
توست *tust* <Engl> /n/ **1** toast. **2** *(ɛeef) tust* sandwich-loaf, rectangular loaf of bread.
تست *tist* /n pl *-aat*/ human pyramid (in acrobatics).

ت س ع
تسع *tusɛ* /n pl *ʕitsaaɛ*/ one ninth, ninth part.

تسعة *tisʕa* /num: in absol state, in apposition, or w foll n sing in contexts of ordering and itemizing; pl *-aat*/ nine. *ʃis-saaʕa tisʕa* nine o'clock. *xumsumiyya w-tisʕa* five hundred and nine. *ʃil-ʕiyaal tisʕa* the children are nine (in number). *ʕiyal-ha t-tisʕa* her nine children. *tisʕa saar* nine piastres. *haat tisʕa biira* bring nine beers! ‖*yoom tisʕa min ʃahr*^{i} *tisʕa* the ninth of September. *-kull-i-na wlaad tisʕa* (we are all born after nine months' pregnancy) ≈ we are all equal.

¶ *tisʕaat (tisʕaat)* /adv/ in nines, nine at a time.

تسع *tisaʕ* /num: in constr w foll n pl; usu *tisaʕt* when followed by n pl ordinarily w initial hamza/ nine. *tisaʕ banaat* nine girls. *tisaʕt ufhur* nine months. *tisaʕt alaaf* nine thousand.

تاسوعة *tasuuʕa* /n/ ninth day of the month of Muharram.

تاسع *taasiʕ* /adj/ ninth. ‖*fit-taasiʕ* in the ninth (month of pregnancy).

تسعتاشر، تسعة عشر *tisaʕtaafar* **1** /num pl *-aat*/ nineteen. **2** *ʃit-tisaʕtaafar* /adj invar/ the nineteenth.

تسعين *tisʕiin* **1** /num pl *-aat*/ ninety. **2** *ʃit-tisʕiin* /adj invar/ the ninetieth.

تسعمائة *tusʕumiyya* **1** /n pl *-aat*/ nine hundred. **2** *ʃit-tusʕumiyya* /adj invar/ the nine-hundredth.

تسّع *tassaʕ* /vi/ to reach the ninth day (after a birth, marriage or death). -ava *mitassaʕ*.

ت ش ش

تشة *tiʃʃa* <Copt> /adj invar/ fat, corpulent, plump.

ت ش ى ك

تشيكى *tiʃiiki* **1** /adj/ Czech. **2** /n */ a Czech. **3** /n no pl/ the Czech language.

ت ع ا ل

تعال *taʕaala*^{1} /imper, fem *taʕaali*, pl *taʕaalu*/ come! come on! *taʕaala bukra* come tomorrow! *taʕaala niskar* let's get drunk!

ت ع ب ^{1}

تعب *tiʕib (a)* /vi/ **1** to become tired, become worn out. *ʃana tiʕibt*^{i} *w-laazim ʃanaam* I'm exhausted and must sleep. *ʃil-mawatiir bitaaʕit it-taksiyaat bi-titʕab bi-surʕa* taxi engines wear out quickly. **2** to put oneself to trouble, put oneself to inconvenience. *yaama tʕibt*^{i} *l-ʂalḥ-u w-dilwaqti b-yinkir* how often I've put myself out on his behalf and now he denies it! **3** to suffer discomfort. *ma-tʕibt*^{i}*-ʃ ʠawi fil-wilaada* I didn't suffer much pain when I had the baby. -vn *taʕab*; ava *taʕbaan*.

تعب *taʕab*^{1} *(i)* /vt/ **1** to tire, wear out. *ʃif-fuxl*^{i} *taʕab-ni* the work tired me out. **2** to put to trouble or inconvenience. *ʃamal-i m-akun-f*^{i} *taʕabt-ak* I hope I haven't been any trouble to you. **3** to cause discomfort or suffering. *ʃif-fiiʃa b-titʕib is-sidr* the narghile causes chest pains. -vn *taʕab, taʕabaan*; ava *taaʕib*.

تعب *taʕab*^{2} /n/ inconvenience. *ma-fii-ʃ taʕab* it's no trouble at all. ‖*taʕab-ak raaḥa* (the inconvenience you cause is ease) ≈ it's a pleasure.

أتعاب *ʃatʕaab* /pl n/ fees.

تعبان *taʕbaan* /adj */ **1** tired, worn out. *ʃana taʕbaan min sahrit ʃimbaariḥ* I'm tired from last night's party. ‖*ʃaxʂiyyit-u taʕbaana* he has a weak personality. **2** sick, ill. *taʕbaan ʃiwayya* not very well. ‖*muxx-u taʕbaan* he's a bit crazy. **3** poor, wretched, pitiable. *muwaẓẓaf taʕbaan wi-ʂalbaan zayy*^{i} *ḥalaat-i* a poor, unfortunate civil servant like me. **4** of poor quality. *xaṭṭaaṭ taʕbaan* a bad calligrapher. *ʃarḍ*^{i} *taʕbaana* infertile land. *film*^{i} *taʕbaan ʠawi* a lousy film.

أتعب *ʃatʕab*^{1} /el/ more/most tired.

متاعب *mataaʕib* /pl n/ troubles, burdens, worries, difficulties.

أتعب *ʃatʕab*$^{2\uparrow}$ /vt/ to tire. -ava *mutʕib*.

متعب *mutʕib* /adj */ tiring, tiresome. *ʃis-sillim huwwa lli mutʕib* it's the stairs that are tiring. *ya salaam da-nta walad mutʕib giddan* goodness! aren't you a tiresome boy!

استتعب *ʃistatʕab* /vt/ to consider (s.th.) too tiring. -ava/pva *mistatʕab*.

ت ع ب ^{2}

تعبان، ثعبان *tiʕbaan* /n pl *taʕabiin*/ **1** snake. *zayy it-tiʕbaan yuqruṣ wi-yilbad* like a snake, biting and lurking (said of a snake-in-the-grass). *ʃilli ʠaraṣ-u t-tiʕbaan yixaaf mil-ḥabl [prov]* he whom the snake has bitten fears the rope. ‖*tiʕbaan il-baṭn [path]* roundworm. *-raas tiʕbaan* motif in tent appliqúework (see Pl.H, 12). **2** *tiʕbaan il-baḥr* or *samak tiʕbaan* eel.

ت ع ت ع

تعتع *taʕtaʕ* /vt/ **1** to budge, move. **2** to dislocate (a limb). -also *taḥtaḥ*. -vn *taʕtaʕa*; ava/pva *mitaʕtaʕ*.

متعتع *mitaʕtaʕ* /adj/ unsteady on one's feet, tottery.

اتعتع *ʃittaʕtaʕ* /vi/ passive of *taʕtaʕ*. -iva *mittaʕtaʕ*.

ت ع س

تعس *taʕas (i)* /vt/ to make unhappy or miserable. *ʃilli taʕas-u zamaan-u yirkab ʃutubiis* it's an unfortunate man who has to go by (public) bus. -vn *taʕaasa, taʕasaan*; ava *taaʕis*; pva *matʕuus*.

متعوس *matʕuus* /adj pl *mataʕiis*/ unlucky and wretch-

ed, doomed to failure. ‖*ʕil-matɛuus matɛuus wa-law ɛallaqu ɛala raas-u fanuus [prov]* ≈ an unlucky man stays unlucky no matter what chances he gets. - *ʕitlamm il-matɛuus ɛala xaayib ir-raga* the wretched man comes together with the hopeless one (said to abuse an association between two persons). - *ʕil-ɛaruusa lil-ɛariis wig-gary' lil-mataɛiis [prov]* the bride is for the groom but those who have exhausted themselves (preparing the marriage) only have trouble (i.e. involving oneself in what is essentially other people's business only brings problems).

تعيس *taɛiis* /adj pl *tuɛasa*/ miserable.

أتعس *ʕatɛas* /el/ more/most miserable or unhappy. *min ʕatɛas maxaliiq illaah* one of the most wretched of creatures.

انتعس *ʕintaɛas* /vi/ to be made unhappy, wretched or miserable. - iva *mintiɛis*.

ت ع ل ب

تعلب، ثعلب *taɛlab* /n pl *taɛaalib*/ fox.

تعلبة، ثعلبة *taɛlaba* /n/ **1** foxiness, slyness, cunning. **2** *[path]* Alopecia areata, fox-evil (a nervous disorder causing small round patches of baldness).

اتّعلب *ʕittaɛlab* /vi/ **1** to become foxy, cunning or sly. **2** to behave foxily, cunningly or slyly. - ava *mittaɛlab*.

ت ف

تفة *tifa* /n pl *-waat*/ ichneumon. - also *tifaawa, tifiwwa*.

ت ف ا و

تفاوة *tifaawa* /n pl *-aat*/ ichneumon. - also *tifa, tifiwwa*.

ت ف ت

تفته *tifta* /n/ red powder used for colouring food. *ʕaḥmar tifta* pale red.

ت ف ت ا ه

تفتاه *taftaah* <Fr *taffetas*> /n/ taffeta.

ت ف ت ف

تفتف *taftif* /vi/ to spit or splutter while talking. - vn *taftafa*; ava *mitaftif*.

تفتوفة *taftuufa* /n pl *tafatiif*/ **1** *[slang]* cigarette. **2** a small piece. *taftuufit laḥma* a small piece of meat.

ت ف ح

تفّاح *tuffaaḥ, tiffaaḥ* /coll n/ apple(s).

تفّاحة *tuffaaḥa, tiffaaḥa* /unit n, pl *-aat*/ an apple. *tiffaaḥit ʕaadam* the Adam's apple. ‖*tiffaaḥit ṣaari [naut]* wooden cap on the top of a mast.

تفّاحي *tuffaaḥi, tiffaaḥi* /adj/ apple-like. *xadd-a-ha ʕaḥmar tuffaaḥi* she has apple-red cheeks. ‖*zatuun tuffaaḥi* variety of large green olive for pickling.

ت ف خ

تفخ *taffax* **1** /vt/ to cause to swell. *ɛenee kaanit mitaffaxa min kutr il-ɛiyaaṭ* his eyes were swollen from much weeping. **2** /vi/ to become swollen. - vn *tafiix*; ava/pva *mitaffax*.

اتّفخ *ʕittaffax* /vi/ to be made to swell. - iva *mittiffix*.

ت ف ش

تفشجي *tufaʃgi* <T *tüfekçi*> /n pl *-yya*/ armourer (in the police and the army). - also *tufakʃi*.

ت ف ف

تفّ *taff (i)* /vt/ to spit. *fi-blaad barra ḥatta t-taff' b-filuus* abroad it costs you money even to spit. ‖*tiff' f-wiff-i law* you may spit in my face if (such-and-such an unlikely thing happens), as in *ʕibqa tiff' f-wiff-i law ʕana ɣalṭaan* ≈ I'll eat my hat if I'm wrong! - *tiff' min buqq-ak* ≈ don't say such things (said to one who blasphemes or mentions something ill-omened). - *taffiin fi-buqq' baɛḍ* (it's as if) they have conspired together. - *ʕilli ytiff' taffa ma-yilḥas-haa-ʃ [prov]* (one does not lick what one has spat) what has been cast away should be left alone, what's done is done. - vn *taff, tafafaan*; ava *taafif*; pva *matfuuf*.

تفّة *taffa* /n pl *-aat*/ **1** instance noun of *taff*. **2** gob of spittle.

تفاف *tifaaf* /n/ spittle.

تفافة *tifaafa* /n/ spittle.

متفّة *mitaffa* /n pl *-aat*/ spittoon.

ت ف ك

تفكجي *tufakʃi* <T *tüfekçi*> /n pl *-yya*/ armourer (in the police and the army). - also *tufaʃgi*.

توفكخانة *tufakxaana* <T *tüfekḫâne*> /n pl *-aat*/ *[obsol]* gun factory.

ت ف ل

تفل، ثفل *tifl* /n/ fibrous vegetable sediment, dregs. *tifl ʃ-ʃaay* tea dregs.

تفّل، ثفّل *taffil* /vi/ to become fibrous. *ʕil-lift' ʃaax wi-taffil* the turnips became old and woody. - ava *mitaffil*.

ت ف ه

تفاهة *tafaaha* /n pl *-aat*/ triviality.

تافه *taafih* /adj/ trivial, insignificant.

أتفه *ʕatfah* /el/ more/most trivial or insignificant.

ت ف و see ت ف and ت ف ا و and ت ف و و
tifa, tifaawa, tifiwwa

ت ف و ه
تفوه *tifuuh, tifuww* onomatopoeia for the sound of spitting, indicating disgust. *tifuuh (ɛaleek)* ≈ how disgusting (you are)! *ɛeen-i fii wi-tfuww[a] ɛalee [prov]* I have my eye on it and how disgusting it is! (said in running down what one secretly desires). -also *ʕitfuuh, ʕitfuww*.

ت ف و و
تفّوة *tifiwwa* /n pl *-aat*/ ichneumon. -also *tifaawa, tifa*.

ت ق ا و see [2] ت ق ى: *taqaawi*

ت ق ب
ثقب، تقب *taqaḇ (i)* /vt/ to drill or bore. -vn *taqb, taqabaan*; ava *taaqib*; pva *matquub*.
ثقب، تقب *tuqb, suqb↑* /n pl *tuquub, suquub↑*/ hole.
مثقاب، متقاب *mitqaab* /n pl *mataqiib*/ **1** any device for drilling or boring. **2** skirt chaser.
اتّقب *ʕittaqab* /vi/ to be drilled or bored. -iva *mittiqib*.

ت ق ل
ثقل، تقل *tiqil (a)* /vi/ **1** to become heavy. *bi-yʃarrabu l-farxa mayya ktiir ɛaʃaan titqal fil-wazn* they give the chicken a lot of water to drink so it will weigh more. ‖ *ʕil-ħarr[i] xalla dmaaɣ-i titqal* the heat made my head feel muzzy. *quddaam il-mudiir lisaan-i b-yitqal* I get tongue-tied in front of the boss. **2** to become burdensome, become difficult. *ma-tsib-ʃ il-waagib yitqal ɛaleek* don't let the homework get on top of you. *ħasseet ʕinn[i] samaɛ-i tiqil* I felt hard of hearing. **3** to act reserved, play it cool. *balaaʃ tuql[i] baqa* enough of this coyness! *da b-yitqal ɛalayya* he plays hard-to-get with me. *ʕit-tuql[i] ʂanɛa* playing hard-to-get is an art. ‖ *ʕitqal ɛar-ruzz (lamma yistiwi)* ≈ have patience! take it easy! -vn *tuql, taqalaan*; ava *taqlaan*.
ثقل، تقل *tuql* /n/ **1** weight, heaviness. *naxx[i] miṅ it-tuql* it gave way under the weight. ‖ *lissa t-tuql[i] waɾa* the best is still to come. **2** weight, object used in weighing. **3** *[naut]* hand lead.
أثقال *ʕasqaal↑* /pl n/ weights for weight-lifting. *ħaml il-ʕasqaal* weight-lifting.
ثقل، تقل *taqal* /n/ weight, object used for weighing down. *taqal lif-ʃaduuf* counterpoise for the shadoof.
ثقلة تقلة *taqala* = *taqal*.
ثقيل، تقيل *tiqiil* /adj pl *tuqaal*/ **1** heavy, weighty. *maɛmuul min in-naħaas it-tiqiil* made of heavy copper. *tiqiil wi-xafiif it-tiqiil* heavyweight and light-heavyweight (in boxing and wrestling). ‖ *geeb-u tqiil* he's well-off. -*tiqiil il-lisaan* slow and indistinct of speech. -*ʕir-raagil da xebt-u tqiila* that man is a total flop. -*ʕiid-u tiqiila* he is clumsy. **2** thick, heavy. *ʃaay tiqiil* strong tea. *ʃarbaat tiqiila* syrup which is (too) highly concentrated. *misaqqaɛa tqiila* heavy (greasy) moussaka. ‖ *ʃaxx it-tiqiila* to defecate. **3** difficult, burdensome. *ʕil-waagib da tqiil ɛalayya* that homework is difficult for me. *tibqa tqiila minni law ţalabt[i] minha l-xidma di* it would be expecting too much if I were to ask her for such a favour. ‖ *tiqiil (id-damm)* dour, boorish, unpleasant. -*tiqiil is-samɛ* hard of hearing. **4a** coy. **4b** phlegmatic, cool. **5** /also pl *taqaayil*/ prominent, notable (of persons). *luṣuuṣ taqaayil* big-time thieves.
أثقل، أتقل *ʕatqal* /el/ more/most heavy, more/most burdensome. ‖ *ʕatqal mil-hamm[a] ɛal-qalb* more than can be tolerated.
ثقّال، تقّال *tuqqaal* /n pl *-aat*/ counterpoise (notably a sliding counterpoise on a steelyard).
ثقّالة، تقّالة *tuqqaala* /n pl *-aat*/ weight, object used for weighing down. *tuqqaalit waraq* paperweight. *tuqqaalit is-saaɛa* clockweight.
ثقيلة، تقيلة *tuqqeela* /n pl *-aat*/ weight, object used for weighing down. *tuqqeela lil-waraq* paperweight.
مثقال، متقال *mitqaal* /n pl *mataqiil*/ unit of weight equal to twenty-four carats or 72.223 English grains.
ثقّل، تقّل *taqqal, taqqil* /vt/ **1** to make heavy, make burdensome. *ma-ttaqqil-ʃ il-ħiml[a] ɛal-ɛarabiyya* don't put too heavy a load on the car! ‖ *taqqil damm-u* he behaved in a deliberately boorish and unpleasant way. -*taqqal rigl-ak* (1) don't walk so fast. (2) be patient. **2** to size (e.g., textiles). — /vi/ **3** to lean heavily. *ma-ttaqqil-ʃ[i] ɛal-qalam* don't press (too) hard on the pencil! ‖ *ʕiwɛa ʕakuun taqqilt[a] ɛaleek* I hope I've not been too much trouble. **4** to go to excess (especially in drinking alcohol). *taqqilt[i] fiʃ-ʃurb* I had too much (alcohol) to drink. *taqqilt imbaariħ* I had a heavy night last night. *taqqilt[i] fin-noom* I slept too long. **5** to wear warm clothes. *laazim titaqqil lamma tuxrug* you must put on something warm when you go out. -vn *tatqiil*; ava/pva *mitaqqal, mitaqqil*.
متقّلات، مثقّلات *mitaqqalaat* /pl n/ heavy goods.
تاقل *taaqil* /vt/ to set an equivalent in weight. *law taqil-ni bid-dahab* even if he pays me my weight in gold (I won't do what he wants). -vn *mitaqla*; ava/pva *mitaaqil*.
اتاقل *ʕittaaqil* /vi/ **1** to be equalled in weight. ‖ *ʕinta b-tittaaqil bi-ɛaʃar riggaala* you're the equal of ten men. **2** to play hard-to-get. -ava/iva *mittaaqil*.

استتقل *ʔistatqal, ʔistatqil* **1** /vt/ to consider (too) heavy or weighty. ‖ *ʔana b-astatqil damm-u* I consider him boorish. **2** /vi/ to behave in a brusque or high-handed manner. - vn *ʔistitqaal*; ava/pva *mistatqal, mistatqil*.

ت ق ن

تقن *taqan (i)* /vt/ **1** to do (s.th.) well. *laazim titqin-li l-badla ɛal-ʔaaxir* you must make the suit a perfect fit. **2** /imperf only/ to be an expert in. *bi-yitqin il-ɛarabi* he knows Arabic well. - vn *taqn, taqanaan*; ava *taaqin*; pva *matquun*.

تقن *tiqin* /adj */ meticulous (usually in manual work). *ʔil-fallaaḥ it-tiqin illi faddaan-u ma-yirmii-ʃ ʔaqall[i] min ɛaʃar ʔaraadib valla* the meticulous peasant is he whose land yields not less than ten ardebs of wheat per feddan.

أتقن *ʔatqan, ʔatqan↑ = taqan*. - vn *ʔitqaan↑*; ava *mutqin*; pva *mutqan*.

إتقان *ʔitqaan↑* /n/ exactitude, precision, accuracy.

اتّقن *ʔittaqan* /vi/ to become or be made exact, precise, or perfect. - vn *ʔittiqaan*; iva *mittiqin*.

[1] ت ق و see [1] ث ق ى : *taqwa*

[2] ت ق و see [2] ت ق ى : *taqaawi*

[1] ت ق ى see also [1] و ق ى

تقى *taqi* /adj pl *ʔatqiya, ʔatqiyya*/ pious, God-fearing.

تقوى *taqwa* /n/ devoutness, piety.

أتقى *ʔatqa* /el/ more/most pious or God-fearing.

اتّقى *ʔittaqa* /vt/ **1** to fear (God). *ʔittiqi llaah fi-ṣiḥḥit-ak* value your health (as a gift of God)! **2** to be wary of. *ʔittiqu daɛwit il-mazluum [prov]* beware of (bringing upon yourself) the curse of the oppressed! *ʔittiqi ʃarra man ʔaḥsanta ʔilee [prov]* beware of the evil (i.e. ingratitude) of those to whom you have done good! - ava *mittiqi*.

[2] ت ق ى

تقاوى *taqaawi* **1** /pl n/ seeds (for sowing). **2** /n/ *[deris* diminutive version (of s.th.). *taqaawi raagil* a pint-sized man.

تقّى *taqqa* /vt/ to sow (land). - vn *tatqiyya*; ava/pva *mitaqqi*.

اتّقّى *ʔittaqqa* /vi/ to be sown (of land). - iva *mittaqqi*.

ت ك ا ت

تكات *tikaat* /n/ mounting of a scoop on a water-wheel.

ت ك ت

تيكيت *tikit* <Engl *ticket*> **1** tag, label. *nisi yiḥuṭṭ it-tikit ɛaʃ-ʃanṭa* he forgot to put the label on the bag. **2** collection slip, ticket. *ʔit-tikit bitaaɛ it-tanturleeh* the ticket for the dry-cleaning.

[1] ت ك ت ك

تكتك *taktik[1]* /vi/ to tick, go tick-tock. *qalb-i bi-ytaktik* my heart is beating hard. ‖ *taktik ɛat-tilifoon* to jiggle the telephone to get a connection. - vn *taktaka*; ava *mitaktik*.

اتّكتك *ʔittaktik[1]* /vi/ to be made to tick or click. *sinaan-i ttaktikit mil-bard* my teeth are chattering with the cold. - iva *mittaktik*.

[2] ت ك ت ك

تكتيك *taktiik* <Fr *tactique*> /n/ **1** tactics. **2** /pl *-aat*/ tactic, scheme, strategem.

تكتيكى *taktiiki* /adj */ tactical.

تكتك *taktik[2]* /vt/ to plan (s.th.) carefully. - vn *taktaka*; ava/pva *mitaktik*.

متكتك *mitaktik* /adj */ sharp, on-the-ball.

اتّكتك *ʔittaktik[2]* /vi/ to be planned carefully. - iva *mittaktik*.

[3] ت ك ت ك

تكاتيك *takatiik* /pl n/ consequences. *gat-lu ḥumma w-raaḥ fi-takatik-ha* he had fever and died of it.

ت ك س

تاكسى *taks* or *taksi* <perh Engl> /n pl *taksaat, taksiyyaat, tukúsa*/ taxi. *taksi bin-nafar* a taxi which plies a fixed route, each passenger paying his own fare.

[1] ت ك ك

تكّ *takk[1] (i)* /vi/ to make a slight sound, creak, click. *ʔil-balaaṭa takkit taḥt[i] riglay-ya* the tile made a slight sound under my feet. *ʔil-maktab takk[i] taḥt it-tuql* the desk creaked under the weight. - vn *takk, takakaan*; ava *taakik*.

تكّة *takka[1]* /inst n, pl *-aat*/ **1** a slight sound, a creak, a click. **2** a little bit. **3** twitch, tic. *takka ɛaṣabiyya* a nervous tic.

[2] ت ك ك

تكّة *tikka[1]* /n pl *-aat, tikak*/ draw-string. - also *dikka*.

تكّك *takkik* /vt/ to put a drawstring in (e.g., a garment). - vn *tatkiik*; ava/pva *mitakkik*.

اتّكّك *ʔittakkik* /vi/ to have a draw-string inserted (of, e.g., a garment). - iva *mittakkik*.

³ (ت ك ك)
تكّ *takk²* <T *tek*> /n/ *[mus]* weak beat.
تكّة *takka²: takkit ħaraara* a plate of heat-resistant material (asbestos) used on a goldsmith's soldering disc.
تكّ *tikk¹* /n/ *[mus]* used only in combination with the name of a note to indicate a rise in pitch of a quarter tone, e.g., *tikk' zirkoola* the note one quarter of a tone higher than D flat (i.e. D half flat).
تكّ *tikk²* <Engl> /n/ teak.
تكّة *tikka²* <It *tacca*> /n pl *-aat/ [print]* nick (on a piece of type).

¹ ت ك ل see ء ك ل : *ʔittaakil*

² ت ك ل see ¹ و ك ل : *tukaal*

ت ك م
تكمة *tukma* /n/ binding strip round a section of appliqué work.

ت ك ن
تكنة *tikna* <T *tekne*> **1** plasterer's mixing trough. **2** hull (of a boat).

ت ك ن ل –
تكنولوجيا *tiknulujya* <prob Engl> /n/ technology.
تكنولوجى *tiknulooji* **1** /adj */ technological. **2** /n */ technologist.

ت ك ى
تكيّة *tikiyya* <cf T *tekye*> /n pl *-aat, takaaya/* **1** *[obsol]* Sufi religious house. **2** *[joc]* free eating-place, a place where anything goes. ‖ *tikiyya min ʕeer bawwaab [prov]* ≈ a free-for-all.
تكّاية *takkaaya* /n pl *-aat/* arm-rest. *takkaayit kanaba* cushion used as an arm-rest on a sofa.
اتّكى *ʔittaka* /vi/ to lean, support oneself. *haat lina ʃilat nittiki ʕaleeha* bring cushions for us to recline on. *ʔil-ʕaguuz kaan maaʃi yittiki ʕala ʕukkaaz* the old man walked supporting himself on a walking-stick. *rizq is-saaʕi lil-mittiki [prov]* the labour of the hard-working enriches the idle. - ava *mittiki*.
اتّكّى *ʔittakka (yittakka)* /vi/ **1** to press, exert pressure. *tittakka ʕal-xaʃab yizayyaq* if you press on the wood, it will creak. *ʔil-mudarris ʕallim-ni zzaay ʔattakka gaamid ʕad-dibriyaaj* the instructor taught me how to press down hard on the clutch. **2** to place emphasis, give concentration. *tinaqqi faṣleen tittakka ʕaleehum kuwayyis wi-txuff il-imtiħaan* choose a couple of chapters and study them thoroughly, then take the exam. - vn *tatkiyya*; ava *mittakki*.

ت ك ى ه
تاكيه *takeeh* <Fr *taquet*> /n pl *-aat/ [auto]* tappet.

ت ل ب
تلب *tilb* /adj */ *[obsol]* well-built, strong (of a person). *gittit-u tilba* he is solidly built.

ت ل ب ى –
تليبيانكو *tilibiyanku* <It *taglio bianco*> /n/ cut of meat consisting of a whole thigh muscle. - also *tiribiyanku*.

ت ل ت
تلت، ثلث *tilt* /n pl *ʔatlaat/* **1** one third, a third part. *tilt' kiilu* a third of a kilo. ‖ *ma-kanit-ʃ' tistagri tquul tilt it-talaata kaam* ≈ she didn't dare utter a word. - *ʔiddaa-ni ʕalʕa tilten-ha moot* ≈ he gave me a beating which half killed me. **2** string of prayer beads of thirty-three beads only (in contrast with one of ninety-nine beads).
تلات، ثلاث *talat* /num: in constr w foll n pl; usu *talatt* when followed by n pl ordinarily w initial hamza/ three. *talat riggaala* three men. *talatt alaaf* three thousand. *kull' talat ħigaara* every three stones. *fit-talatt iyyaam dool* during those three days. ‖ *ʔit-talat waraqaat* the three-card trick. - *ʃuxl it-talat waraqaat* trickery, dishonesty, monkey business.
ثلث *sulus* /n/ a large decorative intertwined style of Arabic calligraphy. ‖ *bis-sulus* definitely, as in *ʔinta ħa-trawwaħ bis-sulus* you will definitely go home.
تلات، ثلاثاء *talaat* (also *yoom talaat*) /n/ (any) Tuesday. *ʔit-talaat* or *yoom it-talaat* Tuesday.
تلاتة، ثلاثة *talaata* /num: in absol state, in apposition, or w foll n sing in contexts of ordering and itemizing; pl *-aat/* three. *miyya w-talaata* one hundred and three. *ʔil-qanuun raqam talaata* law number three. *ʔil-ʕiyaal talaata* the children are three (in number). *ʕiyal-ha t-talaata* her three children. *talaata saar* three piastres. *haat talaata ʔahwa* bring three coffees! *kull' sanateen talaata* every two or three years. ‖ *yoom talaata (min) ʃahr' talaata* the third of March. - *ʔiṭ-ṭalaaq bit-talaata [Isl]* irrevocable divorce. - *talaata bi-llaah il-ʕaẓiim* or *w-allaahi l-ʕaẓiim talaata* three (oaths) 'By Almighty God!' (a very forceful oath).
¶ *talataat (talataat)* /adv/ in threes, three at a time.
ثلاثى *sulaasi* /adj/ **1** triple. ‖ *ħuqna sulasiyya* D.P.T. (diphtheria, pertussis and tetanus) injection.

- *ʔil-ɛaḍala s-sulasiyya [anat]* the triceps. **2** tripartite. **3** *[mus]* three-quarter (time), waltz (tempo). — **4** /n/ trio.

ثالوث *saluus* /n/ triad, trio. *ʔis-saluus il-ʔaqdas [Chr]* the Holy Trinity.

تلاّت *tallaat* /n * and pl *tallaata*/ **1** practitioner of the three-card trick. **2** con man.

تالت، ثالث *taalit* /adj/ third. *ʔit-talta tabta [prov]* the third (time) is decisive.

ثالثا *saalisan* /adv/ thirdly.

متلوت *matluut*↓ = *musallas* 1.

تلتاشر، ثلاثة عشر *talattaaʃar* **1** /num pl *-aat*/ thirteen. **2** *ʔit-talattaaʃar* /adj invar/ the thirteenth.

تلاتين، ثلاثين *talatiin* **1** /num pl *-aat*/ thirty. ‖ *waaḥid wi-talatiin* a card game resembling blackjack. - *ḍarab* (or *ɛamal) waaḥid wi-talatiin [coarse]* to masturbate, wank. **2** *ʔit-talatiin* /adj invar/ the thirtieth.

ثلاثمائة *tultumiyya* **1** /num pl *-aat*/ three hundred. **2** *ʔit-tultumiyya* /adj invar/ the three-hundredth.

تلّت، ثلّث *tallit* /vt/ to do (s.th.) for a third time. *laazim ʔatallit is-sana* I have to repeat the year a third time. *ḥabl*^{i} *mtallit* three-stranded rope. - vn *tatliit*; ava/pva *mitallit*.

تثليث *tasliis* /n/ *[Chr]* doctrine of the Trinity.

تتليت *tatliit* /n/ **1** practice of the three-card trick. **2** conning.

مثلّث *musallas* /adj/ **1** (also *mitallit*↓) triangular. *mabrad mitallit* three-sided file. — /n pl *-aat*/ **2a** triangle. *ḥisaab il-musallasaat* trigonometry. ‖ *liɛb*^{i} *musallasaat [soccer]* three part pass. - *musallas il-massaaḥ* surveyor's cross-staff. **2b** *[mus]* triangle. **2c** third highest pitched string of the *ɛuud*.

اتلّت *ʔittallit* /vi/ **1** to be difficult, or choosy, play hard-to-get. *ʔiz-zibuun bi-yittallit ɛaleena* the customer is being difficult and hard to please. **2** passive of *tallit*. *ʔil-ḥabl*^{i} *da law ittallit ḥa-ykuun tixiin ɛawi* if three thicknesses of this rope are used together it will be too thick. - ava/iva *mittallit*.

اتّالت *ʔittaalit* = *ʔittallit* 1. - ava *mittaalit*.

ت ل ت ل

تلتل *taltil* **1** /vt/ to heap up, pile up. **2** /vi/ to become a pile. *balaawi mtaltila* calamity upon calamity. - vn *taltala*; ava/pva *mitaltil*.

اتّلتل *ʔittaltil* /vi/ to be heaped up, be piled up. *ʔif-fuvl ittaltil ɛala dmaav-i* I was up to my ears in work. - iva *mittaltil*.

ت ل ت و –

تلتوار *tilitwaar* <Fr *trottoir*> /n pl *-aat*/ pavement, sidewalk. - also *tiritwaar, turutwaar, tallitwaar*.

ت ل ج

تلج، ثلج *talg* /n/ **1** ice. - /adjectivally/ *ʔil-mayya talg* the water is ice-cold. **2** snow.

تلاّجة، ثلاّجة *tallaaga* /n pl *-aat*/ refrigerator. *markib tallaaga* refrigerator ship. ‖ *gibna tallaaga* very creamy, freshly-made lightly-salted white cheese.

تلّج، ثلّج *tallig* /vt/ **1** to store (s.th.) on ice. **2** to freeze. — /vi/ **3** to freeze; turn to ice. *talligt*^{i} *mil-bard* I froze with cold. - vn *tatliig*; ava/pva *mitallig*.

اتلّج *ʔittallig* /vi/ to become frozen or very cold, be made to freeze. - ava/iva *mittallig*.

ت ل ح see also ت ن ح

تلح *tiliḥ, tilḥ* /adj */ insensitive, thick-skinned, impervious to hints.

أتلح *ʔatlaḥ* /el/ more/most insensitive, etc.

تلاحة *talaaḥa* /n/ insensitivity, thick-skinnedness, imperviousness to hints.

تلّح *tallaḥ* /vi/ **1** to become blank, dazed or insensitive. **2** to behave in an insensitive or brusque way. - vn *tatliiḥ*; ava *mitallaḥ*.

استتلح *ʔistatlaḥ* **1** /vt/ to consider insensitive or thick-skinned. **2** /vi/ to behave in an insensitive way. - vn *ʔistitlaaḥ*; ava/pva *mistatlaḥ*.

ت ل ح م

تلحم *talḥam* /vi/ to be obstinate, refuse to give way. *xadit if-fanṭa w-talḥamit ɛaleeha* she took the bag and refused to let go of it. *ma-ttalḥam-f*^{i} *kida - ḥaawil tifham illi b-aqul-huu-lak* don't be so stubborn - try to understand what I'm telling you! - vn *talḥama*; ava *mitalḥam*.

اتلّحم *ʔittalḥam* = *talḥam*.

ت ل س ك –

تلسكوب *tiliskoob* <perh Fr> /n pl *-aat*/ telescope.

ت ل غ ر –

تلغراف *tilixraaf* <perh Engl *telegraph*> /n pl *-aat*/ telegram, cable. - also *tillixraaf, tallixraaf*.

ت ل ف

تلف *tilif (a)* /vi/ **1** to become damaged or destroyed. *ʔaɛṣab-ha tilfit* her nerves were wrecked. ‖ *ʔis-salaf talaf* ≈ to lend is to lose. **2** to become corrupted or spoiled. *ʔil-wad da tilif min yoom ma raaḥ ig-gamɛa* this boy has been corrupted since he joined the university. - vn *talaf*; ava *talfaan, taalif*.

تلف *talaf (i)* /vt/ **1** to damage, wreck. *ʔil-ḥariiqa talafit*

il-maḥall the fire wrecked the shop. **2** to corrupt. *ṣaḥb-u talaf ʕaxlaaq-u* his friend corrupted his morals. - vn *talaf, talafaan*; ava *taalif*; pva *matluuf*.
تلفيّات *talafiyyaat* /pl n/ breakages, damage.
متلاف *mitlaaf* /adj/ extravagant, wasteful, prodigal.
توالف *tawaalif* /pl n/ things too damaged to function properly.
اتلف *ʔintalaf* /vi/ **1** to be damaged, be wrecked. **2** to be corrupted, be spoiled. *ʔibn-ak ik-kibiir intalaf* your eldest son has gone to the dogs. - vn *ʔintilaaf*; iva *mintilif*.
أتلف *ʔatlaf* /vt/ to damage, harm. *ʔil-xamra mutlifa liṣ-ṣiḥḥa* alcohol is injurious to the health. - vn *ʔitlaaf*; ava *mutlif*.

ت ل ف ز –

تلفيزيون *tilifizyoon* <Fr> /n pl *-aat*/ television.
تلفيزيوني *tilifizyooni* /adj */ of or pertaining to television. *muṣawwir tilifizyooni* television cameraman. ‖ *koora tilifizyoniyya* a black and white football. - *maska tilifizyoniyya* (unnecessarily) melodramatic goal save.
تلفيزيونجي *tilifizyongi* /adj pl *-yya/ [deris]* pertaining to television.

ت ل ف س

تلفس *talfis* /vi/ to be flabby, drip with fat. - vn *talfasa*; ava *mitalfis*.
اتّلفس *ʔittalfis* /vi/ to become or be made fat or flabby. - ava/iva *mittalfis*.

ت ل ف ن

تليفون *tilifoon* <perh Fr> /n pl-*aat*/ **1** telephone. **2** telephone call. *ʔiddii-ni* (or *ʔiqrab-li*) *tilifoon* give me a call. *ga-ni tilifoon* I got a telephone call.
تليفوني *tilifooni* /adj/ telephonic. *taḥwiil tilifooni* (money) transfer by telephone.
تلفن *talfin* /vt and vi/ to telephone, make a telephone call. - vn *talfana*; ava *mitalfin*.
اتّلفن *ʔittalfin* /vi/ to be telephoned. - iva *mittalfin*.

ت ل ك

تلك *talk: budrit talk* talcum powder. *ḥagar talk* talc, hydrous magnesium silicate.

ت ل ل [1]

تلّ *tall* /n pl *tiluul, tilaal*/ **1** mound, man-made hill, tell. *ʔil-balad di mabniyya ʕala tall[a] ʕaali* this village is built on a high mound. ‖ *xud min it-tall[i] yixtall [prov]* ≈ spending will consume any amount of money. - *tall il-ʔamar* (mount of the moon) heel of the hand (in palmistry). - *tall[i] kawkab iz-zuhra* (mount of Venus) ball of the thumb (in palmistry). **2** /pl *tiluul* only/ heap of dirt.

ت ل ل [2]

تلّ *tull* <Fr *tulle*> /n/ tulle, gauze.
تلّي *tulli[1]* **1** /n/ tulle. **2** /adj invar/ made of tulle. *namusiyya tulli* tulle mosquito net.
تلّية *tulliyya* /n pl *talaali, tulliyyaat/ [rur]* head-shawl of tulle. *maʕaana t-tarabiiʕ wit-talaali* cry of the vendor of haberdashery or notions.

ت ل ل ت –

تلّتوار *tallitwaar* <Fr *trottoir*> /n pl *-aat*/ pavement, sidewalk. - also *tilitwaar, tiritwaar, turutwaar*.

ت ل ل غ –

تلّغراف *tillixraaf, tillixraaf, tallixraaf* <perh Engl *telegraph*> /n pl *-aat, -aat*/ telegram, cable.
تلّغرافي *tillixraafi, tillixraafi, tallixraafi* /adj */ telegraphic. *ʕinwaan tillixraafi* cable address.
تلّغرافجي *tillixrafgi, tallixrafgi* /n pl *-yya/* telegraphist.

ت ل ل ى

تولّى *tulli[2]* <T *türlü*> /n/ dish of mixed vegetables. - also *turli, ṭurli*.

ت ل ل ي س

تليس *talliis* <Copt> /n pl *talaliis*/ large sack. ‖ *qaaʕid zayy it-talliis* ≈ sitting like a lemon.
تلّيسة *talliisa* /n pl *talaliis, tallisaat/* = *talliis*.

ت ل م

تلم *tilim[1] (a)* /vi/ **1** to become blunt. *ʔis-sikkiina tilmit xaaliṣ* the knife has become very blunt. **2** to become insensitive or thick-skinned. - vn *talma, talaama, talamaan*; ava *taalim*.
تلم *talam (i)* /vt/ to blunt. *ʔiṣ-ṣada ḥa-yitlim is-sikkiina* rust will blunt the knife. - vn *talma, talamaan*; ava *taalim*; pva *matluum*.
تلامة *talaama* /n/ **1** bluntness. **2** thick-skinnedness, insensitivity.
متلومة *matluuma* /fem adj/ loose, profligate, abandoned (of a woman).
تلمان *talmaan* /adj/ blunt.
أتلم *ʔatlam* /el/ **1** more/most blunt. **2** more/most insensitive or thick-skinned.
تلم *tilim[2]* /adj */ **1** blunt (of a blade). **2** thick-skinned, insensitive. *tilim zayy il-mizayyiniin* as bold as a barber.
تلّم *tallim* **1** /vt/ to cause to become blunt. – /vi/ **2** to

become blunt. **3** to be unresponsive. *ʃig-gaḫʃ[i] tallim fil-ʃarḍ[i] xalaaṣ* the donkey foal absolutely refused to budge. - vn *tatliim*; ava/pva *mitallim*.
اتّلّم *ʃittallim* /vi/ to become or be made blunt. - ava/iva *mittallim*.
اتّالم *ʃittaalim* /vi/ to become insensitive or thick-skinned. - ava *mittaalim*.
استتلم *ʃistatlim* /vt/ **1** to consider blunt. **2** to consider insensitive or thick-skinned. — /vi/ **3** to become blunt. **4** to become insensitive or thick-skinned. - vn *ʃistitlaam*; ava *mistatlim*.

ت ل م ز
تلميذ *tilmiiz* /n pl *talamiiz, talamza*/ **1** pupil, schoolchild, student. *tilmiiz ḫirafi↑* apprentice. **2** *[Chr]* disciple.
تلمذة *talmaza* /n/ apprenticeship.
اتّلمذ *ʃittalmiz* /vi/ to become or be made a student or disciple of (s.o. or s.th.). - vn *talmaza*; iva *mittalmiz*.

ت ل ى [1]
تلا *tala[1] (i, u↑)* /vt/ to recite. *bi-yitlu l-qurʃaan ṭuul il-leel fi-ramaḍaan* they recite the Koran all night long during Ramadan. - vn *tilaawa*; ava *taali*; pva *matli*.

ت ل ى [2] see also و ل ى
تلا *tala[2] (i)* /vt/ to follow. - vn *tuluww*; ava *taali*.
تالى *taali* /adj/ following. *bit-taali* consequently, as a consequence.

ت ل ى ا ن see ط ل ى ا ن : *talyaani*

ت ل ى و
تليو *tilyu* <It *tiglio*> /n/ dried lime blossoms (used in the preparation of an infusion).

ت م ب ا ك
تمباك *tumbaak, timbaak* <perh Gk *toumpeki*> /n/ type of finely cut tobacco, wrapped in a broad leaf, for smoking in a *ʃiiʃa*. - also *ṭumbaak*.

ت م ب ا ل
تمبالة *timbaala* <It *timballo*> /n/ kettledrum.

ت م ب ا -
تمباني *timbaani* <perh It> /n/ timpani, orchestral kettledrums.

ت م ب ك [1] see ت م ب ا ك : *tumbaak, timbaak*

ت م ب ك [2] see ت ن ب ك [1] : *ʃittambak*

ت م ب ل see ت ن ب ل : *tambal, tambil, ʃittambil*

ت م ب و
تمبو *timbu↑* <perh It> /n/ tempo.

ت م ب و ل
تومبولة *tumboola* <It> /n/ tombola.

ت م ب ى ل [1]
تمبيلة *tambiila* /n pl *-aat*/ *[carp]* strip of wood fixed to bottom rail of windows and doors to lengthen them when they are too short.

ت م ب ى ل [2] see ت م ب - ء : *tumbiil*

ت م ت م
تمتم *tamtim* /vi/ to mumble. - vn *tamtama*; ava *mitamtim*.

ت م ر [1]
تمر *tamr* /coll n/ dried dates. ‖*tamr[i] hindi* tamarind. - *tamr[i] ḫinna* henna plant, Egyptian privet. - *tamr[i] ḫinna ʃafrangi* mignonette.
تمرة *tamra* /n pl *-aat*/ **1** /unit n/ a dried date. ‖*ma-yiʕraf-ʃ it-tamra min ig-gamra [prov]* (he can't tell a dried date from an ember) ≈ he doesn't know his arm from his elbow. **2** glans (of the penis).

ت م ر [2]
تمرجي *tamargi* <T *tımarcı*> /n pl *-yya*/ (male) nursing assistant.
تمرجيّة *tamargiyya* /n pl *-aat*/ female nursing assistant.
تمّر *tammar[1]* <T *tımar* from P> /vt/ to take care of, attend to (animals, especially horses). - vn *tatmiir*; ava/pva *mitammar*.

ت م ر [3] see س م ر [4] : *tamar, tammar[2]*

ت م س ا ح
تمساح *timsaaḫ* <Copt> /n pl *tamasiiḫ*/ crocodile. *dimuuʕ it-tamasiiḫ* crocodile tears. ‖*kureek timsaaḫ* large hand-operated type of car jack. - *sarraaq timsaaḫ [carp]* handsaw.

ت م ل ل ي
تملّى *tamalli* <T *temelli*> /adv/ continually, always. *tamalli yikdib* he always lies. *saʕit-ha tamalli b-tuqaf* her watch keeps on stopping.

ت م م

تمّ *tamm*[1] *(i)* **1** /vt/ to accomplish, render complete. *ʕif-ʃahr illi gayy*[i] *ħa-ytimm*[i] *xamas siniin* he'll be five years old next month. *ʕit-toob tamm*[i] *talatiin mitr* the bolt of cloth was a full thirty metres in length. **2** /vi/ **2a** to become complete, be completed, be accomplished. *sinan-ha tammit* she got her full set of (adult) teeth. *tamm il-ittifaaq benhum* the agreement between them was concluded. **2b** to be effected, take place, occur. *ɛamaliyyiteen yitimmu f-nafs il-waqt* two operations that take place simultaneously. *ʕil-imtiħaan ma-bi-ytimm*[i]*-ʃ ɛaʃwaaʕi* the exam is not conducted in a haphazard fashion. - vn *tamaam, tamamaan*; ava *tamm, taamim*; pva *matmuum*.

تمام *tamaam* **1** /n/ completeness. *ʕaaxir tamaam* or *tamaam it-tamaam* absolutely perfect. ‖ *ɛala t-tamaam* or *bit-tamaam* entirely, completely, wholly. - *ʕidda tamaam [mil]* to report all present and correct. - *ţabuur it-tamaam [mil]* roll call. **2** /adj invar/ perfect. *raagil tamaam* a real man. *kull-u tamaam* everything is O.K. *xabaţ xabţa tamaam ɋawi* he pulled off a really O.K. deal. **3** /adv/ completely, perfectly. *ʕuxt-i ʃabah-i tamaam* my sister looks exactly like me. *ʕig-gihaaz maafi tamaam* the equipment is working perfectly.

¶ *tamaaman* /adv/ absolutely, completely.

تامّ *tamm*[2], *taamm*↑ /adj/ **1** complete. *ɛandu ʕilmaam taamm*[i] *bil-ɛamal* he has a complete grasp of the work. **2** perfect. *fi-waḍɛ*[i] *ʕufuqi taamm* in a perfect(ly) horizontal position.

تمّة *tamma, timma* /n/ completeness, fullness. *ʕaadi timmit il-ɋiṣṣa* this is the end of the story. ‖ *ɛala tammit* (also *ţammit*) *ɛeen-(u)* full to the brim. - *ʕis-sabɛa w-timmit-ha* (or *w-dimmit-ha*) every conceivable evil.

أتمّ *ʕatamm*[1] /el/ more/most complete or perfect. *huwwa xallaṣ if-fuxl*[a] *ɛala ʕatamm*[i] *wagh* he did the work in the most complete and satisfactory way. *ɛala ʕatamm istiɛdaad* in full readiness.

تميمة *tamiima*↑ /n pl *tamaayim*/ amulet, charm.

متمّة *mitamma: ʕaxrit il-mitamma* ≈ to add insult to injury, the last straw.

تمّم *tammim* /vt/ to complete, put an end to, conclude. *ʕif-fawiif tammim il-maħḍar wi-ɋafal-u* the sergeant concluded the police report and closed it. ‖ *rabb-i-na ytammim bi-xeer* may Our Lord grant a successful conclusion! (a compliment paid, e.g., to the couple and their parents at an engagement party). - vn *tatmiim*; ava/pva *mitammim*.

¶ *tammim ɛala* to check, to inspect (s.th.). *ʕibɋa tammim ɛala f-fuxl*[i] *ɋabl*[i] *ma trawwaħ* please inspect the work before you go home.

تتمّة *tatimma*↑ /n/ conclusion. *ʕeeh tatimmit l-ɋiṣṣa* what is the end of the story?

أتمّم *ʕittammim* /vi/ passive of *tammim*. - iva *mittammim*.

أتمّ *ʕatamm*[2]↑ = *tamm*[1] 1. - vn *ʕitmaam*; ava *mutimm*.

استتمم *ʕistatmim* /vt/ to complete, conclude. - vn *ʕistitmaam*; ava/pva *mistatmim*.

استتمّ *ʕistatamm* **1** /vt/ to finalize. *ʕistatamm*[i] *ʕumuur safar-u* he finalized his travel arrangements. **2** /vi/ to be or become completed. - vn *ʕistitmaam*; ava/pva *mistatimm*.

ت م ن [1]

ثمن، تمن *taman*[1] /n pl *ʕatmaan*/ price. *ʕin-naṣr*[i] *fil-ħarb*[i] *taman-u t-taḍħiyya* the price of victory in war is sacrifice. ‖ *kull*[i] *ʃee ʕ bi-taman-u* everything has its price. - *ʕil-ɣaali taman-u fii* expensive things are worth every penny in quality.

ثمين *samiin* /adj/ valuable, precious.

ثمّن، قمّن *tammin*[1] /vt/ to put a price on, appraise the value of. - vn *tatmiin*; ava/pva *mitammin*.

مثمّن، متمّن *mutammin* /n */ professional appraiser, valuer.

أتمّن *ʕittammin* /vi/ to be priced. - iva *mittammin*.

ت م ن [2]

ثمان، تمان *taman*[2] /num: in constr w foll n pl; usu *tamant* when followed by n pl ordinarily w initial hamza/ eight. *taman kutub* eight books. *tamant iyyaam* eight days. *tamant alaaf* eight thousand.

ثمانية، تمانية *tamanya* /num: in absol state, in apposition, or w foll n sing in contexts of ordering and itemizing; pl *-aat*/ eight. *miyya w-tamanya* one hundred and eight. *ṣafħit tamanya* page eight. *ʕil-laɛɛiiba tamanya* the players are eight (in number). *tamanya saax* eight piastres. *haat tamanya biira* bring eight beers! ‖ *yoom tamanya (min) ʃahr*[i] *tamanya* the eighth of August. - *tamanyaat* the top inner corners of the goal (in soccer).

¶ *tamanyaat (tamanyaat)* /adv/ in eights, eight at a time.

ثمن، تمن *tumn* /n pl *ʕitmaan*/ **1** one eighth, eighth part. **2** *[obsol]* **2a** district or precinct of a city. **2b** police station of a district or precinct.

ثمنة، تمنة *tumna* /n pl *tuman*/ **1** *[obsol]* unit of weight equal to 2.5 *wiqqa* or 3.12 kilogrammes. **2** unit of dry measure equal to 0.258 litres.

ثامن، تامن *taamin* /adj/ eighth.

ثمانية عشر، تمانتاشر *tamantaaʃar* **1** /num pl *-aat*/ eighteen. **2** *ʕit-tamantaaʃar* /adj invar/ the eighteenth.

ثمانين، تمانين *tamaniin* **1** /num pl *-aat*/ eighty. **2** *ʕit-tamaniin* /adj invar/ the eightieth.

تمنميّه، ثمانمائة *tumnumiyya* **1** /num pl *-aat*/ eight hundred. **2** *ʕit-tumnumiyya* /adj invar/ the eight-hundredth.

تمّن، ثمّن *tammin*[2] /vt/ to make eight-sided or octagonal. - vn *tatmiin*; ava/pva *mitammin*.

متمّن، مثمّن *mitammin* **1** /adj/ octagonal, eight-sided. **2** /n pl *-aat*/ octagon.

ت م ن ى

تمونيه *timunya* <It *antimonio*> /n/ antimony.

ت م و ر

تيمور *timuur*↓ <prop name *Taymur*>: *manga timuur* large, dark-green variety of mango. - also *taymuur*.

ت ن ا

تنا *tana*[1] /n/ honour. *ma-luu-ʃ ʁarḍ*[i] *wala tana* he has neither honour nor dignity.

[1] ت ن ب ك

تنبك *tanbik* /vi/ to sit royally. - vn *tanbaka*; ava/pva *mitanbik*.

اتّنبك *ʔittanbik, ʔittambak* /vi/ to sit at one's ease, loll. *ʔittanbik fik-kursi ʁaamil nafs-u ʔabu ʁali* he lolled about in the chair putting on airs. - ava *mittanbik*.

[2] ت ن ب ك see ت م ب ا ك: *tumbaak, timbaak*

ت ن ب ل

تنبل *tambal* <P *tanbal*> /adj pl *tanabla*/ extremely lazy. ‖*tanablit is-sulṭaan* three fairy-tale characters of legendary indolence employed to amuse the sultan. *ʁamliin zayy*[i] *tanablit is-sulṭaan* behaving in an extremely indolent fashion.

تنبل *tambil* /vi/ to be or become sluggardly, be idle. - vn *tambala*; ava *mitambil*.

اتّنبل *ʔittambil* /vi/ to become sluggardly, idle or indolent. - ava *mittambil*.

ت ن ت

تانت *tant* <Fr *tante*> /n/ **1** aunt, auntie. **2** respectful form of address and reference to an older woman. - also *ṭanṭ*.

ت ن ت ر –

تنترليه *tanturleeh* <Fr *teinturerie*> /n/ dry-cleaning establishment.

ت ن ت ف

تنتف *tantif* /vt/ to cut or tear into small pieces, dismember. - vn *tantafa*; ava/pva *mitantif*.

تنتوفة *tantuufa* /n pl *tanatiif*/ morsel, small piece. ‖*ma-ḫelt-uu-ʃ wala tantuufa* ≈ he hasn't a penny to his name.

اتّنتف *ʔittantif* /vi/ to be cut into small pieces, be dismembered. - iva *mittantif*.

ت ن ت ل

تنتلّة *tantilla* <Fr *dentelle*> /n/ lace. - also *dantilla*.

[1] ت ن ت ن

تنتن *tantin* /vi/ to strum, hum. *b-atantin ʁal-ʁuud* I strum on the lute - also *dandin*. - vn *tantana*; ava *mitantin*.

[2] ت ن ت ن see د ن ت ل ل: *tantan, tantana*

ت ن ج ر

تنجرة *tangara* <T *tencere*> /n pl *tanaagir*/ *[obsol]* casserole dish. - also *ṭangara*.

ت ن ح see also ت ل ح

تنح *tiniḫ, tinḫ* /adj */ insensitive, thick-skinned, impervious to hints.

تناحة *tanaaḫa* /n/ insensitivity, thick-skinnedness, imperviousness to hints.

أتنح *ʔatnaḫ* /el/ more/most insensitive, thick-skinned, impervious etc.

تنّح *tannaḫ* /vi/ to become mulish, become stubborn and dense. *ʔil-bihiim il-mitannaḫ ma-ygii-ʃ ʔilla biḍ-ḍarb* the mulish beast will co-operate only when beaten. *muxx-i tannaḫ* my mind seized up. *muxx-u mtannaḫ* he's dense. - vn *tatniiḫ*; ava *mitannaḫ*.

اتّنح *ʔittanaḫ* /vi/ to become mulish, stubborn, dense, and thick-skinned. - ava *mittanaḫ*.

استتنح *ʔistatnaḫ* **1** /vt/ to consider insensitive or thick-skinned. **2** /vi/ to become insensitive or thick-skinned. - vn *ʔistitnaaḫ*; ava *mistatnaḫ*.

ت ن د

تندة *tanda* <It *tenda*> /n pl *tinad, tandaat*/ awning.

ت ن د ر

تندر *tandar* /n/ *[anat]* flexor tendon.

ت ن ر

تنر *tinar* <Engl *thinner*> /n/ **1** paint thinner. **2** spot remover.

[1] ت ن س

تنس *tinis* <Engl> /n/ tennis. *tinis iṭ-ṭawla* table tennis.

ت ن س [2] see ت و ن س: *tuunis*[1], *tuunus*, *tunsi*, *tuunis*[2]

ت ن ك [1]
تنك *tank* <Engl> /n pl *-aat, tanaaki*↓/ storage tank. *tank*[i] *banziin* petrol tank. *tank*[i] *ʂabuura* ballast tank, buoy.
تنّك *tannik* **1** /vt/ to bloat (of food). **2** /vi/ to become bloated with food. - vn *tatniik*; ava/pva *mitannik*.
اتنّك *ʃittannik* /vi/ to become full, become bloated with food. *kal wi-ttannik* he ate till he was fit to burst. - ava *mittannik*.

ت ن ك [2]
تنكة *tanaka* <T *teneke*> /n pl *-aat*/ metal pot used for brewing Turkish coffee. - also *kanaka*.

ت ن ك ا ر
تنكار *tinkaar* /n/ tincal, borax.

ت ن ن [1]
تنّ *tann* (also *tannit*) <perh Copt> /w suff; perf: *tann-u/tannit-u, tann-a-ha/tannit-ha, tann-u-hum/ tannit-hum, tann-ak/tannit-ak, tann-ik/tannit-ik, tann-u-ku(m)/tannit-ku(m), tann-i/tannit-ni, tann-i-na/ tannit-na*; imperf: *yitann-u/yitannit-u, titann-a-ha/ titannit-ha, yitann-u-hum/yitannit-hum, yitann-ak/ yitannit-ak, titann-ik/titannit-ik, titann-u-ku(m)/ titannit-ku(m), ʃatann-i/ʃatannit-ni, nitanni-na/ nitannit-na*/ quasi-verb indicating **1** the continuousness or habitualness of an action or state. *tann-i daaxil* further and further in I went. *titann-u-ku maʃyiin* keep on going. *tann il-waad yinaadi ɛaleeha l-ɣaayit ma tnabaḥ* the boy kept on calling out to her until he was hoarse. *laazim yitann-u maaʃi* he must keep on going. *yitann-u-hum maʃyiin* they keep on going. *ʃis-sitt*[i] *tannit-ha mittaxda* the woman remained upset. *ya reet titann-ik wayyaaya* I wish you could stay with me. **2** the immediate succession of one action or state to another. *ɕaddimt it-tazkara w-tann-i ṭaliɛ ɛala fooɕ* I presented the ticket and then went straight upstairs. *ʃaafu g-gurnaal wi-tann-u-hum ṭayriin ɛaʃ-ʃirka* they saw the newspaper and rushed straight off to the company.

ت ن ن [2] ( )
تنّة *tinna: ma-luu-ʃ (ma-lha-ʃ) tinna* he (she) has no principles.
تنّين *tinniin* /n pl *-aat, tananiin*/ dragon. *maari girgis wit-tinniin* St. George and the dragon.

ت ن ن ي ه
تنيه *tinneeh* /n pl *-aat*/ *[Chr]* alb.

ت ن و
تنوة *tanwa* /n/ dregs (of Turkish coffee).

ت ن ى [1]
تنى، ثنى *tana*[2] *(i)* /vt/ **1** to bend. *ʃitnu riglee-ku w-rukab-ku* bend your legs and knees. *tana raas-u l-taḥt* he bent his head down, he hung down his head. **2** to fold. *taneet ḥarf-u* I folded its edge. *deel matni ɛala makana* a hem turned up by machine. **3** *[naut]* to reef. - vn *tany, taniyya*; ava *taani*; pva *matni*.
تنية، ثنية *tanya* /n pl *-aat*/ **1** instance noun of *tany*. **2** fold, bend. *tanyit id-diraaɛ* the crook of the arm. **3** hem. *tanyit banṭaloon* trouser turn-up, trouser cuff. **4** *[naut]* reef (in a sail).
تنيّة *taniyya* /n pl *-aat*/ fold, bend.
أثناء *ʃasnaaʕ* /prep/ during. ‖*fil-ʃasnaaʕ di* during this time.
اتنى *ʃittana* /vi/ passive of *tana*. *laazim yittini ʃin-nuṣṣ* it must be folded in half. - iva *mittini*.
انتنى، انثنى *ʃintana* = *ʃittana*. - iva *mintiḥi*.
تنّى، ثنّى *tanna*[1] /vt/ to bend or fold (a number of things, or one thing a number of times). - vn *tatniyya*; ava/pva *mitanni*.
اتنّى، انثنّى *ʃittanna* /vi/ **1** to be bent or folded (of a number of things or of one thing a number of times). **2** to sway (of a woman in walking). - ava/iva *mittanni*.
أثنى *ʃasna* /vi/ to speak in praise, express admiration. *kull iṭ-ṭalaba b-yisnu ɛalee* all the students praise him. - vn *sanaaʕ*; ava *musni*.
استثنى *ʃistasna* /vt/ to make an exception of. *bi-ndaffaɛ kull iṭ-ṭalaba maṣariif laakin bi-nistasni ʃawlaad il-ʃasaṭza* we charge all the students expenses, but we except the children of professors. - vn *ʃistisna, ʃistisnaaʕʔ*; ava *mistasni*; pva *mustasna*.
استثناء *ʃistisnaaʕʔ* /n pl *-aat*/ exception. *bi-stisnaaʕ* ... with the exception of ....
استثنائى *ʃistisnaaʕiʔ* /adj/ exceptional. *ḥaala stisnaaʕiyya* an exceptional situation.

ت ن ى [2]
اثنين، اتنين *ʃitneen* **1** /num, pl *-aat*/ two. *waaḥid ɕuɣayyar wi-tneen kubaar* one small and two large. *humma l-itneen* both of them. *ʃahr itneen* February. - /adverbially/ *ʃilli-nta ɛayz-u taxd-u tneen* whatever you want you can take twice over. **2** (also *yoom itneen*) /n/ (any) Monday. *yoom l-itneen* Monday.

¶ *ʔitnenaat* /adv/ in twos, by twos.

اتناشر، اثنا عشر *ʔitnaafar* **1** /num pl *-aat*/ twelve. **2** *ʔil-ʔitnaafar* /adj invar/ the twelfth.

ثانى، تانى *taani* /adj */ **1** second. *ʔil-ħarb il-ɛaalamiyya t-tanya* the Second World War. **2** other, another. *baɛd[i] ɛiʃriin yoom tanyiin* after another twenty days. *ma-tgii-ʃ la bukra wala ʔayy[i] yoom taani* don't come tomorrow or any other day! *ʔit-tanyiin feen* where are the others? *ɛandak taani* have you any other? *miʃ ɛaawiz min da - ɛaawiz min it-taani* I don't want (any) of that, I want (some) of the other. **3** next, following. *rigiɛna taani yoom* we returned the following day. *taani marra ma-titʔaxxar-ʃ* next time don't be late. ‖ *kull[i] yoom wit-taani* (too) often. *- hiyya t-tanya gat* she, in her turn, came. — /adv/ **4** again, more. *miʃ ħ-akallim-ak taani* I'm not going to speak to you again. *kul taani* eat some more! *fii ʔeeh taani* what else is there?

¶ *min taani* /adv/ over again.

التوانى *ʔit-tawaani* /pl n in constr/ of the second grade (of quality). *quṭn it-tawaani* second-grade cotton.

ثانيا *saaniyan* /adv/ secondly.

ثانية *sanya* /n pl *sawaani, sanyaat*/ second (time unit). ‖ *sanya waħda* just a moment!

ثانوى *sanawi[i]* /adj */ **1** secondary. *madrasa sanawiyya* school for children in the 15-18 age group, high school. *ʃahaada sanawiyya (ɛamma)* high school certificate. **2** pertaining to high school. *hiyya fiṣ-ṣaff il-ʔawwil is-sanawi* (or *fi-ʔuula sanawi*) she's in the first year of high school.

الثانويّة *ʔis-sanawiyya* /n/ **1** the last year of secondary school. **2** (also *ʔis-sanawiyya l-ɛamma*) the secondary school certificate.

ثنائى *sunaaʔi* /adj/ **1** dual. **2** bipartite. **3** *[mus]* two-four (time). — /n/ **4** *[mus]* duo, duet.

تنيّة *tiniyya: ʔabu miyya yiħsid ʔabu tniyya [prov]* (the man with a hundred (animals) envies the man with a (single) two-year-old animal) the rich are never satisfied.

ثنّى، تنّى *tanna[2]* /vt/ to do (s.th.) a second time. *tanni* do (it) again! - vn *tatniyya*; ava *mitanni*.

ت ن ى [3]

تنية *tinya* <prob Engl> *[path]* tinea, ringworm.

ت ن ى ا

تونيا *tunya* /n pl *-aat*/ *[Chr]* alb, tunic.

ت ن ى ك

تونيك *tuniik* <Fr> /n/ tunic.

ت ه

ته *tih* /fem n, pl *-aat*/ third letter of the Arabic alphabet. - also *taa, taaʔ, teeh*.

ت ه ت ه

تهته *tahtih* /vi/ to stutter, stammer. - vn *tahtaha*; ava *mitahtih*.

ت ه م

تهم *taham (i)* /vt/ to accuse (usually without evidence). *tahamuu f-sirɋit il-ħumaar* they accused him of stealing the donkey. *huwwa kaan mathuum fil-bint* he was accused concerning the girl (i.e. of having seduced her). - vn *tuhma*; ava *taahim*; pva *mathuum*.

تهمة *tuhma* /n pl *tuham*/ accusation. *ʔit-tuhma di lizɋit fii* this accusation stuck to him. *ʔit-tuhma btaɛt-i ɋatl* the charge against me is murder. ‖ *wiff[i] it-tuham* criminal type.

انتهم *ʔintaham* /vi/ to be accused. - iva *mintihim*.

اتّهم *ʔittaham* /vt/ to accuse. *ʔittahamuu-ni bi-xtilaas ʔalf[i] gneeh* they accused me of embezzling a thousand pounds. - vn *ʔittihaam*; ava *mittihim*; pva *muttaham↑*.

متّهم *muttaham* /n */ *[leg]* accused.

ت و ء م

توأم *tawʔam* /n/ **1** /pl *tawaaʔim*/ sibling in a multiple birth. *tawʔameen* twins. - also *toom*. **2** *ʔit-tawʔam* /no pl/ *[astrol]* Gemini.

ت و ب [1]

تاب *taab (u)* /vi/ to repent and desist (from a vice). *tubt[i] li-llaah ɛan ʃamm ik-kukayiin* I swore to God to give up sniffing cocaine. *huwwa-nta ma-bi-ttub-ʃ[i] ʔabadan* you never give up your evil ways. - vn *tooba*; ava *taayib*.

¶ *taab ɛala* to unburden, relieve (of God). *rabb-i-na ytuub ɛaleehum mil-ɛiyaal* may God relieve them of the burden of their children! *ʔallaah yituub ɛaleena min ruʔyit is-safliin* God relieve us of the sight of (such) awful people! *rabb-i-na ytuub ɛaleena miʃ-fuxlaana l-miħabbiba di* God relieve us of this lousy work!

توبة *tooba* **1** /n/ repentance. **2** /adv/ never again. *tooba (min* or *ʔiza* or *ʔin* etc.). I'll never do (such and such) again, as in *tooba min di n-nooba* I'll never do it again, *tooba ʔin kunt astaɛɋad fid-daggaliin* never again will I put my trust in con men, *tooba ʔin kunt[i] raaħ ʔaskar taani* never again will I get drunk.

توّاب *tawwaab* /n/ Granter of forgiveness (epithet of God).

توّب *tawwib* /vt/ to induce renunciation in (s.o.). *ʔana*

ḫ-aɛraf ʕatawwib-ak ɛan ik-kasal da I'll be able to make you give up this laziness! - vn *tatwiib*; ava/pva *mitawwib*.

اتوّب *ʕittawwib* /vi/ passive of *tawwib*. - iva *mittawwib*.

[2] ت و ب

اتاوب، تثاءب *ʕittaawib* /vi/ to yawn. *bi-tittaawib kitiir leeh* why are you yawning so much? - vn *mitawba*; ava *mittaawib*.

[3] ت و ب

توب، ثوب *toob* /n pl *ʕatwaab*/ **1** bolt (of cloth). **2** dress (particularly a long type). *toob il-faraḫ* wedding-dress. ‖*min toob-u* of his kind, as in *ʕiḫna mif min tob-ha* we're not her type. - *laabis toob ɤeer toob-u* he is trying to pass himself off as something he is not.

[1] ت و ت

توت *tuut*[1] /coll n/ **1** mulberry, mulberries. **2** mulberry tree(s).

توتة *tuuta*[1] /unit n, pl *-aat*/ **1** a mulberry. **2** a mulberry tree.

توتاية *tutaaya* = *tuuta*[1].

توّت *tawwit* **1** /vi/ to turn black and blue (as though hurt or bruised). *ʃafayf-i tawwitit mil-bard* my lips turned blue with cold. **2** /vt/ to make black and blue. *ḫ-atawwit-lu ɛeen-u* I'll give him a black eye. - vn *tatwiit*; ava/pva *mitawwit*.

اتوّت *ʕittawwit* /vi/ to become or be made black and blue (as though bruised). - ava/iva *mittawwit*.

[2] ت و ت

توت *tuut*[2] <Copt> /n/ the first month of the Coptic year (mid-September to mid-October).

توتيّة *tutiyya: ʕis-sana t-tutiyya* the starting date of the Coptic calendar, i.e. 283 A.D.

[3] (ت و ت)

توت *tuut*[3] <Copt>: *tuut ḫaawi (tuut)* call of an itinerant conjurer.

توتة *tuuta*[2]*: wi-tuuta tuuta firɤit il-ḫadduuta* terminating phrase for a children's story ≈ and so the story is done.

ت و ج

تاج *taag* /n pl *tigaan*/ **1** crown (of a king, priest etc.). ‖*siid(-u) w-taag raas(-u)* ≈ (his) lord and master, one greatly superior to (him), as in *ʕinta siid-i w-taag raas-i* I honour you greatly, *da-na siid-ak wi-taag raas-ak* you're not worthy to touch the hem of my dress! **2** capital (of a column).

توّج *tawwag* /vt/ to crown. - vn *tatwiig*; ava *mitawwig*; pva *mutawwag*↑.

اتوّج *ʕittawwig* /vi/ to be crowned. - iva *mittawwig*.

ت و ر

تور، ثور *toor* /n/ **1** /pl *tiraan*/ bull, ox. *guḫa ʕawla b-laḫm*[i] *toor-u [prov]* (Goha is more entitled to the flesh of his ox) ≈ a man has first claim on his own property. *toor allaah fi-barsiim-u [prov]* (God's ox in His clover) one who is stupid but content. *laa-lu fit-toor wala fiṭ-ṭiḫiin [prov]* (he has nothing to do with either the ox or the milling) he has no hand in the matter. *ʕaqul-lak toor tiqul-li ʕiḫlib-u [prov]* (I tell you 'Ox' so you tell me 'Milk it') (1) you are not paying attention, you are being dumb. (2) you insist on attempting the impossible. *ɛumr il-mara ma trabbi toor wi-yduur fis-saqya [prov]* (a woman can never raise an ox that would turn the water-wheel) ≈ a woman cannot properly raise a boy by herself. **2** *ʕit-toor* /no pl/ *[astrol]* Taurus. **3** /fem *toora*/ oaf, dolt.

ثيران *siiraan* /pl n/: *muṣarɛit is-siiraan* bull-fighting.

ت و ر ا ه

التوراه *ʕit-tawraah* /n/ the Torah.

ت و ز

توزة *tooza* /n pl *-aat*/ long double-ended drum (used at *zaar* ceremonies).

ت و ك

توكة *tooka* <T *toka*> /n pl *-aat, tiwak*/ **1** buckle. **2** decorative hairpin or slide.

ت و ل

تول *tawal (i)* /vt/ to daze, incapacitate mentally, bewilder. - vn *tawal, tawalaan*; ava *taawil*; pva *matwuul*.

اتوّل *ʕittawal* /vi/ to become or be made dazed, mentally incapacitated or bewildered. - ava/iva *mittiwil*.

انتول *ʕintawal* = *ʕittawal*. - ava/iva *mintiwil*.

ت و ل ت

تواليت *tuwalitt, tiwalitt, tawalitt*↓ <Fr *toilette*> /n/ **1a** grooming, smart appearance. *ɕabuun tuwalitt* toilet soap. **1b** (women's) evening-dress. *labsa tuwalitt* wearing evening-dress. **1c** cosmetics, make-up. *ʕis-sitt*[a] *ḫaṭṭit tuwalitt* the woman put on make-up. **2** /pl *-aat*/ bathroom, lavatory. *ɛamal tuwalitt* to go to the lava-

tory. – /adj invar/ **3** dressy (of women's clothes, etc.). *ʕif-ʃanṭa di sboor miʃ tuwalitt* that's a casual bag, not for dressy occasions.

تولت *tawlit* /vt/ to groom, make up (o.s.). - vn *tawlata*; ava/pva *mitawlit*.

اتّولت *ʔittawlit* /vi/ to become or make oneself groomed or made-up. - ava/iva *mittawlit*.

ت و م [1]

توم، ثوم *toom*[1] /n/ garlic.

تومّية، ثومّية *tomiyya* /n/ dish of meat in gravy flavoured with garlic.

ت و م [2]

توم *toom*[2] /n pl *tiwaam*/ twin(s). - also *tawʔam*.

(ت و ن)

تون *toon* <prob Engl> /n pl *-aat*/ *[mus]* interval of a tone. *rubɛ*[i] *toon* quarter tone. *nuṣṣ*[i] *toon* semitone.

تونة *tuuna* <prob Engl> /n/ tuna fish, tunny.

ت و ن ت –

تينتوت *tiwintoot* <Engl *twin tote*> /n pl *tiwintaat*/ double bet.

ت و ن س [1]

تونس *tuunis*[1], *tuunus* /prop n/ **1** Tunis. **2** Tunisia.

تونسي *tunsi* /pl *tawansa*/ **1** /adj/ Tunisian. **2** /n/ a Tunisian.

ت و ن س [2]

تونس *tuunis*[2] (also *ṭuunis*) /n pl *tawaniis*/ rope which fastens the water pots to the *saqya* (see Pl.E, 12).

ت و ه

تاه *taah (u)* /vi/ **1** to go astray, get lost. *taayih ɛan il-beet* unable to find the house. *di taahit ɛan baal-i* that slipped my mind. *taayih fin-noom* drowsy. ‖*tuht*[i] *ɛan il-waɛy* I lost consciousness. **2** to be forgetful, have one's mind wander. *huwwa-na tayha ɛan is-sitt*[i] *di* could I possibly forget this lady? - vn *tawahaan*; ava *taayih*.

تايه *taayih* /ava/ ‖*sarrax* (or *ṣawwat*) *lamma gaab* (or *lamm*[a] *ɛalee*) *it-tayhiin* he screamed till he brought (even) the lost, he bellowed his lungs out. - *gaab it-tayha* he did the impossible, he did miracles. - *gaab laha t-tayha* he brought her to unimagined heights of (sexual) ecstasy.

توّه *tawwah* /vt/ **1** to cause to go astray. *beet-u ma-ytawwah-ʃ* his house is not difficult to find. **2** to cause to forget. *m-aɛraf-ʃ*[i] *ʔeeh illi tawwah-ha min baal-i* I don't know what made me forget about it. - vn *tatwiih*; ava/pva *mitawwah*.

اتّوه *ʔittawwah* /vi/ to be led astray. - iva *mittawwah*.

ت و و

توّ *taww* particle indicating the immediate occurrence of an action. *tawwu gayy* (1) he has just arrived. (2) he'll soon be here. *tawwina nazliin* (1) we've just come down. (2) we are just going down. *tawwaha wakla* she's just eaten.

¶ *tawwan* and *fit-taww* /adv/ immediately. *ḥ-agii-k fit-taww*[i] *(wil-laḥẓa)* I will come to you immediately. - *taww*[i] *ma* /conj/ as soon as, immediately after. *taww*[i] *ma nzilna mil-ʔutubiis xadna taks* right after we had got off the bus, we took a taxi. *taww*[i] *ma nxallaṣ iʃ-ʃuɣl*[a] *ḥa-nfuut ɛaleek* as soon as we finish work, we'll drop in on you.

ت و ى

متوى، مثوى *matwa* /n pl *mataawi*/ refuge, shelter. *ma-luu-ʃ matwa* he's homeless.

تاوى *taawa* /vt/ **1** to shelter, protect, give refuge to. *laaziṃ titaawi l-ɛiyaal mil-bard* you must protect the children from the cold. **2** to cause to disappear, hide away. *ʔil-mudiir taawa nuṣṣ il-mizaniyya* the director spirited half the budget away. - vn *mitawiyya*; ava/pva *mitaawi*.

اتّاوى *ʔittaawa* /vi/ **1** to take or be given refuge. **2** to be hidden away. - ava/iva *mittaawi*.

ت ى ب

تيب *tiib* <prob Fr *type*> /n/ distinct (facial) type, distinct character (especially in the terminology of theatre and film-making). *miʃ mafruuḍ ʔinnaha tkuun gamiila ɋadd*[i] *ma tkuun liiha tiib* she's not supposed to be pretty so much as possessed of a distinct (facial) character.

ت ى ب س س

تايباس *taybass* <Fr *taille basse*> /adj invar/ low-waisted (dress etc.).

ت ى ب ل س

تيوبلس *tiyublis* <Engl> /adj invar/ tubeless. *ʔiṭaraat tiyublis* tubeless tyres.

ت ى ت

تيتة *teeta* <perh Gr *têthê*> /n/ *[children]* title of, and polite form of address to, an elderly woman, especially a grandmother.

ت ى ت ر
تياترو *tiyatru* <It *teatro*> /n pl *tiyatraat*/ *[obsol]* theatre.

ت ى ت ل
تيتل *teetal* /n pl *tayaatil*/ **1** variety of wild goat. **2** Don Juan, skirt-chaser.

ت ى ج
تيج *tiij* (also *tiif* or *tiifa*) <Fr *tige*> /n pl *ʕatyaaj, tiyaaj*/ **1** cable (of the type used in vehicles). *tiij faraamil* brake-cable. *tiij dibriyaaj* steel cable joining clutch pedal and disc. **2** pawl.

ت ى ح
انتاح *ʕintaaḥ* /vi/ to be allowed, permitted, or made possible. - iva *mintaaḥ*.
أتاخ *ʕataaḥ* /vt/ to allow, permit, make possible (to or for s.o.). *ʕana ʃaakir illi ʕataḥt-i-li furṣit ziyaarit il-maṣnaɛ* I am grateful for your giving me the chance to visit the factory. -/the literary passive also occurs/ *ʕutiḥ-li zyaart il-maṣnaɛ* I was allowed to visit the factory. - vn *ʕitaaḥa*; ava *mutiiḥ*; pva *mutaaḥ*.

ت ى ر
تيّار *tayyaar* /n pl *-aat*/ **1** current (of water, air etc.). *xallii-k ɛaayim maɛa t-tayyaar* keeping swimming with the current! **2** *[elec]* current. *tayyaar mitɣayyar* alternating current. **3** trend, current of opinion. *bi-tɛabbar ɛan tayyaar* it expresses a trend.

ت ى ر ه
تيرو *tiiruh* <It *tiro*> /n pl *-aat*/ arena where the shooting of clays or pigeons is the object of betting.

ت ى ز
تيزة *teeza* <T *teyze*> /n/ *[obsol]* title of, and polite form of address to, an elderly woman, especially a relative.

ت ى س
تيس *tees* /n pl *tuyuus*/ **1** billy goat. **2** stolid fool, dolt. *filuus maɛa tyuus [prov]* it's oafs who have the money.
تيّس *tayyis* /vi/ to become stupefied. *ʕil-waaḥid tayyis baɛd il-ʕakl* one felt drugged after eating. - vn *tatyiis*; ava *mitayyis*.

ت ى ش see ت ى ج : *tiif, tiifa*

ت ى ف و د
تيفود *tayfuud* <prob Engl> /n/ typhoid fever.

ت ى ف و س
تيفوس *tayfuus* <prob Engl> /n/ typhus.

ت ى ك
تاك *taak (i)* /vi/ to wear out, become threadbare. - vn *tayakaan*; ava *taayik*.

ت ى ل
تيل *tiil* /n/ **1a** hemp. **1b** strong cloth made from hemp (used in particular for mattresses). **2** fibre. *tiil dibriyaaj [auto]* clutch disc of fibre. ‖*tiil il-faraamil* brake-pads. — /pl *ʕatyaal*/ **3** linen. ‖*firiiɣ tiil* tape-measure.
تيلة *tiila* /n/ **1** *[text]* staple. *quṭn[1] ṭawiil it-tiila* long-staple cotton. — /pl *tiyal*/ **2** layer of fibres (in a tyre). **3a** *[naut]* fore-lock. **3b** *[eng]* split pin.
¶ *bit-tiila* with great difficulty.
تيّل *tayyil* /vt/ to secure (a bolt or the like) with a forelock or split pin. - vn *tatyiil*; ava/pva *mitayyil*.

ت ى م [1]
تيّم *tayyim* /vt/ to enthral by love, infatuate. - vn *tatyiim*; ava *mitayyim*; pva *mutayyam*.
اتّيم *ʕittayyim* /vi/ to be or become enthralled by love, be or become filled with infatuation. - ava/iva *mittayyim*.

ت ى م [2]
تيم *tiim* <Engl> /n pl *ʕatyaam*/ **1** team (in football etc.). **2** round (in the shooting of pigeons or clays).

ت ى م و ر
تيمور *taymuur* <prop name *Taymur*>: *manga taymuur* large dark-green variety of mango. - also *timuur*.

ت ى ن
تين *tiin* (also *tiin barfuumi*) /coll n/ fig(s). ‖*tiin ʃooki* prickly pear(s) (Opuntia ficus indica). - *tiin il-fiil* great cardamom, black amomum (Amomum granum paradisi). - *tiin binɣaali* banyan.
تينة *tiina* /unit n, pl *-aat*/ a fig.

[1] (ت ى ه)
تيه *teeh[1]* /fem n, pl *-aat*/ third letter of the Arabic alphabet. - also *taa, taaʕ, tih*.
تيه *teeh[2], tiih* /n/ pride, haughtiness, self-assertion.
تيه *teeh[3]* <Engl> /n/ *[plumb]* T-joint.

[2] ت ى ه see ت و ه : *taayih*

ت ی و ن –
تیونینج *tiyuuning* <Engl> tuning. *dayra tiyuuning [elec]* tuning circuit.

ت ی ی ی ر
تیّیر *tayyeer* <Fr *tailleur*> /n pl *-aat/* woman's two-piece suit (jacket and skirt).

ث

ث ق ب see ت ق ب

ث ق ف see س ق ف [3]

ث ق ل see ت ق ل

ث ك ن see س ك ن [4]

ث ل ث see ت ل ت

ث ل ج see ت ل ج

ث ل م see ت ل م

ث م ر see س م ر [4]

ث م م see س م م [3]

ث م ن see ت م ن [1] and ت م ن [2]

ث ن ى see ت ن ى [1] and ت ن ى [2]

ث و ب [1] see ت و ب [3]

ث و ب [2] see س و ب

ث و ر see ت و ر and س و ر [1]

ث و م see ت و م [1]

ث و ى see ت و ى

ث ا ء see س ه

ث ء ب see ت و ب [2]

ث ء ت ك see س ء ت ك ى

ث ء ث ء
ثأثأ θaʕθaʕ /vi/ to lisp: -vn θaʕθaʕa; ava *miθaʕθaʕ*.

ث ء ر see ت ا ر [2]

ث ب ت see س ب ت [1]

ث خ ن see ت خ ن

ث ر ر see ص ر ر [2]

ث ر د see م ت ر د

ث ر و see س ر و [2]

ث ر ى see س ر ى [3]

ث ع ب see ت ع ب [2]

ث ع ل ب see ت ع ل ب

ث غ ر see س غ ر

ث ف ل see ت ف ل

ث ق see و س ق [2]

ج

ج ا see ج ى : *ga*

ج ا ج ا
جاجا *gaaga* /prop n/ jinni of guidance (invoked in spells and charms).

ج ا د
جاد *jaad* <Fr> /n/ jade.

ج ا ر see ج و ر : *gaar, gaara²*

(ج ا ز)
جاز *gaaz¹* <perh T *gaz* from Fr> /n/ paraffin, kerosene. *lambit gaaz* kerosene lamp.
جاز *jaaz* <Engl> /n/ jazz. *firqit jaaz* a jazz-band.

ج ا ن see ² ج ن ن : *gaan*

ج ا ه
جاه *gaah* /n/ honour, prestige, status. *la gaah wala maal yihimm-i-ni* neither status nor wealth interests me. ‖ *ya gaah in-nabi* exclamation of awe ≈ oh, wow! isn't that something!, as in *ya gaah in-nabi ɦittit ʕakla* oh, wow! what a meal! - *ʕana f-gaah in-nabi* ≈ I beseech you! - *ʕilaah-i w-ʕinta gaah-i* invocation to God for his aid in performing a task, as in *ʕilaah-i w-ʕinta gaah-i tkuun min in-nagɦiin* may God grant you success!

ج ا و
جاوه *gaawa* **1** /prop n/ Java. **2** *coll* n/ Javanese (people).
جاوى *gaawi* **1** /adj */ Javanese. *buxuur gaawi* benzoin. **2** /n/ *[bot]* styrax. ‖ *sabɣit il-gaawi* friar's balsam.

ج ا ى
جاى *gaay, gaay* <Copt> /interj/ help! ‖ *gaay ya huuh* help me! come to my aid!

ج ا ى ر
جاير *gaayir* <poss Fr *cahier*> /n/ standard size of paper 58 by 82 centimetres.

ج ء ر
جأّر *gaʔʕar* /vt/ to push, force. ‖ *gaʔʕar dimaaɣ-u fil-muʃkila l-ɣaayit ma ɦall-a-ha* he put his mind to the problem until he solved it. - ava *migaʔʕar*.
اتجأّر *ʕitgaʔʕar* or *ʕiggaʔʕar* /vi/ to be pushed, be forced. - iva *mitgaʔʕar*.
جائر *gaaʕir* /vi/ to object, resist, protest. *bi-yɦibb¹ ygaaʕir fil-faaqi wil-malyaan* he likes to argue whether he has a good reason or not. - vn *migaaʕra*; ava *migaaʕir*.
اتجائر *ʕitgaaʕir* or *ʕiggaaʕir* /vi/ **1** = *gaaʕir*. **2** (impersonal) passive of *gaaʕir*. *ɦatta taman waraqit il-busṭa kamaan yitgaaʕir fii* is there even to be an argument over the price of the stamp! - iva *mitgaaʕir*.

(ج ب ب)
جبّ *gibb* /n/ deep hole, pit. ‖ *wiqiɛ fi-gibb* he got into a difficult problem, he got in a fix.
جبّة *gibba* /n pl *-aat, gibab*/ buttonless long outer robe open down the front, worn by Muslim clergy and well-to-do villagers. ‖ *ɛads¹ b-gibba* unhulled lentils.
جبّة *gabba¹* <prob Copt> /n/ five-stones, jacks. - also *kabba*.

ج ب د
جبد *gabad (i)* /vt/ to seize hold of, grasp (especially with the hand). *gabad-ni min ṭooq-i* he seized me by the collar. *ɦasseet bi-ɦaaga gabadit-ni l-taɦt il-mayya* I felt something dragging me down under the water. - vn *gabd, gabadaan*; ava *gaabid*; pva *magbuud*.

جبّادة *gabbaada* /n pl *-aat*/ long-handled fruit-hook.
اتجبد *ʃitgabad* or *ʃiggabad* /vi/ to be seized, be grasped (especially with the hand). - iva *mitgibid*.
انجبد *ʃingabad* = *ʃitgabad*. - iva *mingibid*.

ج ب ر [1]
جبر *gabar[1] (u)* /vt/ **1** to set (broken bones). *ʃil-migabbaraati gabar ʕaḍmit diraaʕ-i* the bone-setter set the bone of my arm. **2** to round up to a whole unit. *ʕumr-u-hum ma gabaru ksuur il-gineeh* they never round a sum of money up to a pound (when they're going to give it to someone). **3** (also *gabar xaaṭir* and *gabar bi-xaaṭir*) **3a** to soothe (s.o.'s feelings) with a kind word or deed, treat (s.o.) charitably, help out (s.o. in distress). *da kaan raagil ʁalbaan w-ana gabart[i] xaṭr-u* that man was in a bad way and I helped him. **3b** to bribe. *miʃ raaḍi ymaffi l-waraq - yimkin yikuun ʕayz-ak tugbur bi-xaṭr-u* he's not prepared to finish with the papers - perhaps he wants you to give him something. — /vi/ **4** to sell out. *lissa ma-gabarnaa-ʃ* we still haven't run out. *ʃil-burtuqaan gabar* (1) the oranges are sold out. (2) the oranges are finished. ‖*da kaan zamaan wi-gabar* that was in the old days, that's past history. **5** to recover, get over a crisis. - vn *gabr, gubraan, gubraniyya*; ava *gaabir*; pva *magbuur*.
جبر *gabr* **1** /vn/ ‖*gabr il-baḥr* see *xaliig*. **2** /n/ *ʃil-gabr* algebra.
جابر *gaabir* /n/ **1** male given name. **2** Healer (epithet of God). ‖*ya gaabir* cry of the vendor of cooked offal.
جبارة *gubaara, gibaara↓* /n pl *-aat, gabaayir*/ splint.
جبيرة *gibiira, gabiira* /n pl *gabaayir*/ splint.
اتجبر *ʃitgabar[1]* or *ʃiggabar[1]* /vi/ passive of *gabar[1]*. - iva *mitgibir*.
انجبر *ʃingabar[1]* = *ʃitgabar[1]*. - iva *mingibir*.
جبّر *gabbar* /vt/ to set (broken bones). - vn *tagbiir*; ava/ pva *migabbar*.
مجبّر *migabbar* /n */ bone-setter.
مجبّراتي *migabbaraati* /n pl *-yya*/ bonesetter.
اتجبّر *ʃitgabbar[1]* or *ʃiggabbar[1]* /vi/ to be set correctly (of broken bones). - iva *mitgabbar*.

ج ب ر [2]
جبر *gabar[2] (i)* /vt/ to force, compel. *gabar-ni ʕal-maʃy* he forced me to walk. - vn *gabr*; ava *gaabir*; pva *magbuur*.
جبري *gabri* /adj/ compulsory. *ʃit-tasʕiira l-gabriyya* the compulsory fixed price.
جبر *gubr* /n/ **1** cruelty. *ʃeeh ig-gubr[i] da ḍarb-ak lu ma-ykun-ʃ[i] bif-ʃakl[i] da* how cruel! you shouldn't beat him like that! **2** insolence. *ya gubr-a-ha lamma tqabbaḥ maʕa gran-ha* what a nerve she has to call her neighbours bad names!
جبروت *gabaruut* /n/ **1** omnipotence, might. **2** source of all authority (one of the five parts of the Sufi cosmos).
جبّار *gabbaar* /adj/ **1** /pl *gababra*/ colossal, huge. *ʕimaara gabbaara* an enormous building. *riggaala gababra* huge men. **2** /pl *-iin*/ ruthless, despotic. *riggaala gabbariin* ruthless men. *kullu zii ʕaahatin gabbaar [prov]* every person with a physical defect has a cruel streak. — /n/ **3** Omnipotent One (epithet of God).
جبايري *gabaayir* /pl n/ high and mighty behaviour. *(ya ʕeen-ak) ya gabayr-ak* what a nerve you've got!
اتجبر *ʃitgabar[2]* or *ʃiggabar[2]* /vi/ to be forced, be compelled. - iva *mitgibir*.
انجبر *ʃingabar[2]* = *ʃitgabar*. - iva *mingibir*.
اتجبّر *ʃitgabbar[2]* or *ʃiggabbar[2]* /vi/ to behave ruthlessly. - vn *tagabbur↑*; ava *mitgabbar, mutagabbir↑*.
أجبر *ʔagbar↑* = *gabar[2]*. - vn *ʃigbaar*; ava *mugbir↑*; pva *mugbar*.
إجباري *ʃigbaari* /adj/ compulsory. *taʃmiin ʃigbaari* compulsory insurance.

ج ب ر د –
جبردين *gabardiin, gibardiin* <Engl> /n/ gabardine.

ج ب ر ي ل
جبريل *gibriil* (also *gibriin↓*) /prop n/ **1** male given name. **2** the archangel Gabriel (in Islamic belief, the angel mediating divine inspiration).

ج ب ر ي ن see ج ب ر ي ل : *gibriin*

ج ب ر ي ه
جبريه *gabariih* <Fr *gabarit*> /n pl *-aat*/ model (in naval architecture).

ج ب س
جبس *gibis (a)* /vi/ to stiffen, thicken (of dough, paste etc.). - vn *gabasaan*; ava *gaabis*.
جبس *gibs* /n/ **1** plaster. **2** gypsum, plaster of Paris.
جبّاسة *gabbaasa* /n pl *-aat*/ gypsum works, limestone works.
جبّس *gabbis* /vt/ **1** to put plaster on. *gabbisuu-lu rigl-u* they put his leg in plaster. **2** to cause (e.g., dough) to thicken or stiffen. — /vi/ **3** to stiffen, harden, set. *ḍiif lil-maʕguun fiwayyit zeet ʃaḥsan yigabbis* add a little oil to the putty or it may get too hard to use. ‖*muxx-u gabbis* ≈ his mind seized up. - vn *tagbiis*; ava/pva *migabbis*.

اتجبّس ʃitgabbis or ʃiggabbis /vi/ passive of *gabbis*. - iva *mitgabbis*.

ج ب ل [1]
جبل *gabal* /n/ **1** /pl *gibaal*/ hill, mountain. *gibaal ik-kuḥl[i] tifnii-ha l-maraawid [prov]* ((even) mountains of kohl are worn away by kohl-probes) ≈ water wears away a stone. **2** /no pl/ arid desert land (as opposed to cultivated land).
جبلاية *gabalaaya* /n pl *-aat*/ (man-made) mound or hillock, rockery.
جبلي *gabali* /adj/ **1** arid and hilly. **2** mountainous. ‖ *ʃaraanib gabali* hares.

ج ب ل [2]
جبلّة *gibilla* /n pl *-aat*/ *[abus]* natural disposition. *raagil gibillit-u waṭya* a base-natured man.

ج ب ل ا ن
جوبلان *gublaan* <Fr *les Gobelins*> /n/ Gobelin tapestry, (also loosely) machine-woven tapestry used for upholstery.

ج ب ن [1]
جبنة *gibna* /n pl *giban*/ cheese.
جبّن *gabbin* **1** /vt/ to make into cheese. **2** /vi/ to curdle (of milk). - vn *tagbiin*; ava/pva *migabbin*.
اتجبّن ʃitgabbin or ʃiggabbin /vi/ to be made into cheese. - iva *mitgabbin*.

ج ب ن [2]
جبن *gabun, gubun, gibin (u, i)* /vi/ to become cowardly. - vn *gubn*.
جبن *gubn* /n/ cowardice.
أجبن ʃagban /el/ more/most cowardly. *ʃagban min il-gubn* more cowardly than cowardice itself.
جبان *gabaan* /n pl *gubana, gabanaat*/ coward.
استجبن ʃistagbin /vt/ **1** to consider cowardly. **2** to select for cowardliness. — /vi/ **3** to act in a mean way. - vn *ʃistigbaan*; ava/pva *mistagbin*.

ج ب ن [3]
جبين *gibiin* /n pl *gibína*/ forehead, brow. *min ɛaraq gibiin-i* with the sweat of my brow, by my own efforts. ‖ *ʃilli maktuub ɛag-gibiin laazim tifuuf-u l-ɛeen [prov]* ≈ what is destined will be fulfilled.
جبّانة *gabbaana* /n pl *-aat*/ cemetery.

ج ب ن ي
جبنيوت *gabanyoot* <Copt> /n/ *[Chr]* **1** Pater Noster. **2** formal registration of betrothal, and the accompanying ceremony.

ج ب ه
جبه *gabah (a)* /vt/ to confront (s.o.) in such a way as to embarrass. *ʃana magbuuh minkum* I am too embarrassed to face you. - ava *gaabih*; pva *magbuuh*.
جبهة *gabha* /n/ **1** /pl *-aat*/ front (in war). **2** /pl *gibaah*/ forehead, brow.
اتجبه ʃitgabah or ʃiggabah /vi/ to be caused embarrassment (by confrontation with s.o. or s.th.). - iva *mitgibih*.
جابه *gaabih* /vt/ to face, confront. *laazim nigabh-u bil-ḥaqiiqa* we must confront him with the truth. *da gabaan ma-yiqdar-f[i] ygaabih ʃayy[i] muʃkila* he is too cowardly to face any problem.
اتجابه ʃitgaabih or ʃiggaabih /vi/ to be confronted (with s.th.). - iva *mitgaabih*.

ج ب ي [1]
جبّى *gabba[2]* /vi/ to spend money (on s.o.) in order to gain influence. *ʃaṣrif filuus-i zayy[i] ma-na ɛaayiz - huwwa bi-ygabbi ɛalayya* I'll spend my money just as I choose - does he support me (and so have a right to interfere)? - ava *migabbi*.
اتجبّى ʃitgabba or ʃiggabba /vi/ **1** = *gabba[2]*. **2** (impersonal) passive of *gabba[2]*. *ʃiḥna miʃ min illi yitgabba ɛaleehum* we're not the type of people to live off others! - ava/iva *mitgabbi*.

ج ب ى [2]
جبية *gubya* /n pl *gubay*/ *[rur]* fish snare.

ج ت ا ر
جتار *gitaar* <prob Fr> /n pl *-aat*/ guitar.

ج ت ت
جتة، جتّة *gitta* /n pl *gitat*/ (human) body. *rama* (or *laqqaḥ*) *gittit-(u) ɛala* to be a nuisance to, impose oneself upon, force one's attention upon, as in *faḥḥaat raami gittit-u ɛaleek* a beggar imposing himself on you. ‖ *ʃallaah la yirmii-lak gitta f-ʃarḍ [beggars]* may God not cast any of your family to earth! - *da gitta [deris]* ≈ he's very well built! - *bi-yinhaʃu f-gittit-i* they talk savagely about me behind my back.
جثّة *gussa* /n pl *gusas*/ corpse.

ج ت ر
جتر *gitir, gitr* <prob Fr *guêtre*> /n pl *gitar*/ *[mil]* pair of gaiters.

ج ت و ه
جاتوه *gatooh* <Fr *gâteau*> /coll n/ pastries, small cake(s).
جاتوهاية *gatohaaya* /unit n, pl *gatohaat, gatohayaat*/ a pastry, a small cake.

ج ث ث see ج ت ت

ج ح ا
جحا، جحى *guḥa* /prop n/ Goha, a character in folk stories, renowned for his direct, simplistic and shrewd approach to life. ‖*musmaar guḥa* pretext, excuse for keeping one's foot in the door. - *beet guḥa* maze, labyrinth. - *huwwa guḥa ʕakbar walla-bn-u* ≈ who are you trying to kid? I wasn't born yesterday. - *guḥa ʕawla b-laḥm[i] toor-u [prov]* one has first claim on one's own possessions. - *ʔaalu ya guḥa ʒidd[i] moog il-baḥr.* - *ʔaal il-gayyaat ʕaktar mir-rayḥaat [prov]* ≈ future opportunities outnumber those in the past, there will always be a chance to get even.

ج ح د
جحد *gaḥad (i, a)* **1** /vt/ to receive with ingratitude. *gaḥad niʒmit rabb-u* he was ungrateful for God's goodness. **2** /vi/ to become callous, become insensitive. - vn *guḥd, gaḥd, guḥuud*; ava *gaaḥid*; pva *magḥuud*.
جحود *gaḥuud* /adj * / ungrateful.
اتجحد *ʕitgaḥad* or *ʕiggaḥad* /vi/ to be received with ingratitude. - iva *mitgiḥid*.
انجحد *ʕingaḥad* = *ʕitgaḥad*. - iva *mingiḥid*.

ج ح ر
جحر *gaḥar (u, a)* /vt/ to bury (s.o.) in a hole. *ʕallaah yigḥar rooḥ-u maṭraḥ ma raaḥ* ≈ may he roast in hell! - vn *gaḥr*; ava *gaaḥir*; pva *magḥuur*.
جحر *guḥr* /n pl *guḥuur, giḥaar*/ burrow, hole (of an animal). *guḥr[i] fraan* rat hole. ‖*guḥr[i] diib yikaffi miyya w-miit ḥabiib [prov]* there will always be room in one's home for a friend.
اتجحر *ʕitgaḥar* or *ʕiggaḥar* /vi/ passive of *gaḥar*. *ʕahu-tgaḥar fi-sittiin dahya* ≈ he went to the devil! thank God we got rid of him! - iva *mitgiḥir*.
انجحر *ʕingaḥar* = *ʕitgaḥar*. - iva *mingiḥir*.
جحّر *gaḥḥar* /vi/ to stare wide-eyed. *maa-lak bi-tgaḥḥar-li kida b-ʒenee-k* what are you staring at me like that for? - vn *tagḥiir*; ava *migaḥḥar*.

ج ح ش
جحش *gaḥʃ* /n pl *guḥuuʃ, guḥúʃa*/ young donkey. ‖*ʕin kunt[i] f-balad yuʒbudu g-gaḥʃ[i] ḥiʃʃ[i] wi-ddii-lu [prov]* ≈ when in Rome do as the Romans do. - *wala fiif gaḥʃ[i] yuxrug minha b-bardaʒt-u* ≈ it's a very tight spot indeed.
جحّش *gaḥḥaʃ* /vi/ to behave brusquely. - vn *tagḥiiʃ*; ava *migaḥḥaʃ*.
جاحش *gaaḥiʃ* /vi/ to behave defiantly. *ya ḥmaar ya ʁabi baṭṭal tigaaḥiʃ maʒa lli ʕakbar minnak* you stupid ass, stop defying your elders! - vn *migaḥʃa*; ava *migaaḥiʃ*.

ج ح م
جحم *gaḥam (i)* **1** /vt/ to send to hell. *dahya tigḥim-u* may a disaster cast him into hell! **2** /vi/ to stare (at s.o. or s.th.) in envy, put the evil eye (on s.o. or s.th.). *min saaʒit ma ʒen-ha gaḥamit fil-waad raʔad ʒayyaan* the moment she set her evil eye on the boy he fell ill. - vn *gaḥm*; ava *gaaḥim*; pva *magḥuum*.
جحمة *gaḥma* instance noun of *gaḥm*. *gaḥma taxd-u* to hell with him!
جحيم *gaḥiim* /n/ hell, hellfire. *ʕana ʒaayiʃ fi-gaḥiim* I'm living in hell.
اتجحم *ʕitgaḥam* or *ʕiggaḥam* /vi/ to go to hell, die (of an enemy). - iva *mitgiḥim*.
انجحم *ʕingaḥam* = *ʕitgaḥam*. - iva *mingiḥim*.
جحّم *gaḥḥam* /vi/ to stare in fury, envy or hatred. *bi-ygaḥḥam-li b-ʒenee ka-ʕinn[i] ḥa-yiftiris-ni* he stares at me as if he were going to devour me. - vn *tagḥiim*; ava *migaḥḥam*.

ج ح ظ
جحظ *gaḥaẓ↑ (a)* /vi/ to bulge, protrude (of the eyes). *ʒenee-ha gaḥaẓit lamma ʔarraṭ il-ḥabl[i] ḥawaleen raʔabit-ha* her eyes bulged as the rope tightened round her neck. - vn *guḥuuẓ*; ava *gaaḥiẓ*.

ج خ خ
جخ *gaxx (u, i)* /vi/ **1** to spin a yarn, tell tall stories. **2** to squirt. - vn *gaxx, gaxaxaan*; ava *gaaxix*.
جخّاخ *gaxxaax* /n * and pl *gaxxaaxa*/ fibber, hot-air merchant.
اتجخ *ʕitgaxx* or *ʕiggaxx* /vi/ (impersonal) passive of *gaxx*. *ʕahu itgaxx[a] ʒaleek* there you are - you've been led up the garden path! - iva *mitgaxx*.
انجخ *ʕingaxx* = *ʕitgaxx*. - iva *mingaxx*.

ج د د[1]
جدّ *gadd[1] (i)* /vi/ to occur newly. *gaddit ẓuruuf* things came up unexpectedly. *gaddit ʒaleehum sarwa* they suddenly came into money. *ḥa-ygidd[a] ʒaleek naas*

you'll come across new people. *ma-gadd^{i}-f ʕaleeha ḥaaga* she is still the same, she is not likely to change or improve. - vn *gadadaan*; ava *gaadid*.

جديد *gidiid* /adj pl *gudaad*/ **1** new. *xad ʔamiiṣ gidiid* he took a new shirt. -/adverbially/ *lissa mitʕayyina gdiid* she's just newly appointed. ‖*gidiid lang* brand-new. -*gidiid fi-gidiid* all new, as in *labsiin gidiid fi-gidiid ʕafaan il-ʕiid* wearing completely new clothes for the feast. -*yoom tamanya fil-gidiid* the eighth of next month. **2** different. *dawwar-lak ʕala waẓiifa gdiida* find yourself a different job. — /n/ **3** *[obsol]* one fortieth of a piastre; coin one fortieth of a piastre in value.

¶ *min gidiid* /adv/ anew, again. *min ʔawwil wi-gdiid* anew, all over again.

أجدد *ʔagdad* /el/ newer/newest.

أجدّ *ʔagadd* = *ʔagdad*.

جدّد *gaddid* /vt/ **1** to renew. *laazim ʔagaddid ruxṣit is-siwaaqa* I must renew my driving licence. **2** to renovate, restore. *tagdiid il-ʔasaar il-ʔislamiyya* the renovation of Islamic monuments. **3** to reconstitute. **4a** to extemporize (within the structure of a song). **4b** to innovate (in art). - vn *tagdiid*; ava/pva *migaddid*.

تجديدات *tagdidaat* /pl n/ innovations, renovations.

اتجدّد *ʔitgaddid* or *ʔiggaddid* /vi/ **1** to be renewed. **2** to be renovated, be restored. **3** to be reconstituted. - iva *mitgaddid*.

استجدّ *ʔistagadd* /vi/ **1** to occur newly. *li-ɣaayit ma tistagadd^{a} ḥaaga tanya* until something else crops up. **2** to be newly arrived (in employment etc.). - vn *ʔistigdaad*; ava *mustagidd, mustagadd*.

استجدد *ʔistagdid* /vt/ **1** to select for newness. **2** to consider new. - ava *mistagdid*.

ج د د 2

جدّ *gadd^{2} (i)* /vi/ to strive, try hard. *min gadd^{i} wagad [prov]* he who strives will find his reward. *ma-huu-ʃ gaadd^{i} f-ʕamal-u* he makes no real effort in his work. - vn *gidd, gadd*; ava *gaadd^{i}, gadd*.

جدّ *gadd^{3}* **1** /n/ earnestness, seriousness. *bi-yitkallim kitiir wi-lamma yiigi g-gadd^{i}* (or *lig-gadd^{i}* or *fig-gadd^{i}*) *ma-yiʕmil-ʃ^{i} ḥaaga* he talks a lot but when it really comes to action he doesn't do a thing. **2** /adj invar/ earnest, serious. *sitt^{i} gadd* a serious-minded woman. *ʔiftaɣalu fuɣl^{i} gadd* they worked very hard. ‖*ʔalabuu-ha gadd* (after talking light-heartedly) they became argumentative. -/adverbially/ *b-akkallim gadd* I mean what I say, I'm speaking in earnest.

¶ *bi-gadd* or *min gadd* /adv/ seriously, in earnest. *ʔinta b-titkallim bi-gadd* do you really mean what you say?

جدّا *giddan* /adv/ **1** very. *gaayiz giddan* it's very possible. *da ɣariib giddan* this is very strange. ‖*taqdiir gayyid giddan [acad]* ranking of Very Good (between Excellent and Good). **2** very much. *ʔid-dawa nafaʕ-ni giddan* the medicine benefited me very much.

جدّى *giddi* /adj/ serious.

جدّيّة *giddiyya* /n/ seriousness, gravity. *bi-(kull^{i}) giddiyya* earnestly, seriously. *miʃ baayin ʕalee waaxid il-mawḍuuʕ bi-giddiyya* he does not seem to be taking the matter seriously.

ج د د 3

جدّ *gidd* /n/ **1** /pl *guduud*/ grandfather. *ʔabu gidd-i* my great-grandfather. ‖*ʔabban ʕan gidd* from generation to generation. **2** /pl *ʔagdaad*/ ancestor, forefather.

جدّة *gidda* /n pl *-aat*/ grandmother.

ج د د 4

جدّة *gadda* /prop n/ Jeddah.

ج د ر 1

جدارة *gadaara* /n/ worth, worthiness. *bi-gadaara* deservedly. *faaz ʕan* (or *bi-*) *gadaara* (1) he deserved his success. (2) he had a comfortable win.

جدير *gadiir* /adj */ worthy, deserving.

أجدر *ʔagdar* /el/ worthier/worthiest, more/most deserving, more/most appropriate. *ʔana ʔagdar minnak big-gayza* I deserve the prize more than you. *ʔagdar-lak tibiiʕ-u* you'd do best to sell it.

ج د ر 2

جدرى *gudari* /n/ smallpox. ‖*gudari mayya* or *gudari kaadib* chicken pox.

جديرى *gudeeri* /n/ chicken pox.

جدّر *gaddar^{1}* /vi/ to be afflicted with pox. - vn *tagdiir*; ava *migaddar*.

مجدّرة *migaddara* /n/ dish of rice, lentils and onions (more often called *kufari*).

ج د ر 3

جدار *gidaar, gadaar* /n pl *gudraan, gidaraat*/ wall.

جدّر *gaddar^{2}* /vt/ to make a foundation for. *biyuut il-manṭiqa kull-a-ha mgaddara bil-ḥagar ig-giiri* all the houses in the area are built on a limestone foundation. - vn *tagdiir*; ava/pva *migaddar*.

اتجدّر *ʔitgaddar* or *ʔiggaddar* /vi/ passive of *gaddar*. - iva *mitgaddar*.

ج د ر 4

جذر *gaẓr, giẓr^{i}* /n pl *guẓuur*/ *[math]* root. *gaẓr^{i} tarbiiʕi*

a square root. *gazr[1] takʕiibi* a cube root.

جذر *gidr, gizr[2]↑* /n pl *guduur, guzuur/* **1** root. *gidr is-sinna* the root of the tooth. ‖*min gidr[1] ṭayyib* of good stock. -*qaṭaʕ gidr(-u)* he eliminated (him), he extirpated (him). -*gabit-u ʕala gduur raqabt-u* (1) she threw him flat on the ground. (2) she made him fall hopelessly in love with her. **2** emerald matrix (sold as a semi-precious stone). **3** *[coarse slang]* penis, prick. -also *gidl*.

جذر *gizr[3]* /n pl *guzuur/* **1** basis, root, origin. *ʔil-mas ʔala laha guzuur min zamaan* the question has its roots in the past. **2** *[ling]* (Arabic) root.

جذّر، جذّر *gaddar[3]* /vi/ to become firmly rooted (of a plant). -vn *tagdiir*; ava *migaddar*.

ج د ع

جدع، جذع *gadaʕ* /n pl *gidʕaan/* **1** /occasionally fem *gadaʕa/* one possessed of one or more of the following groups of characteristics: (1) nobility of character and integrity. *ʈiliʕ gadaʕ maʕaana w-qaam bil-waagib kull-u* he turned out to be a gentleman in his dealings with us and did all he could. (2) intelligence and application. *huwwa gadaʕ qawi f-fuxl-u* he's very good at his job. (3) manly toughness and courage. *xallii-k gadaʕ - ḥa-txaaf min fiwayyit ʕiyaal* be a man! are you going to be scared by a few kids? **2** fellow, (young) man. *ya gadaʕ* informal (and sometimes somewhat reproachful) form of address to a (usually younger) man ≈ my man! my lad! see further under ج د ع ن

جذعة، جدعة *gadaʕa* /n pl *-aat/ [rur]* young she-goat.

أجدع *ʔagdaʕ* /el/ **1** more/most possessed of the qualities of a *gadaʕ*. **2↓** better/best. *ʔahu l-qizaaza di ʔagdaʕ min illi qabl-a-ha* this bottle is definitely better than the one before.

مجدع *magdaʕ↓* /adj invar/ having the qualities of a *gadaʕ*. *dool ʔawlaad magdaʕ bi-ṣaḥiih* there are real men.

مجدعة *magdaʕa* /n/ quality of being a *gadaʕ*.

استجدع *ʔistagdaʕ* /vt/ **1** to select for being a *gadaʕ*. *ʕafaan tixawwif-hum istagdaʕ-lak waaḥid minhum wi-ḍrab-u* if you want to frighten them, get hold of one of their toughs and give him a beating. **2↓** to select for high quality. *ʔistagdaʕ qumaaʃ wi-faṣṣal-li minnu* choose some good-quality cloth and make it up for me. — /vi/ **3** to behave like a *gadaʕ*. *ʔistagdaʕ baqa w-haat illi ʕaleek* be a man and pay me what you owe! -vn *ʔistigdaaʕ*; ava *mistagdaʕ*.

ج د ع ن see also ج د ع

جدعنة *gadʕana* /n/ quality of being a *gadaʕ*.

اتجدعن *ʔitgadʕan* or *ʔiggadʕan* /vi/ **1** to behave in the manner of a *gadaʕ*. **2** to get a move on. *laazim yitgadʕan fiwayya f-fuxl-u* he must get a bit of a move on in his work. -vn *gadʕana*; ava *mitgadʕan*.

ج د ف

مجداف، مجذاف *migdaaf, mugdaaf* /n pl *magadiif/* oar. ‖*kassar magadiif(-u)* ≈ to discourage (s.o), take the wind out of (s.o.'s) sails. -also *muqdaaf*.

جدّف، جذّف *gaddif* /vi/ **1** to row. *gihaaz tagdiif* rowing-exercise apparatus. **2** /vi/ *[Chr]* to blaspheme. *ya weel illi ygaddifu ʕala rabb-i-na* woe to those who abuse God!. -vn *tagdiif*; ava *migaddif, mugaddif↑*.

ج د ل [1]

جدل *gadal[1] (i)* /vt/ to braid, plait, twist. -vn *gadl, gadalaan*; ava *gaadil*; pva *magduul*.

جدلة *gadla* /n pl *-aat/* **1** instance noun of *gadl*. **2** plait (of rope).

مجدول *magduul* /coll n/ ashlar.

مجدولة *magduula* /unit n, pl *magadiil/* an ashlar (usually standardized at one metre square).

جديلة *gidiila* /n pl *gadaayil/* braid, plait. *gaabit baruuka b-gadaayil* she got a wig with braids.

اتجدل *ʔitgadal* or *ʔiggadal* /vi/ to be braided, be plaited. -iva *mitgidil*.

جدّل *gaddil* /vt/ to braid, plait, twist (particularly rope). -vn *tagdiil*; ava/pva *migaddil*.

اتجدّل *ʔitgaddil* or *ʔiggaddil* /vi/ to be braided, be plaited, be twisted. -iva *mitgaddil*.

ج د ل [2]

جدل *gadal[2]↑* /n/ debate, controversy, argument, dispute. *ʕumr-u ma-yḥibb il-gadal maʕa mraat-u* he never likes to argue with his wife.

¶ *gadalan* /adv/ for the sake of argument. *nifriḍ gadalan ʔinn il-kalam-da ṣaḥiih* let us suppose just for the sake of argument that what is said is true.

جادل *gaadil* **1** /vt/ to argue with, dispute with. *ma-tgadil-nii-ʃ* don't argue with me! **2** /vi/ to discuss, argue. *fiḍil yigaadil maʕaaya* he went on arguing with me. ‖*yigaadil fil-baaṭil* to argue just for the sake of arguing. -vn *migadla, mugadla, gidaal*; ava *migaadil*.

مجادلة *mugadla* /n pl *-aat/* debate, controversy, dispute.

اتجادل *ʔitgaadil* or *ʔiggaadil* /vi/ **1** to argue. **2** to be argued with. -ava/iva *mitgaadil*.

ج د ل [3]

جدل *gadal[3] (i)* /vt/ to transplant. -vn *gadl*; ava *gaadil*; pva *magduul*.

جدل *gidl* /n pl *guduul*/ root. *li-ʁaayit ma f-fatl*^{i} *yiqrab guduul* until the seedling puts down roots. - also *gizr, gidr*.
اتجدل *ʕitgadal* or *ʕiggadal* /vi/ **1** to be transplanted. **2** to get established, put down roots (of a plant). *ʕif-fital bi-titgidil il-ʕawwil fil-maʃtal* first the seedlings get established in a nursery. **3** *[abus]* to settle down, establish oneself. *ʕitgidil fi-maṭraḥ-ak* keep still, don't move! - ava/iva *mitgidil*.

ج د ل^{4} see ج د ل^{1}: *gaddaal*

ج د و ل
جدول *gadwal* /n pl *gadaawil*/ **1** chart, list. *gadwal ʕaʁmaal* agenda. **2** schedule, timetable. **3** table (arithmetical, logarithmic, statistical etc.). **4** *[print]* column.
جدول *gadwil* /vt/ to schedule, list. *laazim nigadwil tafaṣiil if-fuxl* we should make a list of the work details. *ʁayziin nigadwil diyun-na* we want to fix dates for (repaying) our debts. - vn *gadwala*; ava/pva *migadwil*.
مجدول *migadwil* /pva/ ‖ *ʁuqda mgadwila [naut]* carrick bend.
اتجدول *ʕitgadwil* or *ʕiggadwil* /vi/ to be scheduled, be listed. - vn *tigadwiil*; iva *mitgadwil*.

ج د و ن
جادون *gaduun, gadoon* <Fr *guidon*> /n pl *-aat, gawadiin*/ handlebar (of a bicycle).

ج د ى
جدى *gidy* /n pl *gidyaan*/ young goat, kid.
الجدى *ʔil-gady* /n/ *[astrol]* Capricorn. *madaar il-gady* the Tropic of Capricorn.

ج ذ ب see ج ز ب

ج ذ ر see ج د ر^{4}

ج ذ ع see ج د ع and ج ز ع^{4}

ج ذ ف see ج د ف

ج ذ م see ج ز م^{3}

ج ر اج see ج ر ش^{2}: *garaaj*

ج ر اش see ج ر ش^{2}: *garaaf*

ج ر ام
جرام *giraam* <Fr> /n pl *-aat*/ gramme.

ج ر ء^{1}
جرىء *garii*ʕ /adj * and pl *guraʕal* **1** audacious, courageous, daring. **2** impudent, cheeky.
أجرأ *ʔagraʕ* /el/ more/most audacious.
اتجرّأ *ʕitgarraʕ* or *ʕiggarraʕ* /vi/ to dare, have the courage. *ḥa-titgarraʕ tiḥuṭṭ*^{i} *ʕimḍit-ak ʁaleeha* will you dare to sign it? - ava *mitgarraʕ*.
اتجارأ *ʕitgaaraʕ* or *ʕiggaaraʕ* /vi/ to dare. *ʕitgaaraʕ wi-daxal yinadii* he summoned up his courage and went in to call him. - ava *mitgaaraʕ*.
استجرى *ʕistagra* /vi/ to dare (usually negative or in contexts of challenging). *ma-yistagraa-ʃ* he wouldn't dare! *tistagri tkallim-ni kida* do you have the nerve to talk to me like that?! - ava *mistagri*.
استجرأ *ʕistagraʕ* /vt/ to select for courage. *ʕistagraʕ-lak waaḥid yiquum bil-ʁamaliyya* find a brave man to do the job. - vn *ʕistigraaʕ*; ava/pva *mistagraʕ*.

ج ر ء^{2} see ج ر ى^{1}: *ʕigraaʕ, ʕigraaʕi*

ج ر ب^{1}
جرّب *garrab*^{I} /vt/ **1a** to try out, test. *garrab faraamil il-ʁarabiyya* he tried out the car brakes. **1b** *[Chr]* to tempt, put to the test. *ʕif-fiṭaan bi-ygarrab-na* the devil tempts us. **2** to experience, go through. *yaama ʕ-waaḥid garrab* one has been through a lot. ‖ *ʕisʕal migarrab wala tisʕal ṭabiib [prov]* (seek the advice of the one who has experienced (an illness) rather than that of the doctor) ≈ experience counts for more than theories. - vn *tagriib*; ava/pva *migarrab*.
تجريبى *tagriibi* /adj/ experimental. *ʁaara tagribiyya* test raid, practice raid.
تجربة *tagriba* or *tagruba* /n pl *-aat, tagaarib*/ **1a** test, experiment. *taḥt it-tagriba* (1) undergoing trials. (2) on a trial basis. ‖ *ʕit-tagriba xayru burhaan* ≈ the proof of the pudding is in the eating. **1b** *[Chr]* trial, temptation. **2** experience.
اتجرّب *ʕitgarrab* or *ʕiggarrab* /vi/ passive of *garrab*. - iva *mitgarrab*.

ج ر ب^{2}
جرب *girib (a)* /vi/ **1** to become mangy. **2** to become shabby or mangy-looking. *ʃakl-u garbaan* his appearance is disgusting. **3** to become faded or washed-out (of colour). - vn *garab, garabaan*; ava *garbaan*.
جرب *garab* /n/ scabies, mange.
جربان *garbaan* /adj */ **1** *[path]* mangy. **2** shabby, disgusting in appearance. **3** faded, drab (of colour).
جربة *garba* /n pl *-aat*/ mange, itch.
جربة *garaba* /adj invar/ like a sore, disgusting. *ʕinta*

been ʃixwaan-ak garaba you are a disgrace to your friends! *ʃibʕid ʕan in-naas ig-garaba dool* stay away from these revolting people!

أجرب *ʃagrab* /adj, fem *garba*, pl *gurb*/ **1** mangy. **2** faded, drab (of colour).

جرّب *garrab*[2] /vi/ to become mangy. - ava *migarrab*.

اجرّب *ʃigrabb* /vi/ **1** to become mangy. **2** to become faded or washed-out (colours). - ava *migribb*.

ج ر ب[3]

جراب *giraab* /n pl *girʃba, girabaat*/ **1a** sheath, scabbard. **1b** holster. **2** small bag or pouch (usually of leather). ‖*ħaṭṭ*[i] *raas-u fig-giraab* he was rendered harmless (like a snake in a conjurer's bag). - *yaama fig-giraab ya ħaawi [prov]* (how much you have in your bag, conjurer!) ≈ the world is full of surprises. **3** flap of a *ʂiwaan* (q.v.).

ج ر ب[4] see ج ر و ب: *guruub*

ج ر ب ّ

جروبّي *gurubbi* /prop n/ **1** Groppi's, a well-known coffee-house and restaurant company with two branches in downtown Cairo. **2** /coll n/ (Groppi) ice cream(s).

ج ر ب ب -

جريبفروت *giribbifruut, giribfiruut* <Engl> /coll n/ grapefruit(s). - also *giriffiruut*.

جريبّ *giribb* = *giribbifruut*.

ج ر ب ع

جربوع *garbuuʕ, garbuuʕ* /n pl *garabiiʕ, garabiiʕ*/ **1** desert rat, jerboa. **2** *[abus]* low despicable vagabond, trashy good-for-nothing.

جربعة *garbaʕa* /n/ loafing, vagabondage, bumming around. *baṭṭal garbaʕa fiʃ-ʃawaariʕ* stop roving about the streets!

مجربع *migarbaʕ, migarbaʕ* /adj */ *[abus]* low and despicable.

اتجربع *ʃitgarbaʕ* or *ʃiggarbaʕ* /vi/ to become a vagabond. *ʃil-waad itgarbaʕ min yoom ma maat ʃabuu* the lad became a complete good-for-nothing when his father died. - vn *tigarbiiʕ*; iva *mitgarbaʕ*.

ج ر ب ك س

جيربوكس *girbuks, garabuks* <Engl> /n pl *-aat*/ gear-box.

ج ر ب ن د

جربندّية *garabandiyya* <P *châr-bandî*> /n pl *-aat*/ **1** knapsack. **2** game-bag.

ج ر ث م see ج ر س م

ج ر ج ت ت

جورجيت *jurjitt* (also *kiribb*[i] *jurjitt*) <Fr> /n/ georgette, a matt crepe of sheer silk or rayon.

ج ر ج ر[1]

جرجر *gargar* /vt/ to drag, pull, draw. *gargar-ni lil-ʂism* he dragged me to the police station. *bi-ygargar-na lil-ʃasʃila ʂ-ʂaʕba* he draws us on to the difficult questions. - vn *gargara*; ava/pva *migargar*.

مجرجر *migargar* /n pl *-aat*/ *[obsol]* long trailing overgarment worn by women of the lower classes on dressy occasions.

جرجار *girgaar* /adj */ troublesome, provoking quarrels or schisms.

اتجرجر *ʃitgargar* or *ʃiggargar* /vi/ to be dragged, be pulled. *mitgargar fil-maħaakim* dragged through the courts. - iva *mitgargar*.

ج ر ج ر[2] see ج ر ج ى ر: *gargiir*

ج ر ج س

جرجس *girgis* /prop n/ male given name. *maari girgis* St. George.

ج ر ج و د

جرجودة *garguuda* /n/ variety of date.

ج ر ج ى ر

جرجير *gargiir* /n/ rocket (Eruca sativa). *gargiir ʃarḍi* winter cress (Barbarea praecox).

ج ر ح

جرح *garaħ, garaħ (a)* /vt/ **1** to wound, injure. *garaħ ʃuʕuur-i* he hurt my feelings. *garaħti ʠalb-i* you broke my heart. *ʃaʃki l-miin wi-kull in-naas magariiħ [prov]* to whom can I complain when everyone is suffering? **2** /imperf only/ to behave in such a way as to make incursions on the privacy of (s.o.) *ʕeeb - ma-tigraħ-ʃ il-giraan* shame on you! don't invade the neighbours' privacy! - vn *garħ*; ava *gaariħ*; pva *magruuħ*.

جرح *garħ, garħ* /n pl *guruuħ, giraaħ*/ wound, injury. *garħ*[i] *ʁaayir* a deep wound. *yinħaṭṭ*[a] *ʕal-garħ*[i] *yṭiib* or *yiffi g-giraaħ* ≈ (something or someone) with a soothing or pleasant effect.

جارح *gaariħ*↑ /adj/ carnivorous.

جارحة *garħa, gaariħa*↑ /n pl *gawaariħ*/ **1** *[zool]* carni-

vore. *ʕiṣ-ṣuquur wi-klaab iṣ-ṣeed min il-gawaariḥ* hawks and hounds are carnivores. **2** /pl only/ members of the (human) body. *b-aḥibb-ak bi-kull[i] gawarḥ-i* I love you with my whole being.

جراحة *giraaḥa* /n/ surgery. *ʕalaat giraaḥa* surgical instruments.

جراحى *giraaḥi* /adj/ surgical. *ɛamaliyya giraḥiyya* a surgical operation.

جرّاح *garraaḥ* /n */ surgeon.

اتجرح *ʕitgaraḥ* or *ʕiggaraḥ* /vi/ to be wounded, be injured. - iva *mitgiriḥ*.

انجرح *ʕingaraḥ* or *ʕingaraḥ* = *ʕitgaraḥ*. - iva *mingiriḥ*.

جرّح *garraḥ* /vt/ **1** to scratch. *ʕir-raml[i] bi-ygarraḥ il-ɋizaaz* sand scratches glass. **2** to injure extensively. *garraḥ wiʃʃ-u* he left his face badly cut about. **3** to abuse, slander, defame. *giran-ha yaama garraḥu sumɛit-ha* how her neighbours blackened her reputation! *sitt[i] mgarraḥa* a notorious woman. - vn *tagriiḥ*; ava/pva *migarraḥ*.

اتجرّح *ʕitgarraḥ* or *ʕiggarraḥ* /vi/ **1** to be scratched. **2** to sustain extensive injuries. **3** to be slandered, be defamed. - iva *mitgarraḥ*.

ج ر د

جرد *garad,.garad (u)* /vt/ **1** to scrape clean. *kawaariɛ magruuda bil-kazlak* trotters scraped clean with the boning knife. *ʕugrudi s-siggaada* sweep the carpet with a hard brush. **2** to take an inventory of. *garad il-maxzan* he took an inventory of the store. - vn *gard, gard*; ava *gaarid*; pva *magruud*.

جرد *gard* /n/ inventory, stocktaking. *daftar gard* inventory record book.

أجرد *ʕagrad* /adj pl *gurd*/ beardless.

جراد *garaad* /coll n/ locust(s). ‖*garaad il-baḥr* crayfish.

جرادة *garaada* /unit n, pl *-aat*/ a locust.

جارود *garuud* /n/ scraper, scraping tool.

جريد *giriid* /coll n/ palm stalk(s), commonly used, when stripped of leaves, for weaving crates for the storage of vegetables, etc. *ɛaṣiir giriid* juice extracted from young palm branches for use as a base for *hubhub* (q.v.).

جريدة *giriida, gariida* /n pl *garaayid, garaayid, giridaat*/ **1** /unit n/ a palm branch. **2** a newspaper. ‖*da kalaam garaayid* ≈ that's just chatter. **3** either of the two bones in the forearm. **4** decorative seam-binding running the length of a sleeve (of a galabiya or *ɛabaaya*).

أجرود *ʕagruud* /adj pl *ʕagariid*/ beardless.

أجرودى *ʕagruudi* = *ʕagruud*.

اتجرد *ʕitgarad* or *ʕiggarad* /vi/ **1** to be scraped. **2** to be inventoried. - iva *mitgirid*.

انجرد *ʕingarad* = *ʕitgarad*. - iva *mingirid*.

جرّد *garrad* /vt/ **1** to scrape. *kaanu bi-ygarradu ṭ-ṭiin min iʃ-ʃaariɛ bi-kull[i] ṣɛuuba* they were scraping the mud from the street with great difficulty. **2** to strip, divest, relieve. *garradu ẓ-ẓaabiṭ* they stripped the officer of his rank. *garradu l-ɋassiis* they defrocked the priest. *ʕil-ḥaramiyya garradu l-beet min kull[a] ḥaaga* the thieves stripped the house bare. *ʕil-buliiṣ misku l-ḥaramiyya w-garradduu-hum min silaḥ-hum* the police caught the thieves and disarmed them. *garraduu min kull illi ḥilt-u* they robbed him of all his belongings. **3** *[mil]* to dispatch (troops). - vn *tagriid*; ava/pva *migarrad*.

تجريدى *tagriidi*↑ /adj/ abstract (of art).

التجريديّة *ʕil-tagridiyya*↑ /n/ abstractionism, abstract art.

مجرّد *mugarrad* /adj */ **1** bare, stripped. *bil-ɛeen il-mugarrada* with the naked eye. *bani ʕaadam mugarrad min il-ʕaxlaaɋ* a man totally without manners. **2** abstract. *ʃakl[i] mugarrad* abstract form. **3** *[gram]* simple. *ʕil-fiɛl il-mugarrad* the simple verb. - /adv/ **4** merely. *di mugarrad taṣawwuraat* these are no more than mere fantasies. *mugarrad ʕinni ʕatkallim titnarviz* I only have to speak and you lose your temper!

¶ *bi-mugarrad* /prep/ at the very moment of, as in *bi-mugarrad badʔ it-tazhiir* at the very start of blossoming. - *bi-mugarrad ma* /conj/ as soon as.

اتجرّد *ʕitgarrad* or *iggarrad* /vi/ to be stripped, be divested. - vn *tagarrud*↑, *tagarrud*↑; iva *mitgarrad*.

ج ر د ا ن

جردان *gardaan* /n pl *garadiin*/ standard-size barrel.

ج ر د ل

جردل *gardal* <T *gerdel*> /n pl *garaadil*/ **1** bucket, pail. ‖*ʕawaɋɋaɛ-u ẓayy ig-gardal* ≈ I'll take the sucker for all he's got! **2** dolt, sucker.

ج ر د ن

جاردن سيتى *gardin siti* /prop n/ Garden City, an upper-class district of Cairo adjoining the Nile.

ج ر ذ see ج ر ز[1]

ج ر ر

جرّ *garr[i] (u)* /vt/ **1** to pull, drag. *ɛarabiyya ygurr-a-ha ḥuṣaan* a cart pulled by a horse. ‖*bi-ygurr[i] rigl-u* (1) he limps. (2) he leads him on, he leads him up the garden

path. - *ʕik-kalaam bi-ygurr^{i} baʕḍ-u* one subject of conversation leads to another. - *ʕil-ʔalif tigurr il-bih* ≈ one thing leads to another. - *garr-u fil-kalaam* he led him on. *garr^{i} mʕaa kalaam* he entered into conversation with him. - *garrit diḥka* she gave a drawn out (provocative) laugh. - *garr^{i} ʃakal* provocation, picking a quarrel, as in *qaṣd-ak hizaar walla garr^{i} ʃakal* are you just joking or are you trying to provoke (me)? - *garr^{i} naaʕim maʕa* see *naaʕim*. **2** to buy (goods, especially groceries) on credit. - vn *garr, gararaan*; ava *gaarir*; pva *magruur*.

جرّ *garr*^{2} /vn/ ‖*ḥarf^{i} garr [gram]* preposition.

¶ *garra: wi-halumma garra* and so forth.

مجرور *magruur* /n pl *magariir*/ **1** lavatory unit. **2** *[rur]* cesspit.

جرّة *garra* /n/ **1** /pl *-aat*/ instance noun of *garr*. *ʕiddii-ni garra min sigart-ak* give me a drag of your cigarette. ‖*garrit qalam* a (mere) stroke of the pen, as in *bi-garrit qalam ʕawaddii-k is-sign* I could send you to prison with a stroke of the pen. **2** /pl *giraar, gurar*/ earthenware jar, pitcher (see Pl.A, 10). ‖*kaan fi-garra w-xarag li-barra [prov]* (he was in a jar and came out) ≈ he has risen in the world. - *miʃ kull^{i} marra tislam ig-garra [prov]* ≈ don't rely on always being so lucky.

جرّة *gurra* /n pl *-aat*/ spoor, trail, track. ‖*ma-ḥadd^{i}-ʃ ʕarif-lu gurra* or *ʕid-dibbaan il-ʕazraq ma-yiʕraf-ʃ^{i} gurrit-u* ≈ no one has seen hide or hair of him.

جرّ *girr* /interj/ shoo! (to a dog). *ʕimʃi girr^{i} min hina* get out! go away!

جرّار *garraar* /n pl *-aat*/ **1a** any of a range of engines and devices for dragging or pulling (such as a tractor, locomotive, tugboat, carriage-return mechanism of a typewriter, harness trace). **1b** trailer. *luuri b-garraar* trailer-truck. **2a** dumb waiter, service lift. **2b** (also *sufragi garraar*) bus-boy. **3** (also *baab garraar*) sliding door. **4** pair of flat slippers.

جرّارة *garraara* /n pl *-aat*/ trailer.

جرايز *garaayir* /pl n/ wake, consequences, follow-up (of something bad). *ʕiḥna lissa ʃ-garayir-ha* we're still suffering from the consequences. *kull illi ḥaṣal da kaan min garayr-ak* all that happened was because of you.

اتجرّ *ʕitgarr* or *ʕiggarr* /vi/ passive of *garr*. ‖ *ʕitgarr^{i} min hina* buzz off! - *ʕiṣ-ṣanf^{i} da ma-yitgarr^{i}-ʃ kitiir* this line of merchandise is not much in demand. - iva *mitgarr*.

انجرّ *ʕingarr* = *ʕitgarr*. - iva *mingarr*.

انجرارة *ʕingiraara* /n pl *-aat*/ debt owed for goods acquired on credit. *miʃ mumkin taaxud gidiid ʕilla lamma txallaṣ ingiraarit if-fahr illi faat* you cannot start new credit until you have paid off what you owe from last month.

اجترّ *ʕigtarr*$^{\uparrow}$ /vt/ **1** *[zool]* to chew (the cud), ruminate (food). **2** to ponder over (especially sorrows). *maḍḍit il-leel sahraana tigtarr^{i} hmum-ha* she spent a sleepless night mulling over her troubles. - vn *ʕigtiraar*; ava *migtarr, mugtarr*. see further under ش ر ر^{3}

استجرّ *ʕistigarr*$^{\downarrow}$ /vt/ to draw (e.g., money, goods) in stages or on credit. *yaama qult-i-lu baṭṭal tistigarr^{i} bqalt-ak minnu ʃukuk* how often I've told him not to keep taking his groceries on credit. - vn *ʕistigraar*; ava *mistigarr*.

استجرارة *ʕistigraara*$^{\downarrow}$ /n pl *-aat*/ debt owed for goods acquired on credit.

ج ر ز^{1}

جرذ، جرز *girz* /n pl *girzaan*/ large rat.

ج ر ز^{2}

see ج ر س^{2} : *garaz*

ج ر س^{1}

جرسة *gursa, girsa* /n pl *guras, giras*/ public disgrace, scandal.

جرسى *gurasi* /n pl *-yya*/ scandalmonger.

جرّس *garras* /vt/ to shame publicly, bring scandal upon. *garrast-i-na fil-ḥitta kull-a-ha bi-zʕiiq-ak* you've made us a scandal throughout the neighbourhood with your shouting! - vn *tagriis*; ava/pva *migarras*.

اتجرّس *ʕitgarras* or *ʕiggarras* /vi/ to be shamed publicly, be made the subject of scandal. - iva *mitgarras*.

ج ر س^{2})

جرس *jirs* <Engl> /n/ jersey, sweater. - also *ʃirz*.

جرس *garas* (also *garaz*) /n pl *ʕagraas, garasaat*/ bell. ‖*tiʕbaan ʕabu garas* rattlesnake.

ج ر س م

جرثومة *gursuuma, garsuuma* /n pl *garasiim*/ germ, microbe. *baṣṣit-li min fooq li-taḥt^{i} tqul-ʃ^{i} gursuuma* she looked me up and down as if I were a germ.

ج ر س ن

جرسونيرة *garsunyeera* <Fr *garçonnière*> /n pl *-aat*/ accommodation acquired by a man for the purposes of clandestine affairs with women.

ج ر س و ن

جرسون *garsoon* <Fr *garçon*> /n/ **1** /pl *-aat*/ waiter. **2** (also *ʕala garsoon*) /no pl/ gamin hairstyle (for women).

ج ر س ى

جرسيه *jirseeh* <Fr> /n/ **1** jersey (knitted fabric). **2** pullover.

ج ر ش [1]

جرش *garaf (u)* **1** /vt/ to crush, grind coarsely (e.g., legumes). *bi-yugruf il-fuul ʕafaan yiʕmil ṭaʕmiyya* he crushes the broad beans to make *ṭaʕmiyya*. *bunn[i] magruuf* coarsely ground coffee. *talg[i] magruuf* crushed ice. **2** to grate, crunch. *ʃir-raml[i] b-yugruf ʕala l-balaaṭ* the sand crunches on the tiles (when one walks on it). *ʃasnaan-u b-tugruf wi-huwwa naayim* he's grinding his teeth in his sleep. - vn *garf, garafaan*; ava *gaarif*; pva *magruuf*.

اتجرش *ʃitgaraf* or *ʃiggaraf* /vi/ to be crushed, be ground coarsely. - iva *mitgirif*.

انجرش *ʃingaraf* = *ʃitgaraf*. - iva *mingirif*.

ج ر ش [2]

جراش، جراج *garaaf* (also *garaaj*) <prob Fr> /n pl -*aat*/ garage.

جرّش *garraf* **1** /vt/ to park (a vehicle, not necessarily in a garage). *garraf il-ʕarabiyya gamb ir-raṣiif* park the car by the kerb. **2** /vi/ to be parked (of a vehicle). *ʃil-luuri garraf fil-ħoof il-ʕurayyib* the lorry parked in the yard nearby. - vn *tagriif*; ava/pva *migarraf*.

اتجرّش *ʃitgarraf* or *ʃiggarraf* /vi/ to be parked (of a vehicle). - iva *mitgarraf*.

ج ر ع

جرع *garaʕ↑ (a)* /vt/ to drink, pour (a drink, especially medicine) down the throat. *garaʕ id-dawa bil-ʕafya* he could hardly gulp the medicine down.

جرعة *gurʕa* /n pl -*aat, guraʕ*/ mouthful, draught, gulp, dose (of, e.g., water, medicine). *xud talat gurʕaat min id-dawa yawmiyyan* take three doses of medicine daily.

جرّع *garraʕ* /vt/ to make (s.o.) swallow, force (s.o.) to drink. *garraʕuu is-simm* they forced poison down his throat. ‖*yaama garraʕ-ni z-zaman min kaas-u* ≈ how much have I been forced to drink from the cup of suffering! - vn *tagriiʕ*; ava/pva *migarraʕ*.

اتجرّع *ʃitgarraʕ* or *ʃiggarraʕ* /vt/ to be made to swallow, force oneself or be forced to take (e.g., medicine, maltreatment). - vn *tagarruʕ↑*; ava/iva *mitgarraʕ*.

ج ر ف

جرف *garaf (u)* /vt/ **1** to carry along, carry away (of a current). **2** to shovel, scoop, sweep up. - vn *garf, garafaan*; ava *gaarif*; pva *magruuf*.

جارف *gaarif↑* /adj/ sweeping, irresistible (of a current). ‖*ħubb[i] gaarif* overwhelming love.

جرف *garf* /n pl *guruuf*/ **1** clod of earth. *wiqiʕ ʕalee garf[i] min foḍoq il-ħeeṭa* a lump of dirt fell on his head from off the wall. **2** oaf, dolt.

جاروف *garuuf* /n pl *gawariif*/ **1** small spade or shovel. **2** dustpan. **3** wooden threshing shovel. **4** scoop (for sugar, rice etc.).

جرّافة *garraafa* /n pl -*aat*/ mechanical shovel.

مجرفة *magrafa* /n pl *magaarif*/ hoe-shaped iron for raking ash from an oven or hearth.

اتجرف *ʃitgaraf* or *ʃiggaraf* /vi/ to be carried along by a current (of water, air, opinion etc.). - iva *mitgirif*.

انجرف *ʃingaraf* = *ʃitgaraf*. - iva *mingirif*.

جرّف *garraf* /vt/ to rake out (e.g., ash). - vn *tagriif*; ava/pva *migarraf*.

اتجرّف *ʃitgarraf* or *ʃiggarraf* /vi/ to be raked out. - iva *mitgarraf*.

ج ر ف ت ت

جرافتّة *garafatta* <It *cravatta*> /n pl -*aat*/ tie, cravat. - also *karafatta*.

ج ر ف –

جريفروت *giriffiruut* <Engl> /n/ grapefruit. - also *giribb, giribbifruut, giribfiruut*.

ج ر ف ى ت

جرفيت *garafiit, girafiit* <Fr> /n/ graphite.

ج ر ك

جهاركاه *girka* <T *çargâh* from P> /n/ *[mus]* **1** name given to the note F natural. **2** mode in Arabic music having F natural, B flat and E half flat.

ج ر م [1]

جرم *gurm* /n/ criminal behaviour, criminality.

جريمة *gariima* /n pl *garaayim*/ crime. *ʃeeh ig-gariima lli ʕamalnaa-ha* what crime did we commit?

جرّم *garram* /vt/ to make (s.th.) illegal. *ʃil-ħukuuma garramit it-tadxiin fis-sinima* the government made smoking in the cinema illegal. - vn *tagriim*; ava *migarram*.

اتجرّم *ʃitgarram* or *ʃiggarram* /vi/ to be made illegal. - iva *mitgarram*.

أجرم *ʃagram* /vi/ to behave ruthlessly. *ʃagramt[i] f-ħaqq-i* you have trampled on my rights. - vn *ʃigraam*; ava *mugrim*.

إجرامى *ʃigraami↑* /adj/ criminal. *ʃaʕmaal ʃigramiyya* criminal acts.

مجرم *mugrim* **1** /n * and pl *magarma*/ criminal. **2** /adj */ **2a** ruthless. **2b** naughty. (of a child). see further under م ج ر م

استجرم *ʃistagram* **1** /vt/ to consider criminal. *kull-i-na stagramnaa f-ḍarb-u lik-kalb* we all thought him a bully for beating the dog. *ʃin-naas istagramit ʕamlit-u s-*

sooda people condemned his dreadful behaviour. **2** /vi/ to behave, or enjoy behaving, in a criminal fashion. *ʃeeh fuʁl il-istigraam da* what's this high-handed behaviour! - vn *ʃistigraam*; ava/pva *mistagram*.

ج ر م
جرمة *gurma* /n/ huge quantity, large number. *ɛandu gurmit ɛiyaal* he has a horde of children.
جرم *girim* /adj */ sturdy, robust, large of stature.
جرومية *gurumiyya* /n/ bulkiness (especially of a human body). *ʃamma faxṣ[i] girim gurumiyya* what a mountain of a man!
جرامة *garaama = gurumiyya*.
اجرمّ *ʃigramm* /vi/ to become large in structure (of living things). *ʃif-fagara grammit* the tree grew thick and tall. - ava *migrimm*.

ج ر م ق
جرمق *garmaq* /n/ huge mob. *ɛanduhum garmaq ɛiyaal* they have a whole tribe of children.

ج ر ن
جرن *gurn* /n pl *ʃagraan, giraan*/ **1a** threshing floor, threshing area. **1b** open space in a village (where people sit, chat etc.). **2** wooden mortar. **3** *[Chr]* (baptismal) font.
جرّن *garran* /vt/ to place (e.g., wheat) in a *gurn*. - vn *tagriin*; ava/pva *migarran*.
اتجرّن *ʃitgarran* or *ʃiggarran* /vi/ to be placed in a *gurn*. - iva *mitgarran*.

ج ر ن ا ل
جرنال، جرنان *gurnaal* or *gurnaal*, (also *gurnaan↓*, *gurnaan↓*) <Fr *journal*> /n pl *garaniil, garaniin*/ newspaper.

ج ر ن ا ن see ج ر ن ا ل

ج ر ن ت ت see ج ر ن ى ت: *garanitta*

ج ر ن ى
جرونيا *garunya* <prob It *geranio*> /n/ variety of geranium (Pelargonium zonale).

(ج ر ن ى ت)
جرنيت *garaniit, giraniit* <Fr> /n/ granite.
جرانيتة *garaniita* (also *garanitta*) <It *granita*> /n/ semi-frozen syrup, sorbet (usually lemon-flavoured).

ج ر و ب
جروب *guruub* <Engl> /n pl *gurubaat, gurubbaat*/ group.

ج ر و ل
جرول *garwil* /vt/ to brush with a broom or one's hand (large pieces of, e.g., broken sugar, stones) from the surface of a pile of s.th. smaller. - also *galwil, galwin*. - vn *garwala*; ava/pva *migarwil*.
اتجرول *ʃitgarwil* or *ʃiggarwil* /vi/ passive of *garwil*. - also *ʃitgalwil, ʃitgalwin*. - iva *mitgarwil*.

ج ر و ه
جيروه *jiruuh* <It *giro*> /n pl *-aat*/ armhole (in a garment).

ج ر ى [1]
جرى *giri (i)* /vi/ **1** to run. *giryit ɛalee w-ḥaḍanit-u* she ran to him and embraced him. **2** to speed (away). *ʃis-samaka giryit* the fish darted off. *saaɛit ma nadahna lit-taks[i] giri* as soon as we called the taxi, it speeded away. **3** to flow. *ʃil-mayya b-tigri lil-baḥr* the water flows to the sea. *ḥubb-a-ha b-yigri f-damm-u* ≈ he is deeply in love with her. *ʃid-dumuuɛ giryit fi-ɛnee lamma ʃaf-ha* the tears sprang to his eyes when he saw her. ‖*riiq-i giri* my mouth watered. - *ʃil-filuus bi-tigri f-ʃiid-u* ≈ he's well-off. - *ḥisaab gaari [bank]* current account. - vn *gary, garayaan*; ava *gaari*.
¶ *giri ɛala* to labour for the sake of, work to provide for. *bi-nigri ɛala ɛef-na* we work for our living. *di sitt[i] maskiina b-tigri ɛala ʃarbaɛ ɛiyaal* she's a poor woman struggling to keep four children.
جرى *gara (a)* /vi/ to happen, occur. *tistaḥli lli yigraa-lik* you deserve what you get. *ʃana xaayif yikuun gara-lha ḥaaga* I'm afraid something may have happened to her. *gara l-ɛaql-ak ʃeeh* have you gone mad? *miin ɛaarif kaan raaḥ yigra ʃeeh* who knows what would have happened? *ḥ-aqabl-u wi-lli yigra yigra* I'll meet him come what may! *ya reet illi gara ma kaan* would that it had never happened! ‖*ma-yigraa-ʃ ḥaaga* ≈ it's O.K! it doesn't matter!
جرية *garya[1]* /inst n, pl *-aat*/ run. *garya musriɛa* a fast run.
جارية *garya[2]* /n pl *gawaari*/ *[obsol]* female slave, concubine. *ʃuṭbuxi ya garya. - kallif ya siid-i [prov]* ≈ he who calls the tune must pay the piper. *sitt[i] w-garyiteen ɛala qaly[i] beḍteen [prov]* ≈ a sledge hammer to crack a nut.
جراية *giraaya* /n pl *-aat*/ (also *ɛeeʃ giraaya*) daily bread-

ration (used in prisons, the army, and (formerly) at el-Azhar).

مجرى *migra* /n pl *-aat*/ groove. *fii migra kida l-ʛagala b-timfi fiiha* there is a groove along which the wheel runs.

مجرى *magra* /n pl *magaari*/ **1** course. *magra ḥayaat-i* the course of my life. **2a** groove, slot. **2b** channel, conduit. *magra l-ʛuyuun* the fourteenth-century aqueduct situated in south-east Cairo. ‖*rigʛit il-mayya l-magarii-ha* ≈ life returned to its normal course. — *ʕil-magaari* /pl n/ **3** the sewers, the sewage system.

جرّى *garra* /vt/ **1** to cause to run. *laazim tigarrii kull[i] yoom* you must exercise him every day. **2** to cause to flow. *ḥaaga tgarri r-riiq* something which makes the mouth water. **3** to clear of obstructions (in order to make a flow possible). *garri l-masuura di* clear this pipe. - vn *tagriyya*; ava/pva *migarri*.

جارى *gaara[1]* /vt/ **1** to keep pace with, conform to, comply with. *laazim il-waaḥid yigaari l-mooda* one should keep up with the fashions. *ʕana mif qaadir ʕagarii-k fi-kalaam-ak* I cannot go along with what you say. **2** to humour, indulge. *gaari l-mudiir li-ḥadd[i] ma taaxud il-ʛilaawa* humour the director till you get the rise. - vn *migariyya*; ava *migaari*.

أجرى *ʕagraʔ, ʕagraʔ* /vt/ to set in motion, effect, carry out. *ḥa-nigri l-ʕiḥṣaʕiyyaat il-lazma* we'll make the necessary statistical runs. - vn *ʕigraaʕ*; ava *migri, mugri*; pva *mugra*.

إجراء *ʕigraaʕʔ* /n pl *-aat*/ measure, procedure, step. *da mugarrad ʕigraaʕ rasmi* that is merely a formal measure. *ʕigraʕaat qanuniyya* legal proceedings.

إجرائى *ʕigraaʕiʔ* /adj */ procedural. *nuqṭa ʕigraʕiyya* a procedural point.

ج ر ى[2] see ج ر ء[1]: *ʕistagra*

ج ر ى ج

جريجى *giriigi* <Engl> **1** /adj/ Greek. **2** /n pl *girigiyyiin, giriig*/ a Greek.

ج ز ء[1]

جزء *guzʕ* /n pl *ʕagzaaʕ*/ **1** part, piece. *ʕagzaaʕ il-makana* the machine parts. **2** any of the thirty sections into which the Koran is divided. see further under ج ز ء[1]

جزئى *guzʕiʔ* /adj */ partial. *ʕiʛtiraaf guzʕi* partial recognition. ‖*ʕil-maḥkama l-guzʕiyya* court of summary justice.

جزىء *guzeeʕ, guzayʕʔ* /n pl *-aat*/ molecule.

جزيئى *guzeeʕi* /adj/ molecular.

جزّأ *gazzaʕ* /vt/ to section, split up. *tagziiʕ iz-zarra* splitting the atom. - vn *tagziʕa, tagziiʕ*; ava/pva *migazzaʕ*.

تجزئة *tagziʕa* /n/ sectioning, subdividing. ‖*tuggaar tagziʕa* retail merchants.

اتجزّأ *ʕitgazzaʕʔ* or *ʕiggazzaʕʔ* /vi/ to be sectioned, be split up. - vn *tagazzuʕ*; iva *mitgazzaʕ*.

ج ز ء[2] see ج ز ى[1]: *gazaaʕ*

ج ز ب

جذب *gazab (i)* /vt/ **1** to attract. *bi-yigzib iz-zabaayin* it attracts customers. **2**ʔ to pull. *gazabt-u min ʕiid-u* I pulled him by the hand. - vn *gazb*; ava *gaażib*; pva *magzuub*.

جاذبيّة *gaazibiyyaʔ* /n/ attraction, attractiveness, pull. *ʕil-gaazibiyya l-ginsiyya* sexual attraction. ‖*qanuun ig-gaazibiyya* the law of gravity.

مجذوب *magzuub* /adj pl *magaziib*/ possessed, insane (applied in particular to dervishes).

جذّاب *gazzaab* /adj */ attractive, charming.

اتجذب *ʕitgazab* or *ʕiggazab* /vi/ **1** to be attracted. **2** to be pulled. **3** to act as if possessed (particularly in contexts of religious ecstasy). - ava/iva *mitgizib*.

انجذب *ʕingazab* = *ʕitgazab*. - vn *ʕingizaab*; iva *mingizib*.

ج ز ر[1]

جزر *gazar[1]* /coll n/ carrot(s).

جزرة *gazara* /unit n, pl *-aat*/ a carrot. ‖*gazarit ḥariiq* fire-cock, fire-hydrant. - *maḥbas gazara* stop-cock.

جزراية *gazaraaya* = *gazara*.

ج ز ر[2]

جزيرة *giziira* /n pl *gazaayir*/ **1** island. ‖*ʕig-giziira* /prop n/ Guezira, the larger of the two islands in the Nile at Cairo. **2** traffic island.

الجزائر *ʕil-gazaayir* /prop n/ **1** Algeria. **2** (*madiinit*) *il-gazaayir* Algiers.

جزايرى *gazayri* **1** /adj invar/ term applied to anything planted near the banks of a river, or on islands in a river. **2** /adj */ Algerian. **3** /n */ an Algerian.

ج ز ر[3]

جزر *gazar[2] (u)* /vt/ to deal harshly with (in money matters). *gazar-ni fis-siʛr* he charged me a murderous price. *beeʛa gazr* a terrible deal. - vn *gazr, gazr*; ava *gaazir*; pva *magzuur*.

جزارة *gizaara* /n/ **1** occupation or practice of butcher-

ing. **2** /pl *-aat*/ butcher's shop.
جزّار *gazzaar* /n */ butcher.
مجزرة *magzara* /n pl *magaazir*/ massacre.
انجزر *ʃitgazar* or *ʃiggazar* /vi/ to be dealt with harshly (over money). - iva *mitgizir*.
انجزر *ʃingazar* = *ʃitgazar*. - iva *mingizir*.

ج ز ر [4]
جزر *gazr* /n/ ebb. *madd[i] w-gazr* tide, flow and ebb.

ج ز ر [5] see ج د ر [4]: *gazr, gizr[1]*

ج ز ز [1]
جزّ *gazz[1] (i)* /vt/ to shear, clip. *gazz[i] faɛr-u* he cut his hair very short. ‖*gazz[i] raqabit-ha* he cut off her head. - vn *gazz, gazazaan*; ava *gaaziz*; pva *magzuuz*.
جزّة *gazza* /n pl *-aat*/ **1** /inst n/ a shearing, a clipping. **2** shorn fleece.
جزّة *gizza* /n pl *-aat, gizaz*/ shorn fleece.
انجزّ *ʃitgazz* or *ʃiggazz* /vi/ to be sheared, be clipped. - iva *mitgazz*.
انجزّ *ʃingazz* = *ʃitgazz*. - iva *mingazz*.

ج ز ز [2]
جزّ *gazz[2] (i)* /vi/ to bite hard. *gazz[a] ɛala ṣbaaɛ-i* he bit down on my finger. *gazz[a] ɛala snaan-u* he clenched his teeth. - also *kazz*. - vn *gazz, gazazaan*; ava *gaaziz*.

ج ز ز [3] see ج ز و ز: *gazuuza*

ج ز ع [1]
جزع *gazaɛ[1] (a)* /vt/ to sprain. *ʃiid-i magzuuɛa* my wrist is sprained. - vn *gazɛ, gazaɛaan*; ava *gaaziɛ*; pva *magzuuɛ*.
جزعة *gazɛa* /n pl *-aat*/ a sprain.
انجزع *ʃitgazaɛ* or *ʃiggazaɛ* /vi/ to be sprained. - iva *mitgiziɛ*.
انجزع *ʃingazaɛ* = *ʃitgazaɛ*. - iva *mingiziɛ*.

ج ز ع [2]
جزع *gazaɛ[2] (a)* **1** /vt/: *gazaɛ in-nifs* to cause to feel sick, nauseate. *ʃil-ʃakl[i] gazaɛ nifs-i* the food made me feel sick. **2** /vi/: *ʃin-nifs[i] gazaɛit* to feel sick, be nauseated. *nifs-u gazaɛit lamma ʃamm ir-riiḥa l-wiḥʃa* he felt sick when he smelled the stench. - vn *gazaɛ, gazaɛaan*; ava *gaaziɛ*; pva *magzuuɛ*.
جزعانة *gazɛaana* /fem adj/ nauseated. *nifs-i gazɛaana* I feel sick.
جزّع *gazzaɛ[1]* /vt/ to cause to feel sick, nauseate. *ṭaɛm[i] ygazzaɛ in-nifs* a sickening taste. - vn *tagziiɛ*; ava *migazzaɛ*.
اتجزّع *ʃitgazzaɛ[1]* or *ʃiggazzaɛ[1]* /vi/ to be made to feel sick, be nauseated. - iva *mitgazzaɛ*.

ج ز ع [3]
جزّع *gazzaɛ[2]* **1** /vt/ to marble, give a (synthetic) graining or veining effect to. **2** /vi/ to acquire a (synthetic) graining or veining effect. - vn *tagziiɛ*; ava/pva *migazzaɛ*.
اتجزّع *ʃitgazzaɛ[2]* or *ʃiggazzaɛ[2]* /vi/ to be marbled, acquire a (synthetic) graining or veining effect. - ava/iva *mitgazzaɛ*.

ج ز ع [4]
جذع *gizɛ* /n pl *guzuuɛ*/ **1** torso (of a human). **2** trunk (of a tree).

ج ز ف
جزافا *guzaafan* /adv/ haphazardly. *bi-yiṣrif fuluus-u guzaafan* he spends his money thoughtlessly.
جزافي *guzaafi* /adj/ haphazard, random. *fuxl-u dayman guzaafi min ɣeer taxṭiiṭ* his work is always haphazard, without a proper plan. *taqdiir guzaafi* arbitrary estimation.
جازف *gaazif* /vi/ to take risks. - vn *migazfa*; ava *migaazif*.
مجازفة *migazfa, mugazfa* /n pl *-aat*/ risk.

ج ز ل
جزلة *gizla* /n pl *gizal, gizlaat*/ thick slice, steak (of meat or fish).
جزل *gizil* /adj */ thick. *faɛr-a-ha gizil* she has thick hair.
جزّل *gazzil* **1** /vt/ to slice. *xud is-samaka di gazzil-ha* take this fish and cut it in slices. **2** /vi/ to become firm and thick (of flesh). *raqabit-ha mgazzila* she has a neck like an ox. - vn *tagziil*; ava *migazzil*.
اتجزّل *ʃitgazzzil* or *ʃiggazil* /vi/ sliced. - iva *mitgazzil*.

ج ز ل ا ن
جزلان *guzlaan↓* /pl *-aat*/ purse.

ج ز ل ي ن
جازولين *gazuliin* <prob Fr> /n/ petrol, gasoline.

ج ز م [1]
جزمة *gazma* <T *çizme*> /n pl *gizam, gazmaat*/ **1** pair of shoes. *gazma b-raqaba* pair of boots. ‖*muxx-u gazma* he's a dolt. - /often with an association of impurity and

degradation/ ʃibn[i] gazma ≈ low bastard. da-bn[i] kalb[i] ɛaawiz iḍ-ḍarb[i] b-sittiin gazma he is a son of a bitch and should be beaten with sixty shoes (i.e. should be given the most humiliating of punishments). wala yhimm-ak fi-gazmit-ak ≈ you shouldn't give a tinker's cuss. 2 footrest on a boot-black's stand or sewing machine.

جزمجى gazmagi /n pl -yya/ shoemaker, cobbler.

جزماتى gizamaati /n pl -yya/ shoemaker, cobbler.

[2] ج ز م

جزم gazam[1] (i) /vi/ to decide, be decisive. m-aqdar-ʃ agzim bi-raʃy[i] fil-ḥaala di I can't give a definite opinion in this case. - vn gazm; ava gaazim.

جزم gazm /n/ 1 [gram] jussive mood, apocopate form. 2: kazlak gazm [butcher] boning knife.

مجزوم magzuum[1] /n/ [gram] not followed by a vowel (of a consonant): fiɛl[i] magzuum a verb in the apocopate (jussive) form.

جزم gazam[2]: habb[i] gazam see habb[2].

[3] ج ز م

جذام guzaam /n/ leprosy.

مجذوم magzuum[2] /adj */ leprous.

ج ز ن see ج ز و ن: gazuun

ج ز و ر –

جازورين gazwariin /coll n/ evergreen tree(s) of the pine family (Casuarina stricta). - also kazwariin.

جازورينة gazwariina /pl -aat/ unit, noun of gazwariin. - also kazwariina.

ج ز و ز

جازوزة gazuuza <Gr gazoza> /n/ pop, carbonated soft drink. - also ʃazuuza, kazuuza.

ج ز و ن

جازون gazuun <Fr gazon> /n/ [bot] ray grass (Lolium perenne).

[1] ج ز ى

جزى gaza /vt/ to reward. gazaa-k allaah kull[i] xeer or rabb-i-na yigzii-k may God reward you! - vn gazaaʔ; ava gaazi; pva magzi.

جزاء، جزاء giza, gazaaʔ /n pl -aat/ punishment, penalty. ḍarbit gazaaʔ [soccer] penalty kick.

جزاة gazaat or gizaat /n, always in constr/ recompense, requital. hiyya di gizaat-i is this (all) the reward I get? gazaat il-ʃiḥsaan ḍarb il-ʃiɢlaam [prov] be charitable and your only reward is a beating. gizaat-ak illi ma-smiɛt[i]-ʃ kalaam ʃabuu-k that's what you get for not heeding your father's advice.

جازى gaaza /vt/ 1 to punish. ʃil-mudarris gazaa b-ɛalɢa the teacher punished him with a beating. ʃallaah yigaazi lli kaan is-sabab may God punish the one who caused all this! || ʃalla ygaazi ʃtaan-ak ≈ you little devil! 2 to requite (of God). - ʃallaah yigaazii-k xeer may God reward you! - vn migaziyya; ava migaazi.

اتجازى ʃitgaaza or ʃiggaaza /vi/ to be punished. - iva mitgaazi.

[2] ج ز ى

جزية gazya /n pl -aat/ cross-beam supporting the framework of a saqya (see Pl.E. 3).

ج س ت م –

جستمان gustumaan /n pl -aat/ [naut] bowsprit.

ج س د

جسد gasad /n pl ʃagsaad/ human body. ʃit-tanaawul min gasad ir-rabb[i] w-damm-u [Chr] the partaking of the body and blood of the Lord.

جسدى gasadi /adj/ bodily, physical. ʃil-ʃamraaḍ ig-gasadiyya bodily illnesses. ḥubb[i] gasadi carnal love.

جسّد gassid /vt/ to embody, incarnate, represent in concrete form. ʃil-film[i] gassid muʃkilit is-sitt il-mitwaẓẓafa the film illustrated the problem of the working woman. bi-yɢuulu ʃinn if-fiṭaan bi-ygassid nafs-u ɛala ʃakl[i] baɛḍ il-ḥayawanaat they say the devil manifests himself in the form of certain animals. - vn tagsiid; ava migassid.

اتجسّد ʃitgassid or ʃiggassid /vi/ to become corporeal, materialize, become incarnate. kull il-faḍaayil itgassidit fii all virtues were incarnate in him. - vn tagassud; ava mitgassid.

التجسّد ʃit-tagassud /n/ [Chr] the incarnation (of Christ).

[1] ج س ر

جسر gisr /n pl gusuur/ embankment (on a waterway). ɛala gisr it-tirɛa on the canal bank. raas gisr [mil] bridgehead.

جسّر gassar /vi/ to make an embankment. gassar ɛal-mayya make a bank to enclose the water. - vn tagsiir; ava migassar.

اتجسّر ʃitgassar or ʃiggassar /vi/ (impersonal) passive of gassar. laazim yitgassar ɛal-mayya an embankment should be made round the water. - iva mitgassar.

ج س ر ²

جسارة *gasaara, gasaara* /n/ audacity, courage, boldness.

جسور *gasuur* /adj */ courageous, audacious, bold.

اتجاسر *ʔitgaasir, ʔitgaasar* or *ʔiggaasir, ʔiggaasar* /vi/ to dare, venture, have the courage (to do s.th.). *tiqdar titgaasir tiquul kida f-wiff-u* do you dare say that to his face? - vn *tagaasur*; ava *mitgaasir*.

ج س س ¹

جسّ *gass (i)* /vt/ to test, examine, sample. *gass il-laḥma qabl[i] ma ṭallaʕ-ha min il-furn* he tested the meat (to see that it was done) before taking it out of the oven. *gass il-xuḍaar qabl[i] ma yiftirii* he examined the vegetables before he would buy them. *ʔid-duktoor gass[i] nabḍ-i* the doctor took my pulse. *gassu nabḍ in-naas* they sounded out the mood of the people. - vn *gass*; ava *gaasis*.

جسّة *gassa* /inst n, pl -*aat*/ a test, a sounding. *ʕamalu gassaat ʕafaan yifuufu nooʕ il-ʔasaas il-munaasib* they made tests (by drilling in the soil) to decide which was the right type of foundation.

جاسوس *gasuus* /n pl *gawasiis*/ spy.

جاسوسيّة *gasusiyya* /n/ espionage.

جسّاس *gassaas* /n */ **1** *[geol]* an expert in taking soundings (especially in search of oil or water). **2** *[rur] gassaas bahaayim* an expert in testing pregnant cattle to decide the age of the foetus.

مجسّ *migass* /n pl -*aat*/ **1** probe. **2** plumb-line.

اتجسّ *ʔitgass* or *ʔiggass* /vi/ to be tested, be examined, be sampled. - iva *mitgass*.

انجسّ *ʔingass* = *ʔitgass*. - iva *mingass*.

اتجسّس *ʔitgassis* or *ʔiggassis* /vi/ to spy. *bi-yitgassisu ʕaleena b-ṭayyaraat* they spy on us with planes. - vn *tagassus*; ava *mitgassis*.

استجسّ *ʔistagass* /vt/ to spy out, pry into. *ruuḥ istigass il-xabar* go and make secret inquiries about the news. - ava *mistigass*.

ج س س ² see ج ت ت : *gussa*

ج س م

جسم *gism* /n pl *ʔagsaam*/ body. *ʔil-ʕaql is-saliim fil-gism is-saliim* a sound mind resides in a sound body. *gism il-ʕarabiyya* the body of the car. *ʔagsaam variiba↑* foreign bodies, foreign matter. ‖ *ʔitʕib gism-ak wala titʕib qalb-ak [prov]* tire yourself physically (by doing the job yourself) rather than mentally (by trying to get others to do it). *gism ig-gariima* material evidence of the crime.

جسمى *gismi* /adj/ bodily.

جسمانى *gusmaani* /adj/ bodily, physical.

جسامة *gasaama* /n/ enormity, greatness. *kaanit il-xasaayir fi-xaayit il-gasaama* losses were absolutely immense.

جسيم *gasiim↑* /adj/ great, tremendous. *xaṭar gasiim* great danger. *maʃaakil gasiima* enormous problems.

أجسم *ʔagsam* /el/ more/most great or tremendous.

جسّم *gassim* /vt/ **1** to embody, give form to. *timsaal mugassam ʕar-raḥma* a statue representing mercy. **2** to give substance to, magnify. ‖ *ṣoot mugassam* stereophonic sound. - *ṣuura mugassama* three-dimensional picture. - vn *tagsiim*; ava *migassim*; pva *mugassam*.

اتجسّم *ʔitgassim* or *ʔiggassim* /vi/ **1** to take shape or form, materialize. *ʔil-fikra tgassimit fi-zihn-i* the idea formed in my mind. **2** to be given shape, be formed. - vn *tagassum*; ava/iva *mitgassim*.

ج ش ش

أجشّ *ʔagaʃʃ↑ : ṣoot ʔagaʃʃ* a husky voice.

ج ش ع

جشع *gaʃaʕ* /n/ greed.

جشع *gaʃiʕ↑, giʃiʕ* /adj */ greedy.

أجشع *ʔagʃaʕ* /el/ more/most greedy.

ج ش م ¹

جشّم *gaʃʃim↑* /vt/ to burden (s.o.). *ʔiʃ-ʃuɣlaana `di gaʃʃimit-ni mataaʕib kitiira* this business made me undergo many hardships. - vn *tagʃiim*; ava *migaʃʃim*.

اتجشّم *ʔitgaʃʃim* or *ʔiggaʃʃim* /vt/ to undergo (a hardship). *yaama tgaʃʃimt[i] maṣaaʕib ʕafaan xaṭr-ak* how many difficulties I suffered for your sake! - vn *tagaʃʃum*; ava *mitgaʃʃim*.

ج ش م ²

جشمة *gaʃma* /n/ adjustment bolt (on a goldsmith's scale).

ج ش ى ه

جيشيه *giʃeeh* <Fr *guichet*> /n pl -*aat*/ cashier's window.

ج ص ط ن

جصطن *gaṣṭan↓* /vi/ *[obsol]* to loll or recline in a grand fashion, sit or stretch out with a regal air. - vn *gaṣṭana*; ava *migaṣṭan*.

اتجصطن *ʔitgaṣṭan* or *ʔiggaṣṭan* = *gaṣṭan*. - ava *mitgaṣṭan*.

ج ض ب
جضب *gaḍb* /n/ *[bot]* bird's-foot trefoil.

ج ض ع
جضع *gaḍaʕ (a)* **1** /vt/ to stretch out, lay down. *gaḍaʕu l-magruuḥ ʕal-ʃarḍ* they laid the wounded man on the ground. **2** /vi/ to lie down. *gaḍaʕ ʕas-siriir* he stretched out on the bed. - vn *gaḍaʕaan, gaḍʕ*; ava *gaaḍiʕ*; pva *magḍuuʕ*.
اتجضع *ʃitgaḍaʕ* or *ʃiggaḍaʕ* /vi/ **1** to recline at one's ease, loll. **2** to be laid down. - ava/iva *mitgiḍiʕ*.
انجضع *ʃingaḍaʕ* = *ʃitgaḍaʕ*. - ava/iva *mingiḍiʕ*.

ج ع ج ع
جعجع *gaʕgaʕ* /vi/ to brag, be vocal, make empty boasts or threats. - vn *gaʕgaʕa*; ava *migaʕgaʕ*.
جعجاع *gaʕgaaʕ, giʕgaaʕ* /n/ boaster, loudmouth, braggart.

ج ع د [1]
جعّد *gaʕʕad* /vt/ **1** to wrinkle, crinkle. **2** to curl (hair). *ʃaʕr[i] mgaʕʕad* curly hair. - vn *tagʕiid*; ava/pva *migaʕʕad*.
جعيدة *tagʕiida* /n pl *tagaʕiid*/ wrinkle.
اتجعّد *ʃitgaʕʕad* or *ʃiggaʕʕad* /vi/ **1** to be wrinkled. **2** to be curled (of hair). - vn *tagaʕʕud*↑; iva *mitgaʕʕad*.
تجعّد *tagaʕʕud*↑ /n pl *-aat*/ wrinkle.

ج ع د [2]
جعيدى *giʕeedi* /adj pl *-yya, gaʕayda*/ **1** pertaining to the Upper Egyptian tribe of the *gaʕayda*. — /n/ **2** *[obsol]* musician with drum or flute. **3** loafer, wastrel.

ج ع ر [1]
جعر *gaʕar (a)* /vi/ to make a loud unpleasant noise, bray, bellow (of a human being). *faakir ʃinnak ḥa-tlahii-ni b-giʕiir-ak* do you think you can distract me with your bellowing? - vn *giʕiir, gaʕr*; ava *gaaʕir*.
جعورة *gaʕuura* /n/ **1** /no pl/ loud unpleasant sound, bray, bellow. **2** /pl *-aat, gawaʕiir/ [slang]* mouth (as an organ producing unpleasant sounds). *ʃabuṭ gaʕuura* a loudmouth. *sidd ig-gaʕuura* shut your gob!
جعّيرة *guʕʕeera* = *gaʕuura*.
جعّر *gaʕʕar* = *gaʕar*. - vn *tagʕiir*; ava *migaʕʕar*.

ج ع ر [2]
جعران *guʕraan* /n pl *gaʕariin*/ scarab.

ج ع ر ر
جعرّ *giʕirr* /n/ **1** disgusting-looking person, eyesore. **2** good-for-nothing, a nobody.

ج ع ر ن
جعرن *gaʕran* **1** /vt/ to cause to swell, inflate (a part of the body). *ʃiḍ-ḍarba gaʕranit ʿurt-u* the blow made his forehead swell. **2** /vi/ to be or become swollen, swell. *raas-u gaʕranit mil-xabṭa* his head swelled from the knock. - vn *gaʕrana*; ava/pva *migaʕran*.
مجعرن *migaʕran* /adj/ raucous (of a voice).

ج ع ص
جعصة *gaʕṣa* /n/ pompous posture. *ʿaʕad ʕak-kanaba magʕuuṣ ḥittit gaʕṣa* he lounged on the sofa giving himself such airs!
جعاصة *gaʕaaṣa* /n/ self-importance, pomposity.
جعيص *giʕiiṣ* /adj pl *guʕaṣa*/ self-important, pompous.
أجعص *ʔagʕaṣ* /el/ **1** more/most self-important or pompous. *wala yhimm-i-ni ʔagʕaṣ giʕiiṣ fiikum* the biggest bully among you doesn't scare me. **2** *[slang]* better/best.
جعّاصى *gaʕʕaaṣi* /adj invar/ enormous, huge. *ʕalee ḥittit gitta gaʕʕaaṣi b-ʃakl* what a formidable body he has!
مجعوص *magʕuuṣ* /adj */ sitting with an air of self-importance. *magʕuuṣ fil-ʕarabiyya w-bitt[i] zayy il-ʿiʃta ʿaʕda gambu* lounging in the car like a big-shot with a smashing girl next to him.
اتجعص *ʃitgaʕaṣ* or *ʃiggaʕaṣ* /vi/ to recline or sit with an air of self-importance. - ava *mitgiʕiṣ*.
انجعص *ʃingaʕaṣ* = *ʃitgaʕaṣ*. - ava *mingiʕiṣ*.

ج ع ض ى ض
جعضيض *guʕḍeeḍ* /n/ *[bot]* sow-thistle (Sonchus oleraceus).

ج ع ف ر
جعفرى *gaʕfari* /n/ left-over food (in the jargon of waiters).

ج ع ل
جعل *gaʕal (a)* /vt/ **1** to set aside, earmark. *gaʕalt[i]-lu xamsiin ʿirf in laʿaa* I promised him fifty piastres if he found it. **2** to cause to be (usually of God). *ʔallahumma ʃigʕal-u xeer* may God make it turn out well! *ya rabb[i] ʃigʕal kalam-na xafiif ʕala ʿalb-u-hum* Lord, make our words acceptable to them! *ʃil-mayya magʕuula lif-furb* water is made for drinking. — /vi/ **3** to pretend. *gaʕalit ʃinnaha lli dafaʕit* she made out that it was she who paid. - ava *gaaʕil*; pva *magʕuul*.
اتجعل *ʃitgaʕal* or *ʃiggaʕal* /vi/ to be made. - iva *mitgiʕil*.

انجعل ʔingaɛal = ʔitgaɛal. -iva *mingiɛil*.

ج ع ل ص
جعلص *gaɛlaṣ* /vi/ to become fat, become podgy. *ɛayyil-ha gaɛlaṣ min kutr il-ʔakl* her child got (too) fat from over-eating. -vn *gaɛlaṣa*; ava *migaɛlaṣ*.
جعلص *guɛluṣ* /n/ *[abus]* fatty, fatso.
جعلوص *gaɛluuṣ* /adj pl *gaɛaliiṣ*/ fat, plump, podgy.
اتجعلص ʔitgaɛlaṣ or ʔiggaɛlaṣ = *gaɛlaṣ*.

ج ع م
جعم *gaɛam (i)* /vt/ **1** to force, stuff (s.th. especially food into s.o. or s.th.). *gaɛam il-luqma f-buqq-u w-bil-ɛafya qidir yiblaɛ-ha* he stuffed such a big bite of food into his mouth that he could hardly swallow it. **2** to compress, squeeze. *gaɛamit buqgit il-huduum taḥt[i] baṭ-ha* she held the bundle of clothes tight under her arm. -vn *gaɛm*; ava *gaaɛim*; pva *magɛuum*.
جعمة *gaɛma* /pl *-aat*/ instance noun of *gaɛm*.
اتجعم ʔitgaɛam or ʔiggaɛam /vi/ **1** to be compressed, be squeezed. **2** to be stuffed or stuff oneself (with food). *ʔiggaɛamit mil-ʔakl* she ate till she was fit to burst. -ava/iva *mitgiɛim*.

ج ع م ص
جعمص *gaɛmaṣ* /vi/ to sit with a pompous air. -vn *gaɛmaṣa*; ava *migaɛmaṣ*.
اتجعمص ʔitgaɛmaṣ or ʔiggaɛmaṣ /vi/ to behave haughtily, act with an air of self-importance. -ava *mitgaɛmaṣ*.

ج غ ر ف ي
جغرافية *guɣrafya* <It *geografia*> /n/ geography.
جغرافى *guɣraafi* /adj/ geographical.

ج غ غ
جغة *giɣɣa* /nonce word/ sound made in imitation of a baby either to play with a baby or to mock someone for behaving babyishly.

ج ف ت
جفت *gift* <T *çift*> /n pl *gufuut*/ **1** forceps, tweezers. **2** clamp. *gift[i] furyaani* arterial clamp. -also *fift*.
جفتة *gifta* /n pl *-aat*/ lip inset (in sewing).

ج ف ر[1]
جفر *gafar* /n/ camel pox.
جفّر *gaffar* /vi/ to show signs of camel pox, be afflicted with camel pox. -vn *tagfiir*; ava *migaffar*.

ج ف ر[2]
جفر *gafr: ɛilm il-gafr↑* fortune-telling, through the study of the letters of a person's name in combination with astrology.
جفرة *gafra: ḥafra gafra* barren and uninhabited area of land, desolate place, area of ruins.

ج ف ر ت ت
جوفريّت *gufritt* <Fr *gaufrette*> /coll n/ wafer biscuit(s).
جوفريّتة *gufritta* /unit n, pl *-aat*/ a wafer biscuit.
جوفريّتاية *gufrittaaya* /unit n, pl *-aat*/ = *gufritta*.

ج ف ف
جفّ *gaff[1] (i)* /vi/ to dry, become dry. -vn *gafafaan, gafaaf*; ava *gaff, gaaff, gaafif*.
جافّ *gaff[2], gaaff* /adj/ dry. *faɛr[i] gaff* dry hair. *baṭṭariyya gaffa* dry-cell battery. *ḥood gaff* dry dock. ‖*qalam gaff* ball-point pen. -*radd[i] gaff* curt answer. -*kalaam gaff* rude talk.
أجفف ʔagfaf /el/ more/most dry.
أجفّ ʔagaff = ʔagfaf.
جفاف *gafaaf* /n/ **1** dryness. **2** *[obsol]* dry period in the winter when the Nile is low and irrigation activity ceases. **3**↑ drought.
جفّف *gaffif* /vt/ **1** to dry. *gaffif dimuuɛ-ak* dry your tears. **2** to desiccate. *laban migaffif* dried milk. -vn *tagfiif*; ava/pva *migaffif*; pva *migaffaf*↑.
اتجفّف ʔitgaffif or ʔiggaffif /vi/ to be dried. -iva *mitgaffif*.

ج ف ن
جفن *gifn* /n pl *gufuun, ʔagfaan*/ eyelid. *ʔiltihaab il-gifn [path]* conjunctivitis. ‖*naam malw[i] gufuun-u* he slept his fill, he had a good sleep.

ج ف و
جفا *gafa[1] (a)* /vt/ to shun, avoid (s.o.). *ma-fii-ʃ ʔamarr[i] min ḥabiib yigfaa-k* nothing is more bitter than being rejected by one's sweetheart. ‖ *ʔin-noom gafaa-ni* sleep eluded me. -vn *gafa*; ava *gaafi*; pva *magfi*.
جفا، جفاء *gafa[2]* /n/ hardening of the emotions. *ʔil-buɛd[i] gafa [prov]* remoteness hardens one's feelings. *gafaa-k wala xluww[i] daar-ak [prov]* not being on speaking terms with you is better than having you leave home altogether.
جافى *gaafi* /adj pl *gafyiin, gufaah*/ rough, harsh, hard (of temperament). *naas gufaat iṭ-ṭabɛ* crude people.
جفوة *gafwa* /n/ aversion, antipathy, estrangement. *fii gafwa benhum* they have a mutual aversion to one another.

جافا *gaafa* /vt/ to turn away from, shun. *ʕin-noom fi-bʕaad-ak yigafii-ni* sleep in your absence eludes me. *ʕilli ygafii-k gafii [prov]* (he who rejects you, reject him) give as good as you get. -vn *migafiyya*; ava *migaafi*.

اتجافى *ʕitgaafa* or *ʕiggaafa* /vi/ to shun one another. *fil-ʕawwil itgaafu w-dilwaqti tṣaafu* ≈ at first they were brusque with each other but now they are good friends. -vn *tagaafi*; ava *mitgaafi*.

ج ك ا ر

جاكار *jakaar* <prop n *Jacquard*> /n/ **1** jacquard weave, a process by which intricate designs are woven into a fabric. **2** jacquard loom. **3** jacquard, fabric produced on a jacquard loom.

ج ك ت ت

جاكيتة، جاكتّة *jakitta* (also *zakitta*↓) <It *giacchetta*> /n pl *-aat*/ jacket, cardigan.

ج ك ر see ج ك ا ر: *jakaar*

ج ل ا

جلا *gala*[1]: *gala gala* **1** /interj/ cry of conjurers when performing tricks ≈ hey presto! **2** /coll n/ conjurers, magicians.

ج ل ا ت ى

جيلاتى *jilaati* <It *gelato*> /n/ ice cream.

ج ل ب [1]

جلب *galab*[1] *(i)* /vt/ to attract, stimulate, bring about. *ʕil-ḥigaab da yiglib il-maḥabba* this amulet wins love. *yaama galabit lina maṣaayib* how many catastrophes she's brought on us! - vn *galb, galabaan*; ava *gaalib*; pva *magluub*.

جلبة *galba* /n pl *-aat*/ uncouth person. *ʕeeh il-galba s-sooda di lli gibt-a-ha mʕaak* what a dreadful lout you've brought with you!

جلبة *gilba* /n pl *gilab, gilbaat*/ **1** *[mech]* bush, bushing. **2** ferrule. – /adj invar and pl *gilab*/ **3** glib (of a person).

جلب *galab*[2] /adj invar/ **1** unbroken (of a horse). **2** uncouth, rough (of a person).

جلبة *galaba*↑ /n/ uproar, clamour. *fii galaba fdiida fiʃ-ʃaariʕ bi-sabab il-muruur* the traffic is causing a tremendous noise in the street.

جلاّب *gallaab* **1** /n */ stimulator, bringer about. *gallaab maṣaayib* causer of disaster. ‖*gallaab il-yasiir* the one who set free the captive and brought him home (epithet of el-Sayyid el-Badawi). **2** /adj */ attractive, winning.

اتجلب *ʕitgalab* or *ʕiggalab* /vi/ to be brought, be brought about. - iva *mitgilib*.

انجلب *ʕingalab* = *ʕitgalab*. - vn *ʕingilaab*; iva *mingilib*.

استجلب *ʕistaglib* /vt/ to gain, win, procure, obtain. *ḥasab ʕaʕmal-ku ḥa-tistaglibu maḥabbit in-naas ʕaw karahiyyit-hum* you will earn people's love or their hatred according to your actions. - vn *ʕistiglaab*; ava *mistaglib*.

ج ل ب [2]

جلابيّة *gallabiyya* (also *galabiyya*) /n pl *galaliib*/ galabiya, full-length loose gown (the traditional dress of Egyptian men and women). *gallabiyya baladi* man's gown with wide sleeves and a plain neck opening, worn over a *sideeri* (q.v.) (see Pl.F, 5). *gallabiyya frangi* man's gown with cuffs, collar and a buttoned neck opening. *gallabiyya b-wisṭ*↓ woman's waisted dress. *gallabiyya samra* woman's black galabiya worn over indoor clothes when outside the house (see Pl.F, 11).

ج ل ب [3] see ج ل ل ا ب: *gullaab*

ج ل ب ا ن

جلبان *gulbaan* /n/ variety of vetch (Lathyrus satirus).

ج ل ب ن –

جلبنيز *gilibineez* /n/ string wrapping around pipes for guarding against chipping.

ج ل ب ه –

جلبهار *gulbahaar* <T *gülbahar* from P> /n/ a kind of backgammon.

ج ل ت see ج ل ا ت ى: *jilaati*

ج ل ت ر ب

جلتراب *gilitrab* <Engl *gully-trap*> /n pl *-aat*/ *[plumb]* trap in the gully or central drain of a building.

ج ل ت ى ن [1]

جيلوتين *gilutiin* <Fr> /n/ (paper-cutting) guillotine.

ج ل ت ى ن [2]

جلتين *jilatiin* <Engl> /n/ gelatine.

جلاتين *galatiin* /coll n/ gelatinous sweet(s) cut into cubes.

جلاتينة *galatiina* /unit n, pl *-aat*/ a piece of *galatiin*.

جيلاتينة *jilatiina* <It *gelatina*> /n/ **1** gelatine. **2** *[theat]* gelatine slide.

جيلاتيناية *galatinaaya* /unit n, pl *-aat*/ = *galatiina*.

ج ل ج ل

جلجل *galgil* /vi/ to resound, reverberate. *ʂot-ha galgil fil-beet* her voice rang through the house. *ʕir-raʕd*^{i} *galgil* the thunder rumbled. - vn *galgala*; ava *migalgil*.

جلجل *gilgil* (also *gingil*) /n pl *galaagil*/ jingle bell. *fiḍiiḥa b-galaagil* a scandal with bells on, a sensational scandal.

ج ل ج ن –

جلجنايت *gilignaayit* <Engl> /n/ gelignite.

ج ل ح

جلحى *galḥa* /fem adj/ bald. *raas-u galḥa* he is bald-headed.

ج ل ح ف

مجلحف *migalḥaf* /adj */ **1** rough-skinned. **2** oafish.

ج ل خ

جلخ *galx* /n/ **1** (also *ḥagar galx*) grindstone, whetstone. **2** encrusted grease or dirt. — /adj invar/ **3** uncouth, boorish, uncivil.

جلخة *galxa* /n pl *-aat*/ grindstone, whetstone.

جلاخة *gallaaxa* /n pl *-aat*/ grindstone, whetstone.

جلّخ *gallax* /vt/ **1a** to grind. *tagliix ʕadasaat* lens grinding. **1b** to sharpen, whet. *raaḥ yigallax is-sikkiina* he went to sharpen the knife. **2** to smear or encrust with dirt or grease. — /vi/ **3** to become dull and stupid (especially of the brain). *muxx-i gallax* ≈ I can hardly think clearly. **4** to become dirty or greasy. *kull*^{i} *gittit-u wi-hduum-u gallaxu mil-ʕaraq wil-wasaaxa* all his body and clothes were covered with sweat and dirt. - vn *tagliix*; ava/pva *migallax*.

اتجلّخ *ʔitgallax* or *ʔiggallax* /vi/ to be sharpened, be whetted. - iva *mitgallax*.

ج ل د ^{1}

جلد *galad*^{1} *(i)* /vt/ to whip, flog. *ḥ-aglid-ha quddaam in-naas kull-u-hum* I'll flog her in front of everybody. - vn *gald*; ava *gaalid*; pva *magluud*.

جلدة *galda* /unit n, pl *-aat, gulad*/ stripe, lash. *galaduu rubʕumiit galda* they gave him four hundred lashes.

جلد *gild* /n pl *guluud*/ **1** skin, hide, leather. *gild il-xaruuf* sheepskin. *gild-u xifin* its skin is rough. *ḥuqna taḥt il-gild* subcutaneous injection. *gild*^{a} *ʕala ʕaḍm* skin and bone. ‖*gild*^{i} *ḥurr* genuine leather. - *gild*^{i} *lammiiʕ* patent leather. - *gild*^{i} *ʔamrikaani* cowhide. - *maat fi-gild-u* he was scared stiff. - *nafad* (or *xiliṣ*) *bi-gild-u* he escaped with his life. - *ʕidim il-gild wis-saqaṭ* ≈ he lost everything. - *gild*^{i} *nimr* garden mimulus. **2** outer membrane (of a plant), bark (of a tree). **3** brake-block (of a bicycle). *gooz gild bil-ḥadiid* a pair of brake-blocks in their shoes.

جلدة *gilda* /n/ **1** /unit n, pl *-aat*/ **1a** piece of skin, hide, leather or rubber. ‖*ʕala l-gilda* on one's uppers, broke. **1b** strop. **2** /pl *-aat, gilad*/ **2a** binding (of a book). **2b** jacket, cover (of a book). **2c** *[plumb]* (tap) washer. — /adj invar/ **3** miserly.

جلدى *gildi* /adj */ **1** pertaining to the skin. *ʔamraaḍ gildiyya* skin diseases. **2** made of leather.

جلداية *gildaaya* /n pl *-aat*/ a piece of skin, hide, leather or rubber.

جلاّد *gallaad* /n */ **1a** flogger. **1b** executioner. **2** dealer in hides. **3**: *waraq gallaad* paper used for book-jackets.

اتجلد *ʔitgalad* or *ʔiggalad* /vi/ to be whipped, be flogged. - iva *mitgilid*.

انجلد *ʔingalad* = *ʔitgalad*. - iva *mingilid*.

جلّد *gallid* **1** /vt/ to put a cover on, bind (a book). *fii talamza tḥibb*^{i} *tgallid kararis-ha waraq ʔaḥmar* some school children like to cover their copybooks with red paper. *ʔarxaṣ-lak tiftiri ktaab ʕadiim wi-tgallid-u* it'd be cheaper for you to buy a second-hand book and have it bound. **2** /vi/ to become leathery. *ʔil-ʕeef gallid* the bread went as hard as leather. - vn *tagliid*; ava/pva *migallid*.

مجلّد *migallid* /n */ book-binder.

مجلّداتى *migallidaati* /n pl *-yya*/ book-binder.

اتجلّد *ʔitgallid*^{1} or *ʔiggallid*^{1} /vi/ to be covered, be bound (of books). - iva *mitgallid*.

ج ل د ^{2}

جلد *galad*^{2}↑ /n/ stamina, endurance. *nifs-u yiftaval bass*^{i} *ma-ʕanduu-ʃ galad* he has the desire to work but not the stamina.

جلد *gilid* /adj pl *gulaad*/ long-suffering, steadfast.

جلادة *galaada* /n/ stamina, endurance.

اتجلّد *ʔitgallid*^{2} or *ʔiggallid*^{2} /vi/ to endure, suffer, bear (pain, hardship etc.). - vn *tagallud*↑; ava *mitgallid*.

ج ل ز

جلّز *galliz* <Engl> /vt/ to glaze (pottery). - vn *tagliiz*; ava/pva *migalliz*.

اتجلّز *ʔitgalliz* or *ʔiggalliz* /vi/ to be glazed (of pottery). - iva *mitgalliz*.

ج ل س

جلس *galas*↑ *(i)* /vi/ to sit down. *galasu yitbaḥsu* they sat down to have a discussion. ‖*ʔiid-u galsa*↓ he has a

steady hand (e.g., in shooting). - vn *guluus*ˀ, *galasaan*; ava *gaalis*.

جلوس *guluus* /vn/ ‖ *ʕoodit guluus* sitting room. - *raqam guluus* seat number (in an examination). - *ʕiid il-guluus (il-malaki)* anniversary of the coronation.

جالس *gaalis*[1] /adj/ thick, viscous (of fluids).

جلسة *galsa* /n pl *-aat, gilas*/ **1a** session, sitting. *ʕil-qaadi ʕaggil il-galsa* the judge postponed the hearing. ‖ *galsit kahraba* one session of electric shock treatment. - *qumaaf gilas* material used for the top covering of chairs, sofas etc. **1b** seance. **2** window-sill. **3** *[euphem]* lavatory seat.

جليس *galiis* /n pl *gulasa, gullas*/ companion. *galiis il-muluuk [obsol]* companion of kings ≈ a man of consequence.

مجلس *maglis* /n pl *magaalis*/ board, council. *raʕiis il-maglis* chairman of the board. *maglis qarawi* village council. *maglis il-wuzara* the Cabinet. *maglis ʕaskari* court martial. ‖ *ʕamal maglis [euphem]* to go to the lavatory.

جالس *gaalis*[2] /vt/ to attend the councils of. *ʕibn-i baqa kaatib kibiir wi-baqa ygaalis il-ʕakaabir* my son has become a big writer and hob-nobs with the great. - vn *migalsa*; ava *migaalis*.

اتجالس *ʕitgaalis* or *ʕiggaalis* /vi/ **1** to keep company, have social intercourse (with s.o.). *dayman yiḥibbⁱ yitgaalis maʕaana* he always likes to be in our company. **2** (impersonal) passive of *gaalis*. *raagil la yitgaalis wala yitxaaṭib* a man one wouldn't wish to keep company with or (even) speak to. - ava/iva *mitgaalis*.

ج ل س ر

جلسرين *gilisriin* <prob Fr> /n/ glycerine.

ج ل ش see ج ل ل ا ش : *gullaaf*

ج ل ص see ج ل و ص : *galuuṣ*

ج ل ط[1]

جلط *galaṭ (u)* /vt/ **1** to graze, scrape, abrade. *galaṭⁱ ʕiid-i* I scraped the skin off my hand. **2** to rub off, scrape off. *ma-tuxluṭ-ʃ il-buuya min ʕal-baab* don't rub the paint off the door! - vn *galṭ*; ava *gaaliṭ*; pva *magluuṭ*.

جلطة *galṭa*[1] /n pl *-aat*/ **1** /inst n/ a scraping. **2** raw place, scrape.

اتجلط *ʕitgalaṭ* or *ʕiggalaṭ* /vi/ to be scraped raw. - iva *mitgiliṭ*.

انجلط *ʕingalaṭ* = *ʕitgalaṭ*. - iva *mingiliṭ*.

جلّط *gallaṭ* /vt/ **1** to scrape, rub off (a surface layer of s.th.). *gallaṭit il-ʕagiin min ʕidee-ha* she scraped the dough off her hands. **2** to smear (s.th. with s.th.). *gallaṭ il-garḥⁱ bil-marḥam* he smeared the wound with ointment. - vn *tagliiṭ*; ava/pva *migallaṭ*. see further under ج ل ى ط

اتجلّط *ʕitgallaṭ*[1] or *ʕiggallaṭ*[1] /vi/ to be scraped or rubbed off extensively or repeatedly. - iva *mitgallaṭ*.

ج ل ط[2]

جلطة *galṭa*[2] /n pl *-aat*/ **1** (blood) clot. **2** thrombosis. *galṭa fil-ʕalb* coronary thrombosis.

اتجلّط *ʕitgallaṭ*[2] or *ʕiggallaṭ*[2] /vi/ *[path]* to clot, coagulate (of blood). - vn *tagalluṭ*; ava *mitgallaṭ*.

ج ل ف[1]

جلف *galaf*[1] *(i)* /vt/ to draw, pull (into wire or filaments). - vn *galf*; ava *gaalif*; pva *magluuf*.

جلف *galf* /n/ machine for drawing wire.

اتجلف *ʕitgalaf*[1] or *ʕiggalaf*[1] /vi/ passive of *galaf*. -iva *mitgilif*.

ج ل ف[2]

جلف *galaf*[2] *(i)* /vi/ to scrape, scrape (the top) off. *galaf ʕiid-u* he grazed his hand. *galaft il-ʕiʃra min ʕag-garḥ* you rubbed the scab off the wound. - vn *galafaan*; ava *gaalif*; pva *magluuf*.

جلف *gilf* /adj pl *ʕaglaaf*/ crude, low-class, uncouth, vulgar (of people).

أجلف *ʕaglaf* /el/ more/most crude, low-class etc.

جلافة *galaafa* /n/ vulgarity, crudeness (in behaviour or speech). *tiḥissⁱ bil-galaafa fi-taṣarrufaat-u w-fi-kalaam-u* you feel how uncouth his behaviour and speech are.

اتجلف *ʕitgalaf*[2] or *ʕiggalaf*[2] /vi/ to be scraped, be scraped off. - iva *mitgilif*.

استجلف *ʕistaglif* **1** /vt/ to select for vulgarity or crudeness. *raaḥ istaglif-lu waḥda w-baʕat-ha tixdim ʕumm-u* he picked a low-class woman and sent her to be his mother's servant. **2** /vi/ to act in a vulgar or uncouth way. *baṭṭal tisatglif fi-kalaam-ak* stop talking like a lout! - vn *ʕistiglaaf*; ava *mistaglif*.

ج ل ف ن

جلفنة *galfana* <prop n *Galvani*> /n/ galvanizing.

جلفن *galfin* /vt/ to galvanize. - vn *galfana*; ava/pva *migalfin*.

جلفانو *galfaanu* /n/ galvanometry.

جلفانى *galfaani* /adj */ galvanic.

اتجلفن *ʕitgalfin* or *ʕiggalfin* /vi/ to be galvanized. - iva *mitgalfin*.

ج ل ك و ز
جلوكوز *gulukooz* <prob Fr> /n/ glucose.

ج ل ل [1]
جلّ *gall (i)* **1** /vt/ to respect, honour. *ʕana ʕagill-u li-llaah fi-li-llaah* I respect him unfeignedly. — /vi/ **2** / only in perf/ to be or become great or sublime (usually of God). *ʕallaah ɛazz[i] w-gall* or *ʕallaah gall[i] galaal-u* God, Mighty and Glorious is He. ‖*gamaal gall il-xaaliq* beauty that makes one praise the Creator. - *gall il-mulk* to a great extent, in great numbers, in great sizes, etc., as in *bint[i] ḥilwa gall il-mulk* an extremely pretty girl (as befitting God's creation), *ɛaalam gall il-mulk* an enormous crowd (such as is only possible in God's kingdom). **3**↑ to be too great, be too difficult (for s.th.). *ḥadsa tgill[a] ɛan il-waṣf* an incident that defies description. - vn *galaal, galaala*.
جلال *galaal* /n/ grandeur, sublimity, awesomeness. *galaal il-manẓar* the grandeur of the scene. *wi-ḥaqq[i] galaal illaah* by God's sublimity! (a strong oath).
جلالة *galaala* /n/ sublimity, loftiness. *galalt-ak* your Majesty. *ṣaḥbit il-galaala* Her Majesty. *galaalit il-malik* His Majesty the King. ‖*bi-galalt-u* or *bi-galaalit ɛadr-u [iron]* ≈ the high and mighty, the great, as in *sii manṣuur bi-galalt-u* the mighty Mr Mansur.
جليل *galiil* **1** /n/ Glorious, Most Sublime (epithet of God). **2** /adj pl *ʕagilla*/ honourable, venerable. *ʕil-ɛuḍw il-galiil* the honourable member.
أجلّ *ʕagall*↑ /vt/ to respect, honour. - vn *ʕiglaal*; ava *mugill*.

ج ل ل [2]
جلّة *gilla* /n/ **1** dung (of animals). **2** dung mixed with straw, dried and used for fuel.
جلّالة *gallaala* /n/ **1** woman dung-gatherer. **2** /coll n/ chickens left to scavenge from dung heaps.
جلّل *gallil[1]* /vt and vi/ to defecate (of cattle). - vn *tagliil*; ava *migallil*.
اتجلّل *ʕitgallil[1]* or *ʕiggallil[1]* /vi/ to be defecated (by cattle). - iva *mitgallil*.

ج ل ل [3]
جلال *gilaal* /n pl *-aat*/ **1** camel-saddle blanket made of goat wool. **2** winter blanket made of sacking for an animal.
جلّل *gallil[2]*↑ *(i)* /vt/ to cover, drape. *gallilit ṣuurit ibn-a-ha l-mayyit bis-sawaad* she draped her dead son's picture with a dark cloth (as a sign of mourning). - vn *tagliil*; ava/pva *migallil*.
اتجلّل *ʕitgallil[2]* or *ʕiggallil[2]* to be covered or draped (especially with black cloth as a sign of mourning). - iva *mitgallil*.

ج ل ل [4]
جلّة *gulla* /n pl *-aat/ [athl]* shot.
مجلّة *magalla* /n pl *-aat*/ magazine, journal, periodical.

ج ل ل اب
جلاب *gullaab* <P *gulâb*> /n/ rose-flavoured syrup. ‖*sukkar gullaab* sugar sedimented in molasses, often moulded into candies.

ج ل ل اش
جلاش *gullaaj* <P *gulâj*> /n/ **1** sheets of thin pastry. **2** dish, either sweet or savoury, made of layers of this pastry.

ج ل م ب
جلمبو *galambu: ʕabu galambu* /n invar/ **1** crab, crabs. **2** *[slang]* **2a** ugly person, ugly people. **2b** policeman, policemen, fuzz.

ج ل ن د
جلند *galand* <Engl> /n pl *-aat/ [mech]* gland, lantern ring.

ج ل ن ف
جلنف *galanf, galamf* /n pl *-aat*/ oaf, boor, clod.

ج ل و ص
جالوص *galuuṣ* /n pl *gawaliiṣ*/ lump of mud.

ج ل و ل
جلول *galwil* /vt/ to brush with a broom or one's hand (large pieces of, e.g., broken sugar, stones) from the surface of a pile of s.th. smaller. *galwil il-ḥaṣa da mir-ruzz* pick that grit out of the rice. - also *garwil, galwin*. - vn *galwala*; ava/pva *migalwil*.
اتجلول *ʕitgalwil* or *ʕiggalwil* /vi/ passive of *galwil*. - also *ʕitgarwil, ʕitgalwin*. - iva *mitgalwil*.

ج ل و ن [1]
جلون *galwin* /vt/ to brush with a broom or one's hand (large pieces of, e.g., broken sugar, stones) from the surface of a pile of s.th. smaller. - also *garwil, galwil*. - vn *galwana*; ava/pva *migalwin*.
اتجلون *ʕitgalwin* or *ʕiggalwin* /vi/ passive of *galwin*. -also *ʕitgarwil, ʕitgalwil*. -iva *mitgalwin*.

² (ج ل و ن)
جالون *galoon¹* <Fr *galon*> /n/ **1** /no pl/ galloon, braid. **2** /pl *-aat*/ trimming of galloon.
جالون *galoon²* or *galuun* <Fr *gallon*> /n pl *-aat*/ **1** gallon. **2** one-gallon can.

ج ل و ى ن
جلاوين *galaween* /n/ **1** thistle-like plant (Sonchus loeraceus). **2** dung (of cattle).

¹ ج ل ى
جلى *gala² (i)* /vt/ **1** to polish, burnish (e.g., metal). **2** to exibit (a bride adorned in her finery before the bridal procession). *leelit il-galwa* wedding night. **3** to cause to be eloquent. *ʕif-furb¹ b-yigli l-waaḥid* drinking makes one eloquent. - vn *galy, gila, galwa*; ava *gaali*; pva *magli*.
جلا *gila* /n/ polish.
جلية *ǧalya* /inst n, pl *-aat*/ a polish, a polishing.
جلاّء، جلاء *galla¹* /n pl *gallayiin*/ one who polishes metal, marble, floor tiles etc.
انجلى *ʕingala* /vi/ **1** to be polished or burnished (of metal etc.). **2** to become eloquent. *ʕingaleet fil-ḥadiis* I sparkled in the conversation. **3↑** to be or become manifested or revealed, manifest or reveal oneself. *ʕil-ḥaqiiqa ngalit* the truth came to light. **4↑** to result (in s.th.). *ʕingalat il-maǧraka ǧan ʔatileen* the battle ended with two people dead. - ava/iva *mingili*.
اتجلى *ʕitgala* or *ʕiggala* = *ʕingala*. - ava/iva *mitgili*.
جلى *galla²* /vt/ **1** to clarify, explain. **2** to polish. **3** plate with metal. - vn *tagliyya*; ava/pva *migalli*.
اتجلّى *ʕitgalla* or *ʕiggalla* /vi/ **1a** to be or become revealed or manifest. *rabb-i-na yitgalla ǧaleena b-raḥmit-u* may God show us His mercy! *ʕil-ǧadra tgallit lin-naas fiz-zatuun* the Virgin Mary appeared to people in Zaytoun. **1b** *[Chr]* to be transfigured. **2** to be polished. **3** to be plated with metal. - vn *tagalli*; ava/iva *mitgalli*.
التجلّى *ʕit-tagalli* /n/ *[Chr]* the transfiguration (of Christ).
متجلّى *mutagalli↑* /n/ One who manifests Himself (epithet of God). *ya mutagalli ǧala ǧabiid-ak ya rabb* O God who hast manifested Thyself to Thy servants. *ya rabb¹ ya mutagalli ʕihlik il-ǧusmalli* (cry of the masses in Cairo against the Ottoman rulers) God! who art manifest in Thy deeds, destroy the Ottoman!
استجلى *ʕistagla* /vt/ to seek an explanation of, discover, clarify. *laazim nistagli sirr il-mawqif* we should discover the essential element in the situation. - vn *ʕistigla, ʕistiglaa↑*; ava *mistagli*.

² ج ل ى
جلى *gala³ (i)* **1** /vt/ to oust, dislodge. **2** /vi/ to depart, evacuate. - vn *gala, galaa↑*; ava *ǧaali*; pva *magli*.
جلاء *galaa↑* /n/ evacuation. *ǧiid ig-galaa↑* Evacuation Day (in commemoration of the British evacuation from Egypt on 18th June 1954). *kubri g-galaa↑* Evacuation Bridge (between the southwest tip of Guezira and Guiza).
جالية *galya* /n pl *-aat*/ expatriate community.
جلّى *galla³* /vi/ to miss a target, miss a hit. - vn *tagliyya*; ava *migalli*.

³ (ج ل ى)
جلى *jili* <Engl> /n/ (fruit) jelly dessert.
جالى *gali* <Engl> /n/ (ship's) galley.

ج ل ى ر د
جلياردة *galyarda* <prop n *Gaillard*> /n/ *[bot]* Gaillardia, blanket-flower.

ج ل ى ط
جليط *galyaṭ* /vt/ **1** to make greasy, make messy with grease. *ʕid-dihn¹ galyaṭ ṣawabǧ-ak* the fat made your fingers greasy. — /vi/ **2** to become greasy. **3** to behave rudely. *leeh tigalyaṭ maǧaa bif-ʃakl-i-da* why are you so impolite to him? - vn *galyaṭa*; ava/pva *migalyaṭ*.
جلياط *gilyaaṭ* /adj pl *galayṭa*/ vulgar, boorish.

¹ ج م ب
جمب *gamb¹* <prob Engl *gum*> /n pl *-aat*/ gum-shield.

² ج م ب see **ج ن ب**: *gamb², gamba, gambiyya*

ج م ب ا ز
جمباز *gumbaaz* <P *jân-bâz*> /n/ gymnastics. *gumbaaz il-ʕeel* equestrian gymnastics.

ج م ب ر ى
جمبرى *gambari* <It *gamberi*> /coll n/ shrimp(s), prawn(s).
جمبرياية *gambariyaaya* /unit n, pl *gambariyaat*/ a shrimp, a prawn.

ج م ب ش
جمبش *gumbuʃ* <T *cümbüş*> /n/ *[mus]* type of steel-stringed instrument.

¹ ج م ج م
جمجمة *gumguma* /n pl *gamaagim*/ skull.

²ج م ج م
جمجم *gamgim* /vi/ to mutter. -vn *gamgama*; ava *migamgim*.

ج م ح
جمح *gamaḥ (a)* /vi/ to start forward, bound forward (of a horse). ‖*ravabaat gamḥa↑* unbridled passions. -vn *gumuuḥ*; ava *gaamiḥ*.

¹ج م د
جمد *gimid (a)* /vi/ **1** to become stiff or hard, congeal. *ʕil-mayya gimdit* the water froze. **2** to become strong. *ʕigmad* be strong! be resolute! *ʒaḍalaat-i gimdit* my muscles grew strong. **3** to become miserly. *ʕiid-u gimdit* he became tight-fisted. -vn *gumuud, gamadaan*; ava *gaamid*.
جامد *gaamid* /adj */ **1** stiff, hard, inflexible. *kawitʃ[i] gaamid* hard rubber. *rabaṭt-u rabṭa gamda* I tied it tightly. **2** strong, robust, vigorous. *ṣiḥḥa gamda* robust health. *ʒeela gamda* a powerful family. *-ʠalb-u gaamid* he is courageous. *-muxx-u gaamid* (1) he's intelligent. (2) he's inflexible. **3** miserly, mean. *naas gamdiin* tight-fisted people. **4** intense, extreme, existing in a high degree. *ʒalʠa gamda* a sound beating. *maxaṣ gaamid* dreadful stomach-ache. *ḥumma gamda* a high fever. *ḍooʕ gaamid* intense light. -/adverbially/ *tiʠallibii-hum fi-baʒḍ[i] gaamid* you stir them together hard.
أجمد ʕagmad elative of *gaamid*.
جماد *gamaad[1]* /n/ inanimate matter. *ʕinta ma-bi-tḥiss[i]-ʃ -ʕinta gamaad* do you have no feelings, are you made of stone? ‖*ḥayawaan ʕaw nabaat ʕaw gamaad* animal, vegetable or mineral. *-da gamaad (ʕawwal)* he's tight-fisted (cf *gamaad[2]*).
جمودية *gumudiyya* /n/ **1** hardness, solidity. **2** meanness.
جمودي *gammuudi* /adj invar/ very miserly.
جمّد *gammid* /vt/ **1** to make stiff or hard. **2** to strengthen. *gammid ʠalb-ak* take courage! **3** to change (an amount of small change) into units of larger denomination. *gammidt[i] talaata gneeh* I changed three pounds of coins (or low denomination notes) for pound notes. **4a** *[finan]* to freeze (bank loans or liquid assets). **4b** to fix (rents, prices etc.) usually by government order. *tagmiid il-ʕarṣida* freezing of funds. — /vi/ **5** to hold tightly. *gammid ʒal-kursi* hold tight to the chair! **6** to freeze, solidify. *ʕil-laban gammid* the milk froze solid. -vn *tagmiid*; ava/pva *migammid*.
اتجمّد *ʕitgammid* or *ʕiggammid* /vi/ **1** to become or be made hard or stiff. **2** to be collected, be accumulated (of money). *ʕitgammid liyya ʠirfeen ṭayyibiin fil-bank* ≈ I've saved a lot of money in the bank. *ʕitgammidit ʒalee diyuun kitiira* his debts accumulated. -vn *tagammud↑*; ava/iva *mitgammid*.
استجمد *ʕistagmid* /vt/ to select for hardness. -ava *mistagmid*.

²ج م د
جمادى *gamaad[2]: gamaad (il-) ʕawwal* fifth month of the Muslim year. *gamaad (il-) ʕaaxar* or *gamaad it-taani* sixth month of the Muslim year. ‖*gamaad ʕawwal* very mean, miserly.

ج م د ا ن
جمدانة *gamadaana* <It *damigiana*> /n pl *-aat*/ carboy.

¹ج م ر
جمر *gamar (u)* /vt/ **1** to bury in live coals. **2** to cause much trouble or worry to (s.o.). *da gamar-ni b-faḍayḥ-u* he drove me to distraction with his scandalous behaviour. -vn *gamaraan*; ava *gaamir*; pva *magmuur*.
جمر *gamr[1]* /coll n/ ember(s), live coal(s).
جمرة *gamra[1]* /unit n, pl *-aat*/ an ember, a live coal. *da ṭifl[i] ṣ̌ayyar ma-yfarraʠ-ʃ[i] been it-tamra wil-gamra* (he's such a baby he can't tell the difference between a dried date and a burning coal) he is totally lacking in discernment. ‖ *ʕig-gamra l-xabiiṣa* anthrax.
جمراية *gamraaya* /unit n, pl *-aat*/ a small piece of ember or live coal.
مجمرة *magmara* /n pl *-aat, magaamir*/ a hollow in the ground or a pot (made of clay or metal) to hold a live coal or the like. *ḥuṭṭ il-buxuur fil-magmara* put the incense in the censer.
اتجمر *ʕitgamar* or *ʕiggamar* /vi/ passive of *gamar*. -iva *mitgimir*.
انجمر *ʕingamar* = *ʕitgamar*. -iva *mingimir*.
جمّر *gammar[1]* /vt/ **1** to set on fire. *gammar il-faḥm* burn the coal till it blazes up. **2** to heat (bread). *gammar il-ʒeef* heat the bread over the fire. — /vi/ **3** to blaze. *ʕil-xaʃab il-maḥruuʠ gammar* the burning wood blazed up. -vn *tagmiir*; ava/pva *migammar*.
اتجمّر *ʕitgammar[1]* or *ʕiggammar[1]* /vi/ to be heated (of bread). -iva *mitgammar*.

²ج م ر
جمر *gamr[2]* /coll n/ pebble(s).
جمرة *gamra[2]* /n pl *-aat*/ **1** /unit n/ a pebble. **2** *[Isl]* **2a** /also pl *gamaraat*/ one of the three pillars at Mina at which pilgrims throw pebbles in the course of Meccan pilgrimage rites. **2b** /also pl *gimaar*/ a pebble used in the rite of stoning the pillars at Mina.

اتجمّر ʔitgammar[2] or ʔiggammar[2] /vi/ *[Isl]* to purify oneself from any traces of urine or excrement (where clean water is unavailable) by cleaning oneself with three clean and dry pieces of stone. - vn *tagammur*↑; ava *mitgammar*.
استجمر ʔistagmar = ʔitgammar[2]. - vn ʔistigmaar; ava *mistagmar*.

ج م ر[3]
جمّار gummaar /coll n/ tender green shoot(s) at the top of sugar cane or palm trees.
جمّارة gummaara /pl -aat/ unit noun of *gummaar*.
جمّر gammar[2] **1** /vt/ to pollinate (especially palm trees). **2** /vi/ to produce tender green shoots (from the heart of the plant, of, e.g., palm trees, sugar cane, lettuce). *ʔil-qaṣab gammar* fresh shoots appeared at the top of the sugar cane. - vn *tagmiir*; ava/pva *migammar*.
اتجمّر ʔitgammar[3] or ʔiggammar[3] /vi/ to be pollinated (of a palm trees). - iva *mitgammar*.

ج م ر ك
جمرك gumruk <T *gümrük*> /n pl *gamaarik*/ **1** customs duty. **2** customs-house.
جمركي gumruki /adj */ pertaining to customs. *ʔit-taʕriifa g-gumrukiyya* customs tariff.
جمرك gamrak *(a)* /vt or vi/ to impose customs duty. *gamraku (ʕala) l-ʕarabiyya* they have charged customs duty on the car. - vn *gamraka*; ava/pva *migamrak*.
اتجمرك ʔitgamrak or ʔiggamrak /vi/ passive of *gamrak*. - iva *mitgamrak*.

ج م ز
جميز gimmeez /coll n/ **1** sycamore(s). **2** sycamore fig(s).
جميزة gimmeeza /unit n, pl *-aat, gamamiiz*/ **1** a sycamore. **2** a sycamore fig.
جميزاية gimmeezaaya /unit n, pl *-aat*/ a sycamore fig.
جماميز gamamiiz: *darb il-gamamiiz* a populous district in east Cairo.
جمّز gammiz /vi/ to become pulpy (like sycamore fruit). - ava *migammiz*.

ج م س[1]
جيمس jims <prop n *James [Dean]*> /n pl *-aat/ [obsol]* modish young man. see further under ج م س ن

ج م س[2] see ج م و س: *gamuus, gamuusa, gamuusi*

ج م س ن see also ج م س[1]
جمسنة jamsana /n/ *[obsol]* modish behaviour (of a young man, after the manner of James Dean).
اتجمسن ʔitjamsin or ʔijjamsin /vi/ *[obsol]* to be modish (of a young man, after the manner of James Dean). - ava *mitjamsin*.

ج م ش ت
جمشت gamaʃt <P *gamasт*> /n/ amethyst.

ج م ص
جمص gamṣ /adj invar/ boorish, uncultured.

ج م ع
جمع gamaʕ *(a)* /vt/ **1** to bring together, gather, collect. *gamaʕna lli yxuṣṣ-i-na* we gathered together our own things. *ʔilli yigmaʕ-u rabb-i-na ma-yfarraq-uu-ʃ ʔinsaan* (or *maxluuq*) *[prov]* what God joins together no man can put asunder. *gamaʕu ʔaṭraaf il-muʃkila* they summed up the problem from all sides. *ʔin-naṣiib gamaʕ ʃaml-u-hum marra tanya* fate brought them together once more. ‖*ma gamaʕ ʔilla-mma waffaq [prov]* ≈ birds of a feather flock together. - *ʔiṣ-ṣalaatu gaamiʕa [Isl]* call in the mosque for Muslims to gather together to perform the *ʕiid* prayer or for meeting after prayer. **2** to gather, pick. *gamʕ il-quṭn* cotton picking **3** to add (up). *bi-nigmaʕ il-murattab zaa ʔid il-badalaat* we add up the salary together with the allowances. **4** to berth (a ship). *ʔir-rayyis gamaʕ il-babuur ʕar-raṣiif* the captain berthed the ship at the quay. **5** *[print]* to set, compose. *ḫa-nigmaʕ il-ḫuruuf wi-niʕmil ʕaleeha birovaat* we'll set the type and make proofs from it. **6** *[gram]* to make (a word) plural. — /vi/ **7** to assemble. *lamma n-naas tigmaʕ* when the people gather. *ʔigmaʕ [mil]* assemble! - vn *gamʕ, gamaʕaan*; ava *gaamiʕ*; pva *magmuuʕ*.
جمع gamʕ /n/ **1** *[math]* addition. **2** /pl *gumuuʕ*/ *[gram]* plural.
¶ *gamʕan* or *gamaʕan* reply to the formulae *ḫaraman* (q.v.) and *min zamzam* (q.v.) = (may we be there) together.
جمعة gamʕa[1] /inst n, pl *-aat*/ one picking (of crop). *quṭn[i] ʔawwil gamʕa* cotton from the first picking (a high grade of cotton).
جامع gaamiʕ[1] /n/ **1** /pl *-iin*/ collector. *gaamiʕ ṭawaabiʕ* stamp collector. **2** /pl *gawaamiʕ*/ mosque. **3** /no pl/ All-embracing One (epithet of God). ‖*baraka ya gaamiʕ* see *baraka*.
جامعة gamʕa[2] /n pl *-aat*/ **1** university. **2** league. *gamʕit id-duwal il-ʕarabiyya* or *ʔig-gamʕa l-ʕarabiyya* the League of Arab States, the Arab League.

جامعى *gaamiɛi* /adj/ pertaining to universities. *taɛliim gaamiɛi* university education.

مجموع *magmuuɛ* /n pl *magamiiɛ*/ **1** sum, total amount. *magmuuɛ il-filuus* the sum of the money. **2** final score (in a competition). **3** total of marks (in an examination). *ʕit-tilmiiz gaab magmuuɛ kuwayyis* the pupil got a good result.

مجموعة *magmuuɛa* /n pl *-aat*/ **1** group, assemblage, collection. *magmuuɛit suwwaaḥ* a group of tourists. *magmuuɛit fasatiin* a collection of dresses. *ʕil-magmuuɛa ʃ-ʃamsiyya* the solar system. ‖*ḍarabt-u magmuɛaat* I gave him a succession of punches. **2** /also pl *magamiiɛ*/ group of students given extra-curricular tuition to bring them up to the standard of their better colleagues.

جمعيّة *gamɛiyya* /n pl *-aat*/ **1** association, club. *gamɛiyyit if-ʃubbaan il-muslimiin* Muslim Youth Association. **2** government-sponsored co-operative. *gamɛiyya taɛawniyya* government-owned food store. *gamɛiyya ziraɛiyya* agricultural co-operative. **3** informal savings club.

جمعة *gumɛa* /n/ **1** /pl *gumaɛ*/ week. **2** (also *yoom (ig-) gumɛa*) Friday. *ṣalaat ig-gumɛa* Friday midday communal prayer. ‖*ʕil-gumɛa l-yitiima [Isl]* the last Friday of Ramadan. *ʕil-gumɛa l-ḥaziina* (or *l-ɛaziima*, or *k-kibiira*) *[Chr]* Good Friday.

جماعة *gamaaɛa* /n pl *-aat*/ **1** formal or informal group of people. *gamaaɛit il-muʕminiin [Chr]* congregation of believers. *gamaaɛa min il-mudarrisiin* a group of teachers. *mutʃakkir ɕawi ya gamaaɛa* thanks very much, everyone. ‖*gamaaɛit il-xidma l-ɛamma* the student voluntary service society. - *ʕig-gamaaɛa* indirect form of reference to one's wife, or to one's wife and family. **2** *[mil]* squad.

جماعى *gamaaɛi* /adj */ collective. *ɛilaag gamaaɛi* group therapy.

جميع *gamiiɛ* /n/ **1** *ʕig-gamiiɛ* everybody. *ʕil-gamiiɛ ʕakalu* has everyone eaten? ‖*liɛbit goon lil-gamiiɛ* street ball-game in which all the players aim at the same goal. **2** all, all of. *gamiiɛ il-biyuut* all of the houses. ‖*mimma gamiiɛ-u* something of everything necessary, as in *tilaaɋi ɛanduhum mimma gamiiɛ-u min il-muɛallabaat wi-lawaazim il-beet* you'll find they have all sorts of tinned goods and things for the house.

¶ *gamiiɛan* /adv/ everyone. *ṣabaaḥ il-xeer (ɛaleeku) gamiiɛan* good morning, one and all!

جمّاع *gammaaɛ* /n */ *[print]* typesetter, compositor.

جميع *gammiiɛ* /n */ *[print]* typesetter, compositor.

مجمع *magmaɛ* /n pl *magaamiɛ*/ **1** meeting, assembly. **2** council. *magmaɛ il-luɣa l-ɛarabiyya* or *ʕil-magmaɛ il-luɣawi* the Arabic language Academy. **3** *[Chr]* synod. **4** *[zool]* cloaca. **5** *[rur]* a small wooden (or tin) box (for keeping sugar, coffee etc.).

اتجمع *ʕitgamaɛ* or *ʕiggamaɛ* /vi/ passive of *gamaɛ*. - iva *mitgimiɛ*.

انجمع *ʕingamaɛ* = *ʕitgamaɛ*. - iva *mingimiɛ*.

جمّع *gammaɛ* /vt/ **1** to assemble, put together. *ɛaʃaan yigammaɛ il-ʕagzaaʕ* in order to put the parts together. *ɛaawiz yigammaɛ il-masuura di wil-masuura di* he wants to join this pipe and this pipe. ‖*ʕit-tilifoon ma-bi-ygammaɛ-ʃ in-nimra* the number doesn't connect. - *wiḥda mugammaɛa* (rural) community centre. - *markaz tagmiiɛ* collection or assembly centre. **2** *[print]* to set, compose. *bi-ygammaɛ il-ḥuruuf wi-b-yiɛmil ɛaleeha birovaat* he sets the type and makes proofs from it. - vn *tagmiiɛ*; ava *migammaɛ*; pva *mugammaɛ*.

مجمّع *mugammaɛ* /n pl *-aat*/ **1** depot. *mugammaɛ baḍaayiɛ* goods depot. ‖*mugammaɛ il-ḥadiid wiṣ-ṣulb* the (Helwan) Steel Plant. **2**↑ co-operative store. — /no pl/ **3** *ʕil-mugammaɛ* concentration of government departments in a building on Tahrir Square, Cairo.

اتجمّع *ʕitgammaɛ* or *ʕiggammaɛ* /vi/ passive of *gammaɛ*. - vn *tagammuɛ*↑; ava *mitgammaɛ*.

تجمّع *tagammuɛ* /n pl *tagammuɛaat*/ gathering, assembly. *ʕiktaʃafit ṭayyarat-na tagammuɛaat lil-ɛaduw* our planes discovered enemy concentrations.

جامع *gaamiɛ*[2]↑ /vt/ to have sexual intercourse with. - vn *mugamɛa*, *gimaaɛ*; ava *migaamiɛ*.

جماع *gimaaɛ* /n/ sexual intercourse.

اتجامع *ʕitgaamiɛ* or *ʕiggaamiɛ* /vi/ to have sexual intercourse. - ava *mitgaamiɛ*.

أجمع *ʕagmaɛ* /vi/ to decide unanimously. *ʕagmaɛna* (or *ʕagmaɛna raʕy-i-na) ɛala l-mirwaaḥ maɛaahum* we made a joint decision to go with them. - vn *ʕigmaaɛ*; ava *mugmiɛ*↑; pva *mugmaɛ*↑.

إجماع *ʕigmaaɛ* (also *ʕigmaaɛ ir-raʕy*) /n/ unanimous agreement. *wafɋu bil-ʕigmaaɛ* they agreed unanimously.

إجماعى *ʕigmaaɛi*↑ /adj/ unanimous. *kaanit muwafɋa ʕigmaaɛiyya* it was a unanimous agreement.

اجتمع *ʕigtamaɛ* /vi/ **1** to gather, meet together, assemble. *ʕigtamaɛu fil-ḥarb* they got together during the war. *ʕis-sittaat igtamaɛu wi-ttafaɋu ʕinnuhum yiɋaṭɛu l-maḥallaat* the women got together and agreed to boycott the stores. **2** *[euphem]* to have sexual intercourse. *ʕigtamaɛ maɛa mraat-u* he had intercourse with his wife. - vn *ʕigtimaaɛ*; ava *migtimiɛ*.

اجتماع *ʕigtimaaɛ* /n/ **1** /pl *-aat*/ meeting, assembly.

makaan l-igtimaaɛ meeting place. *ɛamalna gtimaaɛ* we held a meeting. **2** (also *ɛilm il-igtimaaɛ*) /no pl/ sociology.

اجتماعى *ʔigtimaaɛi* /adj */ **1** social. *ʔaxiṣṣaaʔi gtimaaɛi* (1) social worker, social counsellor. (2) student counsellor. ‖ *ʔil-ḥaala l-igtimaɛiyya* marital status. **2** sociable, fond of society. *raagil igtimaaɛi bi-yḥibb il-ḥafalaat* a sociable man who likes parties.

مجتمع *mugtamaɛ* /n pl *-aat*/ society, milieu. *ʔil-mugtamaɛ il-xaarigi* the outside world.

أستجمع *ʔistagmaɛ* /vt/ to concentrate, gather together. *laazim nistagmaɛ kull' ɋiwwit-na ɛafaan niwaagih il-ɛaduw* we must gather all our forces to face the enemy. - vn *ʔistigmaaɛ*; ava *mistagmaɛ*.

ج م ل [1]

جمال *gamaal* /n/ beauty. *ya gamaal in-nabi (ɛaleek)* expression of admiration ≈ aren't you a beauty! *gamaal id-dinya bil-maal wil-ʔaxra bil-ʔaɛmaal [prov]* the beauty of this world is (attained) by wealth, and that of the hereafter by (good) deeds.

جمالى *gamaali*↑ /adj/ aesthetic.

جمالات *gamalaat* /fem pl adj/ beautiful, lovely. *banaat gamalaat* pretty girls.

الجماليّة *ʔil-gamaliyya* /prop n/ quarter and administrative district (*ɋism*) in eastern Cairo.

جميل *gimiil* /n pl *gamaayil*/ favour, service, good turn. *ma-b-yiḥfaẓ-ʃ ig-gimiil* he is ungrateful. *ʔilli yiɛmil gimiil yitimm-u [prov]* he who does a good turn should do it in full.

جميلة *gimiila* = *gimiil*.

جميل *gamiil* /adj pl *gumaal*/ **1** beautiful, aesthetically pleasing. *ʔil-funuun il-gamiila* the fine arts. **2** fine, excellent. *zooɋ gamiil* good taste. ‖ *lu raʔy' gamiil* he has good ideas.

أجمل *ʔagmal*[1] /el/ more/most beautiful, nicer/nicest. *ʔagmal ḥaaga f-ḥayaat-i hiyya l-ɋiraaya* the nicest thing in my life is reading.

جمّل *gammil*[1] /vt/ to beautify. ‖ *rabb-i-na ygammil-ha bis-satr* may God bless our life with His protection! - vn *tagmiil*; ava *migammil*.

تجميل *tagmiil* /n/ beautification, cosmetics. *ɛamaliyyit tagmiil* plastic surgery.

اتجمّل *ʔitgammil* or *ʔiggammil* /vi/ **1a** to be beautified. **1b** to beautify oneself. *ya hana lli yitgammilu biṣ-ṣabr* ≈ blessed be those who adorn themselves with forbearance. **2** to do a favour, offer a service. *ma-yḥibb'-ʃ ḥadd' yitgammil ɛalee* he doesn't like anyone to do him a favour (thereby making him feel under an obligation). - vn *tagammul*; ava/iva *mitgammil*.

جامل *gaamil* /vt/ **1** to treat with courtesy. **2** to flatter. — /vi/ **3** to behave with courtesy. - vn *migamla*; ava *migaamil*.

مجاملة *mugamla* /n pl *-aat*/ **1** courteous expression (of greeting etc.). **2** act of courtesy.

اتجامل *ʔitgaamil* or *ʔiggaamil* /vi/ **1** to boast of doing a favour. *la titgaamil ɛalayya wala ʔatgaamil ɛaleek* let us stop pretending that we try to oblige each other. **2a** to be treated with courtesy. **2b** to be flattered. - ava/iva *mitgaamil*.

استجمل *ʔistagmil* /vt/ **1** to select for beauty. *ʔaḥsan-lu yistagmil bint' yiggawwiz-ha* he should choose a pretty girl to be his wife. **2** to consider beautiful. *mistagmila roḥ-ha* she is vain about her looks. - vn *ʔistigmaal*; ava *mistagmil*.

ج م ل [2]

جمل *gamal'* *(i)* /vt/ to combine, add together. *gamal-hum bi-ʃatma* he blanketed them under one insult. ‖ *ʔil-ḥisaab yigmil* (let the account accumulate) don't bother to pay me back now; I'm keeping a note of what you owe (in situations of frequent financial transaction). - vn *gaml*; ava *gaamil*; pva *magmuul*.

جمل *gumla* /n/ **1a** /pl *gumal*/ total, sum. *gumlit il-baḍaayiɛ miit ḥitta* the total of the goods is one hundred items. *ḥ-adfaɛ big-gumla* I'll pay in a lump sum. ‖ *gumlit naas* a bunch of people. **1b** /no pl/ bulk. *ʔil-ʔintaag big-gumla* mass production. *tigaarit ig-gumla* the wholesale trade. *tuggaar nuṣṣ' gumla* merchants dealing in small quantities of wholesale goods. **2** /pl *gumal*/ phrase, sentence. *gumal musiqiyya* musical phrases.

جملة *gimla: bi-gimlit (dool)* and *min gimlit (dool)* expression dismissive of the importance of a loss sustained, in view of a preceding, and much greater, loss. *xalli g-gineeh da b-gimlit illi ḍaaɛu* count that pound as one of all the rest that were lost.

اتجمل *ʔitgamal* or *ʔiggamal* /vi/ to be combined, be added together. - iva *mitgimil*.

انجمل *ʔingamal* = *ʔitgamal*. - iva *mingimil*.

أجمل *ʔagmal*[2]↑ /vt/ **1** to combine, add together. **2** to sum up. *ʔigmil-li l-mawḍuuɛ fi-talat kilmaat* summarize the subject for me in three words. - vn *ʔigmaal*; ava *mugmil*; pva *mugmal*.

إجمالى *ʔigmaali* **1** /adj/ total, overall. *ʔil-maɛna l-ʔigmaali* the overall meaning. **2** /n/ total (sum). *ʔigmaali taman il-beeɛ* the total sales price.

مجمل *mugmal*↑ /n pl *-aat*/ summary, outline.

ج م ل [3]
جمل *gamal*[2] /n pl *gimaal, gimíla*/ camel. ‖*ɛeen gamal* walnut. -*ma-ʃuft*[i]*-ʃ il-gamal wala l-gammaal [prov]* (I have seen neither the camel nor the cameleer) I have no idea who was responsible. -*ʃil-gamal bima ɦamal* (the camel with what it carried) the whole caboodle. -*ma-gaa-ʃ fi-gamal* ≈ he hasn't asked for too much! -*ʃis-sikka tfawwit ig-gamal* (the way permits the passage of the camel) no-one is forcing (you etc.) to stay! -*ya gamal-i* expression of mourning by a woman lamenting her dead husband. -*gamal il-baɦr* pelican.
جملي *gamali* /adj invar/ **1** of or pertaining to camels. *laɦma gamali* camel meat. **2** requiring long cooking. ‖*ʃaay gamali [joc]* tea very late in coming.
جمّال *gammaal* /n pl *-iin, gammaala*/ camel driver.
جمّل *gammil*[2] /vi/ to work as a camel-driver. -vn *tagmiil*; ava *migammil*.

ج م ل ك
جملكّة *gumalakka, gamalakka* <It *gommalacca*> /n/ lac, shellac.

ج م ل و ن
جمالون *gamaloon* <prob It *comignolo*> /n pl *-aat*/ pitched roof.

ج م م
استجم *ʃistagamm*↑ /vi/ to relax, take things easy. -vn *ʃistigmaam*; ava *mistigimm, mustagimm*.

ج م م ى ز see ج م ز : *gimmeez*

ج م ه ر
جمهرة *gamhara* = *gumhuur*.
جمهور *gumhuur, gamhuur*↓ /n/ **1** /pl *gamahiir*/ crowd, mass or multitude of people. *gumhuur in-naaxibiin* the mass of electors. *gamahiir if-faɛb* the popular masses. **2** /no pl/ public. *di liiha gumhuur* there is a public for this. *gumhuur ik-koora* the football public. *ʃil-muwaẓẓaf rakan ig-gumhuur* the employee kept the public waiting.
جماهيرى *gamahiiri* /adj/ pertaining to the public, popular.
جمهورى *gumhuuri* /adj */ republican. ‖*ʃil-ɦaras ig-gumhuuri* the Presidential Guard. -*qaraar gumhuuri* Presidential decree.
جمهوريّة *gumhuriyya* /n pl *-aat*/ republic. *gumhuriyyit maṣr il-ɛarabiyya* the Arab Republic of Egypt.
اتجمهر *ʃitgamhar* or *ʃiggamhar* /vi/ to gather in crowds. *ʃin-naas itgamharit fil-midaan* crowds gathered in the square. -ava *mitgamhar*.

ج م و س
جاموس *gamuus* <P *gâmûs*> /coll n/ water buffalo(es). ‖*gamuus ʃabyaq* stupid oaf.
جاموسة *gamuusa* **1** /n pl *gawamiis, gamusaat*/ female water buffalo. **2** /masc and fem adj/ oafish. *ʃamma raagil gamuusa ṣaɦiiɦ* what a great lout of a man!
جاموسى *gamuusi* /adj/ pertaining to water buffalo. *laɦma gamuusi* (1) buffalo meat. (2) very tough meat.

ج ن ء see [1] ج ن ى : *ginaaʃi*

ج ن ب
جنب *ganab (i)* **1** /vt/ to set aside. *ʃignib it-ṭarabeeza fir-rukn* move the table aside into the corner. **2** /vi/ to move aside. *qult-i-lu yignib ʃiwayya* I told him to move aside a little. -vn *ganabaan*; ava *gaanib*; pva *magnuub*.
جانب *gaanib*↑ /n pl *gawaanib*/ **1** aspect. *min il-gaanib il-qanuuni* from the legal aspect. ‖*layyin il-gaanib* gentle. -*ɛaziiz il-gaanib* powerful. -*marhuub il-gaanib* feared. -*fasiiɦ il-gawaanib* wide, spacious (of buildings, towns etc.). **2** side. ‖*ʃila gaanib* besides, in addition to. -*ɛala gaanib* to a degree, as in *ɛala gaanib kibiir mil-ʃahammiyya* of great importance. — /prep/ **3** next to, beside. *gaanib il-baab* next to the door.
جنب *gamb*[2] **1** /n pl *ginaab, ʃagnaab, gunuub*/ side. *gamb it-ṭariiq* the side of the road. *siib-u ɛala gamb* leave it aside. *ginaab-i wagɛaa-ni* my sides ache. *ma-timʃii-ʃ min gamb-a-ɦa* don't leave her side. ‖*ʃiriiṭ gamb [text]* selvage. -*ẓamb-u ɛala gamb-u [prov]* he'll get (or, has got) his just deserts. -*kull*[i] *waaɦid yinaam ɛag-gamb illi yrayyaɦ-u* (since agreement is impossible) let everyone go his own way. -*xad gamb*[i] *min* to boycott, keep aloof from, as in *leeh waaxid gamb*[i] *minni* why are you avoiding me? **2** (also *gamb*[i] *min*) /prep, ẉ pron suff often *gambii-*/ **2a** next to, beside. *gamb if-ʃibbaak* next to the window. *faatit gambiina* she passed by us. **2b** along with, together with. *haati ʃwayyit ṭurʃi gamb il-ʃakl* bring some pickles with the food.
¶ *gamban: gamban silaaɦ [mil]* lower arms!
جنبة *gamba* /n pl *-aat, ginab*/ pannier (especially one of a pair carried by a donkey). *ʃana lli wqiɛt*[i] *min qaɛr ig-gamba* (it is I that fell from the bottom of the pannier) I am hopelessly unlucky.
جنبيّة *gambiyya* /n/ sheath-knife (in the jargon of *fitiwwaat*).
جنب *gunub* /adj invar/ *[Isl]* ritually impure after sexual intercourse (of the human body).

جنّبيّة *gannabiyya* /n pl *gananiib*/ **1** plot of land on either side of a secondary canal. **2** ditch alongside a road or railway track.

أجنبى ʕagnabi /pl ʕagaanib/ **1** /adj/ foreign. **2** /n/ foreigner.

جناب *ganaab* /n/ *[obsol]* honorific used as a respectful form of reference and address. *ganaab-ak* Sir. ‖ *xallii-ha ɛala ganaab illaah* leave it up to God. - *ʕil-ganaab il-ɛaali [obsol]* title of, and form of reference to, the Sultan of Turkey.

جنابة *ganaaba* /n/ *[Isl]* state of ritual impurity after sexual intercourse.

جنوب *ganuub* /n/ south.

جنوبى *ganuubi* /adj/ southern.

جنيبى *ginneebi* /adv/ **1** sideways. *raakib ginneebi* riding sidesaddle. **2** side by side.

اتجنب ʕitganab or ʕigganab /vi/ **1** to be set or moved aside. **2** to move away, remove oneself. - ava/iva *mitginib*.

انجنب ʕinganab = ʕitganab. - ava/iva *minginib*.

جنّب *gannib* /vt/ **1** to turn sideways. *gannib il-maktab ɛal-ħeeṭa* turn the desk sideways on to the wall. **2** *[leg]* to demarcate (boundaries). - vn *tagniib*; ava/pva *migannib*.

تجنيبة *tagniiba* /pl *-aat, taganiib*/ instance noun of *tagniib*.

اتجنّب ʕitgannib or ʕiggannib **1** /vt/ to avoid. *ʕitgannibna l-munaqʃa* we avoided the argument. **2** /vi/ *[leg]* **2a** to fix a demarcation line. **2b** to be demarcated. - vn *tagannub*; ava/iva *mitgannib*.

أجنب ʕagnab /vi/ *[Isl]* to become ritually impure as a result of having sexual intercourse. - ava *mugnib*.

اجتنب ʕigtanab /vt/ to keep away from, avoid, boycott. - vn ʕigtinaab; ava *migtinib*.

ج ن ب ز see ج م ب أ ز: *gumbaaz*

ج ن ت ل

جنتل *jintil* <Engl *gentle(man)*> /adj invar/ **1** well-bred, refined. *walad jintil wi-muʕaddab ɋawi* a well-bred and very polite boy. **2** gentle. *xallii-k jintil maɛaaha* treat her gently.

جنتلة *jantala* /n/ **1** good-breeding. **2** gentleness.

ج ن ج

جانجا *ganga* <Fr *changeant*> /adj invar/ shot (of a fabric).

ج ن ج ل see ج ل ج ل: *gingil*

[1] ج ن ح

جنح *ganaħ (i)* **1** /vt/ to strand, run (a ship) aground. *ʕil-marakbi ganaħ il-ɋaarib ɛar-raml[i] w-saħab-u lil-barr* the boatman ran the boat aground on the sand and pulled it ashore. **2** /vi/ to run aground. - vn *ganħ, ganaħaan*; ava *gaaniħ*; pva *magnuuħ*.

جناح *ginaaħ, ganaaħ* /n pl *ʕigniħa, ʕagniħa, ginaħaat*/ **1** wing (of a bird, an aeroplane). ‖ *maksuur ig-ginaaħ* weak, in need of protection. - *ʕilli txaaf ɛala ragil-ha wi-txiir tiqaṣqaṣ ginaaħ-u la yṭiir [prov]* she who worries about her husband and gets jealous should clip his wings so that he does not fly away. - *ɛala gnaaħ is-surɛa* (also *ɛala ganaah ir-riiħ*) very quickly. - *ɛala gnaaħ il-ʕasiir* by radio. - *ʕixfiq ginaaħ-ak* be modest and humble. - *dayman faarid ginaaħ-u* he is always overbearing. **2** wing (of a building). **3** suite. *ħagazna-lhum ginaaħ fil-lukanda* we reserved a suite in the hotel for them. **4** *[soccer]* wing. *ʕig-ganaaħ il-ʕayman* the right wing.

جنيّح *gunayyiħ* /n pl *-aat*/ aileron.

جنّح *gannaħ* **1** /vt/ to swing or stretch (the arms) expansively. *gannaħ diraɛaat-u* he stretched out his arms. — /vi/ **2** to swing the arms expansively, take up a lot of room (particularly when walking). **3** to tilt, stand at an angle (of a vehicle with a bent axle or wrecked suspension). - vn *tagniiħ*; ava/pva *migannaħ*.

مجنّح *mugannaħ↑, migannaħ* /adj/ winged.

[2] ج ن ح

جنحة *gunħa* /n pl *gunaħ*/ misdemeanour, civil offence.

ج ن د

جند *gund* /coll n, pl *ʕagnaad*/ body of troops. *gund[i] murtazaqa* mercenaries. ‖ *gundu llaah [Isl]* the faithful. - *gund iʃ-ʃayṭaan* the followers of Satan. - *ʕagnaad ir-rabb [Chr]* the hosts of the Lord. - *rabb il-ʕagnaad [Chr]* the Lord of hosts.

جندى *gundi* /n pl *gunuud*/ **1** *[mil]* ordinary soldier (in contrast with an officer). **2**↑ soldier, fighting-man (of any rank). *ʕil-gundi l-maghuul* the Unknown Soldier.

جنديّة *gundiyya* /n/ military service.

جند *gindi* /n pl *ganaadi*/ *[obsol]* Turkish soldier, mameluke. *ħadd[i] yquul lig-gindi xaṭṭi ṭiiz-ak [prov]* (who would dare to tell the mameluke 'Cover your arse'?) ≈ who dares tell a powerful man how to behave?

جنّد *gannid* /vt/ **1** *[mil]* to recruit, conscript. **2** to employ, call upon the services of (s.o.), enlist the help of (s.o.). *gannidt[i] nafs-i l-xidmit-hum* ≈ I devoted myself to serving them. - vn *tagniid*; ava *migannid*; pva *mugannad*.

مجنّد *mugannad* /n */ recruit, conscript.

اتجنّد *ʔitgannid* or *ʔiggannid* /vi/ **1** to be recruited, be conscripted. **2** to have one's services enlisted. - iva *mitgannid*.

ج ن د ر
جندر *gandar* <prob Fr *calandre*> /vt/ to mangle (laundry), calender (paper). - vn *gandara*; ava/pva *migandar*.
اتجندر *ʔitgandar* or *ʔiggandar* /vi/ to be mangled (of laundry), be calendered (of paper). - iva *mitgandar*.

ج ن د ف –
جندوفلى *gandufli* /coll n/ clam(s).

ج ن د ل
جندل *gandal* **1** /n pl *ganaadil*/ boulder, especially obstructing the course of a river. **2** *ganaadil* /pl n/ rapids, cataract.
جندل *gandil*↑ /vt/ to cause to fall down dead (like a stone). *ḍarab-u bin-naar gandil-u* he gunned him down. - vn *gandala*; ava/pva *migandil*.
اتجندل *ʔitgandil* or *ʔiggandil* /vi/ to fall down dead, be made to fall down dead. - vn *tigandiil*; ava/iva *mitgandil*.

ج ن ر see ج ن ن ا ر: *ginnaari, gunnaari*

ج ن ز [1]
جنازة *ganaaza* /n pl -*aat*/ funeral, funeral procession. *ṣalaat il-ganaaza [Isl]* ritual prayer said over the coffin. ‖*ganaaza ḥarra wil-mayyit kalb [prov]* ≈ a lot of fuss about nothing. - *yiqtil il-qatiil wi-yimfi f-ganazt-u* (he walks in the funeral procession of the man he murdered) he is utterly brazen. - *ʔin ʃa-lla ʔamfi f-ganazt-u* ≈ I'd like to see him dead and buried!
جنايزى *ganayzi* /adj/ pertaining to funerals. *ṣala ganayziyya [Chr]* funeral service.
جنّاز *ginnaaz* /n pl *gananiiz*/ *[Chr]* **1** funeral. **2** funeral service. *bi-yiqru l-ginnaaz ɛal-mutanayyiḥiin* they read the funeral service over the dead.
جنّز *ganniz* /vt/ *[Chr]* to perform a funeral service for. *ṣalaat it-tagniiz* funeral service. - vn *tagniiz*; ava *miganniz*.
اتجنّز *ʔitganniz* or *ʔigganniz* /vi/ *[Chr]* to be given a funeral. ‖*ya ʃeex ruuḥ ʔigganniz* drop down dead, you! - iva *mitganniz*.

ج ن ز [2]
جنز *jinz* <Engl> /n pl -*aat*/ jeans. *banṭalunaat jinz* a pair of jeans. *qumaaf jinz* denim. - also *jins*.

ج ن ز ب –
جنزبيل *ganzabiil* /n pl/ ginger. - also *zangabiil*↑.

ج ن ز ر [1]
جنزار *ginzaar* <P *zangâr*> /n/ verdigris.
جنزارة *ginzaara* = *ginzaar*.
جنزارى *ginzaari* /adj invar/ bluish-green, turquoise (in colour).
جنزر *ganzar*[1] /vi/ to become verdigrised. ‖*muxx-u mganzar* ≈ he's thick-headed. - *ya mganzara [abus]* you filthy hag! - vn *ganzara*; ava *miganzar*.

ج ن ز ر [2]
جنزير *ganziir* <P *zanjîr*> /n pl *ganaziir*/ **1** heavy metal chain. *ganziir muxṭaaf* anchor chain. *ganziir ɛagala* bicycle chain. **2** track (on, e.g., a bulldozer, tank).
جنزر *ganzar*[2] /vt/ to chain. *ganzar il-bawwaaba* he fastened the gate with a chain. - vn *ganzara*; ava/iva *miganzar*.
مجنزر *miganzar* /adj/ tracked, possessing a track. *ɛarabiyya mganzara* tracked vehicle.
اتجنزر *ʔitganzar* or *ʔigganzar* /vi/ to be fastened with a chain, be chained together. - vn *tiganziir*; iva *mitganzar*.

ج ن س [1]
جنس *gins* /n pl *ʔagnaas*/ **1a** type, kind, species. *ʔig-gins il-bafari* the human race. *ʔil-wiṭwaaṭ miʃ min gins iṭ-ṭeer* a bat is not a bird. *ʔin-naas ʔagnaas* ≈ it takes all kinds to make a world. *gins[i] bazramiiṭ* mixed breed. ‖*ya gins[i] kalb* you dog! **1b** /always w neg/ (not a) single. *ma-fii-ʃ gins[i] waaḥid* there's not a single person there. *wala gins[i] kilma* not a single word. **2** race, nation. *bi-yikrah ʔahl[i] gins-u* he hates his compatriots. **3** *[mus]* tetrachord. – /no pl/ **4a** sex. *ʔig-gins il-laṭiif* the fair sex. **4b** sexual activity.
جنسى *ginsi* /adj/ pertaining to sex. *ʔif-fuzuuz ig-ginsi* sexual perversion. *kutub ginsiyya* sex books.
¶ *ginsiyyan*↑ /adv/ sexually.
جنسيّة *ginsiyya* /n pl -*aat*/ nationality. *ʔidaarit ig-gawazaat wig-ginsiyya* passport and immigration office.
جنّس *gannis* /vt/ **1** to sort or classify according to type. **2** to harmonize, blend. *gannisit il-fustaan maɛa l-kulfa* she made the dress and the trimmings harmonious. - vn *tagniis*; ava/pva *migannis*.
مجنّس *migannis* /adj */ cross-bred, of mixed descent, mongrel. ‖*qumaaf migannis [text]* blended cloth, cloth of two sorts one markedly inferior to the other.
اتجنّس *ʔitgannis* or *ʔiggannis* /vi/ **1** to be sorted, be classified. ‖ *ʔitgannis bi-ginsiyya* to acquire citizenship, as in

ʕitgannist^{i} big-ginsiyya l-ʕamrikiyya I acquired American citizenship. **2** to be harmonized, be blended. - ava/iva *mitgannis*.

جانس *gaanis* /vt/ **1** to resemble, be of the same kind or nature as. *ʕil-ḫumaar il-mixaṭṭaṭ bi-ygaanis il-ḫumaar il-ɛaadi* the zebra is akin to the donkey. **2** to match up. - vn *migansa*; ava *migaanis*.

اتجانس *ʕitgaanis* or *ʕiggaanis* /vi/ **1** to become similar. **2** to be matched up. - vn *tagaanus*; ava/iva *mitgaanis, mutagaanis*↑.

تجانس *tagaanus*↑ /n/ similarity, harmony.

ج ن س [2]

جينس *jins* <Engl> /n pl *-aat*/ jeans. *ɋumaaʃ jins* denim. - also *jinz*.

ج ن ش

جنش *ganʃ* <It *gancio*> /n pl *-aat*/ hook-shaped end of a metal rod.

جنشة *ganʃa* = *ganʃ*.

جنّش *gannif* /vt/ to bend the end of a metal rod into a crook or U-shape. - vn *tagniif*; ava *migannif*.

اتجنّش *ʕitgannif* or *ʕiggannif* /vi/ to be bent into a crook or U-shape. - iva *mitgannif*.

ج ن ص

جنص *ganṣ* <Fr *ganse*> /n/ piping, braid.

ج ن ط

جنط *janṭ* <Fr *jante*> /n pl *junúṭa*/ wheel-rim, felloe. ‖*ɛala j-janṭ* penniless.

ج ن ك ل) –

جونكلير *junkileer* <Fr *jongleur*> /n pl *-aat*/ juggler.

جانكليس *ganakliis* or *janakliis* <prop n *Gianaclis*> /n/ **1** variety of grape, reddish-yellow and large-sized (used for wine). **2** brand name of wine.

ج ن ل ل

جونلّة *gunilla* <It *gonnella*> /n pl *-aat*/ skirt.

ج ن ن [1]

جنّ *gann (i)* /vt/ to drive mad. *di ḫaaga tginn* this (is so infuriating, or, so marvellous, that it) drives one crazy! *da raagil yiginn illi ma-yitgann^{i}-ʃ* that man would drive the sanest person mad! *nawya ɛala gnaan-i* she's trying to drive me mad! - vn *ginaan*; ava *gaanin*; pva *magnuun*.

جنان *ginaan* /n/ **1** madness, insanity. **2** /used in apposition/ something wonderful or fantastic. *di bint^{i} gnaan* she's a marvellous girl! – /interj/ **3** crazy! fantastic! super!

مجنون *magnuun* /pl *maganiin*/ **1** /adj/ **1a** crazed, crazy. *ma-tibqaa-ʃ magnuun* don't be crazy! ‖*ya ṭamaaṭim ya magnuuna [vendor's cry]* crazy tomatoes (referring to the wild movement in price). **1b** infatuated with. *magnuun koora* football crazy. *magnuuna bir-raqṣ* she's crazy about dancing. **2** /n/ madman, lunatic.

جنّة *ganna^{1}* /n/ a fit or attack of madness. *min ʕawwil naẓra gat-lu ganna sm-a-ha muna* at first sight he went wild with love (or: hatred) for Mona.

أجنّ *ʕagann* /el/ more/most insane, infatuated or infatuating. *ʕif-furba tgannin wil-ʕakl^{i} ʕagann* the soup is great and the food even better!

جنون *gunuun* /n/ madness, insanity. ‖*ʕil-gunuun funuun [prov]* ≈ madness takes many forms (said upon witnessing or hearing of something strange or eccentric).

جنوني *gunuuni* /adj/ crazy, insane. *taṣarrufaat gununiyya* crazy behaviour. *b-aḥibb-a-ha b-ʃakl^{i} gunuuni* I love her to distraction.

جنونيّة *gununiyya* /n/ craziness, foolish behaviour. *balaaʃ gununiyya* don't be silly! *ɛandu ʃwayyit gununiyya* he's a little crazy.

جنّونة *gannuuna* /n/ **1** quick temper. *ʕir-raagil da b-gannuuna* this man is hot-tempered. *ʈilɛit gannunit-ha* she went into one of her fits of temper. **2** uncontrolled desire. *gannunt-u l-ɋumaar* he is addicted to gambling.

اتجنّ *ʕitgann* or *ʕiggann* /vi/ to become mad, be driven mad. - ava/iva *mitgann*.

جنّن *gannin* /vt/ **1** to drive insane, madden. *ḫubb-u ḫa-ygannin-ni* his love will drive me out of my mind! **2** to infatuate. – /vi/ **3** to cause madness. **4** to inspire delight. *ʕil-ɋumaaʃ da yigannin* this cloth is gorgeous! - ava *migannin*.

اتجنّن *ʕitgannin* or *ʕiggannin* /vi/ **1a** to go mad or become insane. **1b** to get into a state, become excessively upset. *lamma-nta tʕaxxart itgannint^{i} w-ruḫt il-ɋism* when you were late I got into a state and went to the police station. **2** to become infatuated. *ʕitganninu ɛal-ɛarabiyya* they went crazy over the car. - ava/iva *mitgannin*.

استجنّ *ʕistigann* /vt/ to consider mad. *ʕinta b-tistigann-i-ni* do you take me for a lunatic? - vn *ʕistignaan*; ava *mistiginn*.

ج ن ن [2]

جنّ *ginn* /coll n/ jinn, demons. *bi-yiftaxal zayy ig-ginn* he works like a demon. ‖*ginn^{i} mṣawwar* ≈ the devil personified (applied to a mischievous or clever person). - *wala l-ginn il-ʕazraq yiɛraf ʈariiq-u* ≈ not a soul knows

where he has gone. - *ginn-u w-ɛafriit-u lli yṣaḥḥii badri* ≈ he will be furious with anybody who dares to wake him early.

جنّي *ginni* /unit n */ a male jinni or demon.

جنّيّة *ginniyya* /unit n pl *-aat*/ a female jinni or demon. ‖ *ʕibn[i] ginniyya* a clever devil.

جان *gaan* /coll n/ demons, jinn.

ج ن ن [3]

جنّة *ganna[2]* /n/ **1** *ʕig-ganna* Paradise. *ɛaʃam ʕibliis fig-ganna* (Satan's hope of Paradise) a total impossibility. ‖ *ɛaṣfuur ig-ganna* /coll n/ (1) swallow(s). (2) bird-of-Paradise flower(s). **2** /pl *-aat*/ **2a** paradise. *ganna min ɣeer naas ma tindaas [prov]* a paradise without people is not worth walking in. **2b** any of the (seven) degrees of Paradise.

جنينة *gineena* /n pl *ganaayin*/ **1** garden. **2** park. *gineenit il-ḥayawanaat* the zoo. **3** orchard.

جناينى *ganayni* **1** /n pl *-yya*/ gardener. ‖ *yibiiɛ il-ward[i] lig-ganayniyya [prov]* (he tries to sell flowers to the gardeners) ≈ he takes coals to Newcastle. **2** /adj */ garden. *ɛinab ganayni* garden grapes.

ج ن ن [4]

جنين *ganiin* ʔn pl *ʕaginna*/ **1** foetus, embryo. **2** germ (of a seed).

ج ن ن ا ر

جنارى *ginnaari* or *gunnaari* /adj/ flame-red.

ج ن ى [1]

جنى *gana[1] (i)* /vi/ **1** to commit a crime, sin. *ganit* (or *ganat) fi-ḥaqq-i gnaaya wiḥʃa xaaliṣ* she committed a most terrible crime against me. *ʕil-magni ɛalee* the victim of a crime. **2** to bring suffering (upon s.o., usually unintentionally). *ganeet ɛala-bn-i* I wronged my son. - vn *ginaaya*; ava *gaani*; pva *magni*.

جناية *ginaaya* /n pl *-aat*/ felony, crime, criminal act. *maḥkamit il-ginayaat* criminal court. ‖ *ḥ-awaddii fig-naaya* ≈ I'll get the law onto him!

جانى *gaani* /n pl *gunaahˀ*/ *[leg]* criminal.

جنائى *ginaaʕiˀ* /adj */ criminal. *ʕil-qaḍaaʕ noɛeen - madani wi-gnaaʕi* there are two kinds of jurisprudence, civil and criminal.

اتجنى *ʕitgana[1]* or *ʕiggana[1]* /vi/ (impersonal) passive of *gana*. *kaanit bariiʕa wi-tgana ɛaleeha* she was innocent but suffered unjustly. - iva *mitgini*.

اتجنّى *ʕitganna* or *ʕigganna* /vi/ to behave injustly, bring a false accusation. *ʕitgannu ɛalayya* they wronged me. - vn *taganni*; ava *mitganni*.

ج ن ى [2]

جنى *gana[2] (i)* /vt/ to gather, pick, harvest (especially cotton). ‖ *ʕilli zaraɛ gana [prov]* he who sows will reap. - vn *gany*; ava *gaani*; pva *magni*.

جنّا *ganna[3]* /n pl *-yiin, gannaaya*/ picker, harvester. *gannaayit il-quṭn* a woman cotton-picker.

اتجنى *ʕitgana[2]* or *ʕiggana[2]* /vi/ to be gathered, picked or harvested. - iva *mitgini*.

ج ن ى ه

جنيه *gineeh* <Engl *guinea*> /n pl *-aat*/ **1** one pound (currency). *nuṣṣ[i] gneeh* fifty piastres. *rubɛ[i] gneeh* twenty-five piastres. **2** (golden) guinea. *gineeh ʕingiliizi* a British gold sovereign. ‖ *sumɛit-u zayy ig-gineeh id-dahab* his reputation is spotless. - *kilmit-u zayy ig-gineeh id-dahab* he keeps his promise, he tells the truth. - *muxx-u zayy ig-gineeh id-dahab* he has a brilliant mind.

ج ه [1] see و ج ه : *giha*

ج ه [2] see ج ى : *gih*

ج ه ا ر

جهار *gihaar, guhaar* <P *chahâr*> /n pl *-aat*/ four (in dice etc.).

جهاركاه *girka* see ج ر ك

ج ه ج ه –

جهجهون *gahgahoon* /adv/ haphazardly, in any old way. *waaxid kull[a] ḥaaga gahgahoon* taking everything as it comes. - /adjectivally/ *raagil gahgahoon* a simple fellow.

ج ه د

جهد *gahad (i)* /vt/ to fatigue, exhaust, overwork. *gahad nafs-u min kutr if-fuxl* he overworked himself. - ava *gaahid*.

جهد *guhd* /n/ **1** effort, endeavour. *ḥa-nistafiid min iṣ-ṣabr[i] wil-ɛaraq wig-guhd* we will profit from patience, sweat and effort. *bazalt[i] kull[i] guhd-i fil-mirwaaḥ badri* I made every effort to go home early. **2** *[elec]* potential, voltage. **3** *[phys]* stress.

جهد *gihd* /n/ capacity, competence. *ɛamal ʕaaxir ma f-gihd-u* he did as much as he could. ‖ *kull[i] waaḥid ɛala ɛadd[i] gihd-u* everyone according to his means.

جهود *guhuudˀ* /pl n/ exertions. *guhuud id-dawla f-magaal il-xadamaat* the efforts of the state in the sphere of public utilities.

جهيد *gahiid: guhd[i] gahiid* tremendous effort, great dif-

ficulty. *wi-b-guhd[i] gahiid ʔidirna nʃuʔʔ[i] ṭariʔ-na f-ʔalb iz-zaḥma* with a great deal of trouble we managed to elbow our way through the crowd.

مجهود *maghuud* /n pl *-aat*/ effort, exertion. *ʕil-maghuud il-ḥarbi* the war effort. *maghuud zihni* mental effort.

جاهد *gaahid* /vt/ **1** to struggle against, seek to suppress. ‖ *laazim tigaahid nafs-ak* you must try to suppress your desires. **2** to wage war or jihad (against). *ḍariibit gihaad* war tax. — /vi/ **3** to strive, do one's utmost. *bi-ygaahid fi-sabiil maṣr* he is entirely devoted to serving Egypt. *ʕil-kiniisa l-migahda* the Church militant. - vn *migahda, gihaad*; ava *migaahid*.

جهاد *gihaad* /n/ war. *ʕil-gihaad fi-llaah* the Sufi concept of a conflict between spiritual and material desires.

جهادى *gihaadi* /adj */ military.

جهاديّة *gihadiyya* /n/ *[obsol]* military service. *ʕil-gihadiyya* former style of the Ministry of War.

أجهد *ʕaghad↑* /vt/ to wear out, exhaust. *ʕis-sabbaaḥ baʔa mughad* the swimmer became exhausted. *maḥṣuul mughid lil-ʕarḍ* a crop which overworks the soil. - vn *ʕighaad*; ava *mughid*; pva *mughad*.

اجتهد *ʕigtahad* /vi/ to strive, make an effort, do one's best. *ṭaalib mugtahid* a diligent student. - vn *ʕigtihaad*; ava *mugtahid, migtihid*.

اجتهاد *ʕigtihaad* /n/ **1** effort, diligence. **2** judgement, interpretation, (personal) assessment. *ʕil-masʕala b-tiʕtimid fin-nihaaya ʕala gtihaad-ak if-faxṣi* the matter depends in the final analysis on how you personally see things.

اجتهادى *ʕigtihaadi* /adj/ based on personal judgement. *ʕahu wis-salaam - ḥall igtihaadi* it is just a personal solution.

ج ه ر [1]

جهر *gahar[1]↑ (a)* /vi/ to make a proclamation (in a loud voice), talk openly and brazenly. *gahar bi-raʕy-u* he declared his opinion openly. *gahar bil-maʕṣiya* he flaunted his sin. ‖ *gahar biṣ-ṣala [Isl]* to recite the first two *rakʕa* of the ritual prayer in a loud voice. - vn *gahr, gahaara*; ava *gaahir*; pva *maghuur*.

جهرا *gahran* /adv/ openly, publicly.

جهارا *gahaaran, gihaaran↑* /adv/ openly, publicly. *faḍaḥ-hum gahaaran* he made a public scandal of them. ‖ *gahaaran nahaaran* in broad daylight, as in *saraqu f-faqqa gahaaran nahaaran* they burgled the flat in broad daylight.

جهورى *gahwari, gahuuri* /adj/ loud (of voice). *dayman yitkallim bi-ṣoot gahuuri* he always speaks in a loud voice.

جهير *gahiir↑* /adj/ loud (of sound). *nadra lamma tismaʕ iṣ-ṣoot il-gahiir fil-mazziika ṣ-ṣiini* you rarely hear a loud sound in Chinese music.

مجهر *mighar↑* /n pl *magaahir*/ microscope.

جاهر *gaahar↑* or *gaahir* /vt/ to make an open declaration to (s.o.), address (s.o.) frankly. *bi-ygahir-ni b-ʕadawt-u* he openly expresses his hostility to me. *dayman tigaahir bi-raʕy-a-ha fin-naas* she always lets you know exactly what she thinks of people! - vn *mugahra, migahra*; ava *mugaahir, migaahir*.

ج ه ر [2]

جهر *gahar[2] (a)* /vi/ to become dazzled. *naẓar-u gahar* his eyes were dazzled. - vn *gahar, gaharaan*; ava *gaahir*.

جهر *gahar[3] (i)* /vt/ to dazzle. *ʕil-baṣaṣaan lif-fams[i] yighir in-naẓar* looking at the sun dazzles the eyes. - vn *gahar, gaharaan*; ava *gaahir*.

أجهر *ʕaghar* /adj, fem *gahra*, pl *guhr*/ albino.

ج ه ر [3] see ج ه ا ر : *gihaar, guhaar*

ج ه ز

جهز *gihiz (a)* /vi/ to become ready. *il-fustaan ḥa-yighaz ʕimta* when will the dress be ready? - vn *gahaẓaan*; ava *gaahiz*.

جاهز *gaahiz* **1** /adj */ ready-made. *huduum gahza* ready-to-wear clothes. *xarasaana gahza* precast-concrete. **2** /adv/ already. *milawwin gaahiz* ready-coloured. *ʕana laabis gaahiz wi-mistanni* I'm already dressed and waiting.

جهاز *gihaaz* /n pl *ʕaghiza*/ **1** piece of equipment, appliance, apparatus. *gihaaz tilivizyoon* a television set. *gihaaz ḍaxṭ* pressure gauge. ‖ *ʕaghiza taʕwiḍiyya* artificial limbs. **2** system. *ʕil-gihaaz il-ʕaḍali* the muscular system. **3** (official) body, organizational apparatus. *ʕil-ʕaghiza l-ḥukumiyya l-muxtaṣṣa* the governmental bodies concerned. **4** *[euphem]* private parts. — /pl *-aat*/ **5** trousseau (including household furniture).

جهّز *gahhiz* /vt/ **1** to prepare. *gahhizt il-ʕakl* I prepared the food. *libsu maraayil wi-gahhizu funaṭ-hum* they put on smocks and got their satchels ready. **2** to furnish (a home for newly-weds), prepare a trousseau. **3** *[text]* to dress, finish (cloth). - vn *taghiiz*; ava/pva *migahhiz*.

تجهيزات *taghizaat* /pl n/ preparations. *ʕit-taghizaat iḍ-ḍaruriyya lir-riḥla* the preparations necessary for the trip.

اتجهّز *ʕitgahhiz* or *ʕiggahhiz* /vi/ **1** to get ready, prepare oneself. **2** passive of *gahhiz*. - ava/iva *mitgahhiz*.

أجهز *ʕaghaz↑* /vi/ to put an end (to s.th.), do away (with s.o. or s.th.). *ʕiḍṭarreena nighiz ʕal-ḥayawaan*

il-magruuḥ we were forced to put down the wounded animal. *min fagɛit-u ʕaghaz ɛal-ʃakla l-waḥd-u* he was so gluttonous that he finished off the meal on his own. -vn *ʃighaaz↑*; ava *mughiz↑*.

ج ه ض

أجهض *ʃaghaḍ* **1** /vt/ to abort (a pregnant woman). *ʃaghaḍit nafs-a-ha* she caused herself to abort. -/the literary passive form occurs/ *ʃughiḍat fif-fahr il-ʃawwal* she had an abortion in the first month (of pregnancy). **2** /vi/ to miscarry, abort. -vn *ʃighaaḍ*.

إجهاض *ʃighaaḍ* /n/ abortion.

ج ه ل

جهل *gahal (a)* /vt/ **1** to be ignorant of. ‖ *ʃilli ma-yiɛraf-ak yighal-ak [prov]* ≈ to know you is to appreciate you. **2** to behave according to the dictates of youth. *gahal wi-taab* ≈ he has sown his wild oats. -vn *gahl, gihl↓*; ava *gaahil*; pva *maghuul*.

جهل *gahl* /n/ **1** ignorance. *ʃil-gahl[a] ɛadiww il-madaniyya* ignorance is the enemy of civilization. **2** youthfulness.

جاهل *gaahil* /pl *gahala, guhala, guhhaal, guhhal*/ **1** /n/ ignorant and foolish person. *min naṣaḥ gaahil ɛadaa [prov]* give advice to someone ignorant and you will only make an enemy of him. *ʃig-gaahil ɛadiww[i] nafs-u [prov]* the ignorant is his own enemy. **2** /adj/ **2a** ignorant. **2b** young, youthful. *ɋabil-ni gadaɛ gaahil sinn-u ma-yzid-f[i] ɛala ɛifriin sana* a young lad met me who wasn't more than twenty years old.

جاهلى *gaahili* /adj/ pagan, pre-Islamic. *ʃil-ɛaṣr il-gaahili* pre-Islamic period.

الجاهليّة *ʃil-gaahiliyya↑* /n/ the pre-Islamic era.

مجهول *maghuul* **1** /adj */ unknown, anonymous. *ʃil-gundi l-maghuul* the Unknown Soldier. **2** /n pl *magahiil/ [math]* unknown, unknown quantity.

أجهل *ʃaghal* /el/ **1** more/most ignorant, more/most foolish. *ʃaghal min daabba* ≈ dumber than an ox. **2** more/most youthful.

جهول *gahuul* /adj */ ignominious.

مجاهل *magaahil* /pl n/ unknown regions. *magaahil ʃifriqya* darkest Africa.

جهّل *gahhil* /vt/ to accuse (s.o.) of ignorance. -vn *taghiil*; ava *migahhil*.

اتجاهل *ʃitgaahil* or *ʃiggaahil* /vt/ to ignore. *ʃil-mudiir bi-yitgaahil il-muwaẓẓafiin bituuɛ-u* the boss ignores his employees. -ava *mitgaahil*.

استجهل *ʃistaghil* /vt/ **1** to consider ignorant or stupid. *ʃinta b-tistaghil-ni w-ʃana ʃaɛraf ʃaktar minnak* do you consider me ignorant when I know more than you do? **2** to select for ignorance. *ʃistaghil-lak waaḥid wi-faxxal-u mɛaak* choose a stupid fellow to work with you. -vn *ʃistighaal*; ava *mistaghil*.

ج ه م

جهامة *gahaama* /n/ grim look. *ziiḥ il-gahaama lli ɛala wiff-ak* take that scowl off your face!

جهّم *gahhim (i)* /vi/ to frown, scowl. *dayman yigahhim fi-wiff in-naas* he's always scowling at people. -vn *taghiim*; ava *migahhim*.

تجهيمة *taghiima* /inst n, pl *-aat*/ a scowl, a frown. *ɛalee ḥittit diin taghiima* what a scowl he has!

ج ه ن م

جهنّم *gahannam, guhannam* /fem n/ hell. *ʃin-nahar-da gahannam* today is very hot. *gahannam gooz-i wala gannit ʃabuu-ya [prov]* (better the hell of my husband than the paradise of my father) better suffer as a wife than be a spinster in comfort. ‖ *ḥagar gahannam* silver nitrate.

جهنّمى *gahannami, guhannami* /adj/ devilish, diabolical. *fikra gahannamiyya* one hell of a good idea.

جهنّميّة *gahannamiyya* (also *gahannamiyya ʃokiyya*) /n/ bougainvillea.

ج ه و ر[1]

جهور *gahwar* **1** /vt/ to deepen and widen, cause to grow deeper and wider. *ʃil-midda gahwarit il-garḥ* pus deepened and widened the wound. **2** /vi/ to grow deeper and wider. -vn *gahwara*; ava/pva *migahwar*.

اتجهور *ʃitgahwar* or *ʃiggahwar* /vi/ to be made deeper and wider. -iva *mitgahwar*.

ج ه و ر[2] see [1] ج ه و ر: *gahwari*

ج و اش

جواش *guwaaf* <Fr> /n/ gouache pigment.

ج و اف

جوافة *gawaafa* /coll n, pl *-aat*/ **1** guava tree(s). **2** guava fruit(s).

جوافاية *gawafaaya* /unit n/ **1** a guava tree. **2** a guava fruit.

ج و ان

جوان *juwaan* <Fr *joint*> /n pl *-aat*/ seal, gasket.

ج و ب[1]

جواب *gawaab* /n pl *ʃagwiba*/ **1** answer, reply. ‖ *suʃaal wi-gawaab* (a question and an answer) ≈ briefly. — /pl

gawabaat/ **2** letter. *gawaab tawṣiyya* letter of recommendation. ‖*yiṭɛirif ig-gawaab min ɛinwaan-u [prov]* ≈ you can tell a book from its cover. **3** *[mus]* **3a** octave (to a given tone). **3b** middle register of the *ɛuud*. *gawaab ig-gawaab* the highest register of the *ɛuud*.

جاوب *gaawib* /vt and vi/ to answer, respond to. *ma-tgaawib (ɛala) suʔaal-i* well, answer my question! - vn *migawba*; ava *migaawib*.

اتجاوب *ʔitgaawib* or *ʔiggaawib* /vi/ **1** to be answered (of a question). **2** to be responsive. *ʔitgaawib maɛaaya* he went along with me. - ava/iva *mitgaawib*.

أجاب *ʔagaabˀ* **1** /vi/ to answer, respond. **2** /vt/ to fulfil (a wish). *ʔana ʔagabtⁱ ṭalab-ak* I did what you wanted. *ʔiʃ-ʃeex da daɛwit-u mugaaba* this man's prayers are (always) answered. - vn *ʔigaaba*; ava *mugiib*; pva *mugaab*.

إجابة *ʔigaaba* /n pl *-aat, ʔagwiba/* answer. *waraqit ʔigaaba* answer sheet.

استجوب *ʔistagwib* /vt/ to cross-examine. - vn *ʔistigwaab*; ava *mistagwib*.

استجاب *ʔistagaabˀ* **1** /vi/ to respond, react. *ʔiṭ-ṭalaba ma-b-yistagibuu-ʃ* the students don't respond. **2** /vt and vi/ to answer a prayer (of God). *rabb-i-na stagaab (li-daɛwit-i)* Our Lord answered my prayer. - vn *ʔistigaaba*; ava *mistigiib, mustagiib*.

استجابة *ʔistigaaba* /inst n, pl *-aat/* a response, a reaction.

مستجاب *mustagaab* /adj/ fulfilled, answered. *daɛit-lu daɛwa mustagaaba* she prayed a prayer for him and it was answered.

[2] ج و ب see و ج ب : *ʔigaabi, ʔigabiyya*

ج و ح

اجتاح *ʔigtaaḥ* /vt/ to cover completely, spread over. *ʔil-ʔanfilwanza gtaaḥit il-balad* influenza spread throughout the town. - vn *ʔigtiyaaḥ*; ava *migtaaḥ*; pva *mugtaaḥ*.

ج و خ

جوخ *guux* or *goox* <T *çuḥa* from P> /n pl *ʔagwaax/* baize. ‖*guux ʔimbiryaal* best quality *guux*. - *mashʃ il-guux* flattery, toadying, buttering-up.

جوخة *guuxa* or *gooxa* /unit n, pl *-aat/* piece of baize. ‖*ʔabu guuxa w-ʔabu falla fil-ɋabr b-yiddalla [prov]* both the rich man and the poor man are lowered (finally) into the grave.

ج و د

جاد *gaad (u)* /vi/ to behave generously or openhandedly. *bi-yguud ɛan-naas bi-kull illi ḥilt-u* he gives all he has to help people. ‖*gaadu b-ʔarwaḥ-hum* they sacrificed themselves. - vn *guud*; ava *gaayid*.

جود *guud* /n/ generosity. *ʔil-guud min il-mawguud [prov]* generosity is to give of what is available.

جودة *guuda* /n/ **1** charity, alms. *naas ʔahl guuda wi-karam* charitable and hospitable people. **2** (good) quality, excellence. *yitwaqqaf ɛaleeha guudit il-maḥṣuul* the quality of the crop depends on it. ‖*wig-guuda* response to the mentioning by someone of his home town, as in *ḥaḍrit-ak mineen. - min ʔasyuuṭ. - wig-guuda* 'Where are you from?' 'From Assiut.' 'Excellent people!'

جيّد *gayyid* /adj */ **1** good, excellent. *fi-ṣiḥḥa gayyida* in good health. **2** *[acad]* above average, good. *xadt il-lisans b-taqdiir gayyid* I got my B.A. with the ranking Good (between Satisfactory and Very Good).

أجواد *ʔagwaad* /pl n/ noble and generous people. *muʃ kull-u-hum ʔagwaad zayy ma-nta faakir* not all of them are (as) noble and generous as you believe.

أجاود *ʔagaawid* = *ʔagwaad*.

أجاويد *ʔagawiid* = *ʔagwaad*.

أجود *ʔagwad* /el/ **1** more/most generous. **2** better/best.

جوّاد *gawwaad* /n/ Most Beneficent One (epithet of God).

جوّد *gawwid* /vt and vi/ **1** to do (s.th.) well. *ma-ḥadd ɛaad bi-ygawwid fiṣ-ṣanɛa zayy zamaan* no one (nowadays) makes things as well as they used to be made. **2** to recite the Koran according to traditional principles. - vn *tagwiid*; ava *migawwid*.

تجويد *tagwiid* /n/ art of reciting the Koran (in accordance with certain rules of pronunciation and intonation).

اتجوّد *ʔitgawwid* or *ʔiggawwid* /vi/ to be recited according to traditional principles (of the Koran). *muʃ kifaaya ḥifẓ il-qurʔaan laazim yitgawwid* it isn't sufficient to learn the Koran by heart; it should be correctly recited according to traditional principles. - iva *mitgawwid*.

أجاد *ʔagaadˀ* /vt/ to be highly proficient in, excel in. *bi-yugiid il-ʔingiliizi* he knows English well. - vn *ʔigaada*; ava *mugiid*.

استجود *ʔistagwid* /vt/ to select for superior quality. - vn *ʔistigwaad*; ava *mistagwid*.

[1] ج و ر

جار *gaar [1] (i)* /vt/ to come to the rescue. *lamma tgawwizt rabb-i-na gar-ni min il-beet il-wiḥiʃ da* when I got married God saved me from this terrible house. - vn *giira*; ava *gaayir*.

جيرة *giira* /n/ **1** being near to, living in the neighbour-

hood of. *girit-hum wiḥʃa* living as their neighbours is not nice. **2** realm of responsibility. *ʕana (wqiɛt^{i}) f-girt-ak* I throw myself on your mercy! — /pl *ʕagwaar*/ **3** locality, district. *ʕil-beet fi-giira miʃ baṭṭaala laakin ʠadiim ʃiwayya* the house is in a reasonable neighbourhood but is a bit old.

جار *gaar*^{2} **1** /n pl *giraan*/ neighbour. *ʕiʃtiri l-gaar ʠabl id-daar [prov]* (buy the neighbour before the house) choose where you live for the neighbours, not the house. *ʂabaaḥ il-xeer ya gaar-i - ʕinta fi-daar-ak w-ana f-daar-i [prov]* ≈ neighbourliness lies in courtesy, not intimacy. ‖*saabiɛ gaar* the remotest neighbour, as in *ʕin-nabi waṣṣa ɛala saabiɛ gaar [prov]* the Prophet (Muhammad) preached the love of (even) the remotest neighbour. **2** /prep/ next to. *gaar il-baab* beside the door. *ʠaɛɛad-u gaarak* sit him down beside you.

جارة *gaara*^{2} /n pl *-aat*/ woman neighbour. *ʕik-kalaam liiki ya gaara* (these) words are for you, neighbour (said of talk addressed to one person but intended to be overheard by another).

جوار *giwaar, guwaar*↑ **1** /prep/ next to, in the vicinity of. **2** /n/: *ḥusn il-guwaar* good-neighbourliness. *ḥaʠʠ il-giwaar* rights and duties of neighbourliness (i.e. good neighbourliness, hospitality, protection etc.).

جوارة *guwaara*↓ /n/ nearness, closeness. *ʕana farḥaan bi-guwart-ak* I'm overjoyed at having you near me.

انجار *ʕingaar* /vi/ to be given assistance out of a nasty situation, be rescued. - iva *mingaar*.

جاور *gaawir* /vt/ **1** to be a neighbour to, live next door to or in the vicinity of. *gaawir ɛamm-i* he lived next to my uncle. *min gaawir il-ḥaddaad yitḥiriʠ bi-naar-u [prov]* he who sits next to a blacksmith gets scorched by his fire. **2** to associate with. *min gaawir il-ʠoom ʕarbiɛiin yoom baʠa minhum [prov]* if you mix with people for forty days you become one of them. — /vi/ **3** to make one's abode in the vicinity of a holy place (notably el-Azhar mosque in Cairo, or Mecca or Medina). - vn *migawra*; ava *migaawir*.

مجاور *migaawir* /n */ **1** student or disciple residing in the vicinity of his *ʃeex*.. **2** student boarding at el-Azhar. — *ʕil-migawriin* /prop n/ **3** quarter adjacent to el-Azhar.

أجار *ʕagaar*↑ /vi/ to give aid. ‖ *ʕagaar-ak allaah* God protect you from such things! may you never see the like! as in *ʃakl-a-ha ʕagaar-ak allaah* may you never have to see anyone as ugly as she is! *ʕiṣ-ṣudaaɛ ʕagaar-ak allaah ḥa-yiflaʠ raas-i* I've got a splitting headache - may you never have one like it! - vn *ʕigaara*; ava *migiir*.

مجير *mugiir* /n/ protector (especially as a name of God). ‖*ya mugiir* God save us! as in *wid-dinya naṭṭarit ya mugiir* the rain was so heavy, Lord preserve us!

اتجاور *ʕitgaawir* or *ʕiggaawir* /vi/ to be neighbours, live next door to or in the vicinity of. - ava *mitgaawir*.

استجار *ʕistagaar* /vi/ to appeal for help. *b-astagiir bi-llaah minnak* God help me against you! - vn *ʕistigaara*; ava *mistagiir, mustagiir*.

ج و ر^{2}

جار *gaar*^{3} *(u)* /vi/ **1** to go too far, encroach. *bi-yquul ʕinni gurt^{a} ɛala ʕarḍ-u* he says I annexed some of his land unlawfully. *ʕis-sikkiina gaarit fid-dibiiḥa* the knife cut too deeply into the animal. **2** to commit an outrage, do wrong. *ʕil-gaar gaar wi-law gaar [prov]* your neighbour is your neighbour, even if he acts wrongly. *ʕin gaar ɛaleek gaar-ak ḥawwil baab daar-ak [prov]* if your neighbour wrongs you, move house. *qawaniin gayra* tyrannical laws. - vn *goor*; ava *gaayir*.

جورة *goora* /n pl *-aat*/ **1** instance noun of *goor*. **2** /pl also *giwar, guwar*/ ditch, hole, pit, indentation.

انجار *ʕingaar* /vi/ (impersonal) passive of *gaar*. *ma-yṣaḥḥ^{i}-ʃ yingaar ɛalee kida* it is not right that he should be wronged in this way. - iva *mingaar*.

ج و ز^{1}

جاز *gaaz*^{2} *(u)* /vi/ **1** to be fitting, be correct. *ʕik-kalam-da ma-yguz-ʃ^{i} minnak* you shouldn't say things like that! **2** /impers/ it was permitted, it was allowed. *ʕir-raagil yiguz-lu ʕarbaɛ sittaat* a man is permitted four wives. - vn *gawaaz*; ava *gaayiz*.

¶ *gaaz ɛala* to take (s.o.) in, deceive. *gaazit ɛaleehum il-ʕawanṭa* the trick worked on them. *yaama gaaz ɛannaas* a lot of tricks have been played on people before!

يجوز *yaguuz* /vi/ modal signalling possibility. *yaguuz ʕinnaha miʃ ḥa-tiigi* she may not come. *min il-gaayiz* it is possible. *gaayiz ma-ɛagabituu-ʃ* maybe he didn't like her. *ḥa-tiigi bukra.* - *gaayiz* 'Will you come tomorrow?' 'Perhaps.' - ava *gaayiz*.

جواز *gawaaz*^{1} /n pl *-aat*/ pass, permit. *gawaaz safar* passport. *gawaaz muruur* permit to pass.

جائزة *gayza* /n pl *gawaayiz*/ prize, award.

إجازة *ʕagaaza, ʕigaaza*↑ /n pl *-aat*/ **1** holiday, leave. *huwwa n-nahar-da miʃ ʕagazt-ak* today isn't your day off. *ʕagaaza maraḍiyya* sick leave. **2**↑ certificate, degree. *xad ʕigaazit id-dukturaah* he obtained his doctorate. see further under ² ج ز ء

جاوز *gaawiz* /vt/ to exceed. *gawzit ḥudud-ha* she overstepped the mark, she went too far. - vn *migawza*; ava *migaawiz*.

اتجاوز ʕitgaawiz or ʕiggaawiz **1** /vt and vi/ to disregard. *ʕil-furuuq iṯ-ṯafiifa di b-nitgawiz-ha* these trifling differences we ignore. *ʔaṭʕaffim ʕinnak titgaawiz ʕan suuʔ taṣarruf-u* I hope you will overlook his misbehaviour. **2**↑ /vt/ to exceed, be in excess of. *ʕil-birovaat ma-titgawiz-fⁱ ʕusbuuʕ* the tests do not take more than a week. - ava *mitgaawiz*.

² ج و ز see also ز و ج

جوز *gawaz (i)* /vt/ to make double. *ʕigwiz il-ḥabl* make the rope double! - vn *gawazaan*; ava *gaawiz*; pva *magwuuz*.

جوز *gooz*¹ /n pl *ʔagwaaz, gizaan*/ **1** husband. — /pl *ʔagwaaz, giwaaz*/ **2** pair. *gooz ḥamaam* a brace of pigeons. *big-gooz* in pairs. *liʕbit gooz walla fard* the game of 'odd or even'. **3** front pair of teeth (of a ruminant). *kasar gooz [rur]* to lose two (front) teeth (of an animal).

¶ *ʔagwaazan: ʔagwaazan wi-ʔafraadan* to an extreme degree, as in *ʔakal il-ʕalqa ʔagwaazan wi-ʔafraadan* he got a terrible beating.

الجوزاء *ʔil-gawzaaʔ* /n/ *[astrol]* Gemini.

جيزة *giiza* /n/ marrying, marriage. *giizit il-banaat mutʕiba* getting one's daughters married is tiresome.

جواز *gawaaz*² /n/ marriage. *ʕasiimit gawaaz* marriage certificate. *gawaaz ʕala ḥubb* a love-match. *ʕig-gawaaz sutra [prov]* marriage is protection (advice to girls). *ʕig-gawaaz nuṣṣⁱ id-diin* to marry is (to assure oneself of fulfilling) half of one's religion.

جوازة *gawaaza* /pl *-aat*/ a marriage. *di kaanit gawaazit ʕeeh* what kind of a marriage was this! ‖*gawaazit naṣaara* an unbreakable relationship. - *ʕimʃi f-ganaaza wala timʃi f-gawaaza [prov]* better escort a funeral than involve yourself in marriage negotiations (as the results of the latter may be more distressing than the former).

جوّازى *gawwaazi* /adj invar/ *[rur]* drawn or worked by a pair of animals. *saqya gawwaazi* water-wheel turned by two animals (opposite each other).

مجوز *migwiz* /adj invar/ **1** double(d), paired. *ʃii mifrid wi-ʃii migwiz* there is single and there is double. *ʕuqdit watad migwiz* double clove-hitch. *silkⁱ migwiz* double wire. **2** even (of a number).

اتجوز *ʕitgawaz* or *ʕiggawaz* /vi/ to be made double. - iva *mitgiwiz*.

جوّز *gawwiz* /vt/ to effect the marriage of (s.o.) (to). *gawwizuu-ni ḥumaar* they married me to an ass. ‖*gawwizu miʃkaaḥ li-riima - ma ʕala l-itneen ʕiima [prov]* ≈ these nobodies deserve each other! - ava/pva *migawwiz*.

اتجوّز *ʕitgawwiz* or *ʕiggawwiz* **1** /vt/ to marry, wed. *ʕitgawwizit duktoor* she married a doctor. **2** /vi/ to get married. *miʃ ʕaayiz yitgawwiz ʔabadan* he doesn't ever want to get married. - ava *mitgawwiz*.

¶ *ʕitgawwiz ʕalee(ha)* he married another wife in addition to (her).

³ ج و ز

جوز *gooz*² /coll n/ walnut(s), walnut tree(s). ‖*gooz iṯ-ṯiib* nutmeg(s). - *gooz hind* coconut(s).

جوزة *gooza* /n/ **1** /unit n, pl *-aat*/ a walnut. ‖*goozit ir-raqaba* Adam's apple. **2** /pl *giwaz*/ type of hand-held water-pipe with a water-holder made out of a coconut or substitute (e.g., a jam jar) and a cane stem (see Pl.I, 7). **3** perforated mug used in the making of *kunaafa*.

جوزاية *gozaaya* /unit n/ a walnut.

جوزيّة *goziyya* /n/ confection of syrup and coconut.

ج و ط see ج و ى ط: *gawiiṭ*

ج و ع

جاع *gaaʕ (u)* /vi/ to become hungry. *yixaaf yifuxxⁱ la-yguuʕ* he's afraid to excrete lest he hunger (said of a miser). *ʕil-firaan tudxul beet-u tguuʕ* rats (which) enter his house starve. - vn *guuʕ*; ava *gaʕaan, gaayiʕ*.

جوع *guuʕ* /n/ hunger. *ʕig-guuʕ kaafir [prov]* ≈ hunger can drive one to do anything.

جوعة *guuʕa* /pl *-aat*/ instance noun of *guuʕ*. ‖*ʃabaʕa baʕdⁱ guuʕa* see *ʃabaʕa*.

جعان، جوعان *gaʕaan* /adj * and pl *gawaaʕa*/ hungry. *ʕig-gaʕaan yiḥlam bi-suuq il-ʕeef [prov]* (the hungry man dreams of the bread market) one's aspirations are determined by one's needs. *ʕig-gaʕaan yiqarqaʃ iz-zalaṭ* (a hungry man will chew gravel) need forces one to accept what one would normally despise. *fuut ʕala ʕadiww-ak gaʕaan wala tfut-fⁱ ʕalee ʕiryaan [prov]* (pass by your enemy hungry, since he will not detect your hardship, but not naked, since that would betray your need) shame and weakness lie not in poverty but in exposing oneself to accusations of indecency.

أجوع *ʔagwaʕ* /el/ more/most hungry. ‖*dool ʔagwaʕ naas* they are the meanest people you can imagine.

مجاعة *magaaʕa* /n pl *-aat*/ famine.

جوّع *gawwaʕ* /vt/ to make hungry. *riiḥit il-ʔakl gawwaʕit-ni* the smell of the food made me hungry. *da mgawwaʕ ʕiyaal-u* he does not give his children enough to eat. - vn *tagwiiʕ*; ava *migawwaʕ*.

اتجوّع *ʕitgawwaʕ* or *ʕiggawwaʕ* /vi/ to be made hungry. - iva *mitgawwaʕ*.

استجوع *ʕistagwaʕ* /vt/ to consider hungry. *laazim istagwaʕuu-k lamma-dduu-lak il-ʔakl* they must have

thought you were hungry since they gave you food. - vn *ʕistigwaaɛ*; ava *mistagwaɛ*.

ج و ف [1]

جوف *goof* /n/ inside, interior. *goof il-ʔizaaza* the inside of the bottle. *goof il-ʔarḍ* the interior of the Earth. *fii ḥaraqaan fi-goof-i* there's a burning in my stomach.

جوفي *gawfi* /adj/ subterranean. *miyaah gawfiyya* subterranean water.

أجوف *ʔagwaf* /adj, fem *gawfaaʔ*, pl *guuf*/ hollow, concave. ‖*dayman kalaam-u ʔagwaf* he always talks nonsense.

جوّف *gawwif* /vt/ **1** to hollow out, make concave. **2** to gut. - vn *tagwiif*; ava/pva *migawwif*.

تجويفة *tagwiifa* /n pl *tagawiif, tagwifaat*/ cavity, hollow. *tagwiifit il-ʔiid* the hollow of the hand.

اتجوّف *ʔitgawwif* or *ʔiggawwif* /vi/ **1** to be hollowed, be made concave. **2** to be gutted. - iva *mitgawwif*.

ج و ف [2] see ج و ا ف: *gawaafa, gawafaaya*

ج و ق

جوق *gooq* = *gooqa*.

جوقة *gooqa* /n pl -*aat*/ **1** musical band, musical troupe. *gooqit zaar* a troupe performing at the *zaar*. **2** theatrical group. **3** crowd, gathering, group. ‖*ga wi-mɛaa g-gooqa btaɛt-u* he came and brought his clique with him.

ج و ل [1]

جال *gaal (u)* /vi/ to move around, go about. *ʔil-bayyaaɛa l-gayliin* street hawkers. *ʔeeh illi yguul fi-xaṭr-ak* what's going on in your mind? ‖*yiṣuul wi-yguul* he hangs around with people (especially women). - vn *gawalaan*; ava *gaayil*.

جولة *gawla, goola* /n pl -*aat*/ **1** round (in boxing, wrestling etc.). **2** tour. *gawla ntixabiyya* election tour.

جوّال *gawwaal* /n pl *gawwaala*/ Senior Scout, Rover.

مجال *magaal* /n pl -*aat*/ **1** sphere of activity. *fi-magaal it-taɛliim* in the field of education. **2** scope (for activity), range. *ma-fii-ʃ magaal lil-liɛb* there's no scope for mucking about. *magaal maxnaṭiisi* magnetic field.

اتجوّل *ʔitgawwil* or *ʔiggawwil* /vi/ to go around, move from place to place. *ḥaẓr it-tagawwul* curfew. *bayyaaɛ mutagawwil* street hawker. - vn *tagawwul*; ava *mutagawwil*.

ج و ل [2]

جول *goolʔ* <Engl> /n/ *[soccer]* **1** goal (the physical structure). **2** goal (the scored point). **3** (also *gool kiibar*) goal-keeper. - also *goon*.

ج و ن [1]

جون *goon* <Engl> /n pl *ʔigwaan, giwaan*/ *[soccer]* **1** goal (the physical structure). **2** goal (the scored point). **3** goal-keeper. - also *goolʔ*.

ج و ن [2] see also ج و و [2]

جوّن *gawwin* **1** /vt/ to cause to go deep or far (into s.th). *gawwin il-musmaar fi-qalb il-ḥeeṭa* he drove the nail deep into the wall. **2** /vi/ to go deep or far (into s.th). *ma-tgawwin-ʃ bɛiid fil-mayya ʔaḥsan hinaak ʏawiiṭ* don't swim too far; it is deep out there. - vn *tagwiin*; ava *migawwin*.

اتجوّن *ʔitgawwin* or *ʔiggawwin* /vi/ **1** to go deep or far (into s.th.). *ʔitgawwinu fiṣ-ṣaḥra l-ḥadd[i] ma taahu* they went so far out into the desert that they got lost. **2** to be made to go deep or far (into s.th.). - ava/iva *mitgawwin*.

ج و ن [3] see ج و ا ن: *guwaan*

ج و ن ت ي

جونتي *guwanti, gawanti* <It *guanti*> /n pl -*aat*/ pair of gloves. *fardit guwanti* a (single) glove. *maskiin goz-ha mɛaaha zayy ig-guwanti - ma-tilbis-uu-ʃ illa-mma tḥiss[i] bil-bard* ≈ poor husband! she only remembers him when she needs money.

ج و ه ر

جوهر *gawharʔ* /n/ essence, crux. *gawhar il-mawḍuuɛ* the crux of the matter.

جوهري *gawhariʔ* /adj/ essential. *ɛunṣur gawhari* an essential factor.

جوهرة *gohara* /n pl *gawaahir*/ **1** jewel, gem. ‖*ʔig-gohara l-maṣuuna* (the well-kept jewel) the wife. *-gawaahir ya ɛinab [vendor's cry]* grapes like jewels! **2** eye of an animal (food).

جواهرجي *gawahirgi* /n pl -*yya*/ jeweler.

مجوهر *mugoohar* /adj/ hard and shining.

مجوهرات *migawharaat* /pl n/ jewels, jewelry.

مجوهراتي *migawharaati* /n pl -*yya*/ jeweler.

ج و و [1]

جوّ *gaww* /n/ **1** air, atmosphere. *ɛayziin nixayyar gaww* we want to get a change of air. ‖*raaḥ fil-gaww* it disappeared entirely. **2** weather, climate. *ʔig-gaww[i] laṭiif in-nahar-da* the weather is pleasant today. — /pl *ʔagwaaʔ*/ **3** atmosphere, mood. *gaww[i] ɛilmi* an academic atmosphere. *gaww[i] ʃaaɛiri* a poetic atmos-

phere. *ʕaʃaan yiʕmil gaww[i] mnaasib* in order to create a suitable atmosphere. ‖*huwwa ʕaamil li-nafs-u gaww* he has created an aura for himself. - *kal ig-gaww* he stole the limelight. - *ʃil-waaḥid laazim yitmaʃʃa maʕa l-gaww* ≈ one must bend with the wind. **4** girlfriend, boyfriend. *hiyya di g-gaww[i] btaaʕ-i* that is my girlfriend.

جوّى *gawwi* /adj */ pertaining to air, atmospheric. *bariid gawwi* airmail. *ɣaara gawwiyya* air raid. *ʃiḍ-ḍaɣṭ ig-gawwi* atmospheric pressure. *ʃis-silaaḥ il-gawwi* the Air Force.

ج و و [2]

جوه، جوّا *guwwa* **1** /prep, w pron suff *guwwaa-*/ inside. *guwwa l-beet* inside the house. *ʃil-xazna guwwaaha l-filuus* the safe has the money inside it. **2** /adv/ inside. *ṭiliʕna min guwwa* we emerged from inside. *ʃimsaḥ-u guwwa w-barra* clean it inside and out.

جوّانى *guwwaani* /adj */ inner, internal. *kawitʃ[i] guwwaani* inner tube. *ʃil-maṣuura g-guwwaniyya* the inside pipe. see further under ج و ن [2]

ج و ى ط

جويط *gawiiṭ* <T *cıvata*> /n pl *gawaayiṭ*/ peg.

ج ى

جا، جه *ga, gih (yiigi)* /vt and vi/ **1** to come (to), arrive (at). *lissa ma-gaa-ʃ* he hasn't come yet. *ma-tguu-ʃ ʃilla biiha* don't come without her! *ʒaman-ha gayya* she'll be here any minute now. *ʃis-sana g-gayya* next year. *ga badri* he came early. *gat waxri* she came late. *gum fil-maʕaad* they came at the appointed time. *bi-ygii-li* (or *bi-ygii-ni) kull[i] yoom* he comes to me every day. *bi-yiigi ʕala ʃ-ʃakl[i] da* it comes in this form. *ʃawwil ma gaa-li* (or *gaa-ni) l-ʕaya* when I first got ill. *gat-lu* (or *gat-u) n-nooba* he had a seizure. *mirwaaḥ wi-mgiyy* going and coming. ‖*zayy[i] ma tiigi tiigi* come what may. - *raaḥit il-ʃayyaam wi-gat il-ʃayyaam* time passed. - *gat-ak* (or *ga-k) daha* may a calamity befall you! go to hell! - *ya gat ya raaḥit* it's a matter of luck. - *la raaḥ wala ga* (1) to be without experience, as in *da ʕayyil ṣuɣayyar la raaḥ wala ga* he is just a little boy still wet behind the ears. (2) to be trivial or insignificant, as in *dool itneen gineeh la raaḥu wala gum* it is only a matter of two pounds, nothing to speak about. - *lissa gayy-i-lak fil-kalaam* I'm coming to that now. - *ʃiṭ-ṭalqa ma-gat-ʃ[i] fiiha* the shot missed it. - *ʃagi-lha ʃmaal - tigii-li ymiin* she and I are always at loggerheads with one another. - *ʃinta gayy* are you in (this round of the game)? are you playing? **2** to happen to be, turn out to be. *ʃil-faraḥ ga (f-)yoom il-xamiis* the wedding fell on Thursday. *ʃil-ḥamdu li-llaah - gat saliima* thank God! it turned out all right. **3** to be in accord (with), be comparable (with). *ʃufna beet yiigi zayy[i] bet-na* we saw a house comparable with our house. *ʃinta ma-tgii-ʃ ḥitta minni* you aren't a patch on me! *ʕarabiyya xurda zayy[i] di tiigi feen gamb il-marseedis* how could a rattletrap like this be compared with a Mercedes! *huwwa ma-ygii-ʃ fi-ḍufr-i* he's not worth my finger nail! *loon yiigi ʕala wiff-i* a colour that suits my face. *ʃil-fustaan ga ʕaleeki* (1) the dress suited you. (2) the dress fitted you. *ʃig-gazma di ma-tgii-ʃ (ʕala) qadd-i* these shoes won't fit me. ‖*wi-di tiigi* can that really be right? - *yiigi ...* approximately, as in *yiigi kiilu laḥma* about a kilo of meat, *qaʕadt[i] yiigi nuṣṣ[i] saaʕa* I sat for about half an hour. - *hawa... gayy[a] ʕala hawa...* ≈ the two are perfectly compatible, as in *di bint[i] laṭiifa qawi - hawaa-ha gayy[a] ʕala hawaa-ya* she's a very nice girl; we hit it off together perfectly. – /pre-verb/ **4** to up and (do s.th.), make a move to (do s.th.). *ga yimsik is-samaka giryit* he was about to grab the fish when it darted away. *kull[i] ma ʃaagi ʃastaḥamma m-alaqii-ʃ mayya* every time I come to take a bath I find there's no water. *ʃawwil ma ʃuft-u geet maasik fii* as soon as I saw him, I went and grabbed him. *ga xabṭ-u qalam* he upped and slapped him. - vn *migiyy*; ava *gayy, gaay*.

¶ *ga ʕala* to go against (s.o.), especially for reasons of policy rather than conviction. *lamma yiḥṣal xinaaqa fil-ʕeela dayman bi-yiigi ʕala mraat-u* whenever there is a quarrel in the family he makes his wife give in (for the sake of peace). *ʕaʃaan il-ʕiʃra ḥ-aagi ʕala nafs-i w-ʃaṣalḥ-u ʃana* for the sake of our friendship I'll climb down and make things up with him.

مجيّة، مجيئة *migiyya* /inst n, pl *-aat*/ a coming.

جيّة *gayya* /inst n, pl *-aat*/ a coming. *gih gayyit xeer* he came bringing good fortune with him.

ج ى ب [1]

جاب *gaab (i)* /vt/ **1** to bring, fetch. *bi-tgiib il-ʃawlaad min il-madrasa* she fetches the children from school. *gaabit raagil yirakkib laha n-nuur* she brought in a man to install the electricity for her. *mumkin ʃagiib il-ʕarabiyya wara* may I back up the car? ‖*gaab-u l-ʃarq* (1) he threw him to the ground. (2) he destroyed his future, career etc. - *gaab xabar-u* he put an end to him. - *rabb-i-na ygiib taʕab-ak bi-fayda* may the Lord reward your efforts! - *ʃeef gaab li-gaab* how can there be any comparison (between these two things)? - *maʕrift-u tgiib wara* to know him is a disadvantage. - *tiʕiif wi-tgib-li [women]* (expression of gratitude for a gift) ≈ may

you live long and continue to provide for me! -*ʔadd is-simsima wi-tgiib il-xeel milaggima*. - *kilma* (a riddle) ≈ (what is) the size of a sesame seed and can draw up an army? -a word. **2** to produce, yield, bring forth. *ʕil-ɛimaara bi-tigib-lu talatiin gineeh fiʃ-ʃahr* the building brings him in thirty pounds a month (in rent). *lissa ma-gabit-ʃ*^{i} *ɛyaal* she hasn't had any children yet. *bi-ygiib damm*^{i} *min manaxiir-u* he has a nosebleed. *miin gaab ig-goon* who scored the goal? *ɛawziz ʕagiib ʕaktar min tisɛiin fil-miyya fil-imtiḥaan* I want to get more than ninety percent in the exam. *ɛawziin bass*^{i} *ngiib ḥaqq-u* (we don't care about profit,) we just want to realize its cost. ‖*gaab illi f-baṭn-u* (1) he vomited. (2) he confessed all. -*gaab ɛala nafs-u* he ejaculated. -*gab-ha ɛala balaaṭa* he spoke frankly, he laid his cards on the table. -*gaab fi-sirt-ak* he gossiped about you. -*ʕinta fakir-ni gibt*^{a} *ḥaaga min ɛandi* do you think I made it all up? -*ma-ygib-ha ʕilla rigal-ha* ≈ only those with a special ability can do it (said of, or to, one who succeeds where others fail). **3** to cause, bring on, bring about. *bi-tgiib il-maraḍ* it causes illness. *gibt-u l-nafs-ak* you brought it upon yourself. *gibt*^{i} *lit-tuggaar il-kafya* I brought disaster on the merchants. **4** to reach, arrive, get as far as. *mafruuḍ nigiib il-barr it-taani baɛd*^{i} *nuṣṣ*^{i} *saaɛa* we should reach the other shore in half an hour. *zaɛɛit il-marakbi gaabit il-barr* the boatman's cry reached the shore. -vn *gayabaan*; ava *gaayib*.

مجابة *magaaba* /n pl *magaayib*/ act of bringing. *yaama gab laha magaayib ma-lhaa-ʃ ɛadad* he brought her innumerable gifts.

اتجاب *ʕitgaab* or *ʕiggaab* /vi/ passive of *gaab*. -iva *mitgaab*.

انجاب *ʕingaab* = *ʕitgaab*. -iva *mingaab*.

² (ج ى ب)

جيب *geeb* /n pl *giyuub, guyuub*/ **1** pocket. *dafaɛ min geeb-u* he paid out of his own pocket. *huwwa f-geeb-i* I've got him in my pocket, he is at my beck and call. *ʕilli f-geeb-i f-geeb-ak* all I have is yours. ‖*ʕabu geeb maxruuq* spendthrift. -*ʕaṣḥaab ig-giyuub it-tiqiila* the well-off. -*guyuub ʕanfiyya [anat]* sinuses. **2** sine.

جيب *jiib* <Engl>: *ɛarabiyya jiib* /pl *ɛarabiyyaat jiib*/ jeep.

جيبة *jiiba* <Fr *jupe*> /n pl *-aat*/ skirt.

ج ى ح see ج و ح : *ʕigtiyaaḥ*

ج ى د see ج و د : *gayyid*

¹ ج ى ر

جير *giir* /n/ **1** lime. ‖*giir ḥayy*. quick-lime. **2** chalk.

جيرى *giiri* /adj/ calcareous. *ḥagar giiri* limestone. *madda giriyya [dent]* tartar.

جيّارة *gayyaara* /n pl *-aat*/ limekiln.

جيّر *gayyar* **1** /vt/ to render lustreless, give a matt finish to. **2** /vi/ to become lustreless. -vn *tagyiir*; ava/pva *migayyar*.

اتجيّر *ʕitgayyar* or *ʕiggayyar* /vi/ to be (made) lustreless, be given a matt finish. -iva *mitgayyar*.

² ج ى ر see ¹ ج و ر : *giira*

¹ ج ى ز

الجيزة *ʕig-giiza* /prop n/ Guiza, town and province on the west bank of the Nile, the town being considered part of greater Cairo.

جيزاوى *gizaawi* **1** /adj */ Guizan. **2** /n */ a Guizan.

² ج ى ز see ² ج و ز : *giiza*

ج ى ش

جيش *geeʃ* /n pl *giyuuʃ*/ army.

جيشى *geeʃi* /adj invar/ army, pertaining to an army or armies. *gazma geeʃi* a pair of army boots.

الجيوشى *ʕig-giyuuʃi* **1** epithet of *seef ʕibn zi yazan* (q.v.). **2** *gaamiɛ ig-giyuuʃi* the Giyushi Mosque, an old and conspicuous mosque on the Muqattam Hills, built at the instigation of *ʕamiir ig-giyuuʃ* Badr el-Jamali late in the eleventh century.

ج ى ص

جيص *giiṣ* <Copt> /n pl *ʕigyaaṣ, giyaaṣ*/ (noisy) fart. ‖*giiṣ fi-ɛafaṣ* inconsequential talk or activity.

جيّص *gayyaṣ* /vi/ to fart (with noise). -vn *tagyiiṣ*; ava *migayyaṣ*.

ج ى ف

جيفة *giifa* /n pl *giyaf*/ rotting corpse or carcass.

جيّف *gayyif* /vi/ to become putrid, stink (of a dead body). -ava *migayyif*.

ج ى ل

جيل *giil* /n pl *ʕagyaal*/ generation.

ج ى ل ج

جيولوجيا *jiyulujia* <prob It> /n/ geology.

جيولوجى *jiyuloojī* **1** /adj/ geological. **2** /n */ geologist.

(ج ى م)

جيم *giim* /fem n, pl *-aat*/ fifth letter of the Arabic alphabet. ‖*siin wi-giim* questioning, cross-examination, as in *xad-ni f-siin wi-giim* he started questioning me. - *ʕil-ħaala giim* (1) *[obsol]* there is an emergency alert. (2) the (money) situation is very tight.

جيم *geem* <Engl> /n pl *-aat*/ game (in tennis or ping-pong).

ج ى ى و ن

جيّون *gayyuun* <Fr *guillaume*> /n pl *-aat*/ *[carp]* plough plane, rabbet plane.

ح

ح
ح *ħa-* (also *ha-*) /ħ- or *h-* before 1st pers sing/ verb prefix with imperfect indicating future action. *ħa-tiigi ʕimta* when will you come? *ʕana ɛaarif ħa-tquul ʕeeh* I know what you're going to say. *kaan ħa-yʃuf-ha* he was going to see her.

(ح ا)
حا *ħaa¹, ħaa¹* sound made to urge on a donkey ≈ gee-up! - also *ħarr*.
حا *ħaa², ħaa²* /fem n, pl *ħahaat*/ sixth letter of the Arabic alphabet. - also *ħaaʃ, ħah*.

ح ا ء
حاء *ħaaʃ* /fem n, pl *-aat*/ sixth letter of the Arabic alphabet. - also *ħaa, ħaa, ħah*.

ح ا ب ا see also ح ب ى ¹
حابا *ħaaba: ħaaba ħaaba (ya rabb¹* (or *ya-lli) tgii-ni)* **1** encouragement to a child to crawl or toddle towards one. **2** *[children]* a chant, in ball-catching games, particularly aimed at distracting other catchers ≈ it's coming, it's coming!

ح ا ت ا
حاتا *ħaata: ħaata baata* /invar/ destitute, penniless. *ʕana ħaata baata* ≈ I haven't got a thing to my name.

ح ا ت ى
حاتى *ħaati* /n pl *-yya*/ kebab-seller, kebab restaurateur.

ح ا ج see ح و ج ¹: *ħaaga*

ح ا د ى ¹
حادى *ħaadi¹: ħaadi baadi siid-i mħammad il-baɤdaadi* (or *ʔil-buɤdaadi) ʃaal-u w-ħaʈʈ-u ɛalaa-di* children's counting rhyme ≈ eenie-meenie-mynie-mo etc.

ح ا د ى ²see ح د ا ش ر

ح ا ر see ح و ر ¹: *ħaara*

ح ا ف see ح ف ف: *ħaaf*

ح ا ل see ح و ل: *ħaal, ħaala, ħaali*

ح ا ن ا
حانا *ħaana: ħaana w-baana* or *ħaana w-maana* this and that, one thing and another, as in *been ħaana w-maana ɖayyaɛna ɛaʃaa-na* (what with this and that we've lost our supper) we've been involved with so many trivialities that we've lost our chance of having what's important, *sabu-haa-lak been ħaana w-baana* they left you completely up in the air about it.

ح ب ا see ح ب ى: *ħaba*

ح ب ب ¹
حبّ *ħabb¹ (i)* **1** /vt/ to like, love. *bi-tħibb il-musiiqa* do you like music? *b-aħibb il-bint¹ di* I love that girl. *ʔilli yħibb¹ nafs-u tikrah-u n-naas [prov]* who loves himself is hated by others. ‖*ħabb¹ wi-ndabb* he fell madly in love. - *ʔir-rigl¹ tdibb¹ maṭraħ ma tħibb [prov]* ≈ one is guided by one's affections. - *ʔir-rizq¹ yħibb il-xiffiyya [prov]* ≈ you have to look lively to make a living. **2** /preverb/ to like to. *tiħibb¹ tismaɛ-ha* would you like to hear it? — /vt and vi/ **3** to kiss (as a sign of respect). ‖*ħibb³ (ɛala) raas-u* kiss and make up with him! - *ħabbit-ak il-ɛafya* may good health kiss you! (in response to e.g., *xallet-kum bi-ɛafya* stay in good health.

-ħabbit-ak ʕuxt-ak may your spirit-sister kiss you! (used as *ħabbit-ak il-ɛafya*). *-ħabb-ak burṣ* see *burṣ*. -vn *ħubb, maħabba, ħababaan*; ava *ħaabib*; pva *maħbuub*.

حبّ *ħubb* /n/ love, passionate love. ‖*ħubb iz-zaat* selfishness.

محبّة *maħabba* /n/ love. *kull*^{i} *ʕinsaan miħtaag lil-maħabba* every human being needs to be loved.

محبوب *maħbuub* /n */ **1** beloved. **2** /no pl/ **2a** *[obsol]* gold pound. **2b** *[slang]* a pound note.

حبّ *ħibb* /n pl *ʕaħbaab*/ beloved.

حبّى *ħibbi* /adj/ friendly (of a game). *matʃ*^{i} *ħibbi* a friendly match.

أحبّ *ʕaħabb*^{i} /el/ more/most loved.

حبيب *ħabiib* /n/ **1** /pl *ħabaayib, ʕaħbaab*/ dear one, friend. *ya ħabiib-i* my dear (a common form of address). *ʕil-ɛiyaal ʕaħbaab allaah* children are the loved ones of God. *ʈuul ɛumr il-baladeen ħabaayib* the two countries have always been on good terms. *ʕin kaan ħabiib-ak ɛasal ma-tilħas-uu-ʃ kull-u [prov]* (should your friend be honey, don't lick him all away) ≈ don't abuse the kindness of a friend. *ɖarb il-ħabiib zayy*^{i} *ʕakl iz-zibiib [prov]* being beaten by a friend is as (good as) eating raisins. ‖*ʕil-ħabiib* the Beloved (epithet of the Prophet Muhammad). **2** /pl *ʕaħibba*/ lover. *ʕil-ʕaħibba tneen itneen* lovers love to walk together (said to tease strolling couples etc.).

حبيبة *ħabiiba* /n pl *-aat, ħabaayib, ʕaħbaab*/ **1** dear woman, female friend. ‖*sitt il-ħabaayib* mother. **2** sweetheart, girlfriend.

حبّوب *ħabbuub* /adj */ likeable, amiable.

حبّيب *ħabbiib* /n pl *ħabbiiba*/ *[deris]* (inveterate) lover. *ʕayyaam il-madrasa kunt*^{a} *ħabbiib* when I was at school I was always in love. ‖*ʃawaariɛ il-ħabbiiba* the dimly-lit streets favoured by lovers, lovers' lanes.

اتحبّ *ʕitħabb* /vi/ to be loved, be liked. -iva *mitħabb*.

انحبّ *ʕinħabb* = *ʕitħabb*. -iva *minħabb*.

حبّب *ħabbib*^{1} /vt/ to cause to feel love or liking. *ʕilli ħabbib-ni fii ʕinnu muxliṣ* what made me like him is his sincerity. -vn *taħbiib*; ava *miħabbib*; pva *muħabbab*↑.

اتحبّب *ʕitħabbib* /vi/ **1** to ingratiate oneself, make up (to s.o.). **2** to be made to like or love. -ava/iva *mitħabbib*.

أحبّ *ʕaħabb*^{2}↑ = *ħabb*^{1}. -ava/pva *muħibb*.

محبّ *muħibb* /adj */ loving, kind, benevolent. *raagil muħibb*^{i} *lin-naas* a man well-disposed to his fellows. ‖*baṣalit il-muħibb*^{i} *xaruuf [prov]* (an onion eaten with a loving friend is as good as a sheep) ≈ a cheerful look makes a dish a feast.

يستحبّ *yustaħabb* /vi/ to be desirable. *ʕiz-ziyaara ma-tustaħabb*^{i}*-ʃ saaɛit il-ɣada* visiting is not desirable at lunch time. -iva *mustaħabb*.

ح ب ب^{2}

حبّ *ħabb*^{2} /coll n, pl *ħubuub*/ **1** seed(s), grain(s). *wi-baɛdeen yigri fii ʕil-laban wi-yimla l-ħabb* then the sap rises and fills the seed. *ħubuub il-liqaaħ* pollen grains. **2** pill(s). *ħubuub manɛ il-ħaml* birth-control pills. **3** pimple(s), papule(s). ‖*ħabb if-ʃabaab* acne. **4** bead(s).

حبّة *ħabba* /unit n, pl *-aat*/ **1** a seed, a grain. ‖*yiɛmil mil-ħabba ɢubba [prov]* ≈ he makes a mountain out of a molehill. *-ħabbit il-ɛeen* pupil of the eye. *-ya ħabbit ɛeen-i* ≈ my poor dear! (expression of affectionate sympathy). *-li-ħabbit ɛeen(-u)* (full) to the brim. **2** a pill. **3** a pimple. **4** a bead. **5** a single specimen (of certain collective nouns). *ħabbit ɢuuṭa* a tomato. — /no pl/ **6** small quantity, smidgen. *bi-nħammar ħabbit ruzz*^{i} *fis-samna* we brown a little rice in the *samna*. ‖*ħabba (b-)ħabba* little by little. **7** short period of time. *ʕistanna ħabba* wait a bit. *kaanit ʕumm-u twaddii-lu ʕakl*^{i} *kull*^{a} *ħabba* his mother used to bring him food every so often. *b-albis ɢabl*^{i} *m-anzil bi-ħabba ʂɤayyariin* (or *ʂuɤayyara*) I get dressed shortly before going out.

¶ *ħabbiteen* /adv/ somewhat, a bit. *huwwa ʈaaliɛ fiiha ħabbiteen* he fancies himself somewhat. *ɢaɛadna ħabbiteen wayyaahum* we stayed with them for a bit.

حبّاية *ħabbaaya* = *ħabba* 1-4.

حبيبة *ħubeeba* /n pl *-aat*/ a grain, a seed.

حبيبى *ħubaybi* /adj/ granular, grainy. ‖*xaʃab ħubaybi* chipboard. *-ramad ħubaybi* trachoma.

حبّب *ħabbib*^{2} /vi/ **1** to produce seed. *baɛd*^{i} *ma yħabbib ik-kuuz yitfattaħ wi-yistiwi* after it has formed its seed the cob opens and ripens. **2** to come out in pimples. *wasaaxit il-muus xallit raɢabt-i tħabbib* the dirtiness of the razor blade made my neck come out in spots. -vn *taħbiib*; ava *miħabbib*.

محبّب *miħabbib* /adj/ grainy, having a grain (of wood, leather, etc.).

ح ب ب ذ see ح ب ب ز

ح ب ب ز

حبّذا *ħabbaza*↑ /w foll *law* clause/ how nice it is to ..., how much better it would be if .... *(ya) ħabbaza law kaan il-waaħid ɛaarif ism il-ɛamiil wi-yindah-lu bi-sm-u* how much better it is if one knows the customer's name and calls him by it! *(ya) ħabbaza law gibt-i-lna kubbaayit ʃaay* how nice it would be if you brought us a cup of tea!

ح ب ب ه –
حبّهان *ħabbahaan* /coll n/ cardamom.

ح ب ح ب
حبحب *ħabħab* /adj invar/ small, stunted in growth. *baṭṭiix ħabħab* undersized water-melons.

ح ب ر [1]
حبر *ħibr* /n pl *ʕaħbaar*/ ink. ‖ *ħibr[a] ɛala waraq* ≈ empty (written) words. - *ʕumm il-ħibr* or *samak il-ħibr* squid. - *leela zayy il-ħibr* a terrible night.
محبرة *maħbara↑* /n pl *maħaabir*/ inkwell, container for ink.
حبّر *ħabbar* /vt/ to ink over, apply ink to. *bi-yħabbaru looħit ir-rasm* they go over the diagram in ink. - vn *taħbiir*; ava/pva *miħabbar*.
اتحبّر *ʕitħabbar* /vi/ to be inked. *ʕil-kilifehaat bi-titħabbar bi-ħibr[i] ṭbaaɛa* the plates are covered with printer's ink. - iva *mitħabbar*.

ح ب ر [2]
حبر *ħabar* /n/ **1** black rough silk cloth. **2** /coll/ women's outer wrap(s) made of this cloth.
حبرة *ħabara* /unit n, **pl** *-aat*/ woman's outer wrap of black silk or velvet.

ح ب ر [3]
حبارى *ħubaara* /n pl *ħubarayaat*/ bustard.

ح ب ز see ح ب ب ز ا: *ħabbaza*

ح ب س
حبس *ħabas (i)* /vt/ **1** to confine, constrict. *ħabast[i] nafs-i barra* I locked myself out. *ħabas ɛannina l-mayya* he cut off our water supply. ‖ *ħabas nafas-(u)* to hold (one's) breath. - *ħabas damm-(u)* to cause (s.o.) to feel constricted and ill at ease, put a damper on the spirits of. **2** to shut up, imprison. *law ma-dafaɛt[i]-ʃ il-ɣaraama yiħbisuu-k* if you don't pay the fine they'll put you in prison. — /vi/ **3** to finish off a meal (with a cigarette, tea etc.). *haat lina ʃaay niħbis bii (ɛal-ʃakl)* get us some tea to finish off the meal. - vn *ħabs, ħabasaan*; ava *ħaabis*; pva *maħbuus*.
حبس *ħabs* /n/ **1** imprisonment. ‖ *ħabs[i] ɋuflaaq [mil]* confinement to barracks. **2** jail, prison. *xaduu fil-ħabs* they took him to jail.
محبوسة *maħbuusa* /n/ variety of backgammon.
محبس *maħbas* /n pl *maħaabis*/ **1** stopcock. **2** clasp, clip (of a necklace, bracelet etc.).
اتحبس *ʕitħabas* /vi/ passive of *ħabas*. - iva *mitħibis*.
انحبس *ʕinħabas* = *ʕitħabas*. - iva *minħibis*.
حبّس *ħabbis* **1** /vt/ to confine, lock up, imprison (a number of things or a number of times). *ħabbisit il-firaax* she shut up (all) the chickens. **2** /vi/ = *ħabas* 3. - vn *taħbiis*; ava/pva *miħabbis*.
تحبيسة *taħbiisa* /inst n, pl *-aat*/ a cigarette, drink of tea etc., taken at the end of a meal.
اتحبّس *ʕitħabbis* /vi/ passive of *ħabbis*. - iva *mitħabbis*.
احتباس *ʕiħtibaas↑* /n/ impediment. *ʕiħtibaas fil-bool [path]* retention of urine.

ح ب ش [1]
حبّش *ħabbiʃ* /vt and vi/ **1** to make an assortment of, gather a variety of (usually food). *ʕakla mħabbiʃa* a meal including a variety of foods. ‖ *ħabbiʃ il-ħikaaya* he spiced up the story. **2a** to pad, pad out. *bi-nħabbiʃ-ha (or bi-nħabbiʃ ɛaleeha) la-tingiriħ* we pad it over so that it doesn't get scratched. **2b** to fill in, fill up. *ħabbiʃ il-xurm illi fil-ħeeṭa bil-muuna* fill the hole in the wall with mortar. - vn *taħbiiʃ*; ava/pva *miħabbiʃ*.
تحبيشة *taħbiiʃa* /inst n, pl *taħabiiʃ, taħbiʃaat*/ **1** an assortment of snacks. **2** seasoning (of a dish).
اتحبّش *ʕitħabbiʃ* /vi/ passive of *ħabbiʃ*. - iva *mitħabbiʃ*.

ح ب ش [2]
حبش *ħabaʃ* /coll n/ Ethiopians.
الحبشة *ʕil-ħabaʃa* /prop n/ Ethiopia.
حبشي *ħabaʃi* /adj */ **1** Ethiopian, Ethiopic. — /n/ **2** Amharic. **3** /pl *ħabaʃ, ʕaħbaaʃ, ħabaʃa, ħibʃ↓*/ an Ethiopian.

ح ب ك
حبك *ħabak (u, i)* /vt/ **1** to cause to fit exactly. *ʕil-mumarriḍa ħabakit ir-rubaaṭ ɛag-garħ* the nurse tightened the bandage over the wound. *ʕiħbuki l-xaṭa ɛal-ħalla kwayyis* fit the lid properly on the pan. **2** to be (too) precise with (s.th.). *ma-tuħbuk-haa-ʃ* don't be so finicky! **3** *ħabak* or *ħabakit* /impers/ it was necessary, it had to be. *ħabak* (or *ħabakit*) *ʕinnak tiigi tzaɛɛaq-li ɋuddaam in-naas* did you really have to come and give me a row in front of everyone? - vn *ħabk, ħabakaan*; ava *ħaabik*; pva *maħbuuk*.
حبكة *ħabka* /n pl *-aat*/ **1** instance noun of *ħabk*. **2** plot (of a story, play etc.). **3** foundation loop of a crochet pattern. **4** headband on the spine of a book.
اتحبك *ʕitħabak* /vi/ passive of *ħabak*. - iva *mitħibik*.
انحبك *ʕinħabak* = *ʕitħabak*. - iva *minħibik*.
حبّك *ħabbik* /vt/ **1** to cause to fit properly. **2** to make difficult, be finicky with (s.th.). *bi-yħabbik il-ʕumuur* he complicates things. *ʕawwil ziyart-i l-ɛelit-ha kaanit*

miḥabbika ʃwayya the beginning of my visit to her family was a little tense. - vn *taḥbiik*; ava/pva *miḥabbik*.

اتحبّك *ʔitḥabbik* /vi/ passive of *ḥabbik*. - iva *mitḥabbik*.

¹ ح ب ل

حبل *ḥibil (a)* /vi/ **1** to become pregnant. *ḥiblit minni* she got pregnant by me. ‖ *lamma tiḥbal il-baṛla* ≈ when Hell freezes over. **2** to have one's fill, be sick (of s.th.). *ʔil-waaḥid ḥibil wi-wilid mik-kalaam da* I've had my fill of that nonsense! - vn *ḥabal, ḥabalaan*; ava *ḥablaan*.

حبل *ḥabal* /n/ pregnancy. *fustaan il-ḥabal* maternity dress.

حبلة *ḥibla* /fem adj, pl *-iin, ḥabaalaʔ* / pregnant.

حبّل *ḥabbil* /vt/ to make pregnant. ‖ *yiḥabbilu l-baṛla* ≈ they tell fantastic lies. - vn *taḥbiil*; ava/pva *miḥabbil*.

اتحبّل *ʔitḥabbil* /vi/ to be made pregnant. - iva *mitḥabbil*.

² ح ب ل

حبل *ḥabl* /n pl *ḥibaal, ʔiḥbaal*/ rope, cord. *naqṭ il-ḥabl* skipping. *ḥabl[i] ṛasiil* clothes-line. *ḥabl[i] nagaah* life-line. *ʔil-ḥabl is-surri* the umbilical cord. ‖ *laabis kull illi ɛal-ḥabl* ≈ dressed to kill. - *ḥibaal il-mawadda* ties of friendship. - *ḥibaal-u ṭawiila* he takes his own sweet time.

حبّال *ḥabbaal* /n pl *ḥabbaala*/ **1** rope maker. **2** *[constr]* one of a team of workmen who tug the mixing-shovel through cement with a rope.

حابل *ḥaabil: ʔil-ḥaabil ɛala n-naabil* every Tom, Dick and Harry, as in *fi-ramaḍaan tilaaqi l-ḥaabil ɛala n-naabil ʃaayil is-sibḥa* during Ramadan you'll find everybody and his brother carrying prayer beads.

¹ ح ب ى

حبى *ḥaba (i)* /vi/ to crawl on all fours. *ʔil-waad laazim yiḥbi qabl[i] ma yimʃi* a child must crawl before he can walk. - vn *ḥaby*; ava *ḥaabi*. see further under ح ا ب ¹

² ح ب ى

حابى *ḥaaba* /vt/ to show partiality towards (s.o., at s.o. else's expense). - vn *muḥabaah*; ava/pva *miḥaabi*.

اتحابى *ʔitḥaaba* /vi/ passive of *ḥaaba*. - iva *mitḥaabi*.

¹ ح ت ت

حتّ *ḥatt (i)* /vt/ to break, cut or tear pieces off (s.th.), chip away at (s.th.). - vn *ḥatataan*; ava *ḥaatit*; pva *maḥtuut*.

حتّة *ḥitta* /n pl *ḥitat*/ **1** (also pl *ḥittaat*) piece, bit, item. *ḥittit ḥadiid* a piece of iron. *ma-ɛad-ʃ[i] fiyya ḥitta ɛala baɛḍ-a-ha* there is not a bit of me left in one piece. *ʔid-dasta fiiha tnaaʃar ḥitta* there are twelve items in a dozen. ‖ *ḥitta ḥitta* bit by bit, little by little. - *ḥitta bi-* a coin or note worth ..., as in *ḥitta b-xamsa* a five-piastre piece (or note). - *ḥitta waḥda* (1) at one go, straight off, as in *baqa waziir ḥitta waḥda* he became a minister straight off. (2) in one piece, as in *ʔiddii-ni talaata kiilu laḥma ḥitta waḥda* give me three kilos of meat in one piece. - *ʔil-ḥitta btaɛt-u* his girlfriend. - *ḥitat il-maṭbax* the kitchen rags. - *ḥaṭṭ[i] ḥitta fil-fingaan* (or *taḥt[i] dirs-u*) he put a piece of opium in his cup (of coffee) (or in the corner of his mouth). - *ḥa-yaakul min-... ḥitta* to suit perfectly (of clothes), as in *ʔil-mandiil ḥa-yaakul min qurit-ha ḥitta* the kerchief looks bewitching around her forehead. **2a** place, locality. *fii ḥitta warma f-ʔiid-i* there is a swollen place on my hand. *laffeet ɛaleek fi-kull[i] ḥitta* I looked for you everywhere. **2b** district, neighbourhood. *ʔahl il-ḥitta* the people of the neighbourhood. *hiyya ʔaḥla waḥda fil-ḥitta kull-a-ha* she's the prettiest girl in the whole district. **2c** *[euphem]* red light district. — *ḥittit* /no pl/ **3a** a little of, a smidgen of. *ḥittit ɛayyil* a mere scrap of a child. *ḥittit ʔafandi ma-yiswaa-ʃ nikla* a little guy not worth a penny. *ma-fii-ʃ wala ḥittit ḍill* there's not a spot of shade. **3b** /often w additional intensifiers, esp *diin*/ an incredible ..., a real ...! *ʔamma ḥittit ḥufra* what an incredible hole! *ʔallaah yurzuq-kum bi-ḥittit niila* may God send you a real disaster! *ʔimbaariḥ sihirna ḥittit diin sahra* yesterday we had such a wonderful evening! *xaṭabt[i] ḥittit diin xuṭba bint[i] kalb* I gave a bloody fine speech!

حتيتة *ḥiteeta* /n/ small piece, bit. *la ḥitta wala ḥteeta* not the littlest bit.

حتّت *ḥattit* /vt/ to break, cut or tear into small pieces. - vn *taḥtiit*; ava/pva *miḥattit*.

اتحتّت *ʔitḥattit* /vi/ to be broken, cut or torn into small pieces. - iva *mitḥattit*.

² ح ت ت

حتّى *ḥatta* /adv/ **1** even. *di ḥatta maʃhuura fil-ɛeela* she's even renowned within the family. *bi-yruuḥ ʃuɣl-u raakib ʔutubiis walla biskilitta walla ḥatta maaʃi* he goes to work on a bus, or a bicycle, or even walking. *m-amʃii-ʃ ʔilla w-maɛaaya munfaax ḥatta wa-law kunt[i] waxid-ha laffa* I don't go without a pump even if I'm only going for a spin. — /conj/ **2** until. *ʔiftaṛal ṭuul il-leel ḥatta ṭiliɛ in-nahaar* he worked through the night until daybreak. **3** so that, in order that. *ɛamalit ɛayyaana ḥatta yiigi yzur-ha* she pretended to be ill so that he would visit her.

ح ت ت ك
حتتك *ḥatatak: ḥatatak batatak* rapaciously, feverishly, frantically. *nizil ʕala l-ʕeeʃ ḥatatak batatak* he gobbled up the bread ravenously. *nizlit ʕalee ḍarbᵃ ḥatatak batatak* she beat him frenziedly.

ح ت ح ت
حتحت *ḥatḥit* /vt/ to break into small pieces, divide into bits. ‖ *ḥatḥit fil-kalaam* to split hairs. - vn *ḥatḥata*; ava/pva *miḥatḥit*.
اتحتحت *ʔitḥatḥit* /vi/ to be broken into small pieces. - iva *mitḥatḥit*.

ح ت م
حتما *ḥatman* /adv/ decidedly, definitely. *ʔinzili l-balad - ḥatman ḥa-tlaaqi l-qumaaʃ illi-nti ʕawzaa* go into town and you're sure to find the material you want.
حتميّة *ḥatmiyya*↑ /n/ inevitability. *ʔigtimaaʕ bi-nnaaqiʃ fii ʔil-maʕraka w-mutaṭallabat-ha w-ḥatmiyyit-ha* a meeting at which we discuss the battle, its demands and inevitability.
محتوم *maḥtuum* /adj */ inevitable. ‖ *qadar wi-maḥtuum* it's fate and there's nothing one can do about it.
حتّم *ḥattim* /vt/ **1** to demand, decree, make compulsory. *wagb-i yḥattim ʕalayya ṣ-ṣaraaḥa* my duty compels me to be frank. **2** to insist on. *ḥattimit ʕaleena nbaat* she insisted that we stay the night. ‖ *ḥattim raʃy-(u)* to insist wilfully on, as in *ḥattim raʃy-u ʔinnu ysaafir il-balad fi-nuṣṣ il-leel* he would brook no objection to his going to the village in the middle of the night. - vn *taḥtiim*; ava *miḥattim*; pva *muḥattam*.
تحتيمة *taḥtiima* /n pl *-aat, taḥatiim*/ necessity, demand, exigence. ‖ *ʕalee taḥatiim* ≈ he sometimes gets a bee in his bonnet.
اتحتّم *ʔitḥattim* /vi/ **1** to become inevitable. **2** to insist. **3** passive of *ḥattim*. - ava/iva *mitḥattim*.
استحتّم *ʔistiḥattim*↓ = *ʔitḥattim*. - ava *mistiḥattim*.

ح ت ي
حتى *ḥata (i)* /vt and vi/ to smooth-talk. *qaʕad yiḥti ʕaleeha* (or *yiḥtii-ha) lamma xad minha l-fuluus* he worked on her till he got the money from her. - vn *ḥaty*; ava *ḥaati*.

ح ث ث see ² ح س س

ح ج ب
حجب *ḥagab (i)* /vt/ to conceal. *rabb-i-na ḥagab ʕanni n-niʕma* God has hidden His grace from me. - vn *ḥagb, ḥagabaan*; ava *ḥaagib*; pva *maḥguub*.
حاجب *ḥaagib* /n pl *ḥawaagib*/ **1** eyebrow. ‖ *ʔil-ʕeen ma-tiʕlaa-ʃ ʕala l-ḥaagib [prov]* (the eye will never become higher than the eyebrow) (1) polite rejoinder to praise ≈ I wouldn't presume to accept any praise. (2) admonition to respect social class. **2** diaphragm (contraceptive device). – /pl *ḥuggaab*/ **3** doorkeeper, usher. *ḥaagib maḥkama* court usher.
حجاب *ḥigaab* /n pl *ʔiḥgiba, ḥigíba*/ **1a** amulet (usually consisting of a written charm worn on the person). **1b** triangular decoration used in gold jewelry making. **2** /no pl/ **2a** woman's veil that covers the entire face. ‖ *makʃuuf ʕannu l-ḥigaab* he's clairvoyant, he has second sight. - *rafʕ il-ḥigaab* the emancipation of women, women's liberation. **2b** (also *ʔil-ḥigaab il-ḥaagiz*) *[anat]* diaphragm.
اتحجب *ʔitḥagab* /vi/ to be concealed (from sight). - iva *mitḥigib*.
انحجب *ʔinḥagab* = *ʔitḥagab*. - iva *minḥigib*.
حجّب *ḥaggib* /vt/ **1** to cause to wear an amulet. **2** to cover with a veil. - vn *taḥgiib*; ava/pva *miḥaggib*; pva *muḥaggab*↑.
اتحجّب *ʔitḥaggib* /vi/ **1** to wear an amulet, be protected by divine or magical influence. **2** to wear a veil. - ava *mitḥaggib*.
احتجب *ʔiḥtagab* /vi/ to disappear from sight. *ʔiḥtagabit ʕanna l-muddit ʔusbuuʕ* we haven't seen her for a week. - vn *ʔiḥtigaab*; ava *miḥtigib, muḥtagib*.

¹ ح ج ج
حجّ *ḥagg*¹ *(i)* /vi/ to go on pilgrimage (especially to Mecca). *muusim il-ḥigg* the season of the yearly pilgrimage to Mecca. - vn *ḥigg, ḥagg*; ava *ḥaagig*.
حجّة *ḥigga*¹ /inst n, pl *-aat*/ a pilgrimage. ‖ *zu l-ḥigga* Zu l-Higga, twelfth month of the Muslim year (during which the annual pilgrimage takes place).
حاجّ *ḥagg*² /n pl *ḥuggaag*/ **1a** pilgrim, one who has performed the Meccan pilgrimage. **1b** title of, and form of address or reference to, a pilgrim. ‖ *ʔaḥmad zayy il-ḥagg aḥmad [prov]* (Ahmad is as good as Pilgrim Ahmad) ≈ all people are equal whatever their titles. **2** polite form of address to an older man.
حاجّة *ḥagga* /n pl *ḥuggaag*/ **1a** female pilgrim. **1b** title of, and form of address or reference to, a female pilgrim. **2** polite form of address to an older woman.

² ح ج ج
حجّة *ḥigga*² /n pl *ḥigag*/ pretext, excuse. *ma-ʕad-lak-fⁱ ḥigga* you've run out of excuses.

حجّة *ḥugga* /n pl *ḥugag*/ **1** title deed to property. **2** proof, evidence.

اتحجّج *ʔitḥaggig* /vi/ to offer pretexts, make excuses. *kull[i] ma tisʔal-ni ʕan ʕadam noom-i ʔatḥaggig bil-baraʀiit* whenever she asks why I don't get any sleep, I give the fleas as an excuse. ‖ *bi-yitḥaggig bi-faʕr[i] raas-u* he'll make an excuse of anything. - ava *mitḥaggig*.

احتجّ *ʔiḥtagg* /vi/ to complain, protest. *ʔil-ḥakam iḥtagg[a] ʕala l-gumhuur* the referee protested against the (behaviour of) the crowd. - vn *ʔiḥtigaag*; ava *muḥtagg, miḥtagg*.

استحجّج *ʔistiḥaggig↓* /vi/ to offer pretexts, make false excuses. - ava *mistiḥaggig*.

ح ج ر [1]

حجر *ḥagar[1]* /n/ **1** /coll/ stone(s). *ʔil-ḥagar ig-giiri* limestone. **2** /pl *ḥigaara, ʔaḥgaar*/ a stone. *ḥagar rafiid* the Rosetta stone. ‖ *ḥagar id-damm* green stone hollowed out to hold a few drops of blood, worn by women as a (folk) remedy for internal bleeding. - *ʔil-ḥagar il-ʔaswad* sacred stone fixed in one of the corners of the Kaaba. - *ḥagar ḥammaam* or *ḥagar rigleen* pumice stone. - *ḥagar zeet* oilstone. - *ʔaḥgaar kariima* precious stones. - *makanit ḥagar [print]* lithograph machine. - *raas-u zayy il-ḥagar* ≈ he's pigheaded. - *ḥagar daayir wala sabʕ[i] naayim [prov]* (a rolling stone is better than a sleeping lion) ≈ a little thing that does something is better than a big thing that does nothing. - *ʔil-ḥagar id-daayir la budd[a] ʕan laʈʈ-u* ≈ you can't get away with everything all the time. **3** /pl *ḥigaara, ḥugaara*/ **3a** dry battery. **3b** spectacle lens. **3c** *ḥagar wallaaʕa* flint of a lighter. **4** /pl *ʔiḥgira, ḥigíra*/ pottery bowl of a water-pipe (see Pl.I, 2), (loosely also) a pipeful of tobacco. *nifrab ḥagar taani ʠabl[i] ma nimʃi* let's smoke another pipe of tobacco before we go.

حجرة *ḥagara* /unit n, pl *-aat*/ a stone.

حجراية *ḥagaraaya* /n pl *-aat*/ piece of stone.

حجّار *ḥaggaar* /n * and pl *ḥaggaara*/ **1** quarryman. **2** stonemason.

محجر *maḥgar* /n pl *maḥaagir*/ quarry.

محجراتي *maḥgaraati* /n pl *-yya*/ quarry-man.

حجّر *ḥaggar* /vt/ **1** to chock (a wheel) with a stone. *rakant[i] f-ḥitta mdaḥdara w-ḥaggart il-ʕarabiyya* I parked on a slope and put a chock under the car wheel. — /vi/ **2** to become hard (as stone), become petrified. **3** to behave stubbornly. - vn *taḥgiir*; ava/pva *miḥaggar*.

محجّر *miḥaggar* /pva/ ‖ *wazn[i] mḥaggar [mus]* four-four time.

اتحجّر *ʔitḥaggar* /vi/ **1** to be chocked with a stone (of a wheel). **2** to become hard, become petrified. - ava/iva *mitḥaggar*.

ح ج ر [2]

حجر *ḥagar[2] (u): ḥagar ʕala* **1** to confine in quarantine. *ḥagr[i] ʂiḥḥi* quarantine (for humans). *ḥagr[i] zraaʕi* quarantine (for animals and plants). **2** *[leg]* to declare legally incompetent. - vn *ḥagr*; ava *ḥaagir*; pva *maḥguur*.

حجرة *ḥugra↑* /n pl *ḥugar, ḥugraat*/ room. *ḥugrit taftiiʃ* inspection chamber. *ḥugrit xaraayiʈ* map room. *ḥugrit rasm* (1) artist's studio. (2) art room (in a school).

حجر *ḥigr* /n pl *ḥigaar*/ **1** lap. *ʕala ḥigr[i] ʔumm-u* on his mother's lap. **2** (also *ʔil-ḥigreen*) crotch. *ḥigr il-banʈaloon* the crotch of the trousers.

اتحجر *ʔitḥagar: ʔitḥagar ʕala* passive of *ḥagar ʕala*. - iva *mitḥigir*.

انحجر *ʔinḥagar* = *ʔitḥagar*. - iva *minḥigir*.

ح ج ز

حجز *ḥagaz (i)* **1** /vt/ to reserve. *ʕaayiz aḥgiz ʔooḍa* I want to book a room. **2** to detain. *ḥagazuu-ni liṯ-taḥʠiiʠ* they detained me for questioning. **3** to bar, block. — /vi/ **4** to make a barrier, put up a barrier. *ḥagazu been il-ʔaʕḍaaʔ wi-ʁeer il-ʔaʕḍaaʔ* they put up a barrier between the members and the non-members. ‖ *ʔil-ḥigaab il-ḥaagiz [anat]* diaphragm. - vn *ḥagz*; ava *ḥaagiz*; pva *maḥguuz*.

¶ *ḥagaz ʕala [leg]* to attach, issue a writ of attachment for. *ʔil-muḥḍar ḥagaz ʕala dukkaan-i* the writ server attached my shop.

حاجز *ḥaagiz* /n pl *ḥawaagiz*/ **1** barrier. ‖ *ḥaagiz iṣ-ṣoot* the sound barrier. - *ḥaagiz moog* breakwater. **2** *[athl]* hurdle.

حاجزة *ḥagza* /n pl *-aat*/ partition.

حجاز *ḥugaaz* /n/ *[mus]* mode in Arabic music beginning on D and having E flat, B flat, and F sharp.

الحجاز *ʔil-ḥigaaz* /prop n/ the Hijaz.

حجازى *ḥigaazi* /adj/ of or pertaining to the Hijaz. ‖ *barsiim ḥigaazi* common medick (Medica gestiva), a variety of *barsiim*, superior for its year-round growth and retention of value as fodder when dried.

اتحجز *ʔitḥagaz* /vi/ passive of *ḥagaz*. - iva *mitḥigiz*.

حجّز *ḥaggiz* /vi/ to act as a barrier. *waaḥid faayit ḥabb[i] yḥaggiz wi-yxallaṣ-hum min baʕḍ* someone who was passing wanted to interpose himself and break up the fight. - vn *taḥgiiz*; ava *miḥaggiz*.

ح ج ز ك -
حجازكار *ħugazkaar* <T *hicazkâr*> /n/ *[mus]* compound mode beginning on C and having D flat and A flat. *hugazkaar kurd* compound mode beginning on C and having D flat, E flat, A flat, and B flat.

ح ج ل
حجل *ħagal (i)* /vi/ to hop on one foot. *ʕir-rigl illi tiħgil ɛaleeha ʕawwil il-liɛba laazim titann-ak tiħgil ɛaleeha l-ʕaaxir il-liɛba* the foot on which you hop at the beginning of the game you must continue hopping on till the end. ‖*ħagalt*^{i} *fiiha (ya ɣraab il-been)* ≈ the situation has got very bad thanks to your interference (said to one considered to be a bearer of misfortune). - vn *ħagl, ħagalaan*; ava *ħaagil*.
حجلة *ħagla* /inst n, pl *-aat*/ a hop. *liɛbit il-ħagla* hopscotch.
حجّالة *ħaggaala* /n/ bedouin dance in which a woman symbolically chooses a husband from a circle of men.

^{1}ح ج م
حجم *ħagam (i)* /vt/ to cup, scarify. - vn *ħagm, ħagamaan*; ava *ħaagim*; pva *maħguum*.
حجامة *ħigaama* /n/ cupping, scarification (especially of the head).
حجّام *ħaggaam* /n */ *[obsol]* cupper.
اتحجم *ʕitħagam* /vi/ to be cupped. - iva *mitħigim*.
أحجم *ʕaħgam*↑ /vi/ to hesitate, flinch. *ʕaħgam ɛan if-ʃihaada* he declined to give evidence. - vn *ʕiħgaam*; ava *muħgim*.

^{2}ح ج م
حجم *ħagm* /n pl *ʕaħgaam, ħigíma, ħuguum*↓/ size, volume. *baaku ħagm*^{i} *kbiir* a large-sized packet. *ħagm il-ʕooḍa* the size of the room. *ħagm il-istismaraat* the volume of investment.

ح ج ن
حجنة *ħagna* /n/ common reed (Phragmites communis).

ح خ ا م
حاخام *ħaxaam* <Heb> /n pl *-aat*/ chief rabbi.
حاخامخانة *ħaxamxaana* /n pl *-aat*/ chief rabbi's residence and administrative centre.

ح د see و ح د: *ħida*^{2}

ح د ا see ح ز ى: *ħada*^{3}, *ħida*^{1}

ح د ء see ^{2}ح د ى: *ħiddaaya*

ح د ا ش ر see ء ح د: *ħidaaʃar*

ح د ب
أحدب *ʕaħdab* /adj, fem *ħadba*, pl *ħudb*/ hunchbacked.
حدّب *ħaddib* /vt/ to make convex. *ɛadasa muħaddaba* a convex lens. - vn *taħdiib*; ava/pva *miħaddib*; pva *muħaddab*.
تحديبة *taħdiiba* /pl *-aat, taħadiib*/ instance noun of *taħdiib*.
اتحدّب *ʕitħaddib* /vi/ **1** to become convex. **2** to be made convex. - ava/iva *mitħaddib*.

ح د ت see ح د س: *ħadiit, ħadduuta, ħaddit, ʕitħaddit*

ح د ث see ح د س

ح د ج see ح د ى ج: *ħudeeg*

^{1}ح د د
حدّ *ħadd*^{1} *(i)* /vt/ to sharpen, heighten (the feelings). *ʕeeh illi ħadd-ak ɛal-bint*^{i} *di kida* what has so inflamed your love for that girl? - vn *ħadd, ħadadaan*; ava *ħaadid*; pva *maħduud*.
حدّ *ħadd*^{2} /n pl *ħuduud*/ **1** limit. *ħuduud il-balad* the borders of the country. *ɛala ħuduud il-maħaṭṭa* on the perimeter of the station. *ʕilzam ħadd-ak* (or *ħuduud-ak*) ≈ don't overstep the mark. *di ħkaaya zaadit ɛan ħadd-a-ha* this business has gone too far! *kull*^{i} *feeʔ wi-luu ħuduud* there's a limit to everything. ‖*fi-ħuduud* approximately, as in *ɛaayiz ʕadfaɛ fi-ħuduud xamsa gneeh* I want to pay about five pounds. - *ɛala ħadd*^{i} *taɛbiir-(u)*↑ as (he) put it, as (he) expressed it. - *ɛala ħaddin sawa* it's six of one and half a dozen of the other, it makes no difference. **2** cutting edge. *ħadd is-sikkiina* the blade of the knife. ‖*silaaħ bi-ħaddeen [fig]* a two-edged weapon. **3** *[Isl]* punishment prescribed by Islamic law. ‖*ħadd alla beeni w-beenu* ≈ I'll have nothing to do with him.
¶ *li-ħadd* /prep/ to, till. *baɛat if-fawwaala l-ħadd*^{i} *ɛandi* he sent the maid over to my place. *saabit il-vasiil manfuur li-ħadd il-mavribiyya* she left the washing out till sunset. - *li-ħadd*^{i} *ma* /conj/ until. *ɑaɛadit tiɛayyaṭ li-ħadd*^{i} *ma thadd*^{i} *ħel-ha* she went on crying until she was exhausted. - *ʕila ħaddin ma*↑ to a certain extent.
حدّى *ħaddi* /adj/ pertaining to limit. *manṭiqa ħaddiyya* upper limit of a tax bracket. *ʕil-ɛilaawa zawwidit il-manṭiqa l-ħaddiyya btaɛt-i* the rise put me in a higher tax bracket.

حادّ *ḥadd*[3], *ḥaadd* /adj/ **1** sharp, sharpened. *sikkiina ḥadda* a sharp knife. **2** acute (of illness). **3** *[geom]* acute (of an angle).

محدود *maḥduud* /adj */ limited, bounded. *ʕil-waqt*[i] *maḥduud* time's limited. *muxx-u maḥduud* his outlook is narrow. *firka maḥduuda* a limited company.

أحدّ *ʔaḥadd* /el/ more/most sharp. *ʔil-ɣeen ʔaḥadd*[i] *mif-farfara [prov]* the (evil) eye is sharper than a sickle.

حدّة *ḥidda* /n/ vehemence. *kallim-ni b-ḥidda* he spoke to me vehemently.

جدودة *ḥudúda*↓ = *ḥuduuda*.

حدادة *ḥidaada* /n/ metalwork, blacksmithery.

حدودة *ḥuduuda*↓ /n pl *-aat*/ border of a plot of land. ‖*zaayid ɛan il-ḥuduuda* gone too far.

حديد *ḥadiid* /n/ iron, (loosely also) any metal. *sulufaat ḥadiid* ferro-sulphates. *ḥadiid zahr* cast iron. *ḥadiid ṣulb* steel. *fooka bi-snaan ḥadiid* a fork with metal prongs. ‖*xaduu fil-ḥadiid* (1) they put him in irons. (2) they arrested him. *-ɛaayiʃ fil-ḥadiid win-naar* living under dreadful strain, living in hell. *-baab il-ḥadiid* /prop n/ Cairo's main railway station and the area around it. *-xara ḥadiid*↓ iron filings.

حديدة *ḥadiida* /n/ **1** /inst n, pl *ḥadaayid*/ a piece of iron, a piece of metal. ‖*ɛala l-ḥaḍiida* down to one's last penny, as in *ṣaraf il-ɣirfeen illi maɛaa wi-baɣa ɛal-ḥadiida* he spent all the money he had and went broke. **2** /pl *ḥadaadi*/ metal spike on top of a wall or railing.

حديدى *ḥadiidi* /adj/ **1** of iron, of metal. ‖*ɛaziima ḥadidiyya* a will of iron. *-raagil ḥadiidi* robot. **2** dark grey.

حدّاد *ḥaddaad* /n */ blacksmith, metal worker. ‖*beeni w-beenu ma ṣanaɛ il-ḥaddaad* ≈ we are at daggers drawn.

حدّادى *ḥaddaadi* /adj invar/ pertaining to metal and to metal working. *munʃaar ḥaddaadi* metal-cutting saw. *musmaar ḥaddaadi* large thick crudely-handmade nail.

اتحدّ *ʔitḥadd* /vi/ **1** to be sharpened. **2** to lose one's temper. *-*ava/iva *mitḥadd*.

حدّد *ḥaddid* /vt/ **1** to limit, restrict. *ʔis-sawra ḥaddidit il-milkiyya* the revolution limited property rights. ‖*taḥdiid in-nasl* birth control. **2** to determine, specify. *ḥaddidit il-maḥkama yoom lil-beeɛ* the court fixed a day for the sale. *ɣayz-ak tiḥaddid biɣ-ɣabṭ*[i] *miin illi ɣalṭaan* I want you to determine exactly who is at fault. *tiqdar tiḥaddid sinn ig-gamal bi-snaan-u* you can tell the age of the camel by its teeth. *-*/the literary passive imperfect form occurs/ *ʔis-siɛr*[i] *b-yuḥaddad ḥasab ʃuhrit il-muṭrib* the price is fixed according to the fame of the singer. **3** to delimit. *niḥaddid qiṭɛit il-ʔarḍ*[i] *big-giir* we mark the boundaries of the plot of land with lime. *-*vn *taḥdiid*; ava/pva *miḥaddid*; pva *muḥaddad*.

اتحدّد *ʔitḥaddid* /vi/ passive of *ḥaddid*. *-*iva *mitḥaddid*.

احتدّ *ʔiḥtadd* /vi/ to become heated (in argument etc.). *dayman yiḥtadd*[i] *fil-munaqʃa* he always gets worked up in discussion. *-*vn *ʔiḥtidaad*; ava *miḥtadd*.

مستحدّ *mustaḥadd* /n pl *-aat*/ *[butcher]* knife-sharpening steel.

ح د د[2]

حدّ *ḥadd*[4] /pron/ someone, anyone. *ḥadd*[i] *fiihum ballaɣ ɛanni* one of them informed on me. *ḥadd*[i] *ywallaɛ ḥaaga w-yisha ɛaleeha* would anyone (be so stupid as to) light something and forget all about it? *ma-ḥadd*[i]*-ʃ ɛadd-u-hum* no-one has counted them.

حدّ *ḥadd*[5] /n pl *ḥuduud*/ Sunday. *taɛaala yoom ḥadd* come on a Sunday. *taɛaala l-ḥadd* (or *yoom il-ḥadd*) come (this) Sunday.

ح د د[3] see also ح د ى[2]

حدّ *ḥidd* sound used to chase kites away (e.g., from chickens).

ح د ر

انحدر *ʔinḥadar* /vi/ **1** to fall down, slide down. *ʔinḥadar ɛala ḍahr-u* he fell down on his back. **2** to deteriorate. *ʔinḥidaar il-ʔaxlaaq* moral decline. *-*vn *ʔinḥidaar*; ava *minḥidir*.

ح د رج

حدارجه *ḥadarga: ḥadarga badarga* the opening phrase of a children's counting game.

ح د س

حدث *ḥadas*[1]↑ *(a)* /vi/ to happen. *ḥadas fiɛlan* it actually happened. *-*vn *ḥadas, ḥuduus*; ava *ḥaadis*.

حدث *ḥadas*↑[2] /n/ **1** /pl *ʔaḥdaas*/ event, happening. *ziyart-u kaanit ḥadas kibiir* his visit was a great event. **2** /no pl/ *[Isl]* ritual uncleanness, ritual impurity.

حادث *ḥaadis*↑ /n pl *ḥawaadis*/ event, happening. *ḥaadis saɛiid* a happy event (i.e. a birth).

حادثة *ḥadsa* /n pl *ḥawaadis*/ **1** incident, event. *ḥadsa ɣariifa ḥaṣalit fil-igtimaaɛ* a nice thing occurred during the meeting. **2** accident. *kaan fi-ʔutubiis ɛamal ḥadsa* he was in a bus that was involved in an accident.

حديث، حديت *ḥadiit* /n/ talk, conversation. ‖*kitiir il-ḥadiit wil-kalaam* tongues started wagging.

حديث *ḥadiis* /n/ **1** /coll/ the Tradition(s) of the Prophet Muhammad. — /pl *ʔaḥadiis*/ **2** a Tradition of the Prophet Muhammad. **3**↑ formal talk or address (e.g., on the radio). — /adj */ **4** modern. *ʔiʃ-ʃiɛr il-ḥadiis*

modern poetry. **5** new, recent. *katakiit ḥadiisit il-faqs* newly-hatched chicks. ‖*ḥadiis is-sinn* young.

أحدث ʔaḥdas[1] /el/ more/most modern or recent.

حدّوتة، حدّوتة *ḥadduuta* /n pl *ḥawadiit*/ **1** story for children. **2** piece of gossip, rumour.

محدت *maḥdat* /n pl *maḥadiit*/ *[derog]* conversation, gossip session.

أحداث *ʔaḥdaas* /n/ **1** /coll/ juvenile(s). **2** (also *malgaʔ ʔaḥdaas*) reform school.

حدّث، حدّت *ḥaddit, ḥaddis*↑ **1** /vt/ to talk to. **2** /vi/ to talk, speak. -vn *taḥdiit, taḥdiis*; ava/pva *miḥaddit, miḥaddis*.

محدّتاتي *miḥadditaati* /n pl *-yya*/ *[derog]* one given to longwindedness.

اتحدّث، اتحدّت *ʔitḥaddit, ʔitḥaddis*↑ /vi/ to exchange talk, chat. *xallii-na nitḥaddit wi-nidḥak ʃiwayya* let's chat and laugh a little. -ava *mitḥaddit*.

أحدث *ʔaḥdas*[2] **1** /vt/ to produce, give rise to. *kalaam-u ʔaḥdas zuhuul* his words caused amazement. **2** /vi/ *[Isl]* to become ritually unclean, enter into a state of ritual impurity. -vn *ʔiḥdaas*; ava *muḥdis*.

إحداثيّات *ʔiḥdasiyyaat* /pl n/ *[math]* co-ordinates.

محدث *muḥdis* (also *muḥdis niʒma*) /n */ upstart, parvenu.

ح د ف

حدف *ḥadaf (i)* /vt/ **1a** to throw, toss. *ḥadaf-li k-koora* he threw me the ball. ‖*beet maḥduuf* an out-of-the-way house. **1b** to throw at, pelt. *ḥadafuu biṭ-ṭuub* they pelted him with stones. **2** to discard. *farravt il-maḥfaẓa mi-lli fiiha w-ruḥt*[a] *ḥadif-ha* I emptied the wallet of its contents and threw it away. — /vi/ **3** to veer. *ʔid-diriksiyoon bi-yiḥdif yimiin* the steering-wheel pulls to the right. -vn *ḥadf, ḥadafaan*; ava *ḥaadif*; pva *maḥduuf*.

¶ *ḥadaf fik-kalaam* to speak rashly, as in *damm-ak faayir w-b-tiḥdif fik-kalaam yimiin wi-ʃmaal* you're all excited and you don't know what you're saying.

حدفة *ḥadfa* /inst n, pl *-aat*/ a throw.

حدّاف *ḥaddaaf* /n pl *-aat*/ **1** flywheel. **2** shuttle. **3** *[naut]* lifeline.

حدّافة *ḥaddaafa* /n pl *-aat*/ **1** *[text]* pick. **2** balance-wheel (in a watch or clock). **3** clapper (of a bell). **4** counterweight on a locomotive wheel. **5** rocker arm on an oil-rig pump.

اتحدف *ʔitḥadaf* /vi/ **1** to be thrown. ‖*balwa wi-tḥadafit ʕalee* ≈ what a disaster it is that has befallen him! **2** to be discarded. -iva *mitḥidif*.

انحدف *ʔinḥadaf* = *ʔitḥadaf*. -iva *minḥidif*.

حدّف *ḥaddif* /vt/ **1** to throw (a number of things, or a number of times). **2** to pelt (with a number of missiles). *ʔilli beet-u min ʒizaaz ma-yḥaddif-ʃ in-naas biṭ-ṭuub [prov]* people who live in glass houses shouldn't throw stones. -vn *taḥdiif*; ava/pva *miḥaddif*.

اتحدّف *ʔitḥaddif* /vi/ passive of *ḥaddif*. -iva *mitḥaddif*.

ح د ق[1]

حدق *ḥuduq (a)* /vi/ to become (too) salty. *ʔil-mayya kull-a-ha tbaxxarit wil-ʔakl*[i] *ḥuduq* all the water evaporated so the food became too salty. -vn *ḥuduqiyya*.

حدوقيّة *ḥuduqiyya* /n/ sharpness, piquancy (of taste).

حادق *ḥaadiq* /adj/ **1** salty. *gibna ḥadqa* salty (white) aged cheese. ‖*mayya ḥadqa* solution made from chemical salts. **2** sour, tart, sharp. *burtaqaana ḥadqa* a sour orange.

حوادق *ḥawaadiq* /pl n/ salty foods.

حدق *ḥidiq* /adj */ clever, quick-witted.

أحدق *ʔaḥdaq* /el/ **1a** more/most salty. **1b** more/most sour. **2** more/most clever or quick-witted.

حداقة *ḥadaaqa* /n/ sharp-wittedness. *ʔil-mawḍuuʕ waaḍiḥ ma-bidd*[i]*-huu-ʃ ḥadaaqa* the matter is obvious, it doesn't need any special cleverness.

حدّق *ḥaddaq* **1** /vt/ **1a** to taste in order to test for saltiness. **1b** to add salt to (food). **1c** to make too salty. **2** /vi/ to eat something salty or sharp in taste. -vn *taḥdiiq*; ava/pva *miḥaddaq*.

¶ *ḥaddaq ʕala* (1) to mock, poke fun at. (2) to try to attract, try to pick up, make passes at (a girl).

تحديق *taḥdiiq* /n/ sharp-wittedness. *bit-taʕab wit-tazniiq wit-taḥdiiq itḥaṣṣalt*[a] *ʕala talaata gneeh* with a lot of effort and belt-tightening and scheming I got together three pounds.

اتحادق *ʔitḥaadiq* /vi/ to act smart, play the smart aleck. -ava *mitḥaadiq*.

اخدّق *ʔiḥdaqq* /vi/ **1** to become salty (of food). **2** to mature (of pickles). -ava *miḥdaqq*.

استحدق *ʔistaḥdaq* /vt/ **1a** to select for saltiness. **1b** to consider (too) salty. **2a** to select for quick-wittedness. **2b** to consider (too) quick-witted. — /vi/ **3** to act clever, affect cleverness. -vn *ʔistiḥdaaq*; ava *mistaḥdaq*.

[2] (ح د ق)

حدقة *ḥadaqa* /n pl *-aat*/ pupil (of the eye).

حديقة *ḥadiiqa*↑, *ḥadiiqa*↑ /n pl *ḥadaayiq*/ garden. ‖*ḥadaayiq il-qubba* residential area in north-west Cairo.

[1] ح د و

حدا *ḥada*[1] *(i)* /vt/ to shoe (e.g., a horse). -vn *ḥady*; ava *ḥaadi*; pva *maḥdi*.

حدو *ḥidw* /coll n/ *[rur]* leather sandals with one thong over the instep and another encircling the big toe.
حدوة *ḥidwa* /n pl *-aat, ḥidaw*/ **1** horseshoe. **2** unit noun of *ḥidw*.
اتحدى *ʔitḥada* /vi/ to be shod (e.g., of a horse). - iva *mitḥidi*.

ح د و [2]
حدى *ḥada*[2] *(i)* /vi/ to sing or chant (to a camel caravan). - vn *ḥida*; ava *ḥaadi*.
حادي *ḥaadi*[2] /n pl *ḥudaah*/ one who sings or chants to a camel caravan.

ح د ي [1]
اتحدّى *ʔitḥadda* /vt/ to challenge, defy. *ʔatḥaddaa-k law firibt*[i] *xamsa biira wara baʕḍ* I challenge you to drink five beers in a row. - ava *mitḥaddi*.
تحدّى *taḥaddi* /n pl *-yaat*/ challenge. *taḥaddiyaat il-ʕaṣr* the challenges of contemporary society.

ح د ي [2]
حدّاية *ḥiddaaya* /n pl *ḥadaadi, ḥiddayaat*/ kite (bird). ‖ *ʔil-ḥiddaaya ma-tirmii-ʃ katakiit [prov]* (a kite doesn't throw away chicks) a man doesn't discard what he most values. - *ya mara ya ḥiddaaya* ≈ you old buzzard of a woman! see further under ح د د [3]

ح د ي [3] see ح ا د ي [1]: *ḥaadi*[1]

ح د ي ج
حديج *ḥudeeg: ʔabu ḥdeeg* stork.

ح ذ ا ء see ح ز ي

ح ذ ر see ح ز ر [2]

ح ذ ف see ح د ف

ح ذ ق see ح د ق [1]

ح ذ و see ح د و [1] and ح ز ي

ح ر ب [1]
حرب *ḥarab (i)* /vi/ to strive persistently (usually with evil intent). *ḥarab ʕala l-itneen li-ḥadd*[i] *ma farraʔ benhum* he kept scheming against the two (friends) till he split them up. *ḥarabu ʕala ʔamwaal ʔabuu-hum* they tried all means to get their hands on their father's money. ‖ *bi-yiḥrib fi-ṇafs-u* he's fuming, he's boiling with anger. - vn *ḥarb, ḥarabaan*; ava *ḥaarib*; pva *maḥruub*.
حرب *ḥarb* /fem n, pl *ḥuruub, ḥurubaat*[i]/ war. *ʔil-ḥarb il-ʕalamiyya t-tanya* the Second World War. ‖ *ḥarb abu zeed maʕa diyaab* ≈ a hell of a fight.
حربة *ḥarba* /n pl *-aat, ḥiraab*/ **1** spear, lance. ‖ *raas ḥarba* spearhead (literally and figuratively). **2** *[athl]* javelin.
حربي *ḥarbi* **1** /adj */ pertaining to war, military. *muraasil ḥarbi* war correspondent. *buliiṣ ḥarbi* military police. *kulliyya ḥarbiyya* military academy. **2** /n pl *ḥarbiyyaat*/ that part of a water-pump which consists of a driving-shoe and filter.
حارب *ḥaarib* /vt/ to make war against. *ʔil-ʔatraak gayyiin yiḥarbu mʕaana l-ʔingiliiz* the Turks are coming to fight with us against the English. - vn *miḥarba*; ava *miḥaarib*.
محارب *muḥaarib* /n */ fighter. ‖ *ʔil-muḥaaribiin il-qudamaaʔ* war veterans.
اتحارب *ʔitḥaarib* /vi/ **1** to fight each other. **2** to be fought against. - ava/iva *mitḥaarib*.

ح ر ب [2]
حرّب *ḥarrab* <cf Icelandic> /vt/ *[naut]* **1** to frap. **2** to haul on (a rope etc.), pull (a rope etc.) taut. - vn *taḥriib*; ava/pva *miḥarrab*.
اتحرّب *ʔitḥarrab* /vi/ passive of *ḥarrab*. - iva *mitḥarrab*.

ح ر ب [3]
حربايّة *ḥirbaaya* /n pl *-aat*/ chameleon. ‖ *raagil ḥirbaaya* a-snake-in-the-grass.
محراب *miḥraab* /n pl *maḥariib*/ prayer niche in a mosque, mihrab.

ح ر ت
حرث، حرت *ḥarat (i, u)* /vt/ **1** to plough. *bi-niḥrit il-ʔarḍ*[a] *ḥart*[i] *rfayyaʕ* we plough the ground in close furrows. ‖ *ma-tiḥrit-ʃ*[i] *maʕaa* do not be rude to him. **2** *[constr]* to mix (concrete). - vn *ḥart, ḥarataan, ḥiraat*; ava *ḥaarit*; pva *maḥruut*.
حراتي *ḥiraati* /adj invar/ pertaining to, or cultivated on, ploughed land. ‖ *fuul ḥiraati* green broad beans.
حرّاث، حرّات *ḥarraat* /n * and pl *ḥarraata*/ **1** *[constr]* workman who controls the shovel that is dragged through concrete to mix it. **2** ploughman.
محراث، محرات *miḥraat* /pl *maḥariit*/ **1** /n/ plough (see Pl.D, 8). **2** /adj/ oafish, stupid, thick.
اتحرث، اتحرت *ʔitḥarat* /vi/ **1** to be ploughed. **2** *[constr]* to be mixed (of concrete). - iva *mitḥirit*.
انحرث، انحرت *ʔinḥarat* = *ʔitḥarat*. - iva *minḥirit*.

ح ر ث see ح ر ت

ح ر ج

حرج *ħarag*[1]↓ *(i)* /vt/ to embarrass, put in a fix. -ava *miħrig*.

حرج *ħarag*[2] /n/ embarrassment. *ʕana f-ʏaayit il-ħarag* I feel terribly embarrassed.

اتحرج *ʕitħarag*↓ /vi/ to be embarrassed, be put in a fix. -iva *mitħirig*.

حرّج *ħarrag* /vt/ to make forbidden. *maama ħarragit ʕalayya ʕaṭlaʕ fooq is-suṭuuḥ* mother forbade me to go onto the roof. *ʕid-duktuur miħarrag ʕalayya l-malḥ* the doctor has forbidden me salt. -vn *taħriig*; ava *miħarrag*.

أحرج *ʕaħrag* /vt/ to embarrass, put in an embarrassing situation. *kunt*[a] *ʕaayiz ʕattihm-u ʠuddaamak ʕaʃaan ʕaħrig-u* I wanted to accuse him in your presence in order to embarrass him. -/the literary passive also occurs/ *ʕana ʕuħragt*[i] *minnu* I was embarrassed by him. -vn *ʕiħraag*; ava *muħrig*; pva *muħrag*.

استحرج *ʕistaħrag*↓ /vi/ to have scruples (particularly on religious grounds). *bi-yistaħrag ħatta yaaxud ħaʠʠ-u* he is even reluctant to take what is his right. -vn *ʕistiħraag*; ava *mistaħrag*.

ح ر ج ل

حرجلاتك *ħirgalaatak: ħirgalaatak birgalaatak ħalaʠa dahab fi-wdanaat-ak* chant used in the ceremonies for a newborn child on *yoom is-subuuʕ*.

ح ر ج م

حرجم *ħargim* /vi/ to hover around, hang about (with intent to acquire s.th.). *huwwa miħargim ʕal-filuus* he has his eye on the money. -vn *ħargama*; ava *miħargim*.

اتحرجم *ʕitħargim* /vi/ (impersonal) passive of *ħargim*. *bint*[i] *ħilwa zayy*[i] *di laazim yikuun-mitħargim ʕaleeha* a pretty girl like this must surely be the object of (a lot of people's) ambitions. -iva *mitħargim*.

استحرجم *ʕistiħargim*↓ = *ħargim*. -ava *mistiħargim*.

ح ر د

حرد *ħarad (i)* /vt/ **1** to cut in a curve (in dressmaking). **2** to train in manners, polish (s.o.). -vn *ħard, ħaradaan*; ava *ħaarid*; pva *maħruud*.

حردة *ħarda* /n pl -aat/ **1** /inst n/ a cut along a curve (in dressmaking). **2** woman's head-kerchief.

اتحرد *ʕitħarad* /vi/ **1** to be cut in a curve. **2** to be or become polished (of s.o). -ava/iva *mitħirid*.

انحرد *ʕinħarad* = *ʕitħarad*. -iva *minħirid*.

ح ر ر[1]

حرّر *ħarrar*[1] /vt/ **1** to write up, put in written form. *ħarrar if-ʃiik bi-sm-i* he made out the cheque to me. **2** to edit (a book, newspaper etc.). -vn *taħriir*; ava/pva *miħarrar*.

¶ *ħarrar ʕala* to aim at. *ħarrar il-bunduʠiyya ʕaʃ-ʃagara w-ʠarab* he aimed the rifle at the tree and fired.

تحريرى *taħriiri* /adj invar/ written, in written form. *ʕimtiħanaat taħriri* written exams.

تحريرجى *taħrirgi* /n pl -yya/ *[obsol]* writer, letter-writer.

محرّر *muħarrir* /n */ editor.

اتحرّر *ʕitħarrar*[1] /vi/ **1** to be written up, be put in written form. **2** to be edited (of a book, newspaper etc.). -iva *mitħarrar*.

ح ر ر[2]

حرّ *ħurr* /adj/ **1** /pl *ʕaħraar, ħurriin*/ free, independent. *di balad ħurra* this is a free country. *huwwa ħurr*[i] *yiʕmil illi yiʕgib-u* he's free to do as he likes. *ʕinta ħurr* suit yourself (but bear the consequences)! *ʕumla ħurra* hard currency. **2** *[pol]* liberal. **3** noble, proud, of integrity. *nafs-u ħurra* or *damm-u ħurr* he's a proud soul, he's a man of integrity. ‖*ʕeen il-ħurr*[i] *mzaan-u [prov]* the eye of the man of integrity is his (unfailing) judge. **4** genuine, authentic. *ʕuʠd*[i] *luuli ħurr* a genuine pearl necklace.

حرّيّة *ħurriyya* /n pl -aat/ freedom. *nuʠʠud feen ʕaʃaan nitkallim bi-ħurriyya* where can we sit and talk freely?

حرّر *ħarrar*[2] /vt/ to liberate. *fii ħadd*[i] *ʏer-na yħarrar bilad-na* is there anyone but us to liberate our country? -vn *taħriir*; ava *miħarrar*; pva *muħarrar*.

تحرير *taħrīr* /n/ liberation. ‖*(midaan) it-taħriir* Liberation Square, the main square in central Cairo. -*mudiriyyit it-taħriir* land reclamation area in the north-west Delta.

اتحرّر *ʕitħarrar*[2] /vi/ to be liberated. -iva *mitħarrar*.

متحرّر *mutaħarrir* /adj */ free-thinking.

ح ر ر[3]

حرّ *ħarr*[1] *(i)* /vt/ **1** to make (s.o.) hot. *ʕibʕid ʃiwayya ħarret-ni* move away a little, you've made me hot. **2** to make angry. *ʕana maħruur minnu* I am angry with him. -vn *ħararaan*; ava *ħaarir*; pva *maħruur*.

حرّ *ħarr*[2] /n/ heat. *fi-ʕizz il-ħarr* at the peak of the heat. -/adjectivally/ *ʕid-dunya ħarr* the weather is hot.

حارّ *ħarr*[3], *ħaar* /adj/ **1** hot (in temperature). ‖*ħaar wi-naar (wi-ʏaḍab il-gabbaar)* curse on one who makes an unfair or dishonest profit ≈ may his wellbeing turn to hellfire! **2** hot (in taste). *filfil ħarr* hot pepper(s). ‖*zeet*

ḥaar linseed oil. **3** fervent, warm, ardent. ‖*ganaaza ḥarra wil-mayyit kalb* ≈ much ado about nothing.

حرّان *ḥarraan* /adj */ hot (of animals and people). *fi-ʔaʁusṭus il-waaḥid yibʔa ḥarraan ṭuul in-nahaar* in August one is hot all day long.

حرارة *ḥaraara* /n/ **1** heat. ‖*waraʔ ḥaraara* asbestos. **2** temperature. *mizaan ḥaraara* thermometer. *ʔandu ḥaraara* he has a (high) temperature. **3** fervour, warmth, ardour. *sallim ʔalayya b-ḥaraara* he greeted me warmly. ‖*ma-ʔanduu-ʃ ḥaraara* he has no go, he's a wet blanket. **4** rash. *ʔil-ḥaraara lli f-wiʃʃ-u natarit ʔala gism-u kull-u* the rash on his face spread to his whole body. **5** electric current (only with respect to the telephone system). *ma-ʔdirt[i]-ʃ ʔaṭṭiṣil biik - ma-kan-ʃ[i] fii ḥaraara* I couldn't phone you - the line was dead.

حرارى *ḥaraari, ḥaraari* /adj/ thermal, thermo-. - *ʔit-tasbiit il-ḥaraari* thermo-setting. *miʔalga ḥarariyya* heat treatment. ‖*suʔr[a] ḥaraari* calorie.

اتحرّ *ʔitḥarr* /vi/ **1** to be made hot (of people). **2** to be made angry. - iva *mitḥarr*.

انحرّ *ʔinḥarr* /vi/ **1** to lose one's temper. *ʔana b-anḥarr[i] min il-kalaam il-faariʁ da* I get angry with this nonsense. **2** to be made to feel hot. - ava/iva *minḥarr*.

احترّ *ʔiḥtarr* /vi/ **1** to feel hot. **2** to get angry. *ya ʃarr iḥtarr* anger took control, as in *ʔaʔadu yitʔatbu w-ya ʃarr iḥtarr[i] ḍarabu baʔḍ* they went on arguing until tempers were lost and they hit one another. - ava *miḥtarr*.

ح ر ر[4]

حرير *ḥariir* /n pl *ḥaraayir*/ silk, (loosely also) any silky material. *ḥariir farʃ* furnishing fabric with a silk-like finish.

حريرى *ḥariiri* /adj/ silky.

حرايرى *ḥarayri* /n pl *-yya*/ **1** silk merchant. **2** silk maker. — /adj/ **3** silky, silken. *ʔumaaʃ ʔala ḥarayri* a silky type of cloth.

حرّر *ḥarrar[3]* /vt/ *[text]* to give a silk-like finish to. - vn *taḥriir*; ava/pva *miḥarrar*.

ح ر ر[5]

حرّ *ḥarr* sound made to urge a donkey ≈ gee-up! - also *ḥaa, ḥaa*.

ح ر ز

حرز *ḥirz* /n pl *ʔaḥraaz*/ **1** sealed depository for items of evidence in a criminal case. **2** amulet.

حرّز *ḥarraz* /vt/ to put (an item of evidence) into a sealed depository. - vn *taḥriiz*; ava/pva *miḥarraz*.

اتحرّز *ʔitḥarraz* /vi/ to be put into a sealed depository (of criminal evidence). - iva *mitḥarraz*.

أحرز *ʔaḥraz* /vt/ to be in or come into possession of (especially s.th. illegal). *ʔiḥraaz silaaḥ [leg]* illegal possession of arms. - vn *ʔiḥraaz*; ava *muḥriz*.

ح ر س

حرس *ḥaras[1], ḥaras (u, i)* /vt/ to guard, protect. *ʔik-kalb[i] b-yuḥrus il-firaax min il-ʔirsa* the dog protects the chickens from weasels. *rabb-i-na yuḥrus-u [women]* God bless him! ‖*(ʔism) in-nabi ḥars-u [women in trad soc]* may the Prophet's name protect him! (used with or instead of a child's name to ward off the evil eye). - vn *ḥiraasa*; ava *ḥaaris, ḥaaris*; pva *maḥruus*.

حارس *ḥaaris* /n pl *ḥurraas*/ guard, watchman.

محروس *maḥruus* /adj */ guarded, protected (especially from evil). *ʔaruusa ḥilwa mil-ʔeen maḥruusa* a lovely bride safeguarded from the evil eye. *maḥruus (wi-munṣaan) [women in trad soc]* guarded and safe (from the evil eye)! (used with or instead of the name of a child). ‖*ʔizzayy il-maḥruus* how's your little son (may God protect him)?

حرس *ḥaras[2]* /n/ escort, guard. *ḥaras ʃaraf* guard of honour. *ʔil-ḥaras il-gumhuuri* the Presidential Guard.

اتحرس *ʔitḥaras* /vi/ to be guarded or protected. - iva *mitḥiris*.

حرّس *ḥarras* **1** /vi/ to be on one's guard. *laazim niḥarras minnu* we must beware of him. **2** /vt/ to set (s.o.) as a guard. *ḥarrasuu ʔala l-maxzan* they made him a guard over the warehouse. - vn *taḥriis*; ava/pva *miḥarras*.

اتحرّس *ʔitḥarras* /vi/ to be set as a guard. - iva/pva *mitḥarras*.

¶ *ʔitḥarras ʔala* to keep under guard. *ʔil-buliiṣ itḥarras ʔalee* the police put him under guard.

احترس *ʔiḥtaras* /vi/ to be on one's guard. *ʔiḥtiris min it-taʔabiin* watch out for snakes! - vn *ʔiḥtiraas*; ava *miḥtiris*.

ح ر ش

حرش *ḥirʃ* /coll n/ melon(s) which never reach ripeness on the plant.

حرشة *ḥirʃa* /pl *-aat*/ unit noun of *ḥirʃ*.

حرشاية *ḥirʃaaya* = *ḥirʃa*.

حرش *ḥiriʃ* /adj/ **1** rough, coarse. *ramla ḥirʃa* coarse sand. **2** savoury and appetizing (of food).

حرّش *ḥarraʃ* **1** /vi/ to eat savoury food as an appetizer. **2** /vt/ to make rough or coarse. - vn *taḥriiʃ*; ava *miḥarraʃ*.

اتحرّش *ʔitḥarraʃ* /vi/ to act provocatively, pick a quarrel. - vn *taḥarruʃ*; ava *mitḥarraʃ*.

ح ر ش ف
حرشف *ḥarʃaf* /vt/ to cause to feel rough. *ʕakl il-xarʃuuf bi-yḥarʃif il-buqq* eating artichokes makes one's mouth feel rough. - ava/pva *miḥarʃif*.
حراشيف *ḥaraʃiif* /pl n/ scales (of, e.g., a fish, a crocodile).

ح ر ص
حرص *ḥaraṣ (i, u)* /vi/ to be on one's guard, take care. - vn *ḥirṣ*; ava *ḥaariṣ*.
حرص *ḥirṣ↑* /n/ 1 care, solicitude. 2 meanness.
حريص *ḥariiṣ* /adj */ careful, solicitous. *laazim il-waaḥid yikuun ḥariiṣ ʕala siqat il-ʕamiil* one must be careful to retain the client's trust.
أحرص *ʔaḥraṣ* /el/ more/most careful or solicitous.
حرّص *ḥarraṣ* /vi/ to take care, be careful. *ḥarraṣ ʕala l-filuus laḥsan titnifil* watch out for your money or it will be pinched. *ḥarraṣ min ṣaḥb-ak wala txawwin-uu-ʃ [prov]* don't be too trusting with your friend or you will find yourself questioning his honesty. - vn *taḥriiṣ*; ava/pva *miḥarraṣ*.
اتحرّص *ʔitḥarraṣ = ḥarraṣ*. - ava *mitḥarraṣ*.
استحرص *ʔistaḥraṣ* /vi/ to be on one's guard, take care. *ʔistaḥraṣ ʕal-filuus* look after the money. *ʔistaḥraṣ mil-kilaab* beware of the dogs. - vn *ʔistiḥraaṣ*; ava *mistaḥraṣ*.

ح ر ض
حرّض *ḥarraḍ* /vt/ to provoke, incite. *ʕanaaṣir min barra g-gamʕa ḥarraḍu ṭ-ṭalaba ʕal-muẓaharaat* elements from outside the university put the students up to the demonstrations. - vn *taḥriiḍ*; ava *miḥarraḍ*.
اتحرّض *ʔitḥarraḍ* /vi/ to be provoked, be incited. - iva *mitḥarraḍ*.

ح ر ف [1]
حرف *ḥarf[1]* /n pl *ḥuruuf, ʔuḥruf*/ 1 letter (of the alphabet). *min ḥarf il-ʔalif ʔila ḥarf il-yaaʔ* ≈ from A to Z. *zawya ḥarf[i] tih* T-square. ‖ *wala ḥarf* don't say a word! 2 musical note. *ʔil-maqaam da b-yibtidi b-ḥarf[i] dooh* this scale begins with doh.
حرفي *ḥarfi* /adj */ 1 literal. *targama ḥarfiyya* literal translation. 2 literal-minded, pedantic, pernickety.
¶ *ḥarfiyyan* /adv/ literally.
حرفيّة *ḥarfiyya* /n/ literalness. *ḥarfiyyit il-qanuun* the letter of the law.

ح ر ف [2]
حرف *ḥarf[2]* /n pl *ḥuruuf, ʔuḥruf*/ edge. *ḥarf il-maktab* the edge of the desk.

انحرف *ʔinḥaraf* /vi/ 1 to become corrupt, become deviant. 2 to become defective. *mazaag-u munḥarif* he's out of sorts, he's not himself. - vn *ʔinḥiraaf*; ava *munḥarif*.
انحراف *ʔinḥiraaf* /n pl *-aat*/ 1 deviation. 2 deflection.
حرّف *ḥarraf* /vt/ 1 to change the meaning of. *ma-tḥarraf-ʃ il-kalaam* don't twist what has been said. 2 to place on the edge (e.g., of a table). *ʔil-fingaan miḥarraf* the cup is right at the edge (of the table). - vn *taḥriif*; ava/pva *miḥarraf*.
اتحرّف *ʔitḥarraf* /vi/ 1 to be changed in meaning. 2 to be placed at the edge (of, e.g., a table). - iva *mitḥarraf*.

ح ر ف [3]
حرفة *ḥirfa* /n pl *ḥiraf*/ trade, (skilled) craft. *ʔibn[i] ḥirfa* a (good) craftsman.
حرفي *ḥirafi* /adj * and pl *-yya*/ skilled, expert (at a particular trade).
حرّيف *ḥarriif* /n pl *ḥarriifa*/ expert, master. *da ḥarriif kutʃiina* he's an expert at cards.
احترف *ʔiḥtaraf* 1 /vt/ to practise (a profession). *bi-yiḥtirfu ʕiraayit il-qurʔaan* they practise Koran-reading as a profession. 2 /vi/ to become a professional. *kaan haawi w-baʕdeen iḥtaraf* he was an amateur and then turned professional. - vn *ʔiḥtiraaf*; ava *muḥtarif*.
محترف *muḥtarif* /n */ professional.

ح ر ف [4]
حرافة *ḥaraafa* /n/ pungency, piquancy (of taste).
حرّيف *ḥirriif* /adj/ spicy, piquant, pungent.

ح ر ف ن
حرفنة *ḥarfana* /n/ skill, expertise. *di s-siwaaʕa ḥarfana* driving is a matter of skill.
احترفن *ʔitḥarfan* /vi/ to act the professional, act the expert. - ava *mitḥarfan*.

ح ر ق
حرق *ḥaraʕ (a)* /vt/ 1 to burn. *bi-nigmaʕ il-waraʕ wi-niḥraʕ-u f-goora barra* we collect the leaves and burn them in a pit outside. ‖ *bi-yiḥraʕ id-damm* it is infuriating, it makes one's blood boil. - *ya rabb[i] ma-tiḥraʕ-ʃ[i] ʕalb-i ʕalee [women]* ≈ O Lord, don't make me suffer by his death (expressing concern for one in danger). - *ḥaraʕ-lu l-ʔaxḍareen [ábus]* he insulted him vilely. 2 to fire (ceramics). *b-yiḥraʕ iṭ-ṭawaagin fi-furn[i] maxṣuuṣ* he fires the casseroles in a special oven. 3 to cause a stinging sensation to (s.o.) or in (s.th.). *ʔil-marham da b-yiḥraʕ il-ʕeneen* that ointment makes the eyes sting. 4 to frustrate (e.g., a plan).

ħaraq-li n-nukta he spoiled my joke (by giving away the punch line). *ħaraq iz-zahr* he had a good throw of the dice and wasted it (in backgammon). — /vi/ **5** to burn. ‖*qanaabil ħarqa* incendiary bombs. **6** to smart, sting, cause a burning sensation. *ʕeen-i b-tiħraq* my eye smarts. - vn *ħarq, ħariiq, ħaraqaan*; ava *ħaariq*; pva *maħruuq*.

حرق *ħarq* /n pl *ħuruuq/ [path]* burn.

حريق *ħariiq*↑ /n pl *ħaraayiq/* conflagration, fire. *ṭaffaayit ħariiq* fire-extinguisher. *wabuur ħariiq* fire-engine. *ħanafiyyit ħariiq* fire-hydrant.

جريقة *ħariiqa* /n pl *ħaraayiq/* conflagration, fire.

حرقان *ħaraqaan* /n/ burning sensation. *ħaraqaan il-qalb* (1) heartburn. (2) misery. *ħaraqaan il-bool [path]* burning sensation in the urinary tract.

حرقة *ħurqa* /n/ intense mental or emotional pain. *bi-tʕayyaṭ bi-ħurqa* she's crying bitterly.

حرّاق *ħarraaq* /adj/ hot, peppery, pungent (of food). *filfil ħarraaq* hot pepper(s). ‖*ʔil-ħubbᵃ ħarraaq* love makes the heart suffer. - *taman ħarraaq* an exorbitant price.

حرّيقة *ħurreeqa* /n pl *ħarariiq/* blister.

اتحرق *ʔitħaraq* /vi/ **1** to be burnt. *kuntⁱ sayba l-laħma fil-butagaaz lamma tħaraqit wi-baqit faħm* I had left the meat in the oven till it burnt to charcoal. *ʔik-kumm itħaraq minni* I burnt the sleeve by mistake. ‖*ʔaʕṣaab-i tħaraqit* my nerves are frazzled. **2** to be fired (of ceramics). **3** to be frustrated, misfire (of, e.g., a plan). ‖*ʔil-xabar itħaraq* the news leaked out (before its official release). - iva *mitħiriq*.

انحرق *ʔinħaraq* = *ʔitħaraq*. - iva *minħiriq*.

التحاريق *ʔit-taħariiq* /n/ (hot season of) the Nile's lowest water level.

حرّق *ħarraq* **1** /vt/ to burn (s.th.) several times or in several places. **2** /vi/ to burn with passion or lust, suffer intense emotional pain. - vn *taħriiq*; ava/pva *miħarraq*.

اتحرّق *ʔitħarraq* /vi/ **1** to be burnt several times or in several places. **2** to suffer intense emotional pain. - ava/iva *mitħarraq*.

ح ر ك

حرك *ħirik* /adj */ dynamic, on-the-ball, quick-witted. *kaan nifs-i ʔabqa zayy-u milaħlaħ wi-mdardaħ wi-ħirik w-aʕallaq ʔayyuha waħda* I wanted to become like him, glib, outgoing, quick-witted and able to hook any girl.

حركة *ħaraka* /n pl *-aat, -aat/* **1** movement, motion, activity. *ʕamalit-li ħaraka b-ʕeen-ha w-fihimtⁱ qaṣd-a-ha ʔeeh* she winked at me and I understood what she wanted to get across. *waqt il-muulid id-dakakiin tibqa fiiha ħaraka* during the *muulid* the shops are busy. *ħarakaat ʔarḍiyya [gym]* floor exercises. *min il-ħaraka [athl]* from a running start. ‖*qism il-ħaraka* (1) transport section (of a company etc.). (2) *[communic]* operation control section. **2** movement, fluctuation. *ħarakit il-beeʕ* the fluctuation in sales. *ħarakit il-ħisaab* (record of) fluctuation in a bank account. **3** movement (as a social, political or artistic phenomenon). *ʔil-ħaraka l-waṭaniyya* the nationalist movement. **4** trick, deception. *ʕamal fiyya ħaraka xallaa-ni trafadt* he played a dirty trick on me and got me fired. **5** *[mus]* movement. **6** group or annual promotions, appointments etc. for the civil service, diplomatic corps and other official bodies.

حركى *ħaraki* /adj */ pertaining to a *ħaraka*. ‖*ʔismⁱ ħaraki* code-name, nom de guerre.

حرّك *ħarrak* /vt/ **1** to move. *miʃ qaadir ʔaħarrak diraaʕ-i* I can't move my arm. *qiwwit id-dafʕ illi bi-tħarrak il-bistim* the driving force that moves the piston. ‖*ħarrak il-mumassiliin [theat]* to block a play. **2** to arouse, stimulate, move (emotionally). **3** to stir, agitate. *ħarrak if-faay* stir the tea! - vn *taħriik*; ava/pva *miħarrak*.

تحريكة *taħriika* /inst n, pl *-aat/* a movement.

محرّك *muħarrik* /n pl *-aat/* **1** motor. *muħarrikaat id-diizil* diesel engines. **2** propeller.

اتحرّك *ʔitħarrak* /vi/ **1** to move. *ma-titħarrak-fⁱ min hina l-ɣaayit m-argaʕ* don't move from here till I get back! **2** to be moved. *ʔil-kursi tħarrak min makaan-u* the chair has been moved from its place. - vn *taħarruk*; ava/iva *mitħarrak*.

تحرّك *taħarruk* /n pl *-aat/ [mil]* (troop) movement.

متحرّك *mutaħarrik*↑ /adj/ moveable, mobile. *sillim mutaħarrik* escalator. ‖*kursi mutaħarrik* wheelchair.

ح ر ك ر ك

حركرك *ħurukruk: ʕala l-ħurukruk* barely, only just, as in *nigiħtⁱ bassᵃ ʕala l-ħurukruk* I passed, but only by the skin of my teeth.

ح ر ك ش

حركش *ħarkiʃ* /vt/ to agitate, excite, thrill, stir. - vn *ħarkaʃa*; ava/pva *miħarkiʃ*.

اتحركش *ʔitħarkiʃ* /vi/ to be agitated, be excited, be thrilled, be stirred. - iva *mitħarkiʃ*.

ح ر م

حرم *ħurum (a)* /vi/ to be forbidden. *ʔin kaan il-beet ʕaayiz zeet yiħram ʕala g-gaamiʕ [prov]* ≈ charity be-

gins at home. *ḥurmit ɛaleek ɛift-ak [abus]* may you be deprived of your life! (abusive reply to *ḥaraam* or *ḥaraam ɛaleek*). - ava *ḥarmaan*.

حرم *ḥaram[1] (i)* /vt/ **1** to deprive. *ma-txalaq-ʃ illi yiḥrim-ni minku* the person who could take me away from you has yet to be born. **2** *[Chr]* to excommunicate. - vn *ḥirmaan*; ava *ḥaarim*; pva *maḥruum*.

حرم *ḥarm* /n/ *[Chr]* excommunication.

حرمة *ḥurma* /n/ **1** /pl *-aat*/ *[trad soc, abus]* woman. **2** /no pl/ sanctity, inviolability. *ʃil-buyuut laha ḥurma* ≈ every man's home is his castle.

حرم *ḥaram[2]* /n/ **1** /fem and masc/ wife. *ḥaram-i l-munṣaana* (or *l-maṣuun*) ≈ my respected wife. **2** *[Isl]* sacred enclave (as at Mecca and Jerusalem). *ʃil-ḥaram if-fariif* the sacred enclave at Mecca.

¶ *ḥaraman [Isl]* a greeting to one who has just finished his prayers (i.e. may we pray some day in *ʃil-ḥaram if-fariif*). - *ʃil-ḥarameen* the cities of Mecca and Medina.

حرملك *ḥaramlik* /n/ *[obsol]* women's quarters in a traditional upper-class house.

حرام *ḥaraam* **1** /n/ forbidden thing (especially in Islam). *ʃaṣuum w-aṣalli w-m-akul-ʃ[i] bil-ḥaraam ʃabadan* I fast and pray and never accept tainted money. *huwwa ḥaraam lamma ʃastarayyaḥ ʃiwayya* is it a crime if I take a little rest? ‖ *da ḥaraam - ʃana kunt[i] naayim* it's too bad, I was asleep! - *ʃibn[a] ḥaraam* bastard. **2** /adj invar/ illegal, illicit. *ʃil-maal il-ḥaraam* ill-gotten gains. ‖ *xilfa ḥaraam* ≈ little bastards. **3** modal of reproach. *ḥaraam (ɛaleeku) tinsuu-ni bil-marra* what a shame for you to forget me completely! ‖ *ḥaraam ɛaleek* shame on you! have a heart!

حرام *ḥiraam* /n pl *ḥiríma*/ coarsely woven woollen blanket, rug or wrap.

حرامى *ḥaraami* /n pl *-yya*/ thief. ‖ *ɛaskar* (or *ɛasaakir) wi-ḥaramiyya* cops and robbers (children's game). - *ḥaraami l-ḥalla* large black ant.

حريم *ḥariim* /n/ **1** women's quarters (in a traditional house). **2** /coll/ women. *ɛumr-u ma-ʃaaf ḥariim* (1) he has never had anything to do with women. (2) he is sexually frustrated.

حريمى *ḥariimi* /adj invar/ pertaining to women. *manadiil ḥariimi* ladies' kerchiefs.

انحرم *ʃitḥaram* /vi/ **1** to be deprived. *ʃilaah-i m-atḥirim minha* O God, may I never lose her! **2** *[Chr]* to be excommunicated. - iva *mitḥirim*.

انحرم *ʃinḥaram* = *ʃitḥaram*. - iva *minḥirim*.

حرّم *ḥarram* /vt/ **1a** *[Isl]* to declare to be *ḥaraam* (q.v.). *bi-yḥarramu n-nibiit* they consider wine *ḥaraam*. **1b** to forbid, prohibit. *baaba mḥarram ik-kutʃiina fil-beet* Daddy has forbidden card-playing in the house. **2** to dissuade (s.o. from doing s.th. shameful). *laazim ʃaḥarram-u yisraq taani* I must get him to stop stealing. — /preverb/ **3** to heed the (bad) results (of doing s.th.), be warned off (doing s.th.). *ʃinta ma-ḥarramt[i]-ʃ tiɛaakis il-bint[i] di* haven't you learnt your lesson and stopped teasing that girl? *ɛamalt[i] kida ɛaʃaan tiḥarram tibuus il-xaddaama* I did that so that you stay away from kissing the maid. ‖ *lissa ma-ḥarramt[i]-ʃ* haven't you wised up yet? haven't you learnt your lesson yet? - vn *taḥriim*; ava/pva *miḥarram*.

محرّم *muḥarram* /n/ Muharram, first month of the Muslim year.

اتحرّم *ʃitḥarram* /vi/ **1** *[Isl]* to be declared *ḥaraam* (q.v.). **2** to be forbidden, be prohibited. ‖ *ʃilli f-ʃiid-u mitḥarram ɛalee* he's so miserly he can't enjoy his wealth. **3** to be dissuaded (from doing s.th. shameful). - iva *mitḥarram*.

أحرم *ʃaḥram* /vi/ *[Isl]* to put on the dress of a pilgrim to Mecca. - vn *ʃiḥraam*; ava *muḥrim*.

إحرام *ʃiḥraam* /n/ *[Isl]* **1** state of ritual preparedness of a pilgrim in Mecca. **2** garments worn while on pilgrimage to Mecca.

احترم *ʃiḥtaram* /vt/ to respect. *ʃiḥtirim nafs-ak* have some self-respect (i.e. behave yourself)! - vn *ʃiḥtiraam*; ava *miḥtirim*; pva *muḥtaram*.

احترام *ʃiḥtiraam* /n/ respect. *laazim tiɛaamil waldit-ak bi-ḥtiraam* you should treat your mother with respect.

احترامات *ʃiḥtiramaat* /pl n/ respectful greetings. *baɛd is-salamaat wil-iḥtiramaat* after giving greetings and paying respects.

محترم *muḥtaram* /adj */ **1** respectable. *raagil muḥtaram ma-yiɛmil-ʃ[i] kida* a respectable man would not do such a thing. ‖ *ya muḥtaram [trad soc]* polite form of address to a man (also used sarcastically and jokingly). **2** good, of good quality or quantity. *haat itneen kiilu laḥma muḥtarama* go and buy two kilos of first-rate meat. *kalt[i] kimmiyya muḥtarama* I ate a good amount.

استحرم *ʃistaḥram* /vt/ to consider forbidden or shameful. - vn *ʃistiḥraam*; ava *mistaḥram*.

(ح ر م ل)

حرمل *ḥarmal* /n/ African rue (Perganum harmal) (the seeds of which are used as incense).

حرملة *ḥarmala* /n pl *-aat*/ loose wrap, shawl.

ح ر ن

حرن *ḥaran, ḥaran, ḥurun, ḥirin (i, a, u)* /vi/ **1** to lose one's temper, become angry. *bi-tiḥran ɛalayya kida leeh* why are you getting annoyed with me? **2** to balk, be

refractory. *ʕil-ħuṣaan ga ɛand il-mayya w-ħaran* the horse got as far as the water and balked. *xayfa ɛalaʃaan ibn-i b-yiħran ɛala* (or *ɛan*) *l-bizz* I'm worried because my child refuses the breast. -vn *ħarna*; ava *ħaarin, ħarnaan*.

حرون *ħaruun* /adj invar/ **1** morose, sulky, petulant. **2** recalcitrant, restive (of a riding animal).

ح ر ن ك ش

حرنكش *ħarankaʃ* /coll n/ Cape gooseberries.

ح ر ى

اتحرّى *ʔitħarra* **1** /vt/ to intend, aim at. *yitħarra l-ʃamaana* he strives to be honest. **2** /vi/ to make an investigation. *laazim nitħarra ɛan il-muʃkila qabl[i] ma nuħkum fiiha* we must investigate the problem before passing judgement. -vn *taħarri*; ava *mitħarri*.

تحرّى *taħarri* /n pl *taħarriyyaat*/ investigation. *bituuɛ il-mabaaħis ɛamalu taħarriyyaat* the detectives made investigations. -/adverbially/ *ʔil-buliis xaduu taħarri* the police took him in for investigation.

ح ز ب

حزب *ħizb* /n pl *ʔaħzaab*/ **1** political party. *niẓaam il-ħizb il-waaħid* one-party system. **2** *[Isl]* **2a** one of the sixty parts of the Koran. **2b** group of prayers known to have been recited by a pious person, and whose subsequent recital is therefore praiseworthy. *ħizb il-baħr* a group of such prayers particularly recited when travelling by sea.

حزبى *ħizbi* /adj/ of or pertaining to a political party.

اتحزّب *ʔitħazzib* /vi/ to take sides, become an adherent. -vn *taħazzub*; ava *mitħazzib*.

متحزّب *mitħazzib* /adj */ partisan, biased.

ح ز ر [1]

حزّورة *ħazzuura* /n pl -*aat*/ riddle, puzzle.

حزّر *ħazzar[1]* /vi/ to guess. *ħazzar fazzar* make a guess! -ava *miħazzar*.

ح ز ر [2]

حذر *ħizir↑ (a)* /vi/ to be vigilant, be on one's guard. *ʔil-ħazar ma-yimnaɛ-ʃ[i] qadar [prov]* no amount of vigilance can forestall fate. -vn *ħazar*; ava *ħaazir*; pva *maħzuur*.

حذّر *ħazzar[2]* /vt/ to warn. -vn *taħziir*; ava *miħazzar*.

اتحذّر *ʔitħazzar* /vi/ to be warned. -iva *mitħazzar*.

حاذر *ħaazir↑* /vi/ to be vigilant, be on one's guard. *ħaazir min ik-kalb[i] da* watch out for that dog! -vn *miħazra*; ava *miħaazir*.

ح ز ز

حزّ *ħazz[1] (i)* /vt/ **1** to score, make an incision in. *ħazz il-ɛaṣaaya ɛaʃaan yiksar-ha* he scored the stick so that he could break it. *ħazz[i] raqabt-u* he slit his throat. **2** to trim. -vn *ħazz, ħazazaan*; ava *ħaaziz*; pva *maħzuuz*.

¶ *ħazz[i] f-nafs-(u)* to hurt (s.o.), offend (s.o.). *ħazz[i] f-nafs-i ʔinnu yiigi l-balad wi-ma-yfut-ʃ[i] ɛalayya* it hurt me that he came to town and didn't drop in to see me. -*ħazz[a] ɛala ... ʔid-diħk* a fit of laughter gripped ..., as in *lamma ftakart in-nukta lli qult[i]-haa-li ħazz[a] ɛalayya d-diħk* when I remembered the joke you told me I was seized by a fit of laughter.

حزّ *ħazz[2]* /n pl *ħuzuuz*/ **1** incision, slit. **2** section of sugar cane.

حزّة *ħazza* /n pl -*aat*/ incision, slit.

حزازة *ħazaaza* /n/ ill-feeling, hostility. *fii ħazaaza benna* there's bad blood between us.

اتحزّ *ʔitħazz* /vi/ to be incised. -iva *mitħazz*.

حزّز *ħazziz* /vt/ to slit, score, make an incision in (s.th.) several times or in several places. -vn *taħziiz*; ava/pva *miħazziz*.

اتحزّز *ʔitħazziz* /vi/ to be slit or scored several times or in several places. -iva *mitħazziz*.

ح ز ق

حزق *ħazaq, ħiziq (a)* /vt/ **1** to corner, put in a tight spot, put pressure on. *ħazaqt-u xadt[i] minnu l-filuus* I cornered him and got the money off him. **2** to take short. *ħazaq-ni d-diħk* I couldn't control my laughter. *ʔiʃ-faxxa ħazaqit-u* he badly needed to go to the lavatory. **3** to tighten. *ħazaq ir-rubaaṭ* he tightened the lace. — /vi/ **4** to bear down, contract the abdominal muscles (e.g., to defecate or give birth). -vn *ħazq, ħazaqaan*; ava *ħaaziq*; pva *maħzuuq*.

حزقة *ħazqa* /pl -*aat*/ instance noun of *ħazq*.

اتحزق *ʔitħazaq* /vi/ passive of *ħazaq*. -iva *mitħazaq*.

حزّق *ħazzaq* /vt/ to tighten very much or in several stages. *ħiduum-u mħazzaqa* his clothes are very tight. -vn *taħziiq*; ava/pva *miħazzaq*.

اتحزّق *ʔitħazzaq* /vi/ to be tightened very much or in several stages. -iva *mitħazzaq*.

ح ز م

حزم *ħazam (i)* /vt/ to bundle, tie in a bundle. -vn *ħazm, ħazamaan*; ava *ħaazim*; pva *maħzuum*.

حزم *ħazm* /n/ firmness, strictness. *ʔil-ħazm[i] miʃ maɛnaa il-qaswa* strictness doesn't mean cruelty.

حزمة *ħizma* /n pl *ħizam, ħizmaat*/ bundle, bunch.

حزام *ħizaam* /n pl *ʔiħzima, ħizíma*/ **1** belt. ‖*ħizaam baladi* silk cummerbund. **2** saddle girth. **3** centre band

of a tennis net. **4** wooden frame of a wrestling floor. **5** decorative rib on the spine of a book.

حزام *ḥuzaam* /n/ *[mus]* mode in Arabic music beginning on E flat having A flat.

حزّم *ḥazzim* /vt/ **1** to tie successively in bundles. **2** to tighten (a belt). **3** to put a scarf or the like on (s.o. preparatory to his or her performing a belly-dance). **4** to wrap a belt round, put a belt on (s.th. or s.o.). ‖*ʕuqdit taḥziim barmiil* barrel belt hitch. - vn *taḥziim*; ava/pva *miḥazzim*.

تحزيمة *taḥziima* /pl *-aat*/ instance noun of *taḥziim*.

اتحزّم *ʔitḥazzim* /vi/ **1** to be tied successively into bundles. **2** to be tightened (of a belt). **3** to tie a scarf around one's hips preparatory to performing a belly-dance. **4** to put on a belt or have a belt put on. - ava/iva *mitḥazzim*.

ح ز ن

حزن *ḥizin (a)* /vi/ **1** to become sad. *ḥizint*[a] *ʕalee lamma ʃuft*[a] *ḥalt-u* I grieved for him when I saw the state he was in. **2** to mourn, go into mourning. - vn *ḥuzn*; ava *ḥaznaan*.

¶ *la ... wala yaḥzanuun* neither ... nor anything at all. *la liqyu ḥaraami wala yaḥzanuun* they didn't find a thief or anything of the sort. *la lu maal wàla yaḥzanuun* he has nothing to his name.

حزن *ḥuzn, ḥizn* /n pl *ʔaḥzaan*/ sorrow, grief. *kutr il-ḥuzn*[i] *yʕallim il-buka [prov]* much grief teaches one to weep. — /no pl/ **2** mourning. *muddit il-ḥuzn* the period of mourning.

حزين *ḥaziin* /adj pl *ḥazaana*/ **1** sad, sorrowful. *ʔalb-i ḥaziin* I'm unhappy. *gat il-ḥaziina tifraḥ ma-laʔit-ʃ*[i] *laha maṭraḥ [prov]* ≈ one who is born to suffer will find no opportunity to rejoice. ‖*ʔig-gumʕa l-ḥaziina [Chr]* Good Friday. **2** in mourning.

حزايني *ḥazayni* /adj invar/ gloomy, doleful. *navama ḥazayni* a sad tune.

محزنة *maḥzana* /n/ **1** mourning, state of mourning. *fi-balad-na l-maḥzana lir-riggaala win-niswaan talatt iyyaam* in our town mourning for both men and women lasts three days. **2** place of mourning.

حزّن *ḥazzin* /vt/ to make sad, grieve. *manẓar-hum yiḥazzin* the sight of them makes one grieve. - vn *taḥziin*; ava/pva *miḥazzin*.

اتحزّن *ʔitḥazzin* /vi/ to be made sad, be grieved. - iva *mitḥazzin*.

ح ز ى

حذاء *ḥiza* **1** /n/ *[mil]* straight ranking. *ʔuqaf fil-ḥiza* line up with the others! **2** /adv/ *[mil]* in line, abreast. *ʔil-ʕasaakir waqfiin ḥiza* the soldiers are standing in line.

حدا، حذا *ḥada*[3], *ḥida*[1] /w pron suff *ḥidaa-* (1st pers sing *ḥadaaya*)/ preposition indicating location (cf Latin *apud*, Fr *chez*, and *ʕand* 1). *ʔil-bitt illi qaʕda ḥdaak* the girl sitting next to you. *ʔitneen min ḥadaana* two of our people. *tilaqii-ha ḥida l-xuḍariyya* you'll find it at the greengrocer's.

حاذى *ḥaaza [mil]* **1** /vt/ **1a** to make (soldiers) stand in line. *ḥaazi l-ʕasaakir di* have these soldiers stand in straight lines. **1b** to stand in line with. *ḥaazi l-ʕaskari lli ganb-ak* line up with the soldier beside you. **2** /vi/ to dress ranks. - vn *ḥiza, miḥaziyya*; ava *miḥaazi*.

اتحاذى *ʔitḥaaza* /vi/ *[mil]* **1** to dress ranks. **2** to be stood in line with. - ava/iva *mitḥaazi*.

ح س ب

حسب *ḥasab*[1] *(i)* /vt/ **1** to calculate, reckon. *bi-yiḥsib it-taḥmiil ʕala l-ʕimdaan* he calculates the load on the pillars. *lamma b-tiigi tiḥsib-lu ḍ-ḍaraayib ...* when you come to reckon his taxes .... **2** to consider, regard. *laazim tiḥsib ḥisaab lin-naas* you must take (other) people into consideration. *ma-b-aḥsib-kum-ʃ*[i] *riggaala* I don't regard you as men. **3** to think, believe, be under the impression that. *ḥasabt-u-kum xaragtu* I thought you'd gone out. *ʔilli ḥasabt-u laqeet-u* I found things to be just as I had expected. - vn *ḥisaab*; ava *ḥaasib*; pva *maḥsuub*.

حساب *ḥisaab* /n/ **1** /vn/ ‖*bi-ḥsaab* carefully, cautiously, as in *b-aakul bi-ḥsaab ʕaʃaan m-atxan-ʃ* I eat cautiously so that I won't get fat. - *min ɣeer ḥisaab* (1) incautiously, recklessly. (2) in great abundance. - *ʕamal ḥisaab* to take into account, consider, as in *ʔiʕmil ḥisaab illi waraak* have some thought for those behind you! *ʔinta ma-b-tiʕmil-ʃ*[i] *ḥsaab li-ḥadd* you don't give a damn about anyone. *raagil yitʕimil-lu ḥsaab* a man to be reckoned with. **2** /pl *-aat*/ account, bill. *ḥisaab gaari* current account. *ʔidaarit il-ḥisabaat il-ʕamma* accounts office. *ʕala ḥsaab-u* at his expense. *ʔiddeet-u ḥsaab-u* I paid him (what was due to him). ‖*ʂarf*[i] *taḥt il-ḥisaab* payment on account. - *kull-u bi-ḥsaab-u* everything has it's price. - *bi-yiftaɣal li-ḥsaab-u* he is self-employed. **3** /no pl/ arithmetic.

حسابي *ḥisaabi* /adj/ **1** of or pertaining to calculating or arithmetic. *ʔalaat ḥisabiyya* calculating machines. ‖*ʕumla* (or *gineeh*) *ḥisaabi* foreign currency transferable only to Egypt and in Egyptian currency (e.g., the Sudanese pound). **2** resting on assumption, supposed, presumed.

حاسب *ħaasib*[1] **1** /adj/ calculating, calculatory. *makana ħasba* calculator. *masṭara ħasba* slide rule. **2** /n pl *-aat*/ calculator, calculating machine. ‖*ħaasib ʕiliktirooni* computer.

محسوب *maħsuub* /n pl *maħasiib*/ protégé. *ʕana maħsuub-ak* I'm yours to command. *ʕil-maħsuub mansuub wi-law kaan maʒyuub [prov]* ≈ you are worth as much as your patronage. ‖*maħsuub-ak* ≈ yours truly, as in *da faqiir xaaliṣ zayy*[i] *maħsuub-ak* he's a very poor man just like me.

محسوبيّة *maħsubiyya* /n/ **1** favouritism. *ʕif-firka kull-a-ha maħsubiyya* the company works entirely on favouritism. **2** /pl *-aat*/ instance of favouritism. *ʕif-firka kull-a-ha maħsubiyyaat* everything in the company is done through influence.

حسبى *ħasbi* /adj/ of or pertaining to accounting. ‖*ʕil-maglis il-ħasbi* office of the judiciary which supervises the financial affairs of wards of the court.

حسبة *ħisba* /n/ calculation. ‖*ʕil-mablaʁ ħisba basiiṭa* the sum is paltry. - *ħisbit birma* complicated problem.

حسبان *ħisbaan* /n/ surmise, expectation. *da ma-kan-ʃ*[i] *f-ħisbaan-i* that's something I hadn't expected at all.

حسب *ħasab*[2] **1** (also *ʒala ħasab*) /prep/ according to. *kull*[i] *waaḥid ħasab rutbit-u* each one according to his rank. *tartiib ʕabgadi ħasab il-muʕallifiin* alphabetical order by author. **2** /n/: *ʕil-ħasab win-nasab* social standing.

¶ *ħasab ma, ʒala ħasab ma* /conj/ as, as in *ʒala ħasab ma tḥibb*[i] *hiyya* as she herself wants, *ʒala ħasab ma z-zibuun ʒaayiz* as the customer wants.

حسب الله *ħasab alla* /prop n/ male given name. ‖*firqit ħasab alla [deris]* brass band of old men and even older instruments such as is often hired to play at peasant weddings etc. - *mazziikit ħasab alla* the music played by such a band.

حسيب *ħasiib* /adj */ of noble birth. ‖*ʕil-ħasiib in-nasiib* epithet of anyone descended from the Prophet Muhammad.

حسّيب *ħassiib* /n pl *ħassiiba*/ one good at calculating. *di lil-mawʒudiin miʃ lil-ħassiiba [prov]* (good fortune is) for those who have it provided by God, not for those who scheme and plan.

احتسب *ʕiṭḥasab* /vi/ **1** to be calculated. *ʕil-ʕagaaza l-ʒarḍa b-tiṭḥisib min il-ʕagaaza s-sanawiyya* compassionate leave is counted a part of one's annual leave. ‖*saaʒa ma-tiṭḥisib-ʃ*[i] *mil-ʒumr* (a time that is not reckoned as part of one's life span) a wonderful time. **2** to be considered. - iva *miṭḥisib*.

انحسب *ʕinḥasab* = *ʕiṭḥasab*. - iva *minḥisib*.

حسّب *ħassib* /vt/ to entrust (s.o.) to the protection (of, e.g., God or a saint). *ħassibt-u bin-nabi* I have entrusted him to the protection of the Prophet Muhammad (said by a mother when putting her child to sleep). - ava/pva *miħassib*.

اتحسّب *ʕiṭḥassib* /vi/ to be entrusted to the protection (of, e.g., God or a saint). - iva *miṭḥassib*.

حاسب *ħaasib*[2] **1** /vt/ to settle an account with. *ʒaayiz ʕaħasb-ak ʒala ħaagit il-beet* I want to settle with you for the shopping. *fi-yoom mil-ʕayyaam ḥ-aħasb-ak ʒala-lli ʒmalt-u* one of these days I'm going to settle up with you for what you did. **2** /vi/ to take care, be careful. *ħaasib* watch it! be careful! *ħaasib ʒalayya* treat me gently! ‖*ħaasib hina ya-sṭa* stop here, driver! - vn *miħasba*; ava *miħaasib*.

محاسبة *muḥasba* /n/ accounting, accountancy.

محاسب *muḥaasib* /n */ accountant. ‖*muḥaasib qanuuni* chartered accountant.

اتحاسب *ʕiṭḥaasib* /vi/ **1** to settle accounts with one another. *ma-ʕafu-hum-ʃ*[i] *w-humma b-yisraqu ʕafuu-hum wi-humma b-yiṭḥasbu [prov]* (they didn't see them stealing but they saw them dividing up the swag) ≈ wrongdoers may not be caught in the act, but the consequences of their action will always betray them. **2** to have an account settled. - ava/iva *miṭḥaasib*.

ح س د

حسد *ħasad*[1] *(i)* /vt/ **1** to envy. *ʕaḥsid-ak ʒalee* I envy you it. **2** to put the evil eye on. *ma-tbuṣṣ*[i]*-lii-ʃ qawi la-tiḥsid-ni* don't look at me so hard or you'll put the evil eye on me. - vn *ħasad, ħasadaan*; ava *ħaasid*; pva *maḥsuud*.

حسد *ħasad*[2] /n/ **1** envy. **2** the evil eye.

حسود *ħasuud* /adj pl *ħussaad*/ **1** envious. *walad xabiis ħasuud bi-yikrah-hum ʒafaan ʕaḥsan minnu* a low, envious boy who hates them because they are better than he. *ʒumr il-ħasuud ma ysuud* the envious never gain ascendancy. **2** having the evil eye. *ʒeen il-ħasuud fiiha ʒuud* may the evil-eyed be struck blind! (a formula against the evil eye).

حسودى *ħasuudi* /adj */ **1** envious. **2** having the evil eye.

حسّاد *ħassaad* /n */ one having the evil eye. *ħaswaaya f-ʒeen il-ħassaada* ≈ may the evil-eyed woman be struck blind! (a formula against the evil eye).

اتحسد *ʕiṭḥasad* /vi/ **1** to be envied. **2** to be made a victim of the evil eye. - iva *miṭḥisid*.

انحسد *ʕinḥasad* = *ʕiṭḥasad*. - iva *minḥisid*.

ح س ر

حسر *ħasar (u)* /vt/ to cause grief to (s.o., usually by loss). *ga l-ħaraami ħasar-ni ɛal-ʔirfeen illi kaanu ɛandi* a thief came and broke my heart by taking (all) the money I had. - vn *ħasaraan*; ava *ħaasir*; pva *maħsuur*.

حسرة *ħasra* /n/ deep grief or regret. *ħa-tmuut bi-ħasrit-ha* she will die of grief. ‖*ya ħasra [women]* a mild exclamation of regret ≈ oh dear! alas! - *ya ħasra ɛala ...* woe betide ...!

اتحسر *ʔitħasar* /vi/ **1** passive of *ħasar*. **2** to feel great grief. - ava/iva *mitħisir*.

انحسر *ʔinħasar = ʔitħasar. ʔin ʃa-lla ma-tinħisrii-ʃ ɛala ħadd[i] min ħabayb-ak [women in trad soc]* may you never suffer the loss of any of your dear ones. - ava/iva *minħisir*.

حسّر *ħassar* /vt/ to make (s.o.) feel sorry or regretful. *ʃaqqit-ha l-ħilwa ħassarit-ni ɛala nafs-i* her nice flat made me feel sorry for myself. - ava/pva *miħassar*.

محسّر *miħassar* /adj */ mean, miserly.

اتحسّر *ʔitħassar* /vi/ to feel sorrowful, feel regretful. *maal baxt-a-ha wi-b-titħassar ɛala nafs-a-ha dilwaqti* her luck turned and now she feels sorry for herself. *baaɛ ɛarabiyyit-u b-ruxṣ it-turaab wi-dilwaqti b-yitħassar ɛaleeha* he sold his car dirt cheap and now he regrets it. - ava *mitħassar*.

ح س س ١

حسّ *ħass[i] (i)* /vi/ **1** to experience a physical sensation. *ħasseet bi-suquɛiyyit il-filuus* I felt the cold touch of the coins. *b-aħiss[i] b-ɋalb-i bi-yduqq[i] gaamid* I feel my heart pounding. **2** to have an emotional feeling or psychological awareness. *ħaasis bil-wiħda* he's feeling lonely. *leeh dayman b-aħiss inni ʔaqall[i] min in-naas* why do I always feel that I'm beneath other people? ‖*ɋalb-i ħaasis* I have a premonition. - *ħiss[a] ɛala damm-ak* (or *ɛala laħm-ak*) ≈ you ought to be ashamed of yourself! **3** to become aware. *lamma rigɛu bet-hum ħassu bil-ħaraami* when they arrived back home they sensed the presence of the thief. *raagil ma-bi-yħiss[i]-ʃ* an insensitive man. - vn *ħasasaan*; ava *ħaasis*; pva *maħsuus*.

حاسّة *ħassa* /n pl *ħawaass*/ sense. *ʔil-ħawaass il-xamsa* the five senses. *ɛandu ħaaga zayy il-ħassa s-sadsa* he has almost a sixth sense. ‖*raaħit ħawass-i* I lost all sensation (an expression of shock). - *ʔana b-axdim-ak bi-kull[i] ħawass-i* I serve you with everything I have.

محسوس *maħsuus* /adj/ concrete, tangible. ‖*kalaam maħsuus* double entendre. - *kallimt-u bil-maħsuus* I gave him indirect hints.

حسّ *ħiss* /n/ **1** voice. *ma-tɛallii-ʃ ħiss-ak* don't raise your voice. **2** sound. *ħiss il-mutoor* the noise of the engine. **3** effective presence (of s.o. or s.th.). *ṭuul ma ħiss-ak fid-dinya* as long as you're alive. *ʔana ṭayyib bi-ħiss-ak* I owe all my well-being to you. ‖*ħiss-ak ...* watch out for ..., as in *ħiss-ak il-baab* mind the door! - *ħiss-ak ɛeen-ak* (or *ħiss-ak biss-ak [joc]*) ≈ just you dare! - *la ħiss[i] wala xabar* ≈ neither sight nor sound, as in *feen-ak ya raagil la ħiss[i] wala xabar* where have you been? there's been no sight or sound of you for ages. - *ɛala ħiss ...* on the strength of one's relationship with ..., as in *ʔana b-atɛaamil fis-suuq ɛala ħiss-ak* I carry on my business by virtue of your good name, *ʔitɣana ɛala ħiss il-maħall* he became rich thanks to the shop.

حسّي *ħissi* /adj */ sensuous. *raagil ħissi* a man who lives to indulge the senses.

حسّيّة *ħissiyya* /n/ sensibility, sensitivity, feeling.

حساسيّة *ħasasiyya* /n pl *-aat*/ **1** sensitivity, feeling. **2** *[path]* allergy.

حسيس *ħasiis* /adj */ sensitive (of people).

حسّاس *ħassaas* /adj/ **1** sensitive. *mizaan ħassaas* fine balance. *bi-yitħifir bi-ʔibra ħassaasa* it is etched out with a sensitive needle. **2** *[phot]* sensitized (of plate or paper).

حسّس *ħassis* /vt/ **1** to cause to feel. *ħassisit-ni ʔinnaha miʃ ɛayza tʃuf-ni* she made me feel that she didn't want to see me. **2** to sensitize. *fuɣlit-u ʔinnu yħassis wi-ygaffif iz-zinka f-nafs il-waqt* its job is to sensitize and dry the plate simultaneously. - /vi/ **3** to give a light touch. *maddeet ʔiid-i ʔaħassis ɛala buuz ig-gazma ʔafuuf-u ṭṭabbaq walla lissa* I stretched out my hand to feel the toe of the shoe and see if it had creased yet. **4** to grope, feel one's way. *kaan il-ɋamar ɣayyib wi-ħassisna l-ɣaayit ma wṣilna* there was no moon so we felt our way along till we got there. - vn *taħsiis*; ava/pva *miħassis*.

اتحسّس *ʔitħassis* /vi/ **1** to be made to feel. *ʔitħassist inni miʃ marɣuub fiyya* I was made to feel that I was not wanted. **2** to be sensitized. **3** (impersonal) passive of *ħassis* 3. *ʔig-gibna di mitħassis ɛaleeha* this cheese has been handled. - iva *mitħassis*.

أحسّ *ʔaħass↑ = ħass*. - vn *ʔiħsaas*.

إحساس *ʔiħsaas* /n/ **1** /pl *-aat*/ feeling, sense. *ɛandu ʔiħsaas bil-luɣa* he has a feeling for language. *fii ʔiħsaas ɛand il-muwaẓẓaf ik-kibiir ʔinn il-ɛarabiyya mukafʔa lii* top officials seem to think that cars are a reward for them personally. **2** /pl *ʔaħasiis*/ sensibility. *ya baxt[i] min iggawwiz waħda tifham ʔiħsaas-u* how lucky is he who is married to a woman who understands his feelings! ‖*ma-ɛanduu-ʃ ʔiħsaas* or *huwwa ɛadiim il-ʔiħsaas* he is insensitive.

ح س س [2]

حثّ *ħass*[2] *(i)* /vt/ to urge. *ʠamiir-i ħass-i-ni ɛala l-iɛtiraaf* my conscience urged me to confess. -vn *ħass*.

حثّ *ħass*[3] /interj/ cry urging a dog to attack. *ħass* or *ħass*[a] *ɛalee* go get him!

ح س م [1]

حسم *ħasam*↑ *(i)* /vt/ to settle (s.th.) decisively. *kilmiteen minnu yiħsimu l-masʕala* a couple of words from him would settle the question once and for all. *qaraar ħaasim* a decisive resolution. -vn ***ħasm***; ava *ħaasim*; pva *maħsuum*.

حسم *ħasm*↑ /n/ resoluteness, resolution. *b-ymaaris masʕuliyyaat-u b-surɛa w-bi-ħasm* he carries out his responsibilities quickly and resolutely.

اتحسم *ʔitħasam* /vi/ to be settled decisively. -iva *mitħisim*.

انحسم *ʔinħasam* = *ʔitħasam*. -ivn *minħisim*.

ح س م [2]

حسوم *ħusuum* /n/ first seven days of the Coptic month of Baramhat, popularly believed to be a bad time for planting.

حسومات *ħusumaat* = *ħusuum*.

ح س ن

حسن *ħusn* /n/ excellence, (good) quality. ***ħusn il-xidma*** the excellence of the service. ‖ *ħusn is-suuq wala ħusn il-biḍaaɛa [prov]* ≈ a good market is more profitable than having good merchandise. *-sitt il-ħusn (wig-gamaal)* (1) fairy-tale princess or heroine. (2) *[bot]* bella-donna. - *ɣaabiɛ il-ħusn* dimple in the chin.

حسن *ħasan*↑ /adj/ good. *ħasan iṣ-ṣuura* good-looking. *ħasan is-seer wis-suluuk* of good conduct and behaviour. *ʔawaayaa ħasana* he has good intentions.

حسنة *ħasana* /n pl *-aat*/ **1** good deed, charitable act, alms. *dool mabsuṭiin wi-ħasanit bet-hum kitiir* they're well-off and give a lot to charity. *ħasana ʠaliila timnaɛ balaawi ktiira [beggars]* a little charity wards off many troubles! *ħasana w-ʕana siid-ak [prov]* ≈ people ask you for charity and yet behave as though they were your master. **2** good aspect, pleasant characteristic. *ʕiz-zawaag ħasanaat-u ʕaktar min sayyiʕaat-u* the good aspects of marriage outnumber the bad. **3** mole, beauty spot.

أحسن *ʕaħsan*[1] **1** /el/ better/best. *ma-ntii-ʃ ʕaħsan minni* you are no better than I. *ʕaħsan film*[i] *fil-balad* the best film in town. *limm*[i] *lsaan-ak ʕaħsan-lak* you'd better curb your tongue! **2** /conj, also ***laħsan***/ **2a** because. *haatu l-ʕutumbiil ʕaħsan il-beeh misaafir* get the car, because the bey is going on a journey. **2b** lest. *ʕiskut ʕaħsan yismaɛ-ak* be quiet or he'll hear you. **3** /adv/ perhaps, maybe (usually indicating worry or fear). *ʕaħsan tikuun fiṭsit taḥt il-ɛarabiyya* she may possibly have been run over by the car! **4** /interj/ ≈ serves you (him, her etc.) right!

¶ *ʕaħsan ma* /conj/ rather than. *ʕasib-hum xaaliṣ ʕaħsan m-aɛiif benhum bi-mazalla* I would rather leave them altogether than live among them in humiliation.

حسونيّة *ħusuniyya* /n/ (good) quality.

الحسين *ʔil-ħuseen* **1** el-Husayn, grandson of the Prophet Muhammad. *gaamiɛ* (or *maʃhad) il-ħuseen* the Mosque of el-Husayn in Cairo, between el-Azhar and Khan el-Khalili. **2** *ʔil-ħuseen* or *ħayy il-ħuseen* district immediately surrounding the mosque of el-Husayn.

حسيني *ħuseeni* /m/ *[mus]* **1** mode in Arabic music beginning on D and having C half flat and E half flat. *ħuseeni ɛaʃiraan* mode in Arabic music beginning on A and having B half flat and E half flat. **2** second pair of strings on a *ɛuud* (the A strings).

الحسينيّة *ʔil-ħiseniyya* /prop n/ the district immediately surrounding the mosque of el-Husayn in Cairo.

حسّن *ħassin* /vt/ to improve, ameliorate. *ʔil-maṣnaɛ da ħassin ʔintaag-u ʠawi* this factory has greatly improved its production. -vn *taħsiin*; ava/pva *miħassin*.

تحسينات *taħsinaat* /pl n/ improvements. *ʔil-maħall*[i] *maɛfuul lit-taħsinaat* the shop is closed for improvements.

اتحسّن *ʔitħassin* /vi/ **1** to improve. *ʔig-gaww*[i] *ma-yitħassin-ʃ*[i] *ktiir ʠabl*[i] *fabraayir* the weather doesn't improve much before February. **2** to be improved. - vn *taħassun*; ava/iva *mitħassin*.

تحسّن *taħassun* /n pl *-aat*/ improvement.

أحسن *ʕaħsan*[2] /vi/ to do well. *ʕaħsant* well done! *ʔittiʠi ʃarra man ʕaħsanta ʔilee [prov]* beware the evil of those to whom you do good! -vn *ʔiħsaan*; ava *miħsin, muħsin*.

¶ *ʕaħsan ɛala* to give alms to.

إحسان *ʔiħsaan* /n/ **1** charity. **2** *[Isl]* highest degree of faith and works that can be achieved by a Sufi.

محسن *muħsin* /n */ charitable person. *beet il-muħsin ɛamaar [prov]* the charitable man's house prospers. ‖ ... *wi-kaan allaah yiħibb il-muħsiniin* ≈ ... and that was the end of that, ... and nothing could be done about it (a rueful comment at the end of a tale of mishaps and misfortunes).

استحسن *ʔistaħsin* /vt/ to select as better or best. *ħ-astaħsin-lak ʕayy*[i] *ʠaṭr*[i] *ywaʃʠ-ak* I'll pick out for you the train that suits you best. -vn *ʔistiħsaan*; ava

mistaḥsin; pva *mustaḥsan*↑.

يستحسن *yustaḥsan* /imperf preverb/ it would be preferable to, it would be better to. *yustaḥsan tiṣḥa badri* it'd be better if you got up early. *yustaḥsan ma-tgii-ʃ hina taani* you'd better not come here again. *min il-mustaḥsan* it is preferable, as in *min il-mustaḥsan (ʕinn) il-ḥagga tilbis ʕabyaḍ* it is preferable for a woman pilgrim to wear white. - vn *ʕistiḥsaan*; ava *mistaḥsin*; pva *mustaḥsan*↑.

ح س و ك

حسوك *ḥaswik* /vi/ to be pernickety, fuss. - vn *ḥaswaka*; ava *miḥaswik*.

ح ش ر [1]

حشر *ḥaʃar (u, i)* /vt/ to force, stuff. *ḥaʃar ʕiid-u fil-xurm[i] ma-ɛrif-ʃ[i] yṭallaɛ-ha* he stuffed his hand into the hole and couldn't pull it out. *daxal ḥaʃr* it fitted in only with difficulty. ‖*bi-yuḥʃur (fil-ʕakl)* he stuffs himself (with food). - *ʕeeʃ ḥaʃar-ak maɛaana* what gives you the right to interfere with us? - vn *ḥaʃr*; ava *ḥaaʃir*; pva *maḥʃuur*.

¶ *ḥaʃar nafs-u* to interfere. *bi-yuḥʃur nafs-u f-kull[a] ḥaaga* he interferes in everything.

حشرى *ḥiʃari* /adj */ interfering, nosey. *ma-tibqaa-ʃ ḥiʃari w-tiddaxxal fi-lli ma-lik-ʃ[i] fii* don't be nosey and interfere in what's none of your business.

اتحشر *ʕitḥaʃar* /vi/ **1** to interfere. *ʕitḥaʃar fil-xinaaqa* he interfered in the fight. *ḥadd[i] yitḥiʃir-li* will someone stand up for me? **2** to be wedged, be stuck, be forced (into s.th.). *ʕil-muftaaḥ itḥaʃar fil-ɋifl* the key got stuck in the lock. - ava/iva *mitḥiʃir*.

انحشر *ʕinḥaʃar* = *ʕitḥaʃar*. - ava/iva *minḥiʃir*.

حشّر *ḥaʃʃar* /vt/ to pack, stuff with. *ḥaʃʃaru z-zakaayib (bi)-ɋuṭn* they stuffed the sacks with cotton. - vn *taḥʃiir*; ava/pva *miḥaʃʃar*.

اتحشّر *ʕitḥaʃʃar* /vi/ to be packed, be stuffed. - iva *mitḥaʃʃar*.

أحشر *ʕaḥʃar*↓ /vt/ *[women]* to cause to interfere. *ʕeeh illi ʕaḥʃar-ak benhum* whatever made you interfere with them?

ح ش ر [2]

حشرة *ḥaʃara* /n pl *-aat*/ **1** insect. **2** insignificant person, nonentity.

حشرى *ḥaʃari* /adj/ insectile, insecti-. *mubidaat ḥaʃariyya* insecticides.

ح ش ر ج

حشرج *ḥaʃrag* /vi/ **1** to become hoarse (of the voice). *ʕil-bard[i] xalla ṣoot-u ḥaʃrag* his cold made his voice hoarse. **2** to gasp for breath (of one suffocating). ‖*ḥaʃragit il-moot* the death rattle. - vn *ḥaʃraga*; ava *miḥaʃrag*.

اتحشرج *ʕitḥaʃrag* = *ḥaʃrag*. - ava *mitḥaʃrag*.

ح ش ش

حش *ḥaʃʃ (i)* **1** /vt/ to cut or mow (grass, clover etc.). *ʕilli yfiiḍ mil-bahaayim niḥiʃʃ-u driis* what's left after the animals have grazed we cut to make into dried fodder. *ʕin kunt[i] f-balad yiɛbidu g-gaḥʃ[i] ḥiʃʃ[i] wi-ddii-lu [prov]* (when in a country where they worship the ass, cut some grass and feed him) ≈ when in Rome do as the Romans do. ‖*ḥaʃʃ wisṭ-u bin-nabbuut* he felled him with his club. - *ʕil-beeɛa di ḥaʃʃit wisṭ-i* (or *ḍahr-i*) this deal left me flat broke. **2** /vi/ to eat large quantities. *ɋaɛad yiḥiʃʃ[i] l-ɤaayit ma xallaṣ il-ʕakl[i] kull-u* he kept on guzzling until he finished all the food. - vn *ḥaʃʃ*; ava *ḥaaʃiʃ*; pva *maḥʃuuʃ*.

حشيش *ḥaʃiiʃ* /coll n/ **1** /pl *ḥaʃaayiʃ*/ grass(es). **2** /no pl/ hashish. ‖*baxx[a] ḥaʃiiʃ* devilish kids.

حشيشة *ḥaʃiiʃa* /n/ **1** = *ḥaʃiiʃ*. — /unit n, pl *-aat*/ **2** a blade of grass. **3a** a piece of hashish. **3b** a variety of hashish.

حشّاش *ḥaʃʃaaʃ* /n */ **1** habitual hashish-smoker. **2** *[joc]* one who is ingenious, artful and humorous in the way of hashish-smokers. ‖*kalaam ḥaʃʃaʃiin* weird ideas.

حشّاشى *ḥaʃʃaaʃi* /adj invar/ **1** of or pertaining to hashish smokers. **2** extraordinarily ingenious and imaginative. *nukat ḥaʃʃaaʃi* amazing jokes.

محشّة *miḥaʃʃa, maḥaʃʃa* /n pl *-aat*/ medium-sized sickle (for cutting grass, clover etc.).

اتحشّ *ʕitḥaʃʃ* /vi/ to be cut (of grass etc.). - iva *mitḥaʃʃ*.

انحشّ *ʕinḥaʃʃ* = *ʕitḥaʃʃ*. - iva *minḥaʃʃ*.

حشّش *ḥaʃʃiʃ* /vi/ **1** to take hashish. **2** to graze on grass. *xud il-ɤanam tiḥaʃʃiʃ ɛag-gisr* take the sheep to graze along the bank. - vn *taḥʃiiʃ*; ava *miḥaʃʃiʃ*.

ح ش ف

حشف *ḥaʃaf* /coll n/ encrustation of seaweed etc. on ships' bottoms, fouling.

محشّف *miḥaʃʃif* /adj/ seaweed-encrusted, fouled.

ح ش م

حشم *ḥaʃam[1] (i)* /vt/ to keep (s.o.) on a short leash, keep (s.o.) under control. *ʕiḥʃim banaat-ak* make your daughters behave respectably! - vn *ḥaʃamaan*; ava *ḥaaʃim*.

حشمة *ḥiʃma* /n/ decency, modesty. *ya banaat sib-ku mil-ḥiʃma - bukra tfiibu* don't be so modest, girls -

tomorrow you'll be old and grey! *ʕil-faqr^{i} ḥifma wil-ɛizz^{i} bahdala [prov]* poverty (induces) reserve; wealth, flamboyance. - /adjectivally/ *raagil ḥifma* a decent man. *sitt^{i} ḥifma* a modest woman.

حشم *ḥaʃam*^{2} /coll n/ entourage. *xadam wi-ḥaʃam* servants and followers-on.

محاشم *maḥaaʃim*↓ /pl n/ genitals.

اتحشّم *ʔitḥaʃʃim* /vi/ to behave modestly. - ava *mitḥaʃʃim*.

ح ش و see ^{1} ح ش ى: *ḥaʃw, ḥaʃwa*

^{1} ح ش ى

حشى *ḥaʃa*^{1} *(i)* /vt/ **1** to stuff. *ḥaʃa l-martaba b-ɢuṭn* he stuffed the mattress with cotton. ‖*kurumb^{i} ya-lli tiḥfi [vendor's cry]* cabbage, you who (want to) make *maḥfi*! - *maa-lak maḥfi hduum* (or *ḥaafi nafs-ak hiduum) kida leeh* why ever are you bundled up in so many clothes? **2** to fill (a tooth). **3** to load (a rifle). - vn *ḥaʃw*; ava *ḥaaʃi*; pva *maḥfi*.

حشو *ḥaʃw* /n/ **1** stuffing, padding. *jakitta ʃitwi b-ḥaʃw* a padded winter jacket. ‖*ʁurzit il-ḥaʃw [needlew]* satin-stitch. - *da fustaan ḥilw^{i} ɢawi.* - *ʔir-rakk^{a} ɢal-ḥaʃw* 'That's a very pretty dress.' 'It's the person inside that makes the clothes!' **2** filling (for teeth). **3** panelling. *ḥaʃw^{i} ḥubaybi* chipboard panelling. ‖*ḥaʃw^{i} baladi* style of intricate panel work employing interlocking geometric designs traditionally fitted without nails or glue, used for doors, mosque pulpits etc. (see Pl.G, 9).

حشوة *ḥaʃwa* /unit n, pl *-aat*/ **1** a filling (for a tooth). **2** a piece of panelling.

محشى *maḥfi* /coll n/ stuffed vegetables. *maḥfi kurumb* stuffed cabbage (leaves).

محشّاية *maḥfiyyaaya* /unit n, pl *-aat*/ a stuffed vegetable or vegetable leaf.

حشا *ḥaʃa*^{2}, *ḥifa* /n, in constr *ḥafaa-* or *ḥafaat-*/ **1** guts, belly. *yinḍirib fi-ḥafaat-u [women]* may he be struck in his guts! **2** offspring. ‖*ya ḥafaa-ya [women]* O my poor child!

أحشاء *ʔaḥʃaaʔ* /pl n/ internal organs of the body.

اتحشى *ʔitḥaʃa* /vi/ **1** to be stuffed. **2** to be filled (of a tooth). **3** to be loaded (of a rifle). - iva *mitḥifi*.

انحشى *ʔinḥaʃa* = *ʔitḥaʃa*. - iva *minḥifi*.

حشّى *ḥaʃʃa* /vt/ to stuff repeatedly or forcefully. *ɢaɢad yiḥaʃʃi fig-garḥ^{i} lamma d-damm^{i} wiɢif* he went on packing the wound till the blood stopped. - vn *taḥfiyya*; ava/pva *miḥaʃʃi*.

^{2} ح ش ى

حاشية *ḥaʃya* /n pl *ḥawaaʃi*/ marginal note, annotation.

حاشا *ḥaaʃa: ḥaaʃa li-llaah* God forbid!

اتحاشى *ʔitḥaaʃa* /vt/ to avoid, shun. *kull-u-hum fil-maṣlaḥa b-yitḥaʃuu-ni* everybody in the agency is avoiding me. - ava/pva *mitḥaaʃi*.

ح ص ا see ^{1} ح ص و: *ḥaṣa*

ح ص ا و

حصاوى *ḥaṣaawi* /adj/: *ḥumaar ḥaṣaawi* hinny. ‖*muxx-u ḥaṣaawi* he's stupid and rash.

ح ص ب

حصبة *ḥaṣba* /n/ measles. *ḥaṣba ʔalmaani* German measles.

حصّب *ḥaṣṣab* /vi/ to come down with measles. *law ibn-ak ḥaṣṣab labbis-u ʔaḥmar* if your son gets measles dress him in red. - vn *taḥṣiib*; ava *miḥaṣṣab*.

اتحصّب *ʔitḥaṣṣab* = *ḥaṣṣab*. - ava *mitḥaṣṣab*.

ح ص د

حصد *ḥaṣad (u)* /vt/ to harvest (wheat, barley, rice and mature clover). *ʔilli tizraɛ bi-ʔiid-ak tuḥṣud bi-ʔiid-ak [prov]* ≈ as you sow, so shall you reap. - vn *ḥaṣd, ḥaṣaad*; ava *ḥaaṣid*; pva *maḥṣuud*.

حصيدة *ḥaṣiida* /n/ *[agric]* **1** cropped land before the stubble has been ploughed in. **2** harvest time (especially for wheat).

حصّادة *ḥaṣṣaada* /n pl *-aat*/ (mechanical) harvester.

اتحصد *ʔitḥaṣad* /vi/ to be harvested. - iva *mitḥiṣid*.

انحصد *ʔinḥaṣad* = *ʔitḥaṣad*. - iva *minḥiṣid*.

ح ص ر

حصر *ḥaṣar (u)* /vt/ **1** to narrow down, restrict, limit. *ʔil-muxbir ḥaṣar if-fubha fil-xaddaama* the detective narrowed suspicion down to the maid. *ʔiḥna ɢayziin nuḥṣur il-xinaaɢa* we want to keep the quarrel within bounds. **2** to determine the extent or quantity of. *ʔil-ḥukuuma ɢayza tuḥṣur ɢadad il-ʔummiyyiin* the government wants to determine the number of illiterates. *ma-l(uu)-f-ḥaṣr* beyond counting, innumerable. ‖*ḥaṣr it-tirka [leg]* taking inventory of a legacy for legal purposes. **3** to take short. *ʔil-mayya ḥaṣarit-u* he badly needed to relieve himself. *fakk^{a} ḥaṣr*↓ to urinate, have a pee. - vn *ḥaṣr*; ava *ḥaaṣir*; pva *maḥṣuur*.

حصرى *ḥuṣari* /n pl *-yya*/ reed mat maker.

حصار *ḥuṣaar* /n/ *[mus]* (the note) A flat.

حصير *ḥaṣiir* /coll n/ woven reed matting.

حصيرة *ḥaṣiira* /n/ **1** /pl *ḥuṣr, ḥaṣaayir*/ reed mat. ‖*ɢala l-ḥaṣiira* penniless, flat broke. - *ḥaṣiirit gibna* rush sieve for straining curds. - *ḥaṣiirit iṣ-ṣeef wasɢa [prov]* (summer's mat is broad) there's always room for guests in

the summer (because one can put a mat down anywhere and sleep on it). - *kureek ḥaṣiira* hydraulic car-lift. **2** /pl *ḥaṣiir/ [naut]* bottom part of the hull of a sailing boat.

اتحصر *ʕitḥaṣar* /vi/ passive of *ḥaṣar*. - iva *mitḥiṣir*.

انحصر *ʕinḥaṣar* = *ʕitḥaṣar*. - iva *minḥiṣir*.

حاصر *ḥaaṣir* /vt/ to surround, contain, besiege. *ʕil-buliiṣ ḥaaṣir il-muharribiin* the police surrounded the smugglers. *firʔit il-maṭaafi ḥaṣrit in-naar* the firemen contained the fire. - vn *ḥiṣaar, muḥaṣra*; ava/pva *miḥaaṣir*; pva *muḥaaṣar*↑.

حصار *ḥiṣaar* /n pl *-aat*/ siege.

اتحاصر *ʕitḥaaṣir* /vi/ to be surrounded, be contained, be besieged. - iva *mitḥaaṣir*.

ح ص ر م

حصرم *ḥaṣram* **1** /vt/ to prevent the ripening of (grapes or dates). *ʕig-gaww*[a] *ḥaṣram il-ʕinab* the weather spoiled the grapes. **2** /vi/ to become sour or otherwise unpleasant in taste. - ava *miḥaṣram*.

حصرم *ḥuṣrum* /coll n/ unripe grapes or dates.

ح ص ص

حصّة *ḥiṣṣa* /n pl *ḥiṣaṣ*/ **1** class period. *ʕandina n-nahar-da ḥiṣṣit riyaaḍa* we have a mathematics class today. **2** share, allotment. *ḥiṣṣit il-muwaẓẓaf fit-taʕminaat l-igtimaʕiyya* the employee's social insurance contribution. *ḥiṣṣit-ak kaam fir-ruzz* how much is your share of the rice?

[1] ح ص ل

حصل *ḥaṣal (a)* /vi/ to happen, take place, occur. *ʕeeh illi b-yiḥṣal hina* what's going on here? *ḥaṣalit ḥariiqa fil-ʕimaara* a fire occurred in the building. *ʕil-ḥadsa lli ḥaṣalit laha* the accident that happened to her. *ma-ḥaṣal-f*[i] *liyya f-faraf* I haven't had the honour. *ḥaṣal ʕandi sahw* I forgot. *ḥaṣal minnu xalaṭ* he made a mistake. *ḥaṣal fii kasr* it got broken. ‖ *ḥaṣal xeer* it turned out O.K., nothing serious happened. - *ḥuṣuul il-bala wala ntiẓaar-u [prov]* it's better to suffer a calamity than to live in expectation of it. - *ma-yiḥṣal-f* (1) (also *ʕin ʃa-lla ma-yiḥṣal*) may it not happen! God forbid! (2) it'll never happen (as you say), your threats are empty. - vn *ḥuṣuul*; ava *ḥaaṣil*.

¶ *ḥaṣal ʕala*↑ to obtain, get. *ḥaṣalt*[a] *ʕad-dukturaah* I obtained a doctorate.

حاصل *ḥaaṣil* /n/ **1** state of affairs. *da l-ḥaaṣil* that's the way things stand. **2** *[rur]* storehouse for grain. **3** *[math]* result. *ḥaaṣil iḍ-ḍarb* product.

محصول *maḥṣuul* /n pl *maḥaṣiil*/ crop, yield. *maḥaṣiil ṣefiyya* summer crops. *ʕir-rayy il-maẓbuuṭ bi-yzawwid maḥṣuul il-ʕarḍ* proper irrigation increases the yield of the land.

حصالة *ḥuṣaala* /coll n/ *[rur]* grains and heavy straw left after winnowing.

حصيلة *ḥaṣiila* /n/ amount collected, takings. *ḥaṣiilit bank id-damm*[i] *kaam litr in-nahar-da* how many litres did the blood bank collect today?

حصّالة *ḥaṣṣaala* /n pl *-aat*/ money-box.

حصّل *ḥaṣṣal* /vt/ **1a** to catch up with. *maddeet li-vaayit ma ḥaṣṣalt-u-hum* I hurried till I caught up with them. *kaanit ḥa-tintiḥir zayy*[i] *ma-ttafaqna w-kunt*[a] *ḥ-aḥaṣṣal-ha* she would have killed herself as we had agreed and I was going to follow her. **1b** to manage to get, obtain with effort. *ruḥt ig-gamʕiyya w-ḥaṣṣalt(-i-li) farxa* I went to the co-operative and managed to get a chicken. ‖ *taḥṣiil ḥaaṣil* (1) without due care, in a slapdash way, as in *ʕamal if-furʏl*[i] *taḥṣiil ḥaaṣil* he did the work sloppily. (2) something (so obvious as to be) hardly worth stating, as in *yibqa taḥṣiil ḥaaṣil lamma nquul ʕinnu laazim kaan fii ʕazma been is-sawra wil-ʕixwaan* needless to say, there had to be a crisis between the Revolution and the Muslim Brothers. **2a** to reach. *ḥa-nḥaṣṣal ʕiskindiriyya qabl iḍ-ḍalma* we'll reach Alexandria before it's dark. *ma-ḥaṣṣal-f*[i] *la marḥala talta wala rabʕa* he didn't get to the third or fourth stage. *ʕil-manga ḥaṣṣalit sittiin qirʃ ik-kiilu* mangoes have reached sixty piastres a kilo. ‖ *hiyya ḥaṣṣalit baqa* has it come to this then? have things come to such a pass? - *kull-u mḥaṣṣal baʕḍ-u* it all comes to the same thing. - *la mḥaṣṣal wala mwaṣṣal* good-for-nothing. **2b**↑ to grasp, comprehend. *ʕiṭ-ṭalaba ma-ḥaṣṣaluu-ʃ id-dars* the students didn't grasp the lesson. **3a** to collect (dues). *ṣaaḥib il-beet bi-yḥaṣṣal il-ʕigaar yoom il-xamiis* the landlord collects the rent on Thursday. **3b** to yield (in dues). *ʕil-ʕimaara bi-tḥaṣṣal tultumiit gineeh fiʃ-ʃahr* the building brings in a revenue of three hundred pounds a month. - vn *taḥṣiil*; ava/pva *miḥaṣṣal*.

محصّل *muḥaṣṣil* /n */ collector of dues (e.g., fares, debts, taxes).

محصّلة *muḥaṣṣila* /n pl *-aat/ [math]* resultant.

اتحصّل *ʕitḥaṣṣal* /vi/ **1** to be collected (of dues). **2** to be comprehended, be grasped. - iva *mitḥaṣṣal*.

¶ *ʕitḥaṣṣal ʕala* to obtain (with effort). *ʕitḥaṣṣalt*[a] *ʕala talaata gneeh wi-xaatim dahab* I managed to get hold of three pounds and a gold ring.

متحصّل *mitḥaṣṣal*↓ /n/ income. *magmuuʕ il-mitḥaṣṣal maʕaaya ʃahri ʕitnaaʃar gineeh* my total monthly income is twelve pounds.

استحصل *ʕistaḥṣal*↓ /vi/ to gain possession (of s.th.) by exertion. *yiftaval yoom bi-ḥaal-u ʕalaʃaan yistaḥṣal-lu*

ɛàla ɛiſriin ɋirf he works the whole day long to get twenty piastres. - ava *mis-taḥṣal*.

ح ص ل [2]
حوصلة *ḥuṣála, ḥuṣla* /n pl *-aat, ḥawaaṣil*/ craw, crop of a bird. ‖*ḥuṣalt-u dayyiɋa* he's hot-tempered.

ح ص ل ب –
حصلبان *ḥaṣalbaan* /n/ rosemary.

ح ص ن [1]
حصن *ḥiṣn* /n pl *ḥuṣuun*/ fortress.
حصانة *ḥaṣaana* /n pl *-aat*/ immunity. *ʕil-ḥuqna di b-tiɛmil ḥaṣaana min id-diftirya* this injection gives immunity from diphtheria. *ʕil-ḥaṣaana d-diblumasiyya* diplomatic immunity.
حصين *ḥaṣiin* /adj/ impregnable. *ḥigaab il-ḥiṣn il-ḥaṣiin [magic]* the amulet of unfailing protection.
حصّن *ḥaṣṣan* /vt/ **1** to fortify, protect. **2** to immunize (against disease). **3** to cast a spell as protection against the evil eye. *miḥaṣṣan min if-feen↓ [women]* may you be protected from harm. - vn *taḥṣiin*; ava/pva *miḥaṣṣan*.
تحصين *taḥṣiin* /n pl *-aat*/ charm or spell to protect one from evil.
اتحصّن *ʕitḥaṣṣan* /vi/ passive of *ḥaṣṣan*. - iva *mitḥaṣṣan*.

ح ص ن [2]
حصان *ḥuṣaan* /n pl *ḥiṣína*/ **1** stallion, (loosely) a horse of either sex. *ɋiwwit ḥuṣaan* horsepower. *ḥuṣaan il-qafz [athl]* vaulting horse. **2** knight (chess piece).

ح ص و [1]
حصو *ḥaṣw* /coll n/ pebble(s), fragment(s) of stone, pottery etc.
حصى *ḥaṣa = ḥaṣw*. ‖*ḥaṣa lbaan [bot]* rosemary.
حصوة *ḥaṣwa* /unit n, pl *ḥaṣaawi*/ a pebble, a fragment of stone. *ḥaṣwa fik-kila* a stone in the kidney. ‖*ḥaṣwit malḥ[i] f-ɛeen illi ma-yṣalli ɛan-nabi* a grain of salt in the eye of whoever refuses to bless the Prophet (a formula of protection against the evil eye). - *waaɛi zayy il-ḥaṣwa* very thrifty.
حصواية *ḥaṣwaaya = ḥaṣwa*.

ح ص و [2] see ح ص ا و : *ḥaṣaawi*

ح ص ى [1]
أحصى *ʕaḥṣa↑* /vt/ to count, enumerate. - vn *ʕiḥṣa*.
إحصاء *ʕiḥṣa* /n/ statistics.
إحصائيّة *ʕiḥṣaʕiyya* /n pl *-aat*/ statistic.

ح ص ى [2] see ح ص و [1] : *ḥaṣa*

ح ض ر [1]
حضر *ḥaḍar (a)* /vt/ **1** to attend, be present at. *ḥaḍart il-muḥaḍra* I attended the lecture. *ma-ḥaḍart[i]-ʃ il-film* I didn't go to the film. *fil-waɋt il-ḥaaḍir* at the present time. ‖*badiht-u ḥaḍra* he is quick-witted. **2** to be a contemporary of, be around at the same time as. *ḥaḍart-u fig-geeʃ* I was in the army when he was. — /vi/ **3**↑ *[Isl]* to become due (of prayer). *ʕiṣ-ṣala ḥaḍarit* it is time to pray. *dayman ṣalaat-u ḥaḍra* or *dayman bi-yṣalli ḥaaḍir* he is always prompt in his prayers. - vn *ḥuḍuur*; aya *ḥaaḍir*.
حضور *ḥuḍuur* /n/ presence. ‖*ḥuḍuur wi-nṣiraaf* clocking in and out.
حاضر *ḥaaḍir[i]* /interj/ at your service! O.K.! (indicating willingness to comply with an order or request).
حضرة *ḥaḍra* /n/ **1** /usu in constr, pl *ḥaḍaraat*/ formal or respectful form of address to, and title of, a man or woman. *ḥaḍrit-ak mineen* where are you from, Sir? *ḥaḍrit id-duktuura* the (respected) lady doctor. ‖*ʕiṣ-ṣala ɛala ḥaḍrit in-nabi* blessings be upon the Prophet! - *ya ḥaḍrit* (1) sarcastic form of address. (2) form of address used to attract the attention of one whose name is unknown to the speaker. **2** /pl *-aat, ḥuḍar*/ **2a** Sufi ceremony, dhikr. **2b** tomb of any venerated Muslim religious figure.
حضارة *ḥaḍaara↑* /n pl *-aat*/ civilization.
محضر *maḥḍar* /n pl *maḥaaḍir*/ **1** formal record or memorandum of a case reported to the police. *maḥḍar ʃakwa ḍidd ig-giraan* report of a complaint against the neighbours. ‖*ḥa-tiftaḥ-li maḥḍar* ≈ are you going to conduct an inquest? (why) are you going to start asking all these penetrating questions? **2** official record of proceedings, minutes. *maḥḍar ig-galsa* the minutes of the session. *maḥḍar il-gard* inventory, list. **3** gathering, session. *maḥḍar xeer* (1) informal meeting to settle a quarrel. (2) mediator in a quarrel. **4** presence. *maḥḍar-u laṭiif* he is pleasant company. **5** /prop n/ a spirit invoked in the *zaar*.
محضر *muḥḍar* /n */ *[leg]* writ server.
حضّر *ḥaḍḍar* /vt/ **1** to prepare, get ready. *ḥaḍḍar ʃanṭit-u* he packed his bag. ‖*ḥaḍḍar muxx-(u)* to concentrate, keep one's wits about one, as in *laazim tiḥaḍḍar muxx-ak ɛalaʃaan tifham id-dars[i] kwayyis* you have to concentrate to understand the lesson well. - *ḥaḍḍar id-damm* to stimulate the blood, give energy, as in *ʕakl ik-kibda bi-yḥaḍḍar id-damm* eating liver increases vitality. - *ḥaḍḍar-lak il-xeer [women]* may He (God) bring you good fortune! (a courteous response to *ḥaaḍir*

q.v.). **2** to call up (spirits). **3** to mark as present. *ʕibqa ḥaḍḍar-ni fik-kaff* put me down as present on the list. - vn *taḥḍiir*; ava *miḥaḍḍar*.

تحضير *taḥḍiir* /n pl *-aat*/ preparation.

تحضيرى *taḥḍiiri* /adj/ *[acad, obsol]* preparatory, elementary.

محضّر *muḥaḍḍir* /n */ laboratory assistant.

اتحضّر *ʕitḥaḍḍar* /vi/ passive of *ḥaḍḍar*. - iva *mitḥaḍḍar*.

حاضر *ḥaadir*[2]↑ **1** /vt/ to lecture to. **2** /vi/ to lecture, present a lecture. - ava *muḥaḍra*; ava *miḥaadir*.

محاضرة *muḥaḍra* /n pl *-aat*/ lecture.

محاضر *muḥaadir* /n */ lecturer.

استحضر *ʕistaḥḍar* = *ḥaḍḍar*. - vn *ʕistiḥḍaar*; ava/pva *mustaḥḍar*.

مستحضرات *mustaḥḍaraat* /pl n/ preparations, products. *mustaḥḍaraat tagmiil* beauty preparations.

استحضّر *ʕistaḥaḍḍar*↓ /vi/ to prepare oneself. - ava *mistaḥaḍḍar*.

ح ض ر[2] see ح ظ ر

ح ض ن

حضن *ḥaḍan (u)* /vt/ **1** to embrace. *raaḥit maḥḍuuna fiyya* she rushed into my arms. **2** to stick close to. *lamma tirkin il-ʕarabiyya laazim tuḥḍun ir-raṣiif* when you park the car you should hug the kerb. - vn *ḥaḍn*; ava *ḥaaḍin*; pva *maḥḍuun*.

حضن *ḥuḍn* /n pl *ʕaḥḍaan*/ **1** bosom (in contexts of embracing). *xadu baʕḍ[i] bil-ḥuḍn* they hugged each other. *raaḥit waxdaa f-ḥuḍn-a-ha* she took him in her arms. ‖ *ʕitrabba f-ḥuḍn[i] ʕahl-u* he was raised in the bosom of his family. **2** armful, armload. *xud-lak ḥuḍn[i] barsiim ʕalaʃaan ḥumart-ak* take an armful of clover for your donkey.

حضانة *ḥaḍaana* /n/ **1** (also *daar ḥaḍaana*) nursery school. *duur ḥaḍaana* nursery schools. **2** custody (of children).

حضّانة *ḥaḍḍaana* /n pl *-aat*/ incubator (for chicks).

انحضن *ʕitḥaḍan* /vi/ to be embraced. - iva *mitḥiḍin*.

انحضن *ʕinḥaḍan* = *ʕitḥaḍan*. - iva *minḥiḍin*.

حضّن *ḥaḍḍan* **1** /vt/ to bring close. *ḥaḍḍan ik-kutub fi-baʕḍ[a] ʕaʃaan tiddi makaan* move the books together to make more room. — /vi/ **2** to pull over. *fardit kawitf[i] ḍarabit wi-ma-lḥiqt[i]-ʃ ʕaḥaḍḍan yimiin* a tyre blew and I didn't have time to pull over to the right. **3** to clinch (in boxing). - vn *taḥḍiin*; ava/pva *miḥaḍḍan*.

اتحضّن *ʕitḥaḍḍan* /vi/ to be brought close together. - iva *mitḥaḍḍan*.

ح ض ى

محظيّة *maḥḍiyya*↓ /n pl *-aat, maḥaaḍi*/ favourite woman.

استحظى *ʕistaḥḍa* /vt/ to treat (a woman) as a favourite (of a man). - ava/pva *mistaḥḍi*.

ح ط ب

حطب *ḥaṭab* /coll n/ dry stalks of harvested crops, and other vegetable refuse, used for fodder and kindling.

حطّاب *ḥaṭṭaab* /n */ *[obsol]* collector and seller of firewood.

حطّب *ḥaṭṭab* /vi/ to practise quarter-staff fencing. - vn *taḥṭiib*; ava *miḥaṭṭab*.

تحطيب *taḥṭiib* /n/ quarterstaff fencing.

ح ط ط

حطّ *ḥaṭṭ (u)* /vt/ **1a** to put, place, set. *ḥuṭṭ[i] ʃelt-ak* set down your load. *ḥuṭṭ[i] nafs-ak maṭraḥ-i* put yourself in my place: *ḥaṭṭeet ʕala wiff iṣ-ṣiniyya ḳiilu laḥma* I put a kilo of meat in the pan. *ḥaṭṭuu fis-sign* they put him in prison. ‖ *ḥaṭṭ[i] rigl-(u) fi-* to set foot in, as in *min ʕawwil ma ḥaṭṭeet rigl-i fil-balad* since I first set foot in the town. - *ḥaṭṭ[i] ʕiid-(u) fi-* to put (one's) hand to, get to work on, as in *miʃ ḥ-alaaqi waqt aḥuṭṭ[i] ʕiid-i fii ʕin-nahar-da* I shan't find time to get round to it today. - *ḥaṭṭ[i] ʕiid-(u) ʕala* (1) to get (one's) hands on, acquire, as in *ʕaah law ʕirift aḥuṭṭ[i] ʕiid-i ʕala ḳirfeen* ah, if only I knew how to get my hands on some money! (2) to put (one's) finger on, determine, as in *ʕana ḥaasis bi-diiḳ bass[i] miʃ ḳaadir ʕaḥuṭṭ[i] ʕiid-i ʕas-sabab* I feel depressed but I can't put my finger on the cause. - *ḥaṭṭ[i] ʕeen-(u) ʕala* to set (one's) sights on, set one's heart on, as in *hiyya ḥaṭṭa ʕen-ha ʕalee min yoom ma ʃafit-u* she's been out to get him since the day she saw him. - *ḥaṭṭ-a-ha waaṭi* (to bow one's head) to be meek, be humble. - *ḥaṭṭ-(u) fil-ʕiʕtibaar* to take (s.th.) into consideration. - *ḥaṭṭ-(u-hum) ḳuddaam baʕḍ* to set (people) in confrontation with one another, as in *ʕinta dayman bi-tḥuṭṭ-i-na ḳuddaam baʕḍ[i] kida leeh* why are you always forcing us into confrontation like that? **1b** to apply, administer. *tiḥuṭṭ[i] fazliin liʃ-faʕr* do you want any brilliantine on your hair? *ḥaṭṭit-lu dawa ʕag-garḥ* she put a medication on the wound for him. **2a** to pay. *ḥaṭṭeet fiiha miit gineeh* I paid a hundred pounds for it. **2b** to bet, place (money). *ḥuṭṭ[i] xamsa gneeh ʕala nimra sabʕa* put five pounds on number seven! - /vi/ **3** to alight. *ʕin-naḥla ḥaṭṭit ʕal-warda* the bee alighted on the flower. ‖ *ʕin ʃa-lla ygii-lak wi-yḥuṭṭ[a] ʕaleek* may disaster come and rest upon you! - *ma-bi-yḥuṭṭ[i]-ʃ waaṭi* he is very proud. **4** to become exhausted, become weak,

collapse. - vn *ħaṭṭ, ħaṭaṭaan*; ava *ħaaṭiṭ*; pva *maħṭuuṭ*. ¶ *ħaṭṭ[i] min* to detract from, undermine. *bi-yħuṭṭ[i] min ʿimit-ha* he runs her down.

حطّة *ħaṭṭa* /pl *-aat*/ instance noun of *ħaṭṭ*. ‖ *ħaṭṭa ya baṭṭa* beginning phrase of child's rhyme used to set the rhythm in games.

حطّة *ħiṭṭa* /n/ degradation, debasement. *di ħiṭṭa f-ʃaraf-ak* that's an insult to your honour. *huwwa ħiṭṭa f-ʿelt-u* he is a disgrace to his family.

أحطّ *ʃaħaṭṭ* /el/ more/most degenerate, more/most debased. *da-nta ʃaħaṭṭ[i] bani ʃaadam ʿumr-i ʿabilt-u* you're the basest man I've ever met!

حطيطة *ħaṭiiṭa* /adj invar/ exhausted, whacked, done in.

محطّ *maħaṭṭ* /n/ focal point, object, centre. *maħaṭṭ il-ʃanẓaar* the object of attention. ‖ *ħaṭṭ-i-lu maħaṭṭ* he intrigued against him.

محطّة *maħaṭṭa* /n pl *-aat*/ **1** alighting point, stop. *maħaṭṭit ʃutubiis* bus stop. *maħaṭṭit ʿaṭr* railway station. **2** station, installation. *maħaṭṭit banziin* petrol station, filling station. *maħaṭṭit ʃizaaʿa* or *maħaṭṭit ʃirsaal* radio station. *maħaṭṭit kahraba* power plant.

انحطّ *ʃinħaṭṭ* /vi/ **1a** to be put, be placed, be set. ‖ *ruuħ ʃitħaṭṭ* go sit down **and get out of the way!** - *ʃitħaṭṭ[i] ʃuqʿud* sit down and shut up! **1b** to be applied, be administered. **2** to be paid. **3** to be bet, be laid as a bet. - iva *mitħaṭṭ*.

انحطّ *ʃinħaṭṭ* /vi/ **1** = *ʃitħaṭṭ*. **2**↑ to degenerate, become debased. *ʃaxlaaq-u nħaṭṭit* his morals degenerated. *ya munħaṭṭ* you degenerate! - vn *ʃinħiṭaaṭ*↑; ava *minħaṭṭ, munħaṭṭ*.

حطّط *ħaṭṭaṭ* /vt/ **1a** to lift down, lower. *ħaṭṭaṭit if-feela min ʿala raas-u* she took down the load from off his head. **1b** to unburden, (help to) unload. *ħaṭṭaṭ is-sitt[i] di* help that lady put down her load (from off her head). **2** to cause to pay. *ħaṭṭaṭ-ni ʿarbuun xamsa gneeh* he made me pay a five pound deposit. **3** to cause to alight. *ħâṭṭaṭt in-naħl[a] ʿaf-ʃagara* I brought the bees down on the tree. - vn *taħṭiiṭ*; ava/pva *miħaṭṭaṭ*.

اتحطّط *ʃitħaṭṭaṭ* /vi/ passive of *ħaṭṭaṭ*. - iva *mitħaṭṭaṭ*.

ح ط م

حطّم *ħaṭṭam*↑ /vt/ to shatter, wreck. *ʃaʿṣaab-u mħaṭṭama* his nerves are wrecked. - vn *taħṭiim*; ava/pva *miħaṭṭam, muħaṭṭam*.

اتحطّم *ʃitħaṭṭam* /vi/ to be shattered, be wrecked. - iva *mitħaṭṭam*.

ح ظ ر

حظر *ħaẓar (u)* /vt/ **1** to forbid, prohibit, ban. *ħaẓarit ʿaleehum il-liʿb[i] fiʃ-ʃaariʿ* she forbade them to play in the street. ‖ *wiqiʿ fil-maħẓuur* to take a false step. ‖ *ħaẓr[i] tagawwul* curfew. **2** to catch (s.o.) in the act. - vn *ħaẓr*; ava *ħaaẓir*; pva *maħẓuur*.

حظير، حضير *ħaḍiir* /n pl *ħiḍraan*/ *[rur]* **1** hall or corridor off which are situated a number of smaller rooms. **2** small roof-top room usually for storing milk and dairy products.

حظيرة *ħaẓiira*↑ /n pl *ħaẓaayir*/ enclosure or pen for animals.

اتحظر *ʃitħaẓar* /vi/ **1** to be forbidden, be prohibited. **2** to be caught in the act. - iva *mitħiẓir*.

انحظر *ʃinħaẓar* = *ʃitħaẓar*. - iva *minħiẓir*.

ح ظ ظ

حظّ *ħaẓẓ[1] (i)* /vt/ to give pleasure to, delight. *ʃallaah yiħiẓẓ-ak ya ʃeex [joc]* God grant you enjoyment! (said to s.o. in appreciation of his entertaining company). - vn *ħaẓẓ, ħaẓaẓaan*; ava *ħaaẓiẓ*; pva *maħẓuuẓ*.

حظّ *ħaẓẓ[2]* /n pl *ħuẓuuẓ*/ **1** luck, fortune. *ħaẓẓ-i maayil* I'm out of luck. *ħaẓẓ-a-ha zayy il-bumb* she has fantastic luck. *ʃana w-ħaẓẓ-i* I'll take my chance. *ʃid-dinya ħuẓuuẓ* life is a matter of luck. ‖ *ħaẓẓ-ak fi-ṭiiz-ak [abus]* you have incredibly good (or bad) luck! **2** enjoyment, fun. *ʃibn[a] ħaẓẓ* fun-lover, happy-go-lucky type. *saaʿit il-ħaẓẓ[i] ma-titʿawwaḍ-ʃ [prov]* you can't make up for a lost moment of pleasure. *xad ħaẓẓ-u minha w-sab-ha* he had his fill of pleasure from her and then left her.

محظوظ *maħẓuuẓ* /adj */ lucky.

اتحظّ *ʃitħaẓẓ* /vi/ to enjoy oneself, have a good time. *ʃitħaẓẓu ʿabl iʃ-ʃabaab ma yṭiir minkum* enjoy yourselves before youth flies from you! - ava *mitħaẓẓ*.

ح ظ ى see ح ض ى

ح ف د

حفيد *ħafiid*↑ /n pl *ʃaħfaad*/ grandson.

حفيدة *ħafiida*↑ /n pl *ʃaħfaad*/ granddaughter.

ح ف ر

حفر *ħafar (u)* /vt/ **1** to excavate, dig. *ħafaru maṭraħ il-ʿalaama* they dug up the place where the marker was. ‖ *ħafar il-biir bi-ʃibra [prov]* (to dig a well with a needle) to persevere with patience and skill. **2** to make a groove or grooves, chisel, carve etc. - vn *ħafr*; ava *ħaafir*; pva *maħfuur*.

حفرة *ħafra* /pl *-aat*/ instance noun of *ħafr*. ‖ *ħafra ʿafra* barren and uninhabited land, desolate area.

حافر *ħaafir* /n pl *ħawaafir*/ hoof.

حفرة *ħufra* /n pl *ħufar*/ hole, pit.

حفّار *ħaffaar* /n * and pl *ħaffaara*/ **1** digger, labourer

engaged in digging. **2** engraver. **3** woodpecker.
اتحفر *ʕithafar* /vi/ **1** to be excavated, be dug up. **2** to be marked with a groove or grooves, be chiselled, be carved, be etched. - iva *mithifir*.
انحفر *ʕinhafar* = *ʕithafar*. - iva *minhifir*.

ح ف ز
حفز *ħafaz (i)* /vt/ to encourage, stimulate, give incentive to. - vn *ħafz, ħafazaan*; ava *ħaafiz*.
حافز *ħaafiz* /n pl *ħawaafiz*/ incentive. *ʔil-ʔagr il-ʔiḍaafi yuʕtabar ħaafiz lil-muwaẓẓaf* the extra pay is considered an incentive for the employee.

ح ف ض see ح ف ظ: *ħafaḍ, ħaafiḍ, ħufaaḍ, maħfaḍa, ʔithafaḍ, ʔinħafaḍ, ħaffaḍ, miħaffaḍ, ʔitħaffaḍ*

ح ف ط
حفّاطة *ħuffaaṭa* /n pl *-aat*/ six-holed single-reed pipe shorter and fatter than the *naay*. - also *ʕuffaaṭa*.

ح ف ظ
حفظ *ħafaẓ (a)* /vt/ **1a** to keep, retain, store. *bi-yiħfaẓu ʃwayya min il-ʔamḥ[a] ʕaʃaan yibʔa taʔaawi* they save some of the wheat for seed. *xud il-fuluus di ʔiħfaẓ-ha ʕandak* take this money and keep it with you. ‖*ma-b-yiħfaẓ-ʃ[i] gmiil* he is ungrateful. **1b** *[admin]* to file, put on file for reference. **1c** *[leg]* to suspend action on (a case). *ma daam iʂtalaħtu yibʔa l-buliiʂ yiħfaẓ it-taħʔiiʔ* since you have reached a settlement the police will drop the case. **2a** to protect, preserve (from harm). *ʔil-waraʔ bi-yiħfaẓ-ha min it-turaab* the paper protects it from dust. *ʔallaah yiħfaẓ-ak* God preserve you! (in response to praise and generous or kind words or actions). *fi-ħifẓ illaah* (go) in God's safe-keeping! goodbye! **2b** to keep a watch on. *ʔiħfaẓ lisaan-ak* watch your tongue! *ʔiħfaẓ markaz-ak* (have a regard for your position) ≈ watch your step! **3** (also *ħifiẓ, ħafaḍ* or *ħifiḍ*) **3a** to memorize, learn by heart. *ma-kan-ʃ[i] maʕaaya ʔalam fa-ħafaẓt in-nimra* I didn't have a pencil on me, so I memorized the number. *ħafaẓt il-ʔaṣiida kull-a-ha f-talatt iyyaam* I got the whole poem off by heart in three days. **3b** to learn (a lesson). *ʔiza ma-ħafaẓt[i]-ʃ id-dars[i] kwayyis ħ-addii-k sifr* if you don't learn the lesson well, I'll give you a zero. ‖*ʔiħna ħafẓiin ik-kalaam da* we know all about that, that's not new to us. - vn *ħifẓ, ħifḍ*; ava *ħaafiẓ, ħaafiḍ*; pva *maħfuuẓ, maħfuuḍ*.
¶ *ħifẓan ʕala*↑ out of regard or concern for. *miʃ ħ-aballax il-buliiʂ ħifẓan ʕala markaz-ak* I shall not inform the police so as not to jeopardize your position.
حافظ *ħaafiẓ*[1], *ħaafiḍ* /n pl *ħuffaaẓ, ħafaẓa*/ *[Isl]* one who has committed the Koran to memory.
حافظة *ħafẓa* /n pl *-aat, ħawaafiẓ*/ record of mail sent either interdepartmentally or by the postal system.
محفوظ *maħfuuẓ* /adj/ **1** preserved, canned. *laħma maħfuuẓa* canned meat. — *maħfuẓaat* /pl n/ **2** *[admin]* archives. **3** *[acad]* passages set for memorization in schools. *ʔiṭʕit maħfuẓaat* a piece for memorization.
حفاظ *ħufaaḍ* /n pl *-aat, ʔiħfiḍa, ħifiḍa*/ sanitary napkin.
حفيظ *ħafiiẓ* /n/ Protector (epithet of God). *ya ħafiiẓ* ≈ God protect us! (said on encountering something unpleasant or ugly).
محفظة *maħfaẓa, maħfaḍa*↓ /n pl *maħaafiẓ, maħaafiḍ*/ wallet, billfold. ‖*ʃanṭa maħfaza* zip-up case for papers.
اتحفظ *ʔithafaẓ, ʔithafaḍ* /vi/ passive of *ħafaẓ*. - iva *mithifiẓ, mithifiḍ*.
انحفظ *ʔinħafaḍ* = *ʔithafaẓ*. - iva *minhifiẓ*.
حفّظ *ħaffaẓ, ħaffaḍ* /vt/ **1** to cause to commit to memory. *ħaffaḍit-ni l-ʔinwaan* she made me memorize the address. *ʔiʃ-ʃeex bi-yħaffaẓ-hum il-qurʔaan* the sheikh teaches them the Koran by rote. — *ħaffaḍ* only **2** to bless (usually a baby) with the formula *miħaffaḍ (min ir-radi)*. — /vi/ **3** to put on a sanitary napkin. - vn *taħfiiẓ, taħfiiḍ*; ava/pva *mîħaffaẓ, miħaffaḍ*.
محفّظ *miħaffaḍ* /pva/ ‖*miħaffaḍ bi-suurit ir-raħmaan* protected by the sura of the Merciful (i.e. Koran sura 55; phrase used instead of a child's name as a prophylactic against the evil eye). *ʔil-miħaffaḍ ibn-ik feen* where's your son, bless him?
اتحفّظ *ʔithaffaẓ, ʔitħaffaḍ* /vt/ **1** to be made to learn (s.th.) by memory. *ʔitħaffaẓna l-qurʔaan biḍ-ḍarb* we were beaten into learning the Koran by heart. — /vi/ **2** to be learned by heart, be memorized. **3** (*ʔitħaffaḍ* only) to put on a sanitary napkin. - ava/iva *mitħaffaẓ*.
¶ *ʔitħaffaẓ ʕala* to take custody of, take into custody. *ʔin-niyaaba tħaffaẓit ʕala gism ig-garîima* the Prosecutor's office took custody of the material evidence of the crime. *ʔil-buliiʂ itħaffaẓ ʕalee fit-taxfiiba* the police took him into custody (and put him) in the lock-up.
تحفّظ *taħaffuẓ*↑ /n/ **1** aloofness, reserve. *kallim-ni bit-taħaffuẓ* he spoke to me aloofly. *bi-duun taħaffuẓ* without reservation. **2** *taħaffuẓaat* /pl n/ reservations. *ʔana liyya taħaffuẓaat ʕala n-nuqṭa di* I have some reservations on that point.
تحفّظي *taħaffuẓi*: *ħabs[i] taħaffuẓi* detention pending trial.
حافظ *ħaafiẓ*[2] /vi/ **1** to give protection. *bi-nruʃʃ-u b-buṭaas ʕaʃaan yiħaafiẓ ʕalee min il-mann* we spray it

with potash to protect it from aphids. *ma-ḥafiẓt^{i}-ʃ ɛak-kutub illi sallift^{i}haa-lak* you didn't take good care of the books I lent you. **2** to pay attention, give regard. *bi-yḥaafiẓ ɛala mawaɛiid-u* he is punctual. - vn *miḥafẓa, muḥafẓa, ḥifaaẓ*; ava *miḥaafiẓ, muḥaafiẓ*.

محافظة *muḥafẓa* /n pl *-aat*/ *[admin]* province, one of the twenty-five main administrative units into which Egypt is divided. ‖ *laazim ʃawaddii-k il-muḥafẓa* I must take you to the police!

محافظ *muḥaafiẓ* /n */ **1** governor of a province. **2** *[pol]* conservative. *ḥizb il-muḥaafiẓiin* the (British) Conservative Party. — /adj */ **3** conservative, traditional in outlook.

احتفظ *ʃiḥtafaẓ* /vi/ to retain possession. *b-aḥtifiẓ bii ka-ʃarfiif* I keep it as a record. *ʃiḥtafaẓu bil-buṭuula* they retained the championship. - vn *ʃiḥtifaaẓ*; ava *miḥtifiẓ, muḥtafiẓ*; pva *muḥtafaẓ*.

استحفظ *ʃistaḥfaẓ* **1** /vt/ to call upon (s.o.) to maintain and respect. **2**↓ /vi/ **2a** to be careful, take great care. *bi-yistaḥfaẓ ɛala kull^{i} ɋirf* he treasures every penny. **2b** *[leg]* to apprehend. - vn *ʃistiḥfaaẓ*; ava *mistaḥfaẓ*.

ح ف ف

حفّ *ḥaff (i)* /vt/ **1** to surround, make a border around. *ḥaffeena ʂ-ʂuura b-firiiɋ* we put a ribbon round the edge of the picture. *maḥfuuf bi-maxaaṭir*↑ surrounded by danger. **2** to trim, cut the edge off. *xud il-xaʃaba ḥiff-a-ha mig-gamb^{i} ʃwayya* take the piece of wood and trim it from the side a little. **3** to depilate, remove unwanted hair from. — /vi/ **4** to brush (against s.th.). *maaʃi yḥiff^{i} fil-ḥeeṭa* brushing up against the wall as he walks. - vn *ḥaff, ḥafafaan*; ava *ḥaafif*; pva *maḥfuuf*.

¶ *ḥaff^{a} ɛala* (or *fi-*) to take too much of (e.g., food). *ḥaff^{a} ɛal-fuul* (or *fil-fuul*) *lamma ma-fḍil-ʃ illa ɛeef* he ate the beans at such a rate that he found himself left with just bread (and no beans to eat it with).

حاف *ḥaaf* /adv/ by itself (either of bread without any accompaniment, which is a sign of want, or of food without bread, which is a sign of plenty). ‖ *ʃil-waaḥid yakul-ha ḥaaf ʃaḥsan ma yisraɋ* one would rather live on dry bread than steal. *min istaktar ɤumuus-u kal ḥaaf [prov]* ≈ one who overestimates his resources will soon have a real crisis. — /adjectivally/ *ɛeef ḥaaf* bread eaten alone.

حافّة *ḥaffa, ḥaaffa*↑ /n pl *-aat, ḥawaafi, ḥawaff*↑/ edge, border. *rigl-u ɛala ḥaffit il-ɋabr* he has one foot in the grave.

حفوف *ḥufuuf* /n/ **1** depilation, removal of unwanted hair from the body. **2** depilatory paste.

حفيف *ḥafiif* /n/ rustle, rustling sound.

اتحفّ *ʃitḥaff* /vi/ **1** to be surrounded. **2** to be trimmed. **3** to be depilated. - iva *mitḥaff*.

انحفّ *ʃinḥaff* = *ʃitḥaff*. - iva *minḥaff*.

حفّف *ḥaffif* /vt/ **1** to measure out (a quantity of goods) with niggardly exactitude, give (exact weight) and not a little more. **2** to depilate (a part of the body) with depilatory paste. - vn *taḥfiif*; ava/pva *miḥaffif*.

اتحفّف *ʃitḥaffif* /vi/ **1a** to depilate oneself, pluck out unwanted hair. **1b** to be depilated (of a part of the body). **2** to pay (excessive) attention to one's grooming. *mitḥaffifa ɛal-ʃaaxir* dolled up to the nines. **3** passive of *ḥaffif* 1. - ava/iva *mitḥaffif*.

ح ف ل

حفلة *ḥafla* /n pl *ḥafalaat*/ **1a** ceremony. *ḥaflit taʃbiin* memorial ceremony. **1b** party, celebration. *ḥaflit ɛiid milaad* a birthday party. **2** performance. *ḥaflit sinima* a cinema performance. *ḥaflit musiiqa* a concert.

محفل *maḥfal* /n pl *maḥaafil*/ **1** *[rur]* procession. **2** (masonic) lodge.

احتفل *ʃiḥtafal* /vi/ **1** to hold a celebration. *ʃiḥtafalu b-ɛiid gawaz-ḥum* they celebrated their wedding anniversary. **2** to give a warm welcome. *ʃiḥtafalu bil-ḥuggaag fil-maṭaar* they received the pilgrims at the airport with great rejoicing. - vn *ʃiḥtifaal*; ava *miḥtifil*.

احتفال *ʃiḥtifaal* /n pl *-aat*/ celebration.

ح ف ل ط

حفلط *ḥaflaṭ* /vt/ to overdo, be fussy in. *bi-tḥaflaṭ fi-wiff-a-ha* she overdoes her make-up. *ʃinta bi-tḥaflaṭ ɲafs-ak kida leeh* why are you so fussy about your appearance? *kalaam-u mḥaflaṭ* he talks in an exaggerated way (in order to impress). - vn *ḥaflaṭa*; ava/pva *miḥaflaṭ*.

حفلاط *ḥiflaaṭ* /adj/ foppish, extravagant in dress and manner.

حفلوط *ḥafluuṭ* = *ḥiflaaṭ*.

اتحفلط *ʃitḥaflaṭ* /vi/ **1** to preen oneself. **2** to be adorned or arranged in an extravagant manner. - ava/iva *mitḥaflaṭ*.

ح ف ن

حفن *ḥafan (i)* /vt/ to take in one's cupped hands. ‖ *bi-yiḥfin wi-yiddii* he gives to him without measure, he gives to him freely. - vn *ḥafn*; ava *ḥaafin*; pva *maḥfuun*.

حفنة *ḥifna, ḥafna* /n pl *-aat, ḥifan*/ handful. *ḥifnit ʂabuun* a handful of soap.

حفان *ḥifaan* /n pl *ʃiḥfina, ḥifína*/ quantity held by both hands cupped together. ‖ *ɛayyaṭt^{i} min kull^{i} ɛeen ḥifaan* ≈ I cried buckets.

اتحفن ʕitḥafan /vi/ to be taken in cupped hands. -iva *mitḥifin*.
انحفن ʕinḥafan = ʕitḥafan. -iva ***minḥifin***.

ح ف ى
حفى *ḥifi (a)* /vi/ to wear out one's shoes completely. *ḥa-tistanna lamma l-ʔawlaad yiḥfu ɛala ma tiʃtiri-lhum gizam* are you going to wait till the children have gone right through their shoes (and are going barefoot) before you buy them new ones? ‖ *riglee ḥifyit* to wear one's feet off, go far and wide (in search of s.th.), as in *dawwart[a] ɛala qiṭaɛ ʏiyaar lamma riglay-ya ḥifyit* I searched high and low for spare parts. -vn *ḥafa, ḥafayaan*; ava *ḥaafi, ḥafyaan*.
¶ *ḥifi wara* (or *ɛala*) to pursue, toil after. *ṭuul ɛumr-i-na ḥafyaniin wara luqmit il-ɛeef* we've spent all our lives chasing a living. *ḥifiina ɛaleek ʔimbaariḥ ma-laqena-k-ʃ* we wore ourselves out looking for you yesterday, but couldn't find you.
حافى *ḥaafi* /adj */ barefoot. *daayis ḥaafi leeh* why are you going barefoot?

ج ق ب
حقيبة *ḥaqiiba↑* /n pl *ḥaqaayib*/ satchel, bag. *ḥaqiiba diblumasiyya* diplomatic bag.

ح ق د
حقد *ḥaqad (i)* /vi/ to hold a grudge. ***dayman yiḥqid ɛala xalq illaah*** he's always holding grudges against people. -vn *ḥiqd, ḥiqd, ḥaqadaan*; ava *ḥaaqid*; pva *maḥquud*.
حقد *ḥiqd, ḥiqd* /n pl *ʔaḥqaad*/ hatred, rancour, spite. *fii ʔaḥqaad qadiima been il-ɛelteen* there are old feuds between the two families.

ح ق ر
حقير *ḥaqiir↑* /adj */ despicable.
أحقر *ʔaḥqar* /el/ more/most despicable.
حقّر *ḥaqqar* /vt/ to disparage. -vn *taḥqiir*.
احتقر *ʔiḥtaqar* /vt/ to despise. -vn ***ʔiḥtiqaar***; ava *miḥtiqir*; pva *muḥtaqar*.
استحقر *ʔistaḥqar↓* /vt/ to despise. -vn ***ʔistiḥqaar***; ava *mistaḥqar*.

ح ق ق
حقّ *ḥaqq[i] (i, u)* **1** /vt/ **1a** to find to be in the wrong. *ʔiḥna smiɛna lli ḥaṣal minnu w-ḥaqqenaa-lik* we have heard what he did and consider that he is in the wrong rather than you (or: for what he did to you). **1b** to admit (o.s.) to be in the wrong, blame (o.s.). *ʔana gaay ʔaḥuqq[i] nafs-i liik* I am coming to apologize to you (for what I have done). **2** /vi; imperf only/ to be appropriate or justifiable. *ma-yḥiqq[i]-lak-ʃ[i] titkallim biṭ-ṭariiqa di* you shouldn't be talking this way. ‖ *ʔilli yḥiqq-i-lak ʔiɛmil-u* do as you wish (since there's nothing to stop you). -*yiḥiqq-i-lu yquul kida* he's not to blame for talking that way (since no one seems to be able to shut him up, or: since everyone else is talking nonsense). -vn *ḥaqq, ḥaqaqaan*; ava *ḥaaqiq*; pva *maḥquuq*.
¶ *ḥaqq[a] ɛala* to kiss (e.g., the head) as a way of apology. *ḥuqq[a] ɛala ras-ha* kiss her head (in apology).
محقوق *maḥquuq* /adj */ in the wrong. *hiyya maḥquuqa-ma-kan-ʃ[i] yṣaḥḥ[i] tiɛmil kida* she's at fault; she shouldn't have done that.
حقّ *ḥaqq[2]* /n/ **1a** truth. *qul-li l-ḥaqq* tell me the truth. *ʔil-ḥaqq[i] yiɛla wala yiɛlaa-ʃ ɛalee ɛaali [prov]* (the truth rises and no-one, no matter how high, may rise above it) ≈ the truth will always out. *kilmit il-ḥaqq[i] ṭilɛit* (or *itqaalit*) the truth is out! now we have it! *kilmit il-ḥaqq[i] tuqaf fiz-zoor [prov]* ≈ people cannot accept the truth. ‖ *bi-ḥaqq* or *bil-ḥaqq* or *bi-ḥaqq[i] w-ḥaqiiq* or *bi-ḥaqq[i] w-ḥaqiiqi* really and truly, as in *tibqa ṣaḥb-i b-ḥaqq* then you are truly my friend, *bil-ḥaqq[a] ḥaṣal kida* honestly that's what happened, *ʔik-kalaam da b-ḥaqq[i] w-ḥaqiiqi* is that really so? is that on the level? - *ma-ḥadd[i]-ʃ ɛaarif yaaxud minnak ḥaqq[i] wala baaṭil* no one can get anywhere with you, trying to get something out of you is like trying to get blood out of a stone. -*ɛirif ʔinn allaah ḥaqq* ≈ to mend one's ways, as in *miʃ ḥ-aftiri minnu ɛaʃaan yitɛallim wi-yiɛraf ʔinn allaah ḥaqq[i] wi-ybiiɛ bit-tasɛiira* I shan't buy from him so that he may learn a lesson and mend his ways and sell at the fixed price. **1b** *ʔil-ḥaqq* Truth (epithet of God). **2** /in constr/ the appropriate thing for, what is fitting for. *ḥaqq-ak taakul* you should eat. *kaan ḥaqq-i ṭaradt-u-hum* I should have thrown them out. *kaan ḥaqq[i] gooz-ik yibuus riglee-ki* your husband should have kissed your feet. ‖ *bil-ḥaqq* (also *ʔilla bil-ḥaqq* or *min ḥaqq*) by the way, apropos of that, as in *(ʔilla) bil-ḥaqq[a] ɛala zikr iz-zawaag* ... by the way, talking of marriage .... **3** cost, what is payable (for an item bought or service rendered), worth. *ʔil-qalam da ḥaqq-u kaam* how much does this pencil cost? *ḥaqq if-faʏʏaala ɛan ʃahr[i] tamanya* the maid's wages for August. — /pl *ḥuquuq*/ **4** right, title, claim. *b-aṭaalib bi-ḥaqq-i* I demand my rights. *ḥuquuq madaniyya w-qanuniyya* civil and legal rights. *ḥuquuq il-ʔadaaʔ il-ɛalani [broadc]* royalties paid to artists for the broadcasting of their work. *liyya l-ḥaqq[i] f-ʔabuneeh* I'm entitled to a season ticket. *ṣaaḥib il-ḥaqq[a] ɛeen-u qawiyya [prov]* he who has right on his side acts boldly. *bayyin ḥaqq-ak*

wi-siib-u [prov] establish your rights and then drop the matter. ‖ *ʔil-ħaqq^{i} wil-mustaħaqq* full details of entitlement, as in *ħ-aqawwim ʕaħsan muħaami ɛaʃaan yibayyin il-ħaqq^{i} wil-mustahaqq* I'll hire the best lawyer to make clear what is owned by whom. *- liik* (or *ɛandak* or *maɛaak) ħaqq* (1) you're right, what you say is right. (2) you have the right, as in *law ḍarab-ak yibqa liik ħaqq^{i} tiḍrab-u* if he hits you you have the right to hit him. *- ɛala ħaqq* in the right, as in *ʔiz-zibuun dayman ɛala ħaqq* the customer is always right. *- ʔil-ħaqq^{a} ɛaleek* you are in the wrong. *- ħaqq-ak ɛalayya* (1) I owe you an apology. (2) rely on me to defend your rights (said to one angered or upset by the action of a third party). *- ħaqq-i ɛandak* you owe me an apology. *- fi-ħaqq-* with regard to, (s.o.) as in *ʔik-kalaam da wiħiʃ fi-ħaqq-a-ha* such talk could damage her reputation, *ɢaalu kalaam kuwayyis fi-ħaqq-ak* they spoke well of you, *ʔit-tuhma sabta f-ħaqq-u* the accusation has been proved against him. *- wi-ħaqq* ... (I swear to do s.th.) by my obligation to ..., as in *wi-ħaqq^{i} gaah in-nabi la-ʔagib-lak ɛarabiyya lamma titgawwiz* by (my obligation to) the mighty Prophet, I swear I'll get you a car when you get married, *wi-ħaqq^{i} min xallaa-k bani ʔaadam ħ-axalli wiff-ak ʃawaariɛ* by what I owe to Him Who made even you a man, I'll cut roads all over your face! *- xad ħaqq-(u)* to get (its) due (of attention, time etc.), as in *lamma f-fuxl^{i} ykuun waaxid ħaqq-u* when the work is being done as it should be, *ʔil-ɛeef ma-xad-ʃ^{i} ħaqq-u fit-taxmiir* the bread wasn't left to rise long enough. *- kal ħaqq-(u)* to infringe the rights of (s.o.), as in *ɛumr-i-na ma-kalna ħaqq^{a} ħadd* we've never treated anyone unjustly. *- ʔil-ɛeef wil-malħ^{i} lii ħaqq* breaking bread (with another) establishes obligations. — *ħuquuq* /pl n/ **5** law (as an academic discipline). *kulliyyit il-ħuquuq* the faculty of law. *xirriig ħuquuq* a graduate in law.

¶ *ħaqq^{i} ma* in return for, a compensation for. *maʃʃii-li ʃ-fuxlaana di ħaqq^{i} ma saɛidt-ak* get this business seen to for me in return for my having helped you.

حقّة *ħaqqa* /adv/ honestly, really, truly. *m-aqdar-ʃ^{i} ʔaqul-lik ħaqqa xadamtii-na qadd^{i} ʔeeh* honestly, I can't tell you how much help you've been to us! *ħaqqa l-walad bi-yzaakir ʈuul is-sana* as God's my witness, the boy studies all year long! *ħaqqa nta xadt^{i} fluus-ak* I say, did you really get your money?

حقّانى *ħaqqaani* /adj */ just, fair. *raagil ʈayyib wi-ħaqqaani* a decent and fair man.

حقّانيّة *ħaqqaniyya: wizaarit il-ħaqqaniyya [obsol]* the Ministry of Justice.

حقّ *ħuqq* /n pl *ʔiħqaaq, ħiqaaq*/ **1** small container, box, pot. **2** pelvis. ‖*fooq ħuqq-u w-duqq-u* (1) ≈ finish him off immediately, don't hesitate to punish him. (2) choose the most efficient plan and carry it out without hesitation. **3**↓ clay body of a funnel-shaped hand drum, (loosely) any of a variety of clay or wood funnel-shaped drums (see Pl.J, 6).

حقّة *ħuqqa = ħuqq*.

أحقّ *ʔaħaqq* /el/ more/most entitled, more/most deserving. *ʔana ʔaħaqq^{i} minnak bii* I have a better right to it than you.

حقيق *ħaqiiq: bi-ħaqq^{i} w-ħaqiiq* really and truly.

حقيقة *ħaqiiqa* /n pl *ħaqaayiq*/ fact, truth. *fii ħaqiiqa muhimma gamb il-ħaqiiqa di* there is (another) important fact (to consider) along with that one. *fil-ħaqiiqa* in fact. ‖ *ʔil-ħaqiiqa* the fact is, to tell the truth, as in *ʔil-ħaqiiqa ʔiħna saɛidna ʔahl-a-ha f-kull^{a} ħaaga* the fact is we helped her family in everything. *kaanit il-ħaqiiqa ɛagbaa-ni* to tell the truth she had taken my fancy.

حقيقى *ħaqiiqi* **1** /adj/ **1a** true, verifiable. *di qiṣṣa ħaqiqiyya* this is a true story. **1b** real, genuine. *da miʃ ħall^{a} ħaqiiqi* that's not a real solution. **2** /adv/ certainly, for sure. *di wiħʃa ħaqiiqi* this is indeed bad. *ħaqiiqi ma-kisbuu-ʃ il-matʃ^{i} laakin liɛbu kwayyis* it's true they didn't win the match, but they played well. *bi-ħaqq^{i} w-ħaqiiqi* really and truly.

اتحقّ *ʔitħaqq* /vi/ **1** to be found to be in the wrong. **2** to admit one's fault. *ʔana ħ-atħaqq^{i} lii* I'll apologize to him. - ava/iva *mitħaqq*.

انحقّ *ʔinħaqq = ʔitħaqq*. - ava/iva *minħaqq*.

حقّق *ħaqqaq* **1** /vt/ to make (s.th.) come true, fulfil. *rabb-i-na yħaqqaq-lak muraad-ak* may God make your wish come true. **2** /vi/ to carry out an investigation, inquiry or interrogation. *bi-yħaqqaq maɛa l-muttaham* he's interrogating the accused. - vn *taħqiiq*; ava *miħaqqaq*.

¶ *ħaqqaq fi-* to scrutinize. *ħaqqaqt^{i} fil-ɛafara gneeh ɛaʃaan ʔaɛraf ʔin kaanit muzayyafa walla laʔ* I looked closely at the ten-pound note to see if it was counterfeit or not.

تحقيق *taħqiiq* /n pl *-aat*/ **1** interrogation. *fii maɛaak taħqiiq bukra fil-qism* you will be interrogated tomorrow at the police station. **2** investigation, inquiry. *ʔil-buliis farag ɛannu rahn it-taħqiiq* the police let him go pending investigation. ‖*taħqiiq ṣuħafi* reportage.

محقّق *muħaqqiq, muħaqqiq*↑ /n */ **1** interrogator. **2** investigator.

اتحقّق *ʔitħaqqaq* /vi/ **1** to be fulfilled, come true.

2 (impersonal) passive of *ḥaqqaq* 2. *ʕil-muttaham itḥaqqaq maʕaa* the accused was interrogated. - ava/iva *mitḥaqqaq*.

¶ *ʕitḥaqqiq min* (or *fi-*) to scrutinize.

استحقّ *ʕistaḥaqq* **1** /vt/ to deserve, be entitled to, merit. *yistaḥaqq*^{a} *ʕugra ʕala kida* is he really entitled to be paid for that? *yistaḥaqq*^{a} *ʕalqa* he deserves a beating. **2** /vi/ to fall due. *ʕil-mablaɣ da yistaḥaqq*^{a} *ʕalee yoom xamastaaʃar maayu* he must pay this sum by May the fifteenth. *miʃ mistaḥaqq* ... not worth ..., as in *ʕil-ḥikaaya di miʃ mistaḥaqqa d-dawʃa di kull-a-ha* the matter is not worth all this fuss. - vn *ʕistiḥqaaq*; ava/pva *mistaḥaqq*.

مستحقّ *mustaḥaqq* /adj/ (fallen) due, owing. *ʕil-filuus il-mustaḥaqqa ʕaleek* the money you are due to pay. ‖ *ʕil-ḥaqq*^{i} *wil-mustaḥaqq* see *ḥaqq* **4**.

استحقّ *ʕistiḥaqqaq*$^{↓}$ /vi/ to look carefully, peer. - ava *mistiḥaqqaq*.

ح ق ل

حقل *ḥaql*$^{↑}$ /n pl *ḥuquul, ḥuqquul*/ **1** field, plot of land. *ḥuquul bitrool* oil fields. **2** area of activity. *ḥaql it-taʕliim ig-gaamiʕi* the field of university of education. **3** tabulation (on a typewriter).

ح ق ن

حقن *ḥaqan (i)* /vt/ to inject. *bi-yiḥqinu l-firaax ʕalafaan ma-tiʕyaa-ʃ* they inject the chickens so that they do not contract diseases. - vn *ḥaqn, ḥaqanaan*; ava *ḥaaqin*; pva *maḥquun*.

حقنة *ḥuqna* /n pl *ḥuqan*/ **1** injection. ‖ *ḥuqna faragiyya* enema. **2** hypodermic syringe. ‖ *raagil ḥuqna* a thorough pest. **3** malicious story told as an incitement. *ʕil-ḥuqan illi mudiir maktab-u b-yiddii-haa-lu zaʕʕilit-u minni* the tales his administrative assistant tells him have set him against me. **4** psychological boost. *natiigit l-imtiḥaan kaanit ḥuqna tamaam bin-nisbaa-lu* the exam result was a real shot in the arm for him.

اتحقن *ʕitḥaqan* /vi/ to be injected. - iva *mitḥiqin*.

انحقن *ʕinḥaqan* = *ʕitḥaqan*. - iva *minḥiqin*.

احتقن *ʕiḥtaqan* /vi/ *[path]* **1** to become inflamed. *ṣubaaʕ-i ḥtaqan* my finger became inflamed. **2** to become congested. - vn *ʕiḥtiqaan*; ava *miḥtiqin*.

ح ك ح ك

حككحك *ḥakḥak* /vt/ to rub clean or smooth with repeated action. *qaʕadit tiḥakḥak riglee-ha b-ḥagar il-ḥammaam* she rubbed away at her feet with the pumice stone. ‖ *raagil miḥakḥak* a finicky man. - vn *ḥakḥaka*; ava/pva *miḥakḥak*.

اتحكحك *ʕitḥakḥak* /vi/ to be rubbed clean or smooth. - iva *mitḥakḥak*.

ح ك ر

حكر *ḥikr* /n/ land or property owned by the government and leased to a private tenant.

احتكر *ʕiḥtakar* /vt/ to monopolize. *ma-yṣaḥḥ*^{i}*-ʃ ḥadd*^{i} *yiḥtikir ʕaqwaat iʃ-ʃaʕb* no one should monopolize foodstuffs on which the masses live. - vn *ʕiḥtikaar*; ava *miḥtikir*.

احتكار *ʕiḥtikaar* /n pl *-aat*/ monopoly.

ح ك ك

حكّ *ḥakk (u, i)* **1** /vt/ to rub. *laazim tiḥukk il-marham ʕal-garḥ*^{i} *marriteen fil-yoom* you should rub the ointment into the wound twice daily. ‖ *ḥagar ḥakk* gem-polishing stone. **2** /vi/ to rub together, grate. *lamma ʕaduus ʕad-dibriyaaj it-turuus bi-tḥukk* when I step on the clutch the gears grind. ‖ *maaʃi yḥukk* he stumbles along. - vn *ḥakk, ḥakakaan*; ava *ḥaakik*; pva *maḥkuuk*.

حكّة *ḥakka*^{1} **1** /inst n, pl *-aat*/ a rubbing, a scraping, a grinding. **2** /n/ *[path]* scabies.

حكّاك *ḥakkaak: ḥagar ḥakkaak* pumice stone.

اتحكّ *ʕitḥakk* /vi/ to be rubbed. - iva *mitḥakk*.

انحكّ *ʕinḥakk* = *ʕitḥakk*. - iva *minḥakk*.

احتكّ *ʕiḥtakk* /vi/ **1** to clash, get into conflict (with s.o.). *xallii-k fi-ḥaal-ak ma-tiḥtakk*^{i}*-ʃ bi-ḥadd* mind your own business and don't interfere with anyone else. **2** to be in contact, have dealings (with s.o.). - vn *ʕiḥtikaak*; ava *miḥtakk*.

احتكاك *ʕiḥtikaak* /n/ **1** friction. **2** social intercourse. *ʕil-iḥtikaak bin-naas bi-yʕallim iṭ-ṭifl izzaay yitʕaamil maʕa l-mugtamaʕ* contact with people teaches the child how to deal with society.

ح ك م

حكم *ḥakam*^{1} *(u)* /vt/ **1a** to rule over, govern. *ḥukm iʃ-ʃaʕb*^{i} *liʃ-ʃaʕb* the rule of the people by the people. ‖ *ḥukm il-ḥaakim fil-maḥkuum* tyranny, oppression, as in *bi-yʕamluu-na ḥukm il-ḥaakim fil-maḥkuum* they treat us like slaves. **1b** to arbitrate in. *miin ḥa-yuḥkum il-matʃ* who will referee the match? **1c** to declare (a verdict). *ʕil-maḥkama ḥakamit baraaʕa* the court declared a verdict of not guilty. **2a** to control, regulate. *ṭalʕa bitt*^{i} *mayṣa ma-ḥadd*^{i}*-ʃ ʕaarif yuḥkum-ha* she is turning into a spoilt girl - no one can control her. *bi-yʃidd il-xeeṭ ʕaʃaan yuḥkum taxaanit il-muuna* he pulls the string tight to regulate the thickness of the mortar. ‖ *ʕana maḥkuum bi-waqt* my time is limited. **2b** to hold tightly in position, grip. *ʕil-wiʃʃeen*

bi-yqaffilu l-mutoor wi-b-yuḥkumuu the two surfaces close up the motor and hold it together. **3** to coincide with. *yuḥkum yoom ʕarbaʕ* it falls on a Wednesday. — /vi/ **4** to pass judgement, declare a verdict. *ḥakamu liyya* they passed judgement in my favour. *ḥakamu ʕalayya* they condemned me. *ʕil-qaaḍi b-yuḥkum bi-farʕ il-muslimiin* the judge rules according to Muslim law (i.e. with justice). *rabb-i-na ḥakam ʕalayya ʕaʕiif fil-ḥaraam* Our Lord condemned me to live in sin. ‖ *ʕiẓ-ẓuruuf ḥakamit bi-kida* circumstances so ruled. - *ma-yuḥkum-ʃ [women in trad soc]* ≈ God forbid! how could you ever think such a thing? (sarcastically, in badinage). - /impersonally/ *ḥakamit kida* this is the way it (has) happened (and there is nothing anyone can do about it). **5** to grip, hold tightly. *ʕiṣ-ṣamuula b-tuḥkum ʕal-ʕamyant* the nut grips onto the asbestos. - vn *ḥukm*; ava *ḥaakim*; pva *maḥkuum*.

¶ *ḥakam ʕala* /usually imperf and neg/ to possess, as in *ma-yuḥkum-ʃ illa ʕala murattab-u* he has nothing but his salary. - *ḥakam ʕilla* to insist, as in *ʕumm-u ḥakamit ʕilla yruuḥ il-madrasa* his mother insisted that he go to school.

حكم *ḥakam*[2] *(i)* /vt/ to exercise firm control over. *ʕiḥkim iid-ak* tighten your grip. *ʕiḥkim in-niʃaan* take firm aim. - vn *ḥakamaan*; ava *ḥaakim*; pva *maḥkuum*.

حكم *ḥukm* /n pl *ʕaḥkaam*/ **1** judgement, verdict, sentence. *ḥuwwa waaxid ḥukm*[i] *xamastaaʃar sana* he's been sentenced to fifteen years. ‖ *ʕiḍ-ḍaruura liiha ʕaḥkaam* ≈ privation compels people to do things they would not normally consider. **2** stipulation, provision. *ʕaḥkaam qanuun il-ʕigraʕaat ig-ginaʕiyya* the stipulations of the criminal procedures law. — /adv/ **3** imperatively, necessarily. *ḥukm*[i] *laazim nizuur-u* we absolutely must visit him.

حاكم *ḥaakim*[1] /n/ **1** /pl *ḥukkaam*/ ruler. **2** /pl *ḥawaakim*/ any of a variety of control or adjust devices (e.g., valve, stabilizer). — /conj/ **3** because, for. *ma-ruḥt*[i]*-ʃ if-fuxl in-nahar-da ḥaakim ʕana ma-nimt*[i]*-ʃ kiwayyis* I didn't go to work today because I hadn't slept well. *kallim-ni b-zooq ḥaakim ʕana m-agii-ʃ bil-ʕafya* speak to me politely - brusqueness doesn't work on me.

حكمة *ḥikma* /n/ **1** wisdom. ‖ *ḥikmit-ak ya rabb* ≈ Lord, your wisdom is too deep for man to understand (said in the face of an incomprehensible event). - *di ḥikmit rabb-i-na* (such is our Lord's wisdom) it's beyond our comprehension, but this is the way things are. - *ʕamma ḥikam* how very strange! **2** /pl *ḥikam*/ maxim, adage.

حكم *ḥakam*[3] /n/ **1** /pl *ḥukkaam*/ referee, umpire, arbiter, judge. ‖ *xaṣm*[i] *w-ḥakam [prov]* opponent and judge (at one and the same time). **2** /no pl/ Righteous Judge (epithet of God).

حكمة *ḥakama* /n pl *-aat*/ **1** thick pad placed under the yoke of a draught animal to prevent chafing. **2** bit (of a bridle).

حكومة *ḥukuuma* /n pl *-aat*/ **1** government. ‖ *bil-ḥukuuma* by force, as in *miʃ xaarig wala bil-ḥukuuma* nothing will force me to go out. - *raaḥ yiḥaasib il-ḥukuuma [slang]* he went to the lavatory. **2** *ʕil-ḥukuuma [slang]* the wife, the missus.

حكومى *ḥukuumi* /adj */ governmental. *ʕil-gihaat il-ḥukumiyya* government bodies.

حكيم *ḥakiim* /pl *ḥukama*/ **1** /n/ physician, doctor. **2** /adj/ wise, sensible, prudent. *xad il-ʕalqa lli mwaṣṣi ʕaleeha l-ḥakiim* he got the beating a wise man would prescribe for the likes of him (i.e. the beating he deserves). — /no pl/ **3** /n/ the All-wise (epithet of God).

حكيمة *ḥakiima* /n pl *-aat*/ **1** woman doctor. **2** qualified nurse or midwife.

محكمة *maḥkama* **1** /n pl *maḥaakim*/ court of law. **2** /interj/ *[leg]* court in session! (call by court usher to announce that the court is convened).

اتحكم *ʕitḥakam* /vi/ **1** to be ruled, be governed. **2** to be controlled, be regulated. **3** to be held tightly in position, be gripped. **4** to be refereed. **5** to be passed (of a sentence). - iva *mitḥikim*.

حكّم *ḥakkim* **1** /vt/ to appoint as judge or arbitrator. *law ḥakkimuu-ni ʕala s-sitt*[i] *di la-ʕaglid-ha fil-midaan* if they put me in judgement over that lady I'd have her flogged in the square! *hay ʕit taḥkiim* committee of arbiters. *kaan laazim ʕaḥakkim ʕaql-i* I should have used my head. ‖ *ḥakkim raʕy-(u)* he insisted. **2** to put in control. *rabb-i-na ma-yḥakkim-ak ʕala walaaya [women in trad soc]* may God never put you in charge of a helpless woman! **3** to insist on. *ḥakkimt innaha tinzil mil-beet is-saaʕa talaata ṣ-ṣubḥ* I insisted on her leaving the house at three in the morning. — /vi/ **4** to referee. *miin ḥa-yḥakkim fil-matʃ* who will referee the match? **5** to fix tightly, seal well. *ḥakkim ʕala l-ḥanafiyya* turn the tap off tightly. - vn *taḥkiim*; ava/pva *miḥakkim*.

اتحكّم *ʕitḥakkim* /vi/ **1** to be placed in judgement. *ʕitḥakkim ʕalayya lli yiswa wi-lli ma-yiswaaʃ* every Tom, Dick and Harry was allowed to do whatever he liked with me. **2** to become determined, insist. *ʕitḥakkim ʕas-safar in-nahar-da* he insisted on travelling today. -vn *taḥakkum*; ava/iva *mitḥakkim*.

¶ *ʕitḥakkim fi-* to keep under control. *tiqdar titḥakkim fil-maxraṭa zayy*[i] *ma-nta ʕaayiz* you can control the lathe in any way you like. *bi-titḥakkim fiyya kida leeh* why are you trying to keep me under your thumb.

حاكم *ħaakim*[2] /vt/ to try, take to court. *ħa-nħaakim il-muhandis illi rakkib il-kablaat ʁalaṭ* we're going to prosecute the engineer who installed the cables wrongly. - vn *miħakma*; ava *miħaakim*.

محاكمة *muħakma* /n pl *-aat*/ trial.

اتحاكم *ʔitħaakim* /vi/ to be tried, be taken to court. - iva *mitħaakim*.

محكم *muḥkam* /adj/ sealed, tightly closed.

احتكم *ʔiḥtakam* /vi/ to gain possession. *ʔaah law ʔaḥtikim ʕala ʔalf*[i] *gneeh* ah, if only I could get hold of a thousand pounds! - ava *miḥtikim*.

استحكم *ʔistaḥkim* /vi/ 1↓ to gain possession. *ʔistaḥkim ʕala ʕmarteen* he became the owner of two apartment buildings. 2↑ to take hold, become entrenched. *ʔil-fikra staḥkimit fi-muxx-i* the idea took hold of me. *maʃaakil mustaḥkima* chronic problems. - vn *ʔistiḥkaam*; ava *mistaḥkim, mustaḥkim*.

استحكامات *ʔistiḥkamaat* /pl n/ *[mil]* fortifications.

استحكّم *ʔistiḥakkim*↓ /vi/ to behave tyrannically. - ava *mistiḥakkim*.

ح ك م د –

حكمدار *ħikimdaar* <T *hükümdar*> /n pl *-iyya*/ one with executive authority (e.g., officer in charge of a police station, plane crew, tank crew etc., prefect in a school).

حكمداريّة *ħikimdariyya* /n pl *-aat*/ chief of police's office.

ح ك ى

حكى *ħaka (i)* 1 /vt/ to tell, relate. *ħ-aḥkii-lak ʔizzaay iggawwizt* I'll tell you the story of how I got married. 2 /vi/ to tell stories. *ʁaʕadna niḥki ʕala lli ʃufnaa fil-ħarb* we sat around telling stories about what we saw in the war. - vn *ħaky, ħikaaya*; ava *ħaaki*; pva *maḥki*.

حكاية *ħikaaya* /n/ 1 matter, affair. *ʔil-ħikaaya di zaadit ʕan ħadd-a-ha* this business has gone too far. *ʔeeh ħikayt-u maʕaak* what's his business with you? *ma-xadt*[i]*-ʃ baal-i mil-ħikaaya di* I didn't think of that. *da-nta ħkayt-ak mihabbiba* you're in a terrible fix. *ʔis-sittaat bi-yiʕmilu l-ħikaaya di* women do this sort of thing. ‖ *ʔeeh ħikayt-ak* what's the matter with you? 2 /pl *-aat, ħakaawi*↓/ story, tale. *ʔir-raagil da ʁal-li ħkaaya ʁariiba* that man told me a strange story.

اتحكى *ʔitħaka* /vi/ to be told (of a story). *ħikaaya ʁariiba tħakit ʕannu* a strange tale was told of him. - iva *mitħiki*.

انحكى *ʔinħaka* = *ʔitħaka*. - iva *minħiki*.

حكّى *ħakka*[2] 1 /vt/ to tell (s.o.) stories, entertain (s.o.) with tales, the news etc. *ħakkii-na ʃwayya* come and chat with us and tell us what's been going on. 2 /vi/ to chat. *ʁaʕdiin niħakki maʕa baʕḍ* we're chatting to one another. - vn *taħkiyya*; ava *miħakki*.

[1] ح ل ب

حلب *ħalab (i)* 1 /vt/ to milk. *niʁuul ṭoor yiʁuulu ʔiħlibuu [prov]* (we say it's a bull, they say milk it) we're talking at cross purposes. ‖ *tiʁul-ʃ*[i] *b-yiħlibuu* you'd say they keep him to milk him (from the way they take such good care of him). - *ħalb in-nuguum [magic]* a ceremony performed to gain or regain love. 2 /vi/ to give milk, produce milk. *ʔil-baʁara b-tiħlib kitiir* the cow gives a lot of milk. - vn *ħalb, ħilaaba, ħaliib*; ava *ħaalib*; pva *maḥluub*.

حليب *ħaliib* /n/ milk. - /adjectivally/ *laban ħaliib* (fresh) milk.

حليبة *ħaliiba: ʁaṭaʕ il-ħaliiba wir-rayba* (to cut off the fresh milk and the curdled) to cut off all help, as in *ʔil-ħukuuma ʁaṭaʕit l-ħaliiba wir-rayba* the government has left us completely in the lurch.

محلب *maḥlab* /n/ 1 *[bot]* mahaleb (Prunus mahaleb). 2 a sort of crisp round bread or biscuit made with mahaleb.

محلبة *maḥlaba* /n pl *maḥaalib*/ earthenware crock (see Pl.A, 3).

محلبيّة *maḥlabiyya* /n/ oil of mahaleb (used in cosmetics).

اتحلب *ʔitħalab* /vi/ to be milked. - iva *mitħilib*.

استحلب *ʔistaḥlib* /vt/ to suck (e.g., pastilles). - vn *ʔistiḥlaab*; ava *mistaḥlib*; pva *mustaḥlab*.

مستحلب *mustaḥlab* /n pl *-aat*/ *[chem]* emulsion.

[2] (ح ل ب)

حلبة *ħalba* /n pl *ħalbaat*/ ring, arena. *ħalbit mulakma* boxing ring. *ħalbit raqṣ* dance floor.

حلبة *ħilba* /n/ 1 fenugreek. 2 an infusion of fenugreek.

ح ل ب س س

حلبسّة *ħalabissa* (also *fuxl il-ħalabissa*) /n/ rascally and devious behaviour, hanky-panky.

ح ل ج

حلج *ħalag (i)* /vt/ to gin (cotton). *wabuur ħaliig* ginning mill. - vn *ħalg, ħilaaga, ħaliig*; ava *ħaalig*; pva *maḥluug*.

حلاجة *ħilaaga* /n/ cotton-ginner's trade.

حليج *ħaliig* /n/ ginned cotton.

محلج *maḥlag* /n pl *maḥaalig*/ ginning mill.

اتحلج *ʔitħalag* /vi/ to be ginned. - iva *mitħilig*.

انحلج *ʔinħalag* = *ʔitħalag*. - iva *minħilig*.

ح ل ح ل
حلحل *ḥalḥil* /vt/ to budge. *saʕteen ʕala ma ḥalḥiluu min maṭraḥ-u* (it took) two hours for them to move it from its place. - vn *ḥalḥala*; ava/pva *miḥalḥal*.
اتحلحل *ʔitḥalḥil* /vi/ to be budged. - iva *mitḥalḥal*.

ح ل ز ن
حلزون *ḥalazoon* /n/ spiral.
حلزونة *ḥalazoona* /n pl *-aat*/ **1a** *[obsol]* horse-drawn tram or bus. ‖*bitaaʕit il-ḥalazoona* a whore. **1b** *[rur, obsol]* bus. **2a** Archimedes' screw (see Pl.E, 15). **2b** metal scoop wheel (see Pl.E, 22).
حلزوني *ḥalazooni* /adj/ spiral, helical. *tirs*[i] *ḥalazooni* worm gear. *sillim ḥalazooni* a spiral staircase.

ح ل س
حلس *ḥils* /n pl *ʔiḥlaas, ḥilaas*/ *[rur]* saddle blanket of a camel.

[1] ح ل ف
حلف *ḥilif, ḥalaf (i)* /vi/ to swear an oath, gives one's pledge. *ḥilifna niḍrab-ak law futt*[i] *min hina* we have sworn to beat you if you pass this way. *ḥilfit la-tfarraq ʕeef lis-sayyida ḥalaawit nagaat-u* she made a vow to distribute bread (to the poor) for the sake of Sayyida Zaynab to celebrate his rescue. *ḥ-addii-lak ʕalqa tiḥlif biiha ṭuul ʕumr-ak* I'll give you a beating to swear by for the rest of your life! ‖ *ʔin-naas bi-tiḥlif bi-ḥayaat-u* ≈ people have nothing but good to say about him. - *ʔaalu lil-ḥaraami ʔiḥlif - ʔaal gaa-lak il-farag [prov]* ≈ a thief's honour is of little worth. - vn *ḥilfaan*; ava *ḥaalif*. ¶ *ḥilif ʕala* (1) to bind someone by an oath, be insistent (that s.o. do s.th.). *ḥilif ʕala mraat-u ma tuxrug* he swore that his wife should not go out. *ḥilif ʕalayya l-atʁadda maʕaa* he insisted I must have lunch with him. (2) to forswear. *ḥilif ʕala l-ḥaʃiiʃ* he swore off hashish.
حلفان *ḥilfaan* /n pl *-aat*/ oath.
حلف *ḥilf* /n pl *ʔaḥlaaf*↑/ pact, alliance, treaty. *ʔil-ḥilf il-ʔaṭlasi* the North Atlantic Treaty Organization.
محالفة *muḥalfa* /n pl *-aat*/ pact, alliance, treaty.
حلّف *ḥallif* /vt/ **1** to adjure, cause to take an oath. *ḥallifuu-ni b-ʔinni m-atgawwiz-ʃ*[i] *l-ʁaayit ma ʔatimm*[i] *talaata w-ʕiʃriin sana* they made me swear I would not marry until I was twenty-three. **2** to finish off completely, use up utterly. *kifaaya daʕk*[i] *fil-ḥalla - ʔinti ḥa-tḥallifii-ha* that's enough scrubbing at the pan - are you trying to scour it all away! - vn *taḥliif*; ava *miḥallif*.
اتحلّف *ʔitḥallif* /vi/ **1** to be adjured. **2** to resolve to inflict suffering. - ava/iva *mitḥallif*.
اتحالف *ʔitḥaalif* /vi/ to make an alliance. *ʔitḥalfu maʕa baʕḍ*[i] *ḍidd il-ʕaduw* they made an alliance against the enemy. - vn *taḥaaluf*; ava *mitḥaalif*.
استحلف *ʔistaḥlif* **1** /vi/ to resolve to inflict suffering (on s.o.) *da mistaḥlif-li* he's out to get me, he has it in for me. **2**↑ /vt/ to adjure *ʔastaḥlif-ak bi-bn-ak tisaʕid-ni* by (the love you bear) your son, I plead with you to help me. - vn *ʔistiḥlaaf*; ava *mistaḥlif*.
استحلّف *ʔistaḥallif* = *ʔistaḥlif*. - ava *mistaḥallif*.

[2] ح ل ف
حلفة، حلفاء *ḥalfa* /n/ *[bot]* alfa esparto, halfa grass. ‖*xud bi-ḥaqq-ak ḥalfa wi-ḥraq-u [prov]* (exercise your full rights, even if you're only entitled to *ḥalfa* which you will then burn) don't give up anything you have a right to even if it is completely worthless.
حلفاية *ḥalfaaya* /unit n, pl *-aat*/ a blade of halfa grass.

[3] ح ل ف see ح ل ل و ف: *ḥalluuf, ḥalluufa*

[1] ح ل ق
حلق *ḥalaq*[1] *(a)* **1** /vt/ **1a** to shave (beard, head), cut (hair). *ʔiḥlaq-li daqn*[i] *w-faʕr* give me a shave and haircut. *ḥalaquu-li raas-i* they shaved my head. *maʕguun ḥilaaqa* shaving cream. *makanit ḥilaaqa* razor. ‖*muluxiyya maḥluuqa* coarse-chopped *muluxiyya*. **1b** to strip (a screw thread). **2** /vi/ **2a** to have a shave or haircut. **2b** to strip, be stripped (of a screw thread). - vn *ḥalq, ḥilaaqa*; ava *ḥaaliq*; pva *maḥluuq*.
حلقة *ḥalqa* /inst n, pl *-aat*/ a shave, a haircut. ‖*ḥalqa ngiliizi* a crewcut.
حليق *ḥaliiq*↑ /adj/ shaven. *ḥaliiq id-daqn* clean-shaven. *raagil ḥaliiq id-daqn* a clean-shaven man.
حلّاق *ḥallaaq* /n */ barber, men's hairdresser. *ḥallaaq iṣ-ṣiḥḥa [rur, obsol]* barber-surgeon.
اتحلق *ʔitḥalaq* /vi/ **1** to be barbered, be shaved. **2** to be stripped (of a screwthread). - iva *mitḥiliq*.

[2] ح ل ق
حلق *ḥalq* /n pl *ḥuluuq, ḥulûqa*/ **1** throat. **2** frame (of a door, window etc.). **3** neck (of, e.g., a bottle).
حلق *ḥalaq*[2] /n/ **1** /coll/ ring(s), circle(s). *ḥalaq sataayir* curtain rings. **2** /pl *ḥilqaan, ḥulqaan*/ pair of earrings. *fardit ḥalaq* an earring. ‖*yiddi l-ḥalaq li-lli bala wdaan [prov]* (He gives earrings to those who have no ears) ≈ the best goes to those least equipped to appreciate it.
حلقة *ḥalaqa* /n pl *-aat, ḥalqaat, ḥulqaan*/ **1** /unit n/ a ring, a circle. *ḥalaqit mafatiiḥ* key ring. *qaʕʕad-na ḥalaqa ʕal-ḥaṣiira* he sat us in a circle on the mat. ‖*ḥalaqit mulakma* boxing ring. - *ḥalaqit zikr* a Sufi

gathering for chanting the name of God. **2** section in a market devoted to selling a particular commodity. *ḥalaqit il-xuḍaar* market area where vegetables are sold. **3** episode (in, e.g., a television or radio serial). ‖ *ʕala ḥalqaat* (1) in instalments, bit by bit. (2) from time to time, as in *bi-yṣuumu ʕala ḥalqaat [joc]* they fast sporadically.

حلقي *ḥalaqi* /adj/ ring-shaped, circular.

حلقيّة *ḥalaqiyya* /n/ surrounding circle. *ḍarabu ḥalaqiyya ḥawalee* they encircled him.

حلّق *ḥallaq* /vi/ **1** to move about so as to block routes of escape. *ḥallaq ḥuuf* cut him off and catch him! (cry after a thief or escaped animal). *ḥallaqu ʕalayya w-ḍarabuuni* they cornered me and beat me. *ḥallaq ʕalayya fikkalaam* he tried to stop me making my point. **2**↑ to circle in the air. - vn *taḥliiq*; ava *miḥallaq*.

اتحلّق *ʔitḥallaq* /vi/ **1** to set in a ring-shape. **2** impersonal passive of *ḥallaq* 1. *ʔitḥallaq ʕalayya* I was cornered. - ava/iva *mitḥallaq*.

ح ل ق م

حلقوم *ḥalquum* /n pl *ḥalaqiim*/ throat, gullet.

ح ل ل ¹

حلّ *ḥall¹ (i)* /vt/ **1** to undo, untie. *bi-yḥill iṣ-ṣamuula* he unscrews the nut. *ḥall il-ʕuqda* he untied the knot. ‖ *yiḥill¹ w-yurbuṭ* to exercise effective power, get things done (usually in negative contexts), as in *la yḥill¹ wala yurbuṭ* he's ineffective. - *miʃi ʕala ḥall¹ ʃaɣr-u* to do as one likes with no regard for convention. - *ḥill-i-ni lamma ...* ≈ it's bound to take a long time for ..., as in *ḥill-i-ni lamma yirgaɛ* ≈ it will be ages before he comes back. **2** to solve. *muʃkila ma-yḥill¹-haa-ʃ ʔilla rabb-i-na* a problem only our Lord can solve, a very tough problem. **3** to dissolve. *ḥall¹ ʃwayyit ʕambar fil-qahwa* he dissolved a little ambergris in the coffee. **4** to disperse, break up. *ḥallu g-gamɛiyya* they dissolved the association. **5** *[Chr]* **5a** to absolve of sin. *ḥill-i-ni ya-buu-na* give me absolution, Father. *rabb-i-na yḥill-ak* God grant you remission of your sins. **5b** to grant sanction to (s.o., of a priest). — /vi/ **6** to dissolve. *ʔis-sukkar ḥall¹ fil-mayya* the sugar dissolved in the water. ‖ *ʔil-alwaan ḥallit* the colour ran. **7** to become loose, come undone. *ʔiṣ-ṣawamiil ḥallit maɛa surɛit il-mutoor* the bolts worked loose with the speed of the motor. ‖ *ʔaɛṣaab-i ḥallit* my nerves are in shreds. - *ḥill² ɛanni* leave me alone! **8** to come into or upon (s.o. or s.th.). *ḥallit ir-rooḥ fi-gasad-u* he revived. *ḥuluul ir-rooḥ il-qudus [Chr]* (1) the descent of the Holy Spirit. (2) epiclesis. *ʔil-maṣaayib illi ḥallit ɛaleena* the disasters that befell us. - vn *ḥalalaan, ḥuluul, ḥall*; ava *ḥaalil*; pva *maḥluul*. ¶ *ḥall¹ maḥall* (or *makaan-*) to take the place of. *miin ḥa-yḥill¹ makaan-ak lamma tkuun fi-ʔagaaza* who'll take your place when you're on holiday?

حلّ *ḥall²* /n pl *-ḥuluul*/ solution. *muʃkila ma-lhaa-ʃ ḥall* an insoluble problem.

محلول *maḥluul* **1** /n pl *-aat, maḥaliil/ [chem]* solution. **2** /adj */ sexually impotent.

حلّة *ḥalla¹* /n pl *-aat* **1** instance noun of *ḥall²*. **2** = *ḥall²*. — /pl *ḥilal*/ **3** metal cooking-pot. ‖ *ḥallit furn* or *ḥallit keek* cooking-pot constructed to produce results comparable with those of oven cookery. - *ḥalla ʔumm² ṣuffaara*↓ or *ḥalla bristu* or *ḥallit buxaar* pressure cooker. - *ʔil-ḥikaaya di ḥalla w-huwwa mayrafit-ha* ≈ he knows everything about his matter. - *ḥalla w-laqeet ɣaṭaa-ha* I found just what I was looking for. - *ḥallit l-ittifaaq* food eaten by a couple on their wedding-night.

حلّ *ḥill* /n/ *[Chr]* **1** (declaration of) absolution. *laazim taaxud ḥill¹ qabl it-tanaawul* you must receive absolution before communion. **2** sanction, privilege. *ʔil-qassiis bi-yiddi ḥill¹ lil-ɛayyaan ɛafaan ma-yṣum-ʃ* the priest gives a sick man permission not to fast. *xadt¹ ḥill² ɛafaan ʔadbaḥ* I obtained (from a priest) permission to slaughter (animals for food).

¶ *fi-ḥill* free to act, having a free hand. *ʔana miʃ fi-ḥill inni ʔaqul-lak* I am not at liberty to tell you.

حلّة *ḥilla* /n/ metal conduit leading from a water-wheel to a ditch.

حلال *ḥalaal* /n/ what is allowed by the precepts of Islam. ‖ *ʔibn* (or *bint²*) *ḥalaal* nice person, decent sort, as in *wilaad il-ḥalaal ʔilli faafu d-duxxaan ballaɣu l-maṭaafi* the good folk who saw the smoke called the fire-brigade. - *ʔibn* (or *bint*) *il-ḥalaal* ≈ Mr (or Miss) Right, as in *miʃ ḥ-atgawwiz ʔilla lamma ʔalaaqi bint il-ḥalaal* I shan't marry till I find Miss Right. - *filuus ḥalaal* honestly-gotten gains (which are always expected to be fruitful), as in *ʔilli fluus-u ḥalaal yiftiri minni [vendor's cry]* ≈ you'll never go wrong if you buy from me! - *ḥalaal-i balaal-i* or *ḥalaal-i zalaal-i* it is my own to enjoy. - /adjectivally/ *ʔil-filuus il-ḥalaal ma-tḍiɛ-ʃ* honestly-earned money will never be lost.

حليلة *ḥileela*↓*: ya ḥleela [women]* /interj/ how nice! how wonderful!

حلّال *ḥallaal* /n */ solver (of problems), untier (of knots). *ḥallaal maʃaakil* or *ḥallaal ɛuqad* a solver of problems, one who gets things put right. *kull¹ ɛuqda w-liiha ḥallaal* ≈ there's always someone who can sort things out (no matter how complicated a situation may be).

محلّ *maḥall* /n pl *-aat*/ **1** shop, store, place of business.

maḥall alfⁱ ṣanf emporium. *maḥallⁱ ngaara* carpenter's shop. *ʕil-maḥallaat ʠafla g-gumʕa* the shops are closed on Fridays. **2** place. *ʕuʠʕud maḥall-ak* sit where you are. *bi-yustaʕmal maḥall-u* it is used in its place. ‖*kalaam-ak fi-maḥall-u* ≈ how right you are! *-fi-ɣeer maḥall-(u)* inappropriately, unnecessarily, as in *wala ṣaraftⁱ ʠirfⁱ f-ɣeer maḥall-u* I haven't wasted a single piastre. **3** (also *maḥall il-ʕadab*) *[euphem]* lavatory, w.c.

محلّي *maḥalli* /adj/ local, locally-made. *ʕil-istihlaak il-maḥalli* local consumption.

اتحلّ *ʕitḥall* /vi/ **1** to be undone, be untied. **2** to be solved. **3** to be dissolved. **4** to become sexually impotent. - ava/iva *mitḥall*.

انحلّ *ʕinḥall* = *ʕitḥall*. - ava/iva *minḥall*.

حلّل *ḥallil* /vt/ **1** to analyse. *ḥallilu l-ʠayyina fil-maʕmal* they analysed the sample in the lab. **2** *[Isl]* **2a** to declare to be *ḥalaal* (q.v.). **2b** to slaughter (an animal at the point of death) so as to make the eating of its flesh ritually permissible. - vn *taḥliil*; ava *miḥallil*.

تحليل *taḥliil* /n/ **1** /pl *-aat, taḥaliil*/ analysis. **2** /pl *taḥaliil* only/ *[Chr]* absolution.

محلّل *muḥallil* /n */ *[Isl law, obsol]* intermediate husband employed to enable a man to remarry a woman he has divorced with the threefold repudiation.

اتحلّل *ʕitḥallil* /vi/ passive of *ḥallil*. - vn *taḥallul*; iva *mitḥallil*.

احتلّ *ʕiḥtall* /vt/ to occupy (territory) by force. - vn *ʕiḥtilaal*; ava *miḥtall*; pva *muḥtall*.

احتلال *ʕiḥtilaal* /n/ military occupation (of an area).

محتلّ *muḥtall* /n */ occupier, invader.

استحلّ *ʕistaḥall* /vt/ to consider *ḥalaal* (q.v.), consider fair game. *yistaḥallⁱ maal in-nabi* he would swindle the Prophet himself. - ava *mistiḥill*.

ح ل ل ²

حلال *ḥalaal* /n pl *ʕiḥlaal*/ penis.

إحليل *ʕiḥliil* /n pl *ʕiḥlaal, ʕaḥaliil*/ penis.

ح ل ل و ف

حلّوف *ḥalluuf* /n pl *ḥalaliif*/ **1** boar, pig. **2** *[fig]* fat, dirty or base person.

حلّوفة *ḥalluufa* /n pl *-aat*/ **1** sow. **2** *[rur]* any of various types of metal scoop wheel used in irrigation (see Pl.E, 22).

ح ل م ¹

حلم *ḥilim¹ (a)* /vi/ to dream. *ʧuul ʕumr-i b-aḥlam bi-kida* all my life I've dreamed of that. - vn *ḥilm*; ava *ḥaalim, ḥalmaan*.

حلم *ḥilm¹* /n pl *ʕaḥlaam*/ dream. *tafsiir il-ʕaḥlaam* interpretation of dreams. *ḥilm ibliis fig-ganna [prov]* (Satan's dream of Paradise) a total impossibility. *ḥilmⁱ w-itfassar* a dream come true.

استحلم *ʕistaḥlim* /vi/ to have wet dreams. - vn *ʕistiḥlaam*; ava *mistaḥlim*.

ح ل م ²

حلم *ḥilim² (a)* /vi/ to behave with patience and restraint. *laazim tiḥlam ʕala wlaad-ak* you should go easy with your children. - vn *ḥilm*; ava *ḥaalim, ḥalmaan*.

حلم *ḥilm²* /n/ tolerance. *ʕil-ḥilmⁱ sayyid il-ʕaxlaaʠ [prov]* tolerance is the chief of virtues. *ḥilm-ak ʕalayya* be patient with me! *ḥilm-ak fiwayya* take it easy! don't get het up!

حليم *ḥaliim* **1** /adj pl *ḥulama*/ tolerant, good-natured. **2** /n/ Patient One (i.e. with sinners) (epithet of God).

ح ل م ³

حلمة *ḥalama* /n pl *-aat*/ nipple, teat. ‖*ḥalamit widn* earlobe. - *lamma ʧuuf ḥalamit widn-ak* (when you see your earlobe) ≈ when hell freezes over.

ح ل ن ج

حلنجي *ḥalangi* /n pl *-yya*/ swindler.

ح ل و م

حلوم *ḥaluum* <Copt> /n/ mild white cured cheese, sometimes braided.

ح ل و

حلي *ḥili (a)* /vi/ **1** to be or become attractive, pleasant or enjoyable, gain favour. *baʕdⁱ maʕna xadt iʃ-faʠʠa ḥilyit taani f-ʕeen-u* after I had taken the flat he started to feel it was attractive again. *yiigi ṣṣeef wil-ʠaʕda barra tiḥla* summer comes and sitting in the open becomes pleasant. **2** to become sweet. *ʕiʃ-faay ḥili zyaada ʕan il-luzuum* the tea became over-sweet. - vn *ḥala, ḥalaawa, ḥiliww*; ava *ḥaali*.

حلى *ḥalaˡ (i)* /vt/ **1** to sweeten. *ma-tiḥlii-ʃ iʃ-faay fil-barraad* don't sweeten the tea in the teapot. **2** to cheer, brighten up. *ga ḥala l-ʠaʕda* he came and cheered up the gathering. - vn *ḥalayaan*; ava *ḥaali*; pva *maḥli*.

حلا *ḥala²* /n/ sweetness. *ʕis-sukkar il-mikarrar ḥalaa ʕaʠall* refined sugar is less sweet.

حلاوة *ḥalaawa* /n/ **1** pleasurableness, pleasantness, sweetness. *ya ḥalaawa* how nice! *ya ḥalawit-ha* how sweet she is! *ma-fii-ʃ ḥalaawa min ɣeer naar* and *ʕilli yaakul min ḥalawit-ha yitḥammil mararit-ha [prov]* ≈

there's no pleasure without pain. ‖*ħalawt-ak* well done! -*ħalaawit (ir-)rooħ* (final) burst of energy born of a zest for life, final fling, as in *ʕil-xinaaqa l-ʕaxiira di bass[a] ħalaawit rooħ* the last quarrel is just a final attempt to put up a fight, *ʕil-baṭṭa l-madbuuħa b-tifqal timʃi wi-tfaṭfaṭ min ħalaawit ir-rooħ* a duck that has its throat cut goes on walking and jumping about, so strong is the hold life has on it. **2** present or treat given in celebration. *ħ-aɛaʃʃii-k barra ħalaawit nagaaħ-i* I'll take you out to dinner to celebrate passing my exams. *ma-tinsu-naa-ʃ fil-ħalaawa* don't overlook us when you're treating everyone. **3** any of a variety of sweetmeats or candies. *ħalaawa ṭḥiniyya* halwah. *ħalaawa fuliyya* hard white candy encrusted with peanuts. *ħalaawa ɛalaf* sesame seeds pressed together with caramel. ‖*ħalaawit is-sayyid* sweetmeats and candies made in Tanta for the *muulid* of the saint el-Sayyid el-Badawi. -*ɛaruusa ħalaawa* sugar doll of the sort sold at the *muulid* of any saint. -*kal ɛaql-(u) b-ħalaawa* to dupe (s.o.). -*bi-yitbaaɛ zayy il-ħalaawa* ≈ it sells like hot cakes. **4** depilatory paste made from sugar, water and lemon juice.

حلو *ħilw* **1** /adj */ **1a** sweet (to taste). ‖*zeet ħilw* common cooking oil. -*mayya ħilwa* fresh water. **1b** nice, good. *ħilwa kida* is that O.K.? *kalaam-u ħilw* he speaks well. *waḍḍabt il-baṭaaṭis wil-makaroona w-xallet-hum mil-ħilwiin* I prepared the potatoes and pasta and made them really nice. *wabbaxt-u b-kaam kilma ħilwiin ɛal-haamiʃ* I rebuked him with a few well-chosen words in passing. /adverbially/ *ʃiɤsil-u ħilw* wash it well! ‖*nifs-u ħilwa* he's easy to please. -*ʃil-ħilw[i] ma-yikmal-ʃ [prov]* nothing can be perfect. -**1c** good-looking. *ʃakl-a-ha ħilw* she looks pretty. ‖*wiʃʃ(-u) ħilw[a] ɛala ...* ≈ (he) brings good luck to ..., as in *wiʃʃ il-bint iṣ-ṣuɤayyara ga ħilw[a] ɛala ʃabuu-ha* the newborn girl brought her father good luck. **2** /n/ sweet course (of a meal).

حلية *ħilya* /n pl -*aat*/ decoration, ornament, embellishment.

حلوان *ħilwaan[1]* /n/ **1** remuneration for services rendered. **2** ransom, redemptive price. see further under ح ل و ن

حلوانة *ħilwaana: ħilwaana f-silwaana* see *silwaana*.

حلويّات *ħalawiyyaat* /pl n/ **1** confections, sweetmeats, fancy pastries. **2** neck sweetbreads.

حلوانى *ħalawaani* /n pl -*yya*/ confectioner, maker and seller of sweetmeats and fancy pastries.

أحلى *ʃaħla* /el/ more/most sweet, lovely, pleasant etc. *(ya) m-aħla* how lovely, as in *(ya) m-aħlaa-ha* how lovely she is! *ya m-aħla l-biira f-ɛizz il-ħarr* how lovely to drink beer when the weather's really hot!

حليوة *ħileewa* /adj invar/ goodlooking. *waad ħileewa* a handsome lad.

حلّى *ħalla[2]* /vt/ **1a** to sweeten. *ħalli z-zabaadi b-fiwayyit ɛasal* sweeten the yoghurt with a little honey. *ʃiddii-ni ħittit baqlaawa ʃaħalli biiha buqq-i* give me a piece of baklava to sweeten my mouth. ‖*ħalli buqq-ak bi-ṣalaat in-nabi* sweeten your mouth with the words 'Blessings on the Prophet!' **1b** to make pleasant. *ħalla l-qaɛda* he brightened up the gathering. **2** to eat (s.th.) as a dessert. *baɛd[i] ma nitɤadda ɛayziin niħalli baṭṭiix* after we've eaten we would like water-melon for dessert. **3** to decorate, ornament. *ħallit il-fustaan bi-dantilla* she decorated the dress with lace. -vn *taħliyya*; ava *miħalli*.

اتحلّى *ʃitħalla* /vi/ passive of *ħalla*. -iva *mitħalli*.

احلوّ *ʃiħlaww* /vi/ **1** to be or become sweet (to the taste). *ṭaɛm-u miħliww* it tastes sweetish. **2** to become pretty. *ʃil-ħibla lamma tiħlaww[i] yibqa lli f-baṭn-a-ha bint* when a pregnant woman gets prettier it means she's carrying a girl. **3** to become enjoyable, become pleasant. *ʃid-dinya ħlawwit fi-ɛeen-i* I started to enjoy life. -ava *miħliww*.

احلّى *ʃiħlayy* = *ʃiħlaww*. -ava *miħlayy*.

استحلى *ʃistaħla* /vt/ to consider pleasant, find enjoyable. *ʃistaħleet il-film* I enjoyed the film. -ava *mistaħli*.

ح ل و ا ن

حلوان *ħilwaan[2]* /prop n/ Helwan, a residential and industrial town to the south of Cairo.

حلوانى *ħilwaani* /adj */ from Helwan. *ʃig-giir il-ħilwaani* Helwan limestone.

ح ل و ن see also ح ل و

حلون *ħalwin* **1** /vt/ to sweeten (the mouth, of food). *ħaaga tħalwin il-buqq* something to sweeten your mouth. **2** /vi/ to eat or taste something sweet. ‖*ʃana mħalwin* I fancy eating something sweet. -vn *ħalwana*; ava/pva *miħalwin*.

¶ *ħalwin ɛala* to pay for the return of, redeem, ransom. *ħalwin ɛal-baqara lamma rigɛit* he paid for the return of the (stolen) cow.

ح ل ى see ح ل و

ح ل ى ط

حليط *ħalyaṭ* /vi/ to toady, make up (to s.o.). -vn *ħalyaṭa*.

حلياط *ħilyaaṭ* /n */ toady.

ح م

حم *ħama[1]* /n, in constr *ħamaa-*/ father-in-law.

حماة، حمة *ḥama²* /n, in constr *ḥamaat-*, pl *ḥamawaat*/ mother-in-law. *ʕil-ḥama ɛama [prov]* a mother-in-law is (as hard to bear as) blindness. *ḥamaat-i mnaqra qaal ṭallaq bint-a-ha [prov]* (he said) 'My mother-in-law's a plague!' Someone told him, 'Divorce her daughter!' (of one who complains of a situation whose solution is in his own hands). ‖*ḥamaat-ak bi-tḥibb-ak* you've come at the right time (to one who arrives when food is being served).

ح م ب ط see ح ن ب ط: *ḥambuuṭ, ḥambaṭ*

ح م ح ر
حمحر *ḥamḥar* /vi/ to set one's sights (on s.th.). *bi-yḥamḥar ɛak-kitaab da* he is out to get that book by any means. - vn *ḥamḥara*; ava *miḥamḥar*.

ح م ح م
حمحم *ḥamḥam* /vi/ **1** to flutter the wings (especially of a pigeon). **2a** to puff itself up, prance, strut etc., prior to mating (of animals and birds). **2b** to become sexually aroused. - vn *ḥamḥama*; ava *miḥamḥam*.
¶ *ḥamḥam ɛala* to give protective care to (s.o.). *ḥamḥam ɛala l-ɛiyaal wi-faaf maṣaliḥ-hum* he cared for the children and looked after their interests.

ح م د
حمد *ḥamad (i)* /vi/ to praise, give thanks to (God). *ɛala l-ɛumuum il-waaḥid yiḥmid rabb-i-na* ≈ anyway, one isn't too badly off. ‖*ʕiḥmid rabb-i-na* ≈ count your blessings! - vn *ḥamd*; ava *ḥaamid*; pva *maḥmuud*.
حمد *ḥamd* /n/ praise. *ʕil-ḥamdu li-llaah* praise be to God! (used (1) in reply to any enquiry after one's well-being. (2) as a grace after eating. (3) as an expression of relief or satisfaction). *ḥamd illa ɛas-salaama* praise be to God for (your) safety! (said (1) to one arriving at the end of a journey. (2) to one who has just recovered from an illness. (3) to a woman who has just given birth).
أحمد *ʕaḥmad* /prop n/ male given name. ‖*ʕabu ʕaḥmad* ≈ big shot.
أحمدات *ʕaḥmadaat: ʕabu ʕaḥmadaat [obsol]* green tarbush with a white tassel, formerly worn by the Alexandrian *miɛallim*, hence such expressions as *laabis ʕabu ʕaḥmadaat* dressed like an Alexandrian, *miɛallim ɛamil-li ʕabu ʕaḥmadaat* trying to lord it over me (in the manner attributed to Alexandrian *miɛallimiin*).
أحمدى *ʕaḥmadi: ʕil-busaaṭ ʕaḥmadi* welcome! there's room for everyone and anyone. *xalli l-busaaṭ ʕaḥmadi* let's keep things friendly!
حميد *ḥamiid* /n/ Praiseworthy One (epithet of God).
حميدى *ḥamiidi* /adj/ *[path]* benign. *waram ḥamiidi* a benign tumour.

ح م ر ¹
أحمر *ʕaḥmar¹* /adj, fem *ḥamra*, pl *ḥumr*/ red, reddish-brown. ‖*ʕaḥmar ʕingiliizi* fire-engine red. - *ʕaḥmar ʃafaayif* lipstick. - *ḥuṣaan ʕaḥmar* a bay horse. - *ṭuub ʕaḥmar* fired bricks. - *laḥma ḥamra* lean meat. - *naḥaas ʕaḥmar* copper. - *ʕabu kaɛb aḥmar* a baby. - *ʕig-ginn il-ʕaḥmar* the most powerful of the jinn. - *wala g-ginn il-ʕaḥmar yiqdar yigiib-u* ≈ nothing on earth could make him come, it is impossible to make him come. - *warra(a) l-ɛeen il-ḥamra* to be intimidatingly severe (toward s.o.), as in *ʔis-sikirteera tɛawwidit ɛala qillit il-ʕadab bass il-mudiir ig-gidiid warraa-ha l-ɛeen il-ḥamra* the secretary had habitually been very rude, but the new director let her know what he thought of that!
أحمرانى *ʕaḥmaraani* /adj/ reddish.
حمرة *ḥumra* /n/ **1** *[path]* erysipelas, St. Anthony's fire. **2** /coll/ broken bricks.
حمار *ḥamaar* /n/ redness, reddish-browness, ruddiness. ‖*ḥamaar wi-ḥalaawa ya baṭṭiix* water-melon vendor's cry ≈ it looks good and tastes good!
محمور *maḥmuur* /adj/ afflicted with laminitis (of a horse).
حمّر *ḥammar* /vt/ **1** *[cook]* to fry (particularly in *samn*). *baṭaaṭis miḥammara* potato chips, French fries. **2** to make red. *bi-yḥammar il-ɛeen* it makes the eye inflamed. ‖*ḥammar-lu qafaa* give him a slapping on the back of the neck! - *ḥammar-lu ɛeen-ak* be very strict with him, show him you won't put up with any nonsense! - vn *taḥmiir*; ava/pva *miḥammar*.
اتحمّر *ʔitḥammar* /vi/ *[cook]* to be fried (particularly in *samn*). - iva *mitḥammar*.
احمرّ *ʔiḥmarr* /vi/ to burn red, turn reddish-brown. *ʔil-fustaan iḥmarr¹ mis-sabɣa* the dress turned red from the dye. *ʔil-balaḥ iḥmarr* the dates (ripened and) turned red. *wiff-i ḥmarr* I blushed. *ʔiḥmarreet qawi fi-skindiriyya* you got very sunburned in Alexandria. - vn *ʔiḥmiraar*; ava *miḥmirr*.
استحمر *ʔistaḥmar¹* /vt/ **1** to consider red. **2** to select for redness. - ava *mistaḥmar*.

ح م ر ²
حمار *ḥumaar* /n pl *ḥimiir*/ **1** male donkey, jackass. ‖*xallaa-ha baṭn¹ ḥmaar [prov]* ≈ he added insult to injury. - *ʔeef ɛarraf il-ḥimiir bi-ʕakl ig-ganzabiil [prov]* (what taught donkeys to eat ginger?) ≈ what's the point

of throwing pearls before swine? - *muut ya ḥmaar ɛala ma ygii-lak il-ɛaliiq [prov]* (you will be a dead donkey before the fodder comes) you have a long wait ahead of you. - *sikitnaa-lu daxal bi-ḥmaar-u* ≈ we gave him an inch and he took a mile. - *ḥumaar waḥfi* or *ḥumaar mixaṭṭaṭ* zebra. - *ḥumaar fuxl* grind, swot. - *xulub* (or *xilib) ḥumaar-i* I give up, I'm stumped. **2** fool, dolt. **3** any of a variety of supporting devices (e.g., trestle, jack).

حمارة *ḥumaara* /n pl *ḥimiir*/ female donkey. ‖ *ḥumart-ak il-ɛarga wala suʃaal il-laʃiim [prov]* better make do with your lame donkey than go to the wicked for help.

أحمر *ʃaḥmar*[2] /el/ more/most stupid.

حمّار *ḥammaar* **1** /n * and pl *ḥammaara/ [obsol]* donkey driver. **2** /adj */ mannerless, vulgar.

حمّاري *ḥammaari: rikib ḥammaari* to ride astride.

حميري *ḥimmiiri, ḥimmeeri, ḥummeeri: rikib ḥimmiiri* (etc.) to ride astride.

استحمر *ʃistaḥmar*[2] **1** /vt/ to consider stupid. **2** /vi/ to behave stupidly. - ava/pva *mistaḥmar*.

ح م ر ق

حمرق *ḥamraq* /vi/ to be difficult, be unco-operative, be evasive, stall. - vn *ḥamraqa*; ava *miḥamraq*.

اتحمرق *ʃitḥamraq* = *ḥamraq*. - ava *mitḥamraq*.

استحمرق *ʃistiḥamraq*[1] = *ḥamraq*. - ava *mistiḥamraq*.

ح م س

حماس *ḥamaas* /n/ enthusiasm, fervour, zeal.

حماسة *ḥamaasa* = *ḥamaas*. *balaaf ḥamaasa* don't be so rash!

حمّس *ḥammis* /vt/ to inspire with enthusiasm. - vn *taḥmiis*; ava *miḥammis*.

اتحمّس *ʃitḥammis* /vi/ to become enthusiastic. - vn *taḥammus*; ava *mitḥammis, mutaḥammis*.

ح م ش

حمش *ḥamaf (i)* /vt/ to scorch, burn. - vn *ḥamf*; ava *ḥaamif*; pva *maḥmuuf*.

حمشة *ḥamfa* /inst n, pl *-aat*/ a scorching.

حمش *ḥimif* /adj */ **1** tough-minded, virile. *goz-ha ḥimif mimaffii-ha ɛal-ɛagiin ma-tlaxbaṭ-uu-f* her husband is a real man; he really makes her behave herself. **2** crisply roasted. *ḥimif wi-laziiz ya maqli [vendor's cry]* crisp roasted peanuts!

اتحمش *ʃitḥamaf* /vi/ to be scorched, be burnt. - iva *mitḥimif*.

انحمش *ʃinḥamaf* = *ʃitḥamaf*. - iva *minḥimif*.

ح م ص

حمص *ḥummuṣ* /coll n/ chick-pea(s). *salaṭit ḥummuṣ* a dip of ground chick-pea, sesame seed, garlic and lemon. *ḥummuṣ if-faam* hot, spicy drink made with whole chick-peas. ‖ *ṭiliɛ mil-muulid bala ḥummuṣ [prov]* he left the fair without any chick-peas (of one who gets nothing out of an affair from which he might expect to profit).

حمّصة *ḥummuṣa* /n pl *-aat*/ **1** /unit n/ a chick-pea. ‖ *ɛamal ḥummuṣa* to apply a chick-pea to a boil or the like to draw out the pus. **2** cloaca (of a chicken). **3** *[rur]* pond in a field (for drainage).

حمّصيّة *ḥummuṣiyya* (also *ḥalaawa ḥummuṣiyya*) /n/ hard white candy studded with dried chick-peas.

حمّصاني *ḥummuṣaani: zaraayir ḥummuṣaani* buttons made of knotted thread.

محمص *maḥmaṣ* /n pl *-aat, maḥaamiṣ*/ oven for roasting coffee beans, peanuts and seeds.

محمصة *maḥmaṣa* = *maḥmaṣ*.

حمّص *ḥammaṣ* /vt/ **1** to parch (seeds or grain). *bi-nḥammaṣ id-dura qabl*[i] *ma nixzin-ha* we parch the maize before storing it. *bi-yḥammaṣ is-sudaani* he roasts the peanuts. ‖ *ɛeef miḥammaṣ* crisp dried bread. **2** *[phys]* to superheat. - vn *taḥmiiṣ*; ava/pva *miḥammaṣ*.

اتحمّص *ʃitḥammaṣ* /vi/ **1** to be dried by heat (of food). **2** to become crisp or brittle. *ʃik-kawitf*[i] *qidim wi-tḥammaṣ* the rubber got old and brittle. **3** *[phys]* to be superheated. - iva *mitḥammaṣ*.

ح م ض

حمض *ḥimiḍ* or *ḥumuḍ (a)* /vi/ to go bad (of cooked food or fruit), go sour (of milk). - vn *ḥamaḍaan*; ava *ḥaamiḍ, ḥamḍaan*.

حامض *ḥaamiḍ* /n pl *ʃaḥmaaḍ, ḥawaamiḍ*/ acid.

حمض *ḥimḍ* = *ḥaamiḍ*.

حموضة *ḥumuuḍa* /n/ acidity (of the stomach).

حموضيّة *ḥumuḍiyya* /n/ spoilage (of food), sourness (of milk that has gone off).

حمّاض *ḥummaaḍ* /n/ *[bot]* sorrel.

حمّض *ḥammaḍ* /vt/ **1** *[phot]* to develop (film). **2** to cause (milk) to go sour or (food) to go bad. ‖ *ma-tḥammaḍ-uu-f [women in trad soc]* don't go too far! - vn *taḥmiiḍ*; ava/pva *miḥammaḍ*.

اتحمّض *ʃitḥammaḍ* /vi/ *[phot]* to be developed (of film). - iva *mitḥammaḍ*.

احمضّ *ʃiḥmaḍḍ* = *ḥimiḍ*. - ava *miḥmiḍḍ*.

ح م ق

حمقة *ḥamqa* /n/ (bad) temper, ill-humour, pique.

حمقان *ḥamqaan* /adj */ overwrought, in a state.
حمق *ḥumqˀ* /n/ foolishness, folly.
حمقى *ḥimaqi* /adj pl *-yya*/ quick to take offence, peevish, touchy.
أحمق *ʔaḥmaqˀ* /adj, fem *ḥamqa*, pl *ḥumq*/ foolish, silly.
محموق *maḥmuuq* /adj */ in a state, wrought up. *ʔawwil ma simiʕ il-xabar raaḥ maḥmuuq bil-ʕiyaaṭ* as soon as he heard the news he burst into tears.
اتحمق *ʔitḥamaq* /vi/ to become worked up, get into a state. *lamma ʏiliṭ itḥamaq ʕalayya* when he made a mistake, he lost his temper with me. -ava *miṭḥimiq*.
انحمق *ʔinḥamaq* = *ʔitḥamaq*. -ava *minḥimiq*.

ح م ل [1]

حمل *ḥamal*[1] *(i)* /vt/ **1** to carry (especially a person). *ḥamalit ibn-a-ha w-miʃyit* she picked up her son and left. *ḥamal ḥamm* to be laden with care. *ḥamalit hamm-i* she bore my burdens, she concerned herself with my troubles. *ma-tiḥmil-ʃ*[i] *hamm* don't worry! **2** to put up with, tolerate. *ma-yiḥmil-ʃ aktar min kida* it can't take any more than that. — /vi/ **3** to become pregnant. *hiyya ḥamalit minnu* she became pregnant by him. -vn *ḥimlaan, ḥamalaan, ḥaml*; ava *ḥaamil*; pva *maḥmuul*. ¶ *ḥamal ʕala* to attack (particularly verbally). -*ḥamal min* to be offended by (s.o. or s.th.).
حامل *ḥaamil* /pl *ḥawaamil*/ **1** /adj/ pregnant. **2**ˆ /n/ stand, support. *ḥaamil garaayid* newspaper stand.
حملة *ḥamla* /n pl *-aat*/ **1** campaign. **2** load, burden, care. *ʔil-ʕiyaal ḥamla* children are a burden. *rabb-i-na yxaffif ḥamlit-ak* may God lighten your troubles!
حمل *ḥiml* /n/ **1** /pl *ḥumuul, ʔaḥmaal*/ load, burden. *xalli tawakkul-ak ʕal-allah wi-rmi l-ḥiml*[a] *ʕal-baaqi [prov]* put your trust in God and cast your load on the Everlasting (or, as a pun: on others). *ʔil-ḥiml*[i] *btaaʕ il-mutoor* the (electric) load on the motor. ‖ *ḥiml-u xafiif* his family responsibilities are few. -*ʔana miʃ ḥiml-ak* you're too heavy (or: too much) for me. **2** /pl *ḥimlaan*/ coarse woollen blanket.
حملي *ḥimali* /adj/ long-suffering, stoic.
حمول *ḥamuul* /adj */ long-suffering, stoic.
حمولة *ḥumuula* /n/ **1** load, burden (on a vehicle). **2** load limit, bearing capacity. *ḥumuulit ik-kubri xamsa ʈinn* the bridge has a load limit of five tons.
حمّال *ḥammaal: ḥammaal il-ʔasiyya* longsuffering, stoic, uncomplaining.
حمّالة *ḥammaala* /n pl *-aat*/ **1a** shoulder strap. *fanilla b-ḥammalaat* a sleeveless vest. **1b** braces, suspenders. **2** strap with which to carry a load. **3** trivet, tripod.
محمل *maḥmal* /n pl *maḥaamil*/ richly decorated camel litter; specifically, that formerly sent each year to Mecca with the Egyptian pilgrim caravan.
انحمل *ʔinḥamal* /vi/ to be borne, be carried. -iva *miṭḥimil*.
حمّل *ḥammil* /vt/ **1** to load. *ḥammiluu ʕala gmaal* they loaded it on camels. *b-aḥammil-ak il-masʔuliyya* I hold you responsible. ‖ *ḥammil il-faraamil* to slam on the brakes. **2** to support, hold up. *ʔik-kureek bi-yḥammil il-ʕarabiyya* the jack holds the car up. -vn *taḥmiil*; ava/pva *miḥammil*.
¶ *ḥammil ʕala* to lean on. *ḥaasis b-dooxa ʔiddii-ni k-kursi ʔaḥammil ʕalee* I feel giddy, give me the chair to lean on.
تحميل *taḥmiil* /n pl *-aat*/ *[arch]* load, weight.
تحميلة *taḥmiila* /n pl *-aat*/ *[auto]* block or chock at the end of a hydraulic lift ramp which prevents a car from rolling off.
اتحمّل *ʔitḥammil* /vt/ **1** to endure, put up with. *laazim nitḥammil mataaʕib il-ḥayaah* we must put up with the hardships of life. **2** to take upon oneself. *miin ḥa-yitḥammil il-masʔuliyya* who will assume the responsibility? -/vi/ **3** to be loaded, be carried. **4** to be held up, be supported. **5** to bear a grudge, bear malice. *mitḥammil minni min yoom ma ʃatamt-u* he's had a grudge against me ever since the day I swore at him. -vn *taḥammul*; ava/iva *miṭḥammil*.
اتحامل *ʔitḥaamil* /vi/ to take sides (against s.o. or s.th.), make unreasonable demands (of s.o.), be hard (on s.o. or s.th.). *ma-titḥamil-ʃ*[i] *ʕala balad-ak kida* don't be so hard on your country. *raʏm*[i] *ʔinni ʕayyaan itḥamilt*[a] *ʕala nafs-i w-ʕumt iftaʏalt* although I was ill I braced myself and set to work. -vn *taḥaamul*; ava *miṭḥaamil*.
احتمل *ʔiḥtamal* /vt/ to endure, suffer, put up with. *maskiina - ʔiḥtamalit kitiir* poor woman, she's had a lot to put up with in life. -vn *ʔiḥtimaal*; ava *miḥtimil*; pva *muḥtamal*.
¶ *yuḥtamal* it is possible, there is a possibility. *yuḥtamal ʔinnak tiqabl-u fis-sikka* you may just meet him on the way.
احتمال *ʔiḥtimaal* /n pl *-aat*/ possibility. *da mugarrad iḥtimaal ḥa-tiigi bukra* it is only a possibility that she may come tomorrow.
محتمل *muḥtamal* modal of possibility. *muḥtamal yiigi wi-muḥtamal ma-ygii-ʃ* maybe he'll come, maybe he won't.
استحمل *ʔistaḥmil* **1** /vt/ to endure, put up with. *ʔiz-zahr*[i] *b-yistaḥmil in-naar* cast iron withstands fire. *ʔistaḥmilt-ik lamma l-marḥuum gooz-ik itwaffa laakin*

dilwaqti ... I put up with you till your husband died, but now .... **2** /vi/ to last, have stamina. *haatii-lu gazma kwayyisa ʕaʃaan tistaḥmil* buy him good-quality shoes so that they will last. *ʁaṣbin ʕan kull[i] maʃakl-ak laazim tistaḥmil* no matter what your problems are, you must carry on. - vn *ʃistiḥmaal*; ava *mistaḥmil*.

[2] (ح م ل)

حمل *ḥamal*[2↑] /n pl *ḥimlaan*/ **1** lamb. *ʃil-ḥamal [astrol]* Aries. **2** *[Chr]* offertory, (unconsecrated) Host.

حملاوى *ḥamalaawi* /adj */ from Hamoul, a village in Minufiya. *ḥamalaawi ya xaṣṣ* lettuce vendor's call.

[1] ح م م

حمّى *ḥamma[1]* /vt/ **1** to bath. **2** to water a crop heavily, flood a field (e.g., of rice). - vn *taḥmiyya*; ava/pva *miḥammi*.

حمى *ḥuma* /n/ bathing. *yoom il-ḥuma* bath day. *ma-bi-yḥibb[i]-ʃ il-ḥuma* he doesn't like bathing.

حموم *ḥumuum* /n/ bathing. *ḥumuum il-ʕaruusa* (or *il-ʕariis*) the bride's (or groom's) traditional ceremonial bathing on the night preceding the consummation of a marriage.

حمّام *ḥammaam* /n pl *-aat*/ **1** bathroom, public bath-house, (loosely also) w.c., lavatory. *feen il-ḥammaam min faḍl-ak* where is the bathroom, please? ‖*zayy[i] ḥammaam bala mayya* (like a bathroom without water) utterly useless. - *duxuul il-ḥammaam miʃ zayy[i] xruug-u [prov]* it's easier to get yourself into a situation than it is to get out of it. **2** bath. *ʃiddeet-u ḥammaam* I gave him a bath. *xad ḥammaam* he took a bath. ‖*ḥammaam sibaaḥa* swimming pool. - *ḥammaam ʃams* a sunbathe.

حمّامجى *ḥammamgi* /n pl *-yya*/ *[obsol]* proprietor of, or attendant at, a public bath.

استحمّى *ʃistaḥamma* /vi/ **1a** to bathe, have a bath, wash oneself all over. **1b** *[euphem]* to have sexual intercourse (in reference to the bath that, according to Islamic precepts, must follow the act). **2** to bathe, go for a swim. - vn *ʃistiḥmaam↑*; ava *mistaḥammi*.

[2] ح م م see also [2] ح م ى

حمّى *ḥumma* /n pl *ḥummiyyaat, ḥummiyaat*/ fever. *ḥumma muʕdiyya* an infectious fever. *ʃil-ḥumma l-ʃisbanyooli* Spanish influenza. *ḥumma ṣafra* yellow fever. *mustaʃfa l-ḥummiyaat* fever hospital, hospital for infectious disease. ‖*raagil ḥumma* a pest of a man.

محموم *maḥmuum* /adj */ **1** feverish, suffering from fever. **2** excited.

[3] ح م م

حمام *ḥamaam* /coll n/ pigeon(s), dove(s). ‖*ʃaal il-ḥamaam ḥaṭṭ il-ḥamaam* (the doves flew off, the doves flew down) a rhythmic chant used by children when pounding on the back of one of their number as part of a guessing game. - *dura ḥamaam* or *ḥamaam ya dura* corn as delicious as pigeon! (cry of the vendor of grilled corn-on-the-cob).

حمامة *ḥamaama* /n/ **1** /unit n, pl *-aat*/ a pigeon, a dove. *ḥamaamit is-salaam* the dove of peace. ‖ *ʃir-raagil zayy il-ḥamaama ʃiza rayyiʃit ṭaarit [prov]* a man is like a pigeon - when it grows feathers it flies away (advice to a woman to spend her husband's money lest it tempt him to marry another). - *(zayy il-)ḥamaama* very fast, as in *rawwaḥ ʕal-beet (zayy il-)ḥamaama* he went flying home. **2** /no pl/ *[children]* penis.

[1] ح م و

حموى *ḥamawi* /adj */ from Hama (in Syria). *ḥamawi ya miʃmiʃ* apricot vendor's cry.

[2] ح م و see [2] ح م ى : *ḥamw, ḥamwa*

[1] ح م ى

حمى *ḥama[3] (i)* /vt/ to protect, defend. *rabb-i-na yiḥmii-k* God keep you! *ʃana sawwaaq ʃaqdar ʃaḥmi nafs-i fiṭ-ṭariiq* I'm a driver who can take care of himself on the road. - vn *ḥimaaya*; ava *ḥaami*; pva *maḥmi*.

حماية *ḥimaaya* /coll n/ *[obsol]* European(s) in Egypt enjoying certain legal privileges. ‖ *ʃinta ḥmaaya* do you think you can get away with your (insolent) behaviour?

حامى *ḥaami[1]* /n */ protector (often used in intercessions to saints). ‖*ḥamii-ha ḥaramii-ha [prov]* its guardian is its robber (e.g., in reference to a corrupt upper official in an organization).

حامية *ḥaamiya↑* /n pl *-aat*/ garrison.

حمى *ḥima* /n/ **1** protection, patronage. *ʃana f-ḥimaa-k* I rely on your protection. **2** place of security, especially one's homeland.

احتمى *ʃiṭḥama* /vi/ to be protected, be defended. - iva *miṭḥimi*.

انحمى *ʃinḥama* = *ʃiṭḥama*. - iva *minḥimi*.

حامى *ḥaama* /vi/ to stand in defence. *dayman bi-yḥaami ʕan abuu* he always takes his father's side. - vn *miḥamiyya*; ava *miḥaami*.

محامى *muḥaami* /n * and pl *-yya*/ lawyer.

التحامى *ʃiṭḥaama* /vi/ to take refuge (behind s.o. or s.th.), place oneself under protection. *ma-tiṭḥamaa-j fiyya* don't try to hide behind me! - ava *miṭḥaami*.

اختمى *ʃiḥtama* /vi/ to take refuge. - ava *miḥtimi*.

²ح م ى
حمى *ħimi (a)* /vi/ **1** to become hot. *ʕif-fams ʿ ħimyit* the sun grew hot. **2** to become sharp. *ʕis-sikkiina ħimyit mis-sann* the knife got sharp with whetting. **3** to become pungent, strong or spicily hot in taste. **4** to become intense. *ʕil-matʃ ʿ ħimi* the game warmed up. - vn *ħumuww, ħamayaan*; ava *ħaami, ħamyaan.*
حمى *ħama⁴ (i)* /vt/ to heat (an oven or furnace). - vn *ħamy, ħamiyya*; ava *ħaami*; pva *maħmi.*
حميّة *ħamiyya* /n/ zeal, fervour, intensity. *raagil ma-ɛandu-ʃ ħamiyya* he's a spineless fellow.
حامى *ħaami²* /adj */ **1** hot. *damm-u ħaami* he's hot-blooded. ‖ *bil-ħaami w-bil-baarid* by all possible means. - *la ɛala ħaami wala ɛala baarid* restive. **2** sharp. **3a** pungent, strong, spicy (to taste). **3b** unpleasantly sweet (to taste). **4** energetic, lively, quick.
حمو *ħamw* /n/ **1** heat. *ʕeeh il-ħamw ʿ da* how hot it is! ‖ *ħamw in-niil* prickly heat. **2** rash.
حموة *ħamwa* /n pl *-aat*/ **1** /inst n/ a stoking. ‖ *fi-ħamwit-(u)* ≈ (strike) while the iron is hot, as in *xuff ʿ fil-mawquuɛ fi-ħamwit-u* get on with the business while it's a hot issue. **2** *[mech]* spot of excess metal removed from a metal sheet with a welding torch. **3** a pimple.
حمّى *ħimmi: ʈumbaak ħimmi* a strong type of tobacco.
محمى *miħma* or *maħma* /n pl *-aat, maħaami*/ fire-chamber of a mud oven (see Pl.C, 10).
حمّى *ħamma²* /vt/ **1** to make spicy. *ħammi l-kaari ʃwayya* add more spice to the curry. **2** to vitalize, stimulate, intensify. *ʕig-goon illi ga f-ʃawwil diqiiqa ħamma l-matʃ* the goal which was scored in the first minute gave spirit to the match. ‖ *ħamma ʈ-ʈalq* to induce labour, as in *ʕil-baṣal bi-yħammi ʈ-ʈalq* onions induce labour. - vn *taħmiyya*; ava *miħammi.*
استحمى *ʕistaħma* /vt/ **1** to find to be or consider hot or spicy. **2** to select for spiciness. *ʕistaħmaa-li qarn ʿ filfil min hinaak* find me a hot pepper from over there. - ava *misʕtaħmi.*

³ح م ى see ¹ح م م: *ħamma¹, ħuma, ʕistaħamma*

ح ن ب ل
حنبلى *ħanbali* /pl *-yyiin, ħanbaliyya, ħanabla*/ **1** /n/ adherent of the school of Islamic law named after Ahmad Ibn Hanbal. — /adj/ **2** Hanbalite. *ʕil-mazhab il-ħanbali* the Hanbalite school of law. **3a** rigid, strict, puritanical. **3b** finicky, fastidious.

¹ح ن ت
حنت، حنث *ħint: ʕibn ʿ ħint* opportunist, sharp operator.

²ح ن ت
حانوتى، حنوتى *ħanuuti* /n pl *-yya*/ one who prepares a corpse for burial, undertaker, mortician.

ح ن ت ف
حنتف *ħantif* /vt/ **1** to trim tiny pieces off (s.th.). *laazim tiħantif il-luqma bi-snaan-ak* do you have to nibble bits off the edge of the bread?! **2** to touch up, attend painstakingly to the appearance of (s.o. or s.th.). *ʈuul in-nahaar qaɛda tħantif fi-bint-a-ha* she fusses over her daughter's appearance all day long. *ħantifit ħawagib-ha* she plucked her eyebrows. - vn *ħantafa*; ava/pva *miħantif.*
حنتوفة *ħantuufa* /n pl *-aat*/ small piece, fragment.
اتحنتف *ʕitħantif* /vi/ **1** to have tiny pieces trimmed off. **2** to be touched up. **3** to preen oneself. - ava/iva *mitħantif.*

ح ن ث see ¹ح ن ت

ح ن ب ط
حنبوط *ħambuuʈ* /n pl *ħanabiiʈ*/ *[agric]* flowering shoot (e.g., of an onion, radish or carrot plant) grown for seed.
حنبط *ħambaʈ* /vi/ **1** *[agric]* to produce flowering shoots (of, e.g., onions, radishes, carrots). **2** *[slang]* to become erect (of the penis, clitoris, nipples). - vn *ħambaṭa*; ava *miħambaʈ.*

ح ن ج ر
حنجرة *ħangara↑* /n pl *ħanaagir*/ larynx, throat.

ح ن ج ل
حنجل *ħangil* /vt/ **1** to make (clothes) short or too short. *ʕinta ħangilt il-fustaan xaaliṣ* you've made the dress extremely short. — /vi/ **2** to hop on one foot. **3** to practise trickery and deception. *kaan ɛaayiz yiħangil fil-mawquuɛ bass iħna faqsiin-u kwayyis* he wanted to do some dirty work, but we are wise to him. - vn *ħangala*; ava *miħangil.*
حنجل *ħangal: bil-ħangal wil-mangal* (1) bringing bad luck. (2) using every possible means to achieve an end.
اتحنجل *ʕitħangil* /vi/ **1** to hop on one foot. *ʕawwil ir-raqṣ it-tiħangiil [prov]* (when one first dances, one hops) ≈ everything is difficult at the beginning, practice makes perfect. **2** to practise trickery. **3** to be made too short (of clothes). - vn *tiħangiil*; ava/iva *mitħangil.*

ح ن د ق
حندق *ḥandaq* /vt/ to make dainty and small. *ʕik-kaam ḥaaga lli ɛamaltii-ha fil-ʃooḍa ḥandaquu-ha* what you've done to the room has made it much more charming and intimate. *gineena mḥandaqa* a pocket-handkerchief of a garden. ***bint*** *mḥandaqa* a petite girl. - vn *ḥandaqa*; ava/pva *miḥandaq*.
اتحندق *ʔitḥandaq* /vi/ to be made or become dainty and small. - iva *mitḥandaq*.

ح ن س
حنّس *ḥannis* /vt/ to tantalize, stimulate a desire that cannot be fulfilled. - vn *taḥniis*; ava/pva *miḥannis*.
اتحنّس *ʔitḥannis* /vi/ to be tantalized. - iva *mitḥannis*.

ح ن ش
حنش *ḥanaʃ* /n pl *ʔaḥnaaf, ḥiníʃa*/ snake, eel.

ح ن ش ص
حنشصة *ḥanʃaṣa* /n/ affected airs. *balaaf il-ḥanʃaṣa k-kaddaaba di* none of these ridiculous airs and graces!
محنشص *miḥanʃaṣ* /adj */ ostentatious, putting on airs.
اتحنشص *ʔitḥanʃaṣ* /vi/ to put on airs, affect a manner calculated to impress. - ava *mitḥanʃaṣ*.

ح ن ض ل
حنضل، حنظل *ḥanḍal* /coll n/ colocynth. ‖*ɛiʃt-u ḥanḍal* he has a wretched life.

ح ن ط
حنط *ḥiniṭ* /adj */ savoury (of food).
حناطة *ḥanaaṭa* /n/ savouriness, tastiness (of food).
حنوط *ḥunuuṭ* /n/ *[Chr]* embalming oils.
حنّط *ḥannaṭ* /vt/ to embalm. - vn *taḥniiṭ*; ava/pva *miḥannaṭ*.
اتحنّط *ʔitḥannaṭ* /vi/ to be embalmed. - iva *mitḥannaṭ*.

ح ن ط و ر
حنطور *ḥanṭuur* <perh T *hinto* from Hungarian> /n pl *ḥanaṭiir*/ horse-drawn cab. ‖*ḥanṭuur il-ɛeen* the orbital ridge of the eye. *ʔiddeet-u ɛala ḥanṭuur ɛeen-u* I gave him a real shiner.

ح ن ظ ل see ح ن ض ل

(ح ن ف)
حنفى *ḥanafi* **1** /prop n/ male given name. **2** /n * and pl *-yya, ʔaḥnaaf*/ adherent of the school of Islamic law named after Abu Hanifa. **3** /adj */ Hanafite. *ʔil-mazhab il-ḥanafi* the Hanafite school of law.
حنفيّة *ḥanafiyya* /n pl *-aat*/ tap, faucet.

[1] ح ن ك
حنكة *ḥunka, ḥinkaˆ* /n/ experience, skill.
حنّك *ḥannik* /vt/ to make (s.o.) experienced or worldly wise. *ḥannikit-u t-tagaarib* experience has taught him a thing or two. - vn *taḥniik*; pva *muḥannak*.
اتحنّك *ʔitḥannik* /vi/ to become or be made worldly wise, gain experience. - ava/iva *mitḥannik*.

[2] ح ن ك
حنك *ḥanak* /n/ **1** animal's mouth. ‖*ḥanak is-sabɛ* snapdragon, antirrhinum. **2**↓ (person's) mouth. *ḥadd*[i] *ʃiina yiqdar yiftaḥ ḥanak-u* would anyone of us dare to open his mouth? *da lsaan-u ma-yidxul-ʃ*[i] *f-ḥanak-u* he talks too much. ‖*ɛazam-hum bi-nuṣṣ*[a] *ḥanak* he invited them half-heartedly.

ح ن ك ش
حنكش *ḥankiʃ* /vi/ to rummage around, potter about. *ma-luu-ʃ ʃuxl*[i] *ɣeer il-ḥankaʃa* he's got nothing to do but potter around. - vn *ḥankaʃa*; ava *miḥankiʃ*.
محنكشاتى *miḥankaʃaati* /adj pl *-yya*/ dithery, confused.

[1] ح ن ن
حنّ *ḥann (i)* /vi/ **1** to show tenderness, behave kindly. *bi-tsiib-u l-ɣaayit ma yitnibiḥ wi-baɛdeen tiḥinn*[a] *ɛalee* she leaves him till he's cried himself hoarse and then her heart goes out to him. ‖*bi-yḥinn*[a] *ɛal-ɣalaaba* he gives alms to the poor. *-zayy il-wizz - ḥinniyya bala bizz [prov]* like the goose who mothers her goslings without breast feeding (of one who does nothing to prove his convictions). **2** to yearn. *da-na b-aḥinn*[i] *l-ʔayyaam zamaan* how I miss the old days! **3** to become soft. **4** to relax and begin to yield milk (of a dairy animal). *ʔil-baqara g-gidiida b-taaxud ɣalaba ɛala ma tḥinn* the new cow takes a lot of coaxing before she gives milk. - vn *ḥinniyya, ḥanaan, ḥaniin*; ava *ḥaanin*.
حنون *ḥanuun* /adj */ kind-hearted, affectionate, tender. *qalb-u ḥanuun* he has a kind heart.
حنين *ḥuneenˆ, ḥineen*[i] /prop n/ male given name. ‖*rigiɛ bi-xuffay ḥuneen* he came back empty-handed.
حنّين *ḥinayyin* /adj */ **1** kind, affectionate, tender. *qalb-u ḥnayyin* he's kindhearted. **2** soft, yielding. *martaba ḥnayyina* a soft mattress. *bi-titɛimil warda rṣaaṣ ɛaʃaan tibqa ḥnayyina ɛaṣ-ṣiini* the washer is made of lead so it will be easy on the porcelain.
أحنّ *ʔaḥann* /el/ more/most kind, affectionate or tender.

حنّن *ħannin* /vt/ **1** to cause to behave with kindness or tenderness. *ʕana ʁawz-u yitwassaṭ-li ʁandaha wi-yħannin ʁalb-a-ha ʁalayya* I want him to put in a good word with her and soften her heart towards me. ‖ *ʕallaah yiħannin (ʁaleek)* may God make people be kindly to you (said to a beggar when refusing him alms). **2** *[rur]* to calm and give confidence to (a dairy animal) as an encouragement before milking. - vn *taħniin*; ava *miħannin*.

اتحنّن *ʕitħannin* /vi/ passive of *ħannin*. - iva *mitħannin*.

[2] ح ن ن see [1] ح ن ى: *ħinna*

[3] ح ن ن see ح ن ى ن: *ħineen*[2]

[1] ح ن ي

حنّاء، حنّة *ħinna* /n/ henna. ‖ *leelit il-ħinna* eve of consummation of a marriage when the bride and groom are traditionally decorated with henna. - *tamr*[i] *ħinna* mignonette.

حنّى *ħanna* /vt/ to dye with henna. ‖ *ya mħanni deel il-ʁaṣfuur ... huwwa l-manṣuur* O putter of henna on the bird's tail, he (name of the person referred to) is the victorious! (chant sung to oneself or another for encouragement). - vn *taħniyya*; ava *miħanni*.

اتحنّى *ʕitħanna* /vi/ to be dyed with henna. - iva *mitħanni*.

[2] ح ن ى

حنى *ħana (i)* /vt/ to bend, twist. *ḍahr-u maħni* his back is bent. - vn *ħany, ħanayaan*; ava *ħaani*; pva *maħni*.

حنية *ħanya* /n pl *-aat*/ **1** bend, curve. ‖ *ħanyit ir-raḍaba* humiliation. **2** stoop.

حنيّة *ħaniyya* /n pl *-aat*/ low recess.

انحنى *ʕinħana* /vi/ **1** to bend or twist, be bent or twisted. **2a** to bow, curtsey. **2b** to stoop. - vn *ʕinħina*; ava/iva *minħini, munħani*.

انحناء *ʕinħinaaʔ*↑ /n pl *-aat*/ bend, curve.

منحنى *munħanaʔ* /n pl *munħanayaat*/ bend, curve. *ʕis-sawwaaʔ laazim yudxul fil-munħana bir-raaħa* the driver should make the turn slowly.

اتحنى *ʕitħana* = *ʕinħana*. - ava/iva *mitħini*.

ح ن ى ن

حنين *ħineen*[2]↑: *ħineen wi-mineen* a very long time, as in *kull*[i] *ħneen wi-mneen* once in a blue moon, *baʁd*[i] *ħneen wi-mineen* after endless waiting and bother.

ح ٥

حه *ħah* /fem n, pl *-aat*/ sixth letter of the Arabic alphabet. - also *ħaa, ħaa, ħaaʕ*.

ح و ت

حوت *ħuut* /n pl *ħitaan*/ **1** whale. ‖ *zeet kibdit il-ħuut* cod-liver oil. **2** *ʕil-ħuut [astrol]* Pisces.

[1] ح و ج

حوج *ħawag (i)* /vt/ to expose to need, cause to need. *ʕallaaħ ma-yiħwig-na lii* may God never put us in a situation where we need him! *ʕilli tikrah wiff-u yiħwig-ak iz-zamaan li-ʁafaa [prov]* ≈ the person you hate the sight of now you may have to beg from later. ‖ *lamma ħawagit li-ḍarb* when it came to blows. - vn *ħawga, ħaaga*; ava *ħaawig*; pva *maħwuug*.

حوجة *ħawga* /n/ need, want, destitution. *ma-yzill*[i]*-ʃ il-bani ʕaadam ʕilla l-ħawga [prov]* nothing degrades a man like need. ‖ *wala ħawga* ≈ I don't need your help (any more). *wala (l-)ħawga li-...* there is no need for the help of ... (with reference to one whose unwilling assistance is dispensed with), as in *ʕana ʁamalt if-ʃaay bi-nafs-i wala l-ħawgaa-lu* I made the tea myself without any help from the likes of him!

حاجة *ħaaga* /n pl *-aat*/ **1a** thing, object. *ʕinta gaayib il-ħagaat di mineen* where did you get these things from? ‖ *ħaagit il-ħukuuma* government property. - *ħaagit il-beet* the household shopping, the groceries. **1b** anything, something. *ma-ʁult*[i]*-ʃ ħaaga* (1) I didn't say anything. (2) I haven't raised any objection. *ma-ʃatamt-uu-ʃ wala ħaaga* I didn't insult him or anything of the sort! **2** matter, affair. *ʕiftakart-a-ha ħaaga basiiṭa* I thought it was a simple matter. — /no pl/ **3** need, want. *fi-waʁt il-ħaaga* in time of need. *ṣaaħib il-ħaaga ʕarʁan [prov]* a man in need is a headstrong man. *fi-ħaaga li-* in need of, as in *ʕana miʃ fi-ħaaga l-ʕayy*[i] *musaʁda minnu* I don't need any help from him. ‖ *ʁaḍa ħaaga* to relieve oneself. - *ʁaḍa minha* (or *maʁaaha) ħaaga* he had sexual intercourse with her.

أحوج *ʔaħwag* /el/ more/most needy.

اتحوج *ʕitħawag* /vi/ to be exposed to need. *ʕin ʃa-lla ma-titħiwig-ʃ [women and beggars]* may you never be in need! - iva *mitħiwig*.

انحوج *ʕinħawag* = *ʕitħawag*. - iva *minħiwig*.

حوّج *ħawwig*[1] **1** /vt/ to expose to need, cause to need. *goz-ha miʃ miħawwig-ha l-ħaaga* her husband lets her want for nothing. **2** /vi except w foll *fiwayyit ħagaat*/ to shop, go shopping. - vn *taħwiig*; ava *miħawwig*.

اتحوّج *ʕitħawwig*[1] /vi/ **1** to be exposed to need. **2** to shop, go shopping. - ava/iva *mitħawwig*.

احتاج *ʕiħtaag* **1** /vt/ to need. *yiħtaag fatla* it needs a piece of string. **2** /vi/ to be in need. *bi-yiħtaag li-taʁb*[i]

kitiir it requires a lot of effort. *huwwa lli miḥtag-li mif ʕana lli miḥtag-lu* it's he who needs me, not I who need him. - vn *ʕiḥtiyaag*; ava ***miḥtaag***.
احتياج *ʕiḥtiyaag* /n pl *-aat*/ necessity, need.
محتاجات *miḥtagaat: ḥagaat wi-miḥtagaat* all sorts of things; this, that and the other.

ح و ج [2]
حوايج *ḥawaayig* /pl n/ **1** oddments. **2** giblets.
حوّج *ḥawwig*[2] /vt/ **1** to season with spices. **2** to add delicacies (such as raisins and nuts) to (food). - vn *taḥwiig*; ava/pva *miḥawwig*.
تحويجة *taḥwiiga* /inst n, pl *-aat, taḥawiig*/ a mixture of spices, seasonings or delicacies for adding to food.
محوّجة *miḥawwiga* /n/ a preparation of oil, sugar and other fattening substances taken to help one gain weight.
اتحوّج *ʔitḥawwig*[2] /vi/ passive of *ḥawwig*[2]. - iva *mitḥawwig*.

ح و ح و
حوحو *ḥuuḥu* /n/ last remains, all that's left.

ح و د
حود *ḥawad (i)* **1** /vt/ to turn, divert. *ma-tiḥwid-f*[i] *ʔiid-ak* don't turn your hand aside. *ʔiḥwid wiff il-ʕarabiyya ʃwayya* turn the front of the car a little. **2** /vi/ to turn, veer, change direction. *ʔiḥwid yimiin ya-sṭa* turn to the right, driver! - vn *ḥawadaan, ḥawda*; ava *ḥaawid*; pva *maḥwuud*.
حودة *ḥawda* /n pl *-aat*/ bend, turn.
حودايّة *ḥawadaaya* /n pl *-aat*/ bend, turn (in a street).
اتحود *ʔitḥawad* /vi/ to be diverted, be turned aside. - iva *mitḥiwid*.
حوّد *ḥawwid* = *ḥawad*. - vn *taḥwiid*; ava *miḥawwid*.
¶ *ḥawwid ʕala* to drop in at, stop off at. *ḥ-aḥawwid ʕalee* I'll call in at his place on the way. *ḥawwidt*[a] *ʕal-baqqaal fa-tʔaxxart*[i] *ʃwayya* I stopped at the grocer's, so I was made a little late.
اتحوّد *ʔitḥawwid* = *ʔitḥawad*. - iva *mitḥawwid*.

ح و ر [1]
حارة *ḥaara* /n pl *-aat, ḥawaari*/ **1** narrow lane, alley (traditionally constituting a small neighbourhood). *laffifit-ni ḥaara guwwa ḥaara w-zuqaaq guwwa zuqaaq* she led me round about from lane to lane and alley to alley. *ʔil-ḥaara kull-a-ha staʃaaʕit bil-mawḍuuʕ* the whole neighbourhood buzzed with the affair. **2** track or lane within a wider way (e.g., that for a single contestant in a running or swimming race, or a traffic lane).
محور *miḥwar* /n pl *maḥaawir*/ **1** axis. **2** axle.
محوري *miḥwari* /adj/ central. ‖*musmaar miḥwaari* pivot bolt.
محارة *maḥaara, muḥaara* /n pl *-aat*/ **1** /unit n/ a sea-shell. *raqeet-ak min ʕeen ig-gaara ʔaḥadd*[i] *mil-maḥaara* I have censed you against your neighbour's evil eye, sharper than a sea-shell. **2** plasterer's trowel, float. see further under م ح ر
حوّر *ḥawwar* /vt/ to change, modify, twist. *yaaxud il-fikra w-yḥawwar-ha* he takes the idea and adapts it. *ʔinta bi-tḥawwar kalaam-i* you're twisting my words! - ava *taḥwiir*; ava/pva *miḥawwar*.
اتحوّر *ʔitḥawwar* /vi/ to be changed, be modified, be twisted. - iva *mitḥawwar*.
حاور *ḥaawir* /vt/ **1** to dodge, feint. **2** to argue with, debate with. *ḥawir-ni ktiir fit-taman* he debated the price with me for a long time. **3** to keep (s.o.) guessing, play verbal games with. *ḥawir-ni mudda w-baʕdeen ʕal-li l-ḥaʔiiʔa* he kept me guessing for a while and then told me the truth. - vn *ḥiwaar, miḥawra*; ava *miḥaawir*.
حوار *ḥiwaarˀ, ḥuwaarˀ* /n pl *-aat*/ dialogue.
اتحاور *ʔitḥaawir* /vi/ to debate, argue. - ava *mitḥaawir*.

ح و ر [2]
حور *ḥuur*[1]ˀ /coll n/ houris.
حوريّة *ḥuriyya* /n pl *-aat, ḥawaari*/ houri, nymph.
حور *ḥawar* /n/ intense contrast between the white of the eye and the darkness of the iris (regarded as a sign of beauty).

ح و ر [3]
حور *ḥuur*[2]ˀ /n/ kidskin.
حور *ḥuur*[3] /coll n/ poplar(s).

ح و ز
حاز *ḥaazˀ (u)* /vt/ to obtain, gain possession of. - vn *ḥayazaan*; ava *ḥaayiz*.
حوزة *ḥooza* /n/ possession, property.
حيازة *ḥiyaaza* /n/ *[leg]* custody of land or property by right of ownership or tenancy. *kull*[i] *ḥyazt-u xamas fadaadiin wi-ḥatta dool bil-ʔigaar* he only has control over five feddans and even those he rents.
انحاز *ʔinḥaaz* /vi/ to take sides, side (with s.o.). *ʔinḥaaz li-mraat-u ḍidd axuu* he sided with his wife against his brother. *ʕadam il-inḥiyaaz [pol]* non-alignment. - vn *ʔinḥiyaaz*; ava *minḥaaz*.
منحاز *munḥaaz* /adj/ *[pol]* aligned.

ح و س
حوس *ḥawas (i)* /vt/ to perplex, confuse, bewilder. *ʔeeh*

illi ħays-ak what is confusing you? - vn *ħawasaan*; ava *ħaayis*.

حوسة *ħoosa* /n/ perplexity, bewilderment, embarrassment. ‖ *ya ħoosa sooda* or *ya ħost-i [women]* ≈ what am I to do?!

احتاس *ʕiħtaas* /vi/ to become perplexed. *ʕawwil ma nizil maṣr iħtaas fi-kull[a] ħaaga* when first he came to Cairo, he was at a complete loss. ‖ *bi-yiħtaas fi-hduum-u* (he gets entangled in his own clothes) he can't cope with anything. - ava *miħtaas*.

ح و ش [1]

حاش *ħaaf (u)* /vt/ **1** to hold back, keep in, restrain. *ħuufi l-waad ya haanim* keep the child back, Madam. *saʕaat ma-tiqdar-f[i] tħuuf nafs-a-ha wi-truuħ mafguura fil-ʕiyaaṭ* sometimes she can't restrain herself and bursts into tears. *ħuufu l-ħaraami* stop thief! **2** to withhold, reserve. *ħaafit ik-kitaab ʕanni* she withheld the book from me. - vn *ħawafaan*; ava *ħaayif*.

¶ *ħaaf ʕan* to protect. *ħuuf ya rabb* Lord protect us! *ʔana ʔaʕraf aħuuf ʕan nafs-i* I know how to look after myself.

حوش *ħoof* /n pl *ʔaħwaaf, ħiwaaf, ħifaan*/ **1** yard, courtyard. *ħoof il-maħaṭṭa* the forecourt of the station. *ħoof il-madrasa* school playground. *farafṭ-i-lhum ħaṣiira fil-ħoof* I put down a mat for them in the courtyard (of the house). **2** sectioned-off plot of land. *bi-nizraʕ-u fi-ħwaaf ʕafaan yiṭlaʕ fatl* we sow it in separate plots to produce seedlings. **3** graveyard.

حوّاش *ħawwaaf* /n */ **1** one who intervenes in a quarrel, mediator. **2** /no pl/ Protector (epithet of God). *ħuuf ya ħawwaaf [women in trad soc]* Lord protect us! (used sarcastically in quarrels).

اتحاش *ʔitħaaf* /vi/ to be retained, be held back. *ʔil-bool ʕandu tħaaf* he suffers from retention of the urine. *ʔil-ʁaraama tħaafit ʕannu* his fine was suspended. ‖ *sooṭ-u tħaaf* he couldn't speak. - iva *mitħaaf*.

انحاش *ʔinħaaf* = *ʔitħaaf*. - iva *minħaaf*.

حوّش *ħawwif* /vt/ to put aside for later use. *ma-ħawwift[i]-f wala malliin* I haven't saved a penny. *bi-ngiib is-sibaax wi-nħawwif-u l-ħadd il-muusim* we get the fertilizer and store it till the season. ‖ *ʔin fa-alla ma-ħadd[a] ħawwif [joc]* never mind the cost! - vn *taħwiif*; ava *miħawwif*.

تحويشة *taħwiifa* /inst n, pl *-aat, taħawiif*/ savings, nest-egg. *taħwiifit il-ʕumr* life-savings.

اتحوّش *ʔitħawwif* /vi/ to be set aside for later use. - iva *mitħawwif*.

ح و ش [2]

حوش *ħawaf* /coll n/ rabble, scum, dregs of society.

ح و ص ل see ح ص ل [2]

ح و ض

حوض *ħood* /n pl *ʔiħwaad, ħiwaad, ʔaħwaad*/ **1** basin, sink. *ħood maṭbax* kitchen sink. *ħood ħammaam* (1) bathroom sink. (2) bath tub. ‖ *ħood rabaaba* peg box of a rebaba. **2a** *[agric]* field plot sectioned off for irrigation. *bi-nirwi l-ʁeeṭ bil-ħood* we irrigate the field plot by plot. **2b** flower-bed or the like in a garden. **3** pelvis. *ħood il-kilya↑ [anat]* renal pelvis. **4** dock. *ħood gaaff* dry dock. **5** rectangular piece in tent appliqué work (see Pl.H, 6).

حوّض *ħawwaḍ* /vt/ *[agric]* to divide (a field) into irrigation basins. - vn *taħwiiḍ*; ava/pva *miħawwaḍ*.

ح و ط

حاط *ħaaṭ (i)* /vi/ to surround. *ħaaṭu bii min kull[i] ħitta* they surrounded him on all sides. ‖ *ʔaħiiṭ-ak ʕilm* I inform you, I notify you. - vn *ħayaṭaan*; ava *ħaayiṭ*.

حيط *ħeeṭ* = *ħeeṭa*.

حيطة *ħeeṭa* /n pl *ħeṭaan*/ wall. *ʔil-ħeṭaan laha wdaan [prov]* walls have ears. ‖ *ʕaʔl-u ħeeṭa* he's a blockhead. - *ʔil-ħeeṭa l-waṭya kull in-naas tinuṭṭ[a] ʕaleeha [prov]* ≈ debase yourself and all men will abuse you. - *mifi gamb il-ħeeṭa* to behave in a self-effacing way, keep out of trouble.

حوط *ħawaṭ* /n/ cunning, slyness.

حواطة *ħawaaṭa* = *ħawaṭ*.

حويط *ħawiiṭ* /adj pl *ħuwaṭa*/ crafty, sly.

اتحاط *ʔitħaaṭ* /vi/ (impersonal) passive of *ħaaṭ*. *ʔitħaaṭ biina* we were surrounded. - iva *mitħaaṭ*.

حوّط *ħawwaṭ* /vt/ to fence, enclose. *ħawwaṭ ig-ginéena* he put a wall around the garden. - vn *taħwiiṭ*; ava/pva *miħawwaṭ*.

تحويطة *taħwiiṭa* /n pl *taħawiiṭ*/ written charm carried in order to keep away evil spirits.

اتحوّط *ʔitħawwaṭ* /vi/ **1** to be fenced in, be enclosed. **2** to close in (on s.o. or s.th.). *ʔitħawwaṭu biina* they closed on us. **3** to wear a *taħwiiṭa*. - ava/iva *mitħawwaṭ*.

اتحاوط *ʔitħaawaṭ* /vi/ **1** to make an enclosure (around s.o. or s.th.). *ʔitħawaṭna biihum* we surrounded them. **2** to behave cunningly or deceitfully. *ħa-titħaawaṭ ʕala miin* who do you think you're trying to deceive? - ava *mitħaawaṭ*.

أحاط *ʔaħaaṭ↑* = *ħaaṭ*. - vn *ʔiħaaṭa*; ava *muħiiṭ*.

إحاطة *ʔiħaaṭa* /n pl *-aat*/ information, notification.

محيط *muḥiiṭ* **1** /adj */ surrounding. *ʕil-manṭiqa l-muḥiiṭa* the surrounding area. — /n pl *-aat*/ **2** circle, coterie. *fil-muḥiiṭ bitaʕ-na* in our circle, among our acquaintance. *muḥiiṭ il-ʕusra* the family circle. **3** *[math]* circumfererence. **4**↑ ocean. - /adjectivally/ *raagil muḥiiṭ* a man of boundless knowledge.

احتاط *ʕiḥtaaṭ* /vi/ to be cautious, take precautions. *ʕiḥtaaṭ minnu - da ḥalangi* watch out with him - he's a swindler! - vn *ʕiḥtiyaaṭ*; ava *miḥtaaṭ*.

احتياط *ʕiḥtiyaaṭ* /vn/ ‖ *ʒubbaaṭ l-iḥtiyaaṭ [mil]* reservist officers. *-min baab l-iḥtiyaaṭ* as a precaution.

احتياطات *ʕiḥtiyaṭaat* /pl n/ precautions.

احتياطى *ʕiḥtiyaaṭi* /adj * and invar/ precautionary, reserve, spare. *ḥabs iḥtiyaaṭi* detention pending investigation. *ʕagala ḥtiyaṭiyya* (or *ʕiḥtiyaaṭi*) spare tyre. - /adverbially/ *ḥ-agiib maʕaaya fluus ziyaada ḥtiyaaṭi* I'll bring some extra money with me for contingencies.

استحوط *ʕistaḥwaṭ* /vi/ to take precautions. *min baab il-istiḥwaaṭ* by way of precaution. - vn *ʕistiḥwaaṭ*; ava *mistaḥwaṭ*.

ح و ف

حوف *ḥoof: ḥoof zaaf* see *zaaf*.

ح و ق

حاق *ḥaaq (u)* /vi/ to be sufficient, be enough - vn *ḥawaqaan*; ava *ḥaayiq*.

حوّق *ḥawwaq* /vi/ to suffice, be satisfying. *mahma tiddii-hum barḍu miʃ miḥawwaq ʃiihum* no matter how much you give them it's never enough. ‖ *ʕik-kalaam ma-bi-yḥawwaq-ʃ[i] ʃii* ≈ he is very thick-skinned. - vn *taḥwiiq*; ava *miḥawwaq*.

ح و ل

حال *ḥaal[1] (u)* /vi/ to complete a full cycle (of time), go full circle. *ma-ḥal-ʃ[i] ʕalee l-ḥool ʕilla w-huwwa mitgawwiz* by the same time the next year he was already married. - vn *ḥawalaan*; ava *ḥaayil*.

¶ *ḥaal been ... wi-been*↑ ... to prevent (s.o. or s.th.) from ... *huwwa lli ḥaal beeni w-been ʕinni ʕasiib il-balad* he is the one who prevented me from leaving the country.

حال *ḥaal[2] (i)* /vt/ to transfer, pass over, refer. *ḥiil if-fuxl[i] da ʕaleeha* pass this job over to her! *ḥaluu ʕal-maʕaaʃ* they pensioned him off. - vn *ḥeela, ḥayalaan*; ava *ḥaayil*.

حول *ḥiwil (a)* /vi/ to develop strabismus, become squint-eyed. - vn *ḥawal*.

حول *ḥawal (i)* /vt/ **1** to make (the eyes) squint, make (the eyes) look in different directions simultaneously. *ma-tiḥwil-ʃ[i] ʕenee-k laḥsan tiḥwall* don't squint your eyes like that or you'll end up with a real squint. **2** to change the direction of. *ʕiḥwil ʕiid-ak ʃiwayya* direct your hand a little the other way. - vn *ḥawalaan*; ava *ḥaawil*.

حال *ḥaal[3]* /masc and fem n/ **1** /pl *ʕaḥwaal*/ state, condition. *ʕil-ḥaal itʁayyar* things have changed. *ma-ʃii-ʃ ḥadd[i] raaḍi b-ḥaal-u* no-one's ever satisfied with his situation. *laazim tiqbaluu-na ʕala ḥal-na* you must accept us as we are. *kull[i] yoom ʕala di l-ḥaal* every day it's the same. *ʃahr[a] ʕaw ʃahreen wi-kull[i] feeʕ yirgaʕ li-ḥaal-u* a couple of months and everything will be back to normal. *ʕil-ʕaḥwaal is-siyasiyya fil-balad* the political conditions in the country. *ḥasab ma tismaḥ il-ʕaḥwaal* as conditions allow. *ʕil-ʕaḥwaal ig-gawwiyya* weather conditions. ‖ *ʕizzayy[i] ḥaal-ak* or *ʕizzayy il-ʕaḥwaal* how are things? how are you doing? - *ʕala kull[a] ḥaal* or *ʕala ʕayy[i] ḥaal* in any case, at any rate. *-fil-ḥaal*↑ right away, immediately. *- bi-ḥaal-* a whole ..., an entire ..., as in *saaʕa b-ḥal-ha* a whole hour, *kiilu lahma b-ḥaal-u* a whole kilo of meat, *kursi nafareen bi-ḥaal-u* a whole double seat. *-ʕala qadd[a] ḥaal-(u)* (1) commensurate with (s.o.'s) means as in *ʕil-ʕarabiyya miʃ qawi bass[a] ʕala qadd[a] ḥal-na bass[i] muḥtaramiin* we are poor people, but respectable. - *ʕil-ḥaal min baʕḍ-u* I'm as badly off as you are, as in *law kaan maʕaaya kunt addii-k bass il-ḥaal min baʕḍ-u* if I had any I'd give you some, but I'm no better off than you. - *ʕil-ḥaal wil-miḥtaal* everything to do with it, the whole works, as in *saʕalt-u ʕan ʕamr-u gab-li l-ḥaal wil-miḥtaal* I asked how he was (and) he told me the whole story, *bi-yṭallaʕ kirf-u w-maṣariin-u w-ḥaal-u w-miḥtaal-u* he takes out its tripes and its intestines and the whole kit and caboodle. *-la ʕandu ḥaal wala miḥtaal* he's destitute. *- daftar il-ʕaḥwaal* chronological register of events used particularly in a police station, police blotter. *- ʕil-ʕaḥwaal if-faxṣiyya [leg]* matters relating to personal status. **2** /no pl/ **2a** one's personal affairs, one's own business. *ḥa-nsiib-ak hina lamma nfuuf ḥal-na w-nirgaʕ naxd-ak baʕdeen* we'll leave you here while we tend to our business and come back and pick you up later. *miʃyu kull[i] waaḥid wara ḥaal-u* each one went about his own business. ‖ *fi-ḥaal-(u)* about his own business, as in *ruuḥ fi-ḥaal-ak* mind your own business! *ʕana f-ḥaal-i wi-nta f-ḥaal-ak* you mind your business and I'll mind mine, *ṭuul ʕumr-i maaʃi gamb il-ḥeeṭa wi-f-ḥaal-i* all my life I've kept out of trouble and minded my own business,

siib-u f-ħaal-u leave him be! -*raaħ li-ħaal-(u)* to go (one's) own way, as in *ʈallaqt-a-ha w-raaħit li-ħaal-ha* I divorced her and she went her own way. -*ʃil-ħaal wiqif* business stagnated. *ħaal-i wiqif* I ceased to prosper. **2b** belongings. *limm*^{i} *ɛzal-na w-lamlim ħal-na* get together our baggage and gather up our belongings. -*ʃaħwaal* /pl n/ **3a** (ways of) behaviour (usually with a pejorative implication). *ʃaħwaal-u ɤariiba* he's a queer fish, one can never tell what he'll do next. *ʃana mistaɛgib ɛala ʃaħwaal-u* I find everything he does extraordinary. **3b** *ʃil-ʃaħwaal* those supernatural powers (the ability to read the future, to be in more than one place at one time etc.) attributed to the most advanced Sufis.

¶ *ħaalan* /adv/ right away, immediately. *hiyya gayya ħaalan* she's coming right away.

حالة *ħaala* /n pl -*aat*/ **1** particular state or condition, situation, case. *ħaalit ʈawaariʃ* a state of emergency. *il-ħaala l-igtimaɛiyya* marital status. *fi-ħaalit ɤiyaab muwaẓẓaf* when an official is away. *fiqlit il-ħaala ɛala kida ʃusbuɛeen* it went on like that for two weeks. *ħalit-na dayyiqa fwayya l-yomeen dool* our (financial) situation is a bit tight these days. ‖*ħalt-ak ħaala* you're in a really bad way! -*bi-ħaalit il-fabriika* in factory condition, brand new. -*zayy*^{a} *ħalaat-* like, *waaħid zayy*^{a} *ħalaat-i* someone like me. **2a** case (of sickness). *ħaalit tayfuud* a case of typhoid. **2b** fit, attack, bout (of sickness, depression etc.). *ɛandu ħaala kida bi-ʇgii-lu lamma ykuun zaɛlaan* he suffers from a condition which makes him subject to an attack when he gets upset.

حالى *ħaali* /adj/ **1** actual. *ʃil-maqaas il-ħaali btaaɛ il-ʃaks* the actual size of the axle. **2** present, current. *fil-waqt il-ħaali* at the present time.

¶ *ħaaliyyan*↑ /adv/ presently, at the present time.

حول *ħawl* /n/ power, might. *la ħawla wala quwwa ʃilla bi-llaah* (or, more commonly) *la ħawl illaah* there is no power or strength but with God! (an exclamation of helplessness and resignation), *ya ħawl illaah* O might of God! (an exclamation of resignation or indignation).

حول *ħool* /n/ year.

حولى *ħawli* /adj/ *[bot]* annual. *zuhuur ħawliyya* annual flowers.

أحول *ʃaħwal* /adj, fem *ħoola*, pl *ħuul*/ squint-eyed, cross-eyed.

حوالى *ħawaali* /adv/ approximately, circa. *ħawaali s-saaɛa tisɛa* about nine o'clock. *ħawaali xamsa mitr* about five or six metres.

حوالين *ħawaleen* /prep, w pron suff *ħawalee-* (w 1st sing *ħawalayya*)/ around, about. *suur ħawaleen il-beet* a wall around the house. *huwwa miʃ daari bi-lli ħawalee* he's oblivious to what's about him. ‖*ħawalee kalaam kitiir* he has a bad reputation.

حوالة *ħiwaala* /n pl -*aat*/ money order.

حوّال *ħawwaal* /n pl -*aat, ħawawiil/ [agric]* ridge of earth made to control the flow of water to a field being irrigated.

محال *muħaal* /n/ impossibility.

محول *maħwal* /n pl *maħaawil*/ = *ħawwaal*.

محولجى *miħwalgi* /n pl -*yya*/ railroad switchman.

اتحال *ʃitħaal* /vi/ to be transferred, be shifted. *baɛd*^{i} *xamsiin sana fil-wizaara ʃitħaal ɛal-maɛaaf* after fifty years in the ministry he was put on a pension. -*iva mitħaal*.

انحال *ʃinħaal* = *ʃitħaal*. -iva *minħaal*.

اتحول *ʃitħawal* /vi/ **1a** to develop a squint, develop strabismus (of the eyes). **1b** to be made to squint (of the eyes). **2** to be dislocated (of a joint). -ava/iva *mitħiwil*.

انحول *ʃinħawal* = *ʃitħawal*. -ava/iva *minħiwil*.

حوّل *ħawwil* /vt/ **1** to hand over, transfer. *ħa-yħawwil il-qaḍiyya ɛala l-maħaakim* he'll hand the case over to the courts. *ħawwil if-fiik liyya* he made the the cheque over to me. ‖*ħawwil [communic]* over! **2** to transform into, convert into. *xadu l-badroon wi-ħawwiluu maktab* they took the basement and turned it into an office. -vn *taħwiil*; ava *miħawwil*.

تحويلة *taħwiila* /n pl -*aat*/ **1** (telephone) extension. **2** liability. **3** points (on a railway).

محوّل *muħawwil* /n pl -*aat/ [elec]* transformer.

اتحوّل *ʃitħawwil* /vi/ **1** to be handed over, be transferred. **2** to be transformed, be converted. -iva *mitħawwil*.

حاول *ħaawil* /vi/ to try, attempt. *ħawilt*^{i} *maɛaaha bi-zooq* I tried being polite to her. *bi-tħaawil tiɤiẓ-ni* she is trying to irritate me. -vn *miħawla*; ava *miħaawil*.

محاولة *muħawla* /n pl -*aat*/ attempt.

أحال *ʃaħaal*↑ /vt/ to transfer, pass over, refer. *ʃil-mudiir ʃaħal-ni lit-taḥqiiq* the director referred me for investigation. *qaaḍi l-ʃiħaala* magistrate whose job it is to evaluate sufficiency of evidence for trial. -vn *ʃiħaala*.

احوّل *ʃiħwall* = *ħiwil*. -ava *miħwill*.

استحال *ʃistaħaal* /vi/ it was impossible. *ʃistaħaal ɛalayya ʃafahhim-u* it was impossible for me to make him understand. -/sometimes used w neg part *la* for emphasis/ *kaan la yistaħiil baɛd*^{i} *kida ʃaħuɫɫ*^{a} *ħaaga f-buqq-i* it was quite impossible for me after that to put anything in my mouth. -vn *ʃistiħaala*; ava *mustaħiil*.

استحالة *ʃistiħaala* /n/ *[Chr]* transubstantiation.

مستحيل *mustaħiil* /n pl -*aat*/ impossibility. ‖*min raabiɛ il-mustaħiil* (or *il-mustaħilaat*) absolutely impossible.

ح و م
حام *ḥaam (u)* /vi/ to hover (around s.th.). - vn *ḥoom, ḥawamaan*; ava *ḥaayim*.
حومة *ḥooma* /n/ empty piece of land, vacant lot.
حوّامة *ḥawwaama* /n pl *-aat*/ hovercraft.

ح و ن see ¹ح ى ى: *ḥiwaan*

ح و و
حوّاء *ḥawwa¹* /prop n/ Eve. *ya bint[a] ḥawwa, ya-bn[a] ḥawwa* terms used in spells to designate a person whose mother's name is unknown to the magician.

¹ح و ى
حوى *ḥawa¹ (i)* /vt/ to contain. - vn *ḥawy*; ava *ḥaawi*; pva *maḥwi*.
حواية *ḥawaaya* /n pl *-aat, ḥiwyaan*/ coil of cloth or straw used as a pad under hard heavy loads carried on the head.
حويّة *ḥawiyya* /n pl *-aat, ḥiwy*/ pad under a camel-saddle.
حوّى *ḥawwa²* /vt/ to coil (cloth or straw) for use as a *ḥawaaya*. - vn *taḥwiyya*; ava/pva *miḥawwi*.
اتحوّى *ʔitḥawwa* /vi/ to be coiled for use as a *ḥawaaya*. - iva *miṯḥawwi*.
احتوى *ʔiḥtawaʔ* /vi/ to contain. *ʔil-baaku b-yiḥtiwi ɛala ɛaʃar ɛilab* the packet contains ten boxes. - vn *ʔiḥtiwaaʔ*; ava *miḥtiwi*.
محتويات *muḥtawayaat* /pl n/ contents.

²ح و ى
حوى *ḥawa² (i)* /vi/ **1** to conjure, do magic tricks. **2** to behave cunningly. - vn *ḥawy, ḥiwa*; ava *ḥaawi*; pva *maḥwi*.
حاوى *ḥaawi* /n pl *ḥuwaah*/ snake-charmer, magician, conjurer. ‖*ḥa-tiftaxal ḥaawi ɛalayya* are you trying to deceive me? - *yaama fig-giraab ya ḥaawi* see *giraab*.

ح ى ث see ح ى س

ح ى ج see ¹ح و ج: *ʔiḥtiyaag*

ح ى د
حاد *ḥaad (i)* /vi/ to deviate, stray. *ma-tḥid-ʃ[i] ɛan il-ḥaqq* don't stray from the truth! - vn *ḥayadaan, ḥiyaad*; ava *ḥaayid*.
حياد *ḥiyaad* /n/ neutrality. *xallii-k ɛal-ḥiyaad* don't get involved. *ʔil-ḥiyaad il-ʔigaabi* active neutrality.
حايد *ḥaayid* /vt/ to handle cautiously, deal with diplomatically. *ʔana b-aḥayid-hum ɛaʃaan ma-ḥadd[i]-ʃ yismaɛ lina ḥiss* I am always careful when I deal with them so as not to cause scenes. ‖*miḥaayid nafs-u* minding his own business. - vn *miḥayda*; ava *miḥaayid*.
محايد *muḥaayid* /adj */ neutral. *bilaad muḥayda* neutral countries.

ح ى ر
حيرة *ḥiira* /n/ perplexity, bewilderment. *kaanit ḥirt-u ma-baɛd[a]-haa-ʃ ḥiira* he was totally perplexed. ‖*ʃahr il-ḥiira [rur]* the month of Baramhat when it is too cool to sit in the shade but too warm to sit in the sun.
حيران *ḥayraan* /adj */ perplexed. ‖*ʔil-kalb il-ḥayraan* pig-in-the-middle, game in which two or more players toss a ball to each other while one other player tries to get possession of it.
حيّر *ḥayyar* /vt/ to confuse, bewilder. *ʔilli maɛaa ɡirf[i] mḥayyar-u yigiib gooz ḥamaam wi-yṭayyar-u [prov]* he who has some money and doesn't know what to do with it buys a pair of pigeons and flies them (a comment on the high cost of the hobby). - vn *taḥyiir*; ava *miḥayyar*.
اتحيّر *ʔitḥayyar* /vi/ to be (put) in a quandary. - ava/iva *miṯḥayyar*.
احتار *ʔiḥtaar* /vi/ **1** to be perplexed, be at a loss. *ʔiḥtart[i] f-ʔamr-i* I didn't know what to do. **2** to try one's utmost and still fail. *raagil ɛaguuz yiḥtaar yirḍii-ki wi-ydallaɛ-ik* an old man would never manage to please and pamper you. *ʔana ḥtart[i] maɛa l-ɛiyaal* I can't cope with the children. - ava *miḥtaar*.

ح ى ز see ح و ز: *ḥiyaaza*

¹ح ى س
حيث *ḥees* (also *ḥees ʔinn-*) /conj/ since, as. *ḥees kida ma-fii-ʃ maaniɛ* that being the case, there's no objection. *zayy[i] baɛḍ-u ḥees ʔinnak miṣammim* O.K., since you insist.
¶ *min ḥees* /prep/ with regard to. *min ḥees il-mabdaʔ* in principle. *min ḥees if-fakl* as far as the appearance is concerned. - *bi-ḥees ʔinn-* /conj/ in such a way that, so that. *bi-nḥuṭṭ-i-lha gilda b-ḥees ʔinnaha ma-tnaqqaṭ-ʃ* we put a washer on it so that it won't drip.
حيثيّة *ḥaysiyya* /n pl *-aat*/ **1** social position, standing. **2** *ḥaysiyyaat* /pl n/ *[leg]* whereases, legal reasons (for a judgement).

²ح ى س
حيثى *ḥeesi: ɛama ḥeesi* complete blindness.

(ح ى ص)

حيص *ħeeṣ* /n/ perplexity. *fi-ħeeṣ beeṣ* at a complete loss.

حياصة *ħiyaaṣa* /n pl *-aat*/ girth, strap.

ح ى ض

حاض *ħaaḍ (i)* /vi/ to menstruate. - vn *ħeeḍ, ħayaḍaan*; ava *ħaayiḍ*.

حيض *ħeeḍ* /n/ menstruation, monthly period.

حيضة *ħeeḍa* /pl *-aat*/ instance noun of *ħeeḍ*.

ح ى ط see ح و ط: *ħeeṭ, ħeeṭa, muħiiṭ, ʕiħtaaṭ, ʕiħtiyaaṭ, ʕiħtiyaaṭi*

ح ى ف

حيّف *ħayyif* /vt/ to alloy (gold). - vn *taħyiif*; ava *miħayyif*.

اتحيّف *ʔitħayyif* /vi/ to be alloyed (of gold). - iva *mitħayyif*.

ح ى ق

حيّق *ħayyaq* /vt/ to flavour (food), especially by adding salt. - vn *taħyiiq*; ava/pva *miħayyiq*.

حياق *ħiyaaq* /n/ flavour (especially saltiness).

ح ى ل

حيل *ħeel* /n/ **1** strength. *ʔithadd*^{i} *ħel-ha* she became exhausted. *ma-ʕad-ʃ*^{i} *fii ħeel* he has no strength left. *m-aqdar-ʃ ʔaṣlub ħeel-i* I'm exhausted. ‖ *ħeel-ak* hold it! stop! - *ʃidd*^{i} *ħeel-ak* (1) pull yourself together!, pull your socks up! (2) take courage, be brave! - *ʔuqʕud ʕala ħeel-ak* sit down! *ʔuqaf ʕala ħeel-ak* stand up! **2** side effect, after-effect.

حيلة *ħiila* /n/ **1** resource, means. *kull illi ħilt-i* all that I have. *ma-kan-ʃ*^{i} *ħilt-u ħaaga* or *ma-ħilt-uu-ʃ* he didn't have a thing. *ma-xallit-ʃ*^{i} *ħilt-u ħiila* she left him with nothing. ‖ *ʔil-ħiila* the only possession, as in *da ħiilit ʔumm-u* he is his mother's only child. *fii ʕandak wilaad ʏeer il-bint*^{i} *di. - laʔ hiyya l-ħiila* 'Do you have any other children apart from this girl?' 'No, she is all I have.' **2** /pl *ħiyal*/ trick, ruse, stratagem. *ma-bil-yadd*^{i} *ħiila* there is nothing to be done, one is helpless.

حيلي *ħiyali* /adj * and pl *-yya*/ artful.

حايلة *ħayla* /fem adj/ in heat (of a mare).

حايل *ħaayil* /vt/ to cajole. *qaʕad yiħaayil miraat-u ʕaʃaan tuxrug maʕaa* he kept trying to talk his wife into going out with him. - vn *miħayla*; ava *miħaayil*.

اتحايل *ʔitħaayil* /vi/ to beg, plead. *fiqilt atħaayil ʕala ʃ-ʃawiif ʕaʃaan yifukk ik-kalabʃaat min ʔiday-ya* I kept pleading with the police officer to take off my handcuffs. ‖ *bi-yitħaayil ʕan-noom* he is trying desperately to get to sleep. - ava *mitħaayil*.

احتال *ʔiħtaal* /vi/ **1** to con, practise chicanery. **2** /preverb/ to try hard. *ʔiħtalt axallii yistannaa-k ma-fii-ʃ fayda* I tried in vain to make him wait for you. - vn *ʔiħtiyaal*; ava *miħtaal*.

محتال *miħtaal* /ava/ ‖ *ʔil-ħaal wil-miħtaal* see *ħaal*^{3} under ح و ل .

محتال *muħtaal* /n */ con man, swindler.

ح ى ن^{1}

حان *ħaan (i)* /vi/ to approach, draw near (in time). *ħaan is-safar* the time for departure has come. *lamma yħiin il-ħiin* when the time comes. - ava *ħaayin*.

حين *ħiin* /n pl *ʔaħyaan, ʔaħayiin*/ time, occasion. *fi-baʕḍ il-ʔaħyaan* sometimes. *been kull*^{a} *ħiin wi-miin* ≈ once in a blue moon.

¶ *ʔaħyaanan* /adv/ sometimes. - *li-ħiin ma* /conj/ until. *ʔistanna l-ħiin m-aagi* wait until I come.

حيّن *ħayyin* /vt/ to supply with money. *lamma ʔaqbaḍ ħ-aħayyin-ak* when I get my wages I'll give you some money. - vn *taħyiin*; ava/pva *miħayyin*.

محيّن *miħayyin* /adj */ rich, well-off.

اتحيّن *ʔitħayyin* /vi/ **1** to have ready money. **2** to have one's finances replenished. - ava/iva *mitħayyin*.

¶ *ʔitħayyin il-furṣa* to watch for or seize an opportunity. *dayman bi-yitħayyin il-furaṣ ʕaʃaan yitxaaniq maʕaaya* he's always on the look-out for chances to pick a fight with me.

استحيّن *ʔistaħayyin*↓ /vi/ to have ready money. - ava *mistaħayyin*.

ح ى ن^{2}

حيّاني *ħayyaani: balaħ ħayyaani* a large reddish variety of date, eaten fresh.

ح ى و see ح ى ى

ح ى ى^{1}

حيى *ħiyi (a)* /vi/ to live. *yiħya* (or *yaħya*) *r-rayyis* long live the president! - ava *ħayy*.

حيى *ħaya*^{1} *(i)* /vt/ **1** to give life to, revive, vitalize. *ʔiħyii-ni n-nahar-da w-mawwit-ni bukra [prov]* ≈ sustain me today and you can do what you like with me tomorrow. **2** to perform, stage, put on. *ʔil-firqa ħayit sahriteen* the group gave two evening performances. *bi-yiħyu z-zaar bil-ʔugra* they perform the *zaar* for a fee. - vn *ħaya*; ava *ħaayi*; pva *maħyi*.

حيّ *ħayy*[1] /interj/: *ħayy*[a] *ʕala* ... hasten to ..., as in *ħayy*[a] *ʕala ṣ-ṣalaah [Isl]* come to prayer!

حيّ *ħayy*[2] **1** /adj */ alive, living. *ʔil-misiiħ il-ħayy* the living Christ. *ʒaxiira ħayya* live ammunition. **2** /n/ Living One (epithet of God).

حيّ *ħayy*[3] /n pl *ʔaħyaaʔ*/ **1** quarter, district, neighbourhood. *ħayy*[i] *raaqi* a high-class district. **2** one of the main administrative sectors within an Egyptian city. *ħayy il-ʔazbakiyya* the Ezbekiya district (in Cairo) *raʔiis il-ħayy* administrative head of a sector.

حيّة *ħayya*[1] /n pl *-aat*/ snake, serpent. *ʔilli tuqruṣ-u l-ħayya min del-ha yxaaf [prov]* and *ʔilli tuqruṣ-u l-ħayya yxaaf min garrit il-ħabl [prov]* who has been bitten by a snake fears its tail (or: fears the pulling of a rope). *ʔin ħabbit-ak ħayya ʔiṭṭawwaq biiha [prov]* ≈ cherish an offer of friendship no matter from whom.

حياة *ħaya*[2] /n/ (state of) life. *been il-moot wil-ħaya* between life and death. ‖*bil-ħaya* alive and well, alive and kicking, as in *dafanuu bil-ħaya* they buried him alive, *ya rabb*[i] *xud-ni bil-ħaya* O Lord, take me (now, although I am very much) alive.

حياة *ħayaah* /n, in constr *ħayaat*/ life. *ʔil-muhimm*[i] *ʔinn*[a] *ħayat-ha maʕaa tkuun saʕiida* the important thing is that her life with him should be happy. *ʔana f-ħayaat-i ma-ʃuft*[i]*-ʃ suuʔ ħaẓẓ*[i] *biʃ-ʃakl*[i] *da* all my life I've never seen such bad luck. *ħayaat-u fin-namiima* he thrives on gossip. ‖*ya ħayaat-i* a tender form of address. - *wi-ħyaat* an intensification of the oath particle *wi-*, as in *wi-ħyaat-ak, wi-ħyaat rabb-i-na, wi-ħyaat in-nabi, wi-ħyaat raḥmit ʔabuu-k, wi-ħyaat maqaam il-ħuseen* etc., any of which may be used (1) in polite request, ≈ if you please, as in *wi-ħyaat-ak mumkin tiqul-li s-saaʕa kaam* please, would you tell me the time? (2) in strong affirmation, as in *wi-ħyaat-ak miʃ ħa-taxd-u* you certainly will not take it! (3) as a connection in narrative with little function other than to give a slight emphasis to the following words ≈ whereupon, so, as in *fa-qult-i-lu la muʔaxza ya-bn-i ma-xadt*[i]*-ʃ baal-i mil-ħikaaya wi-ħyaat-ik wi-xadt il-waad ʕala ħigr-i* then I told him, 'Sorry, son, I didn't think of that', and I took the kid on my lap. - *la ħayaata li-man tunaadi*↑ ≈ you're flogging a dead horse.

حيوى *ħayawi* /adj/ vital. *door ħayawi fil-masraħiyya* a vital role in the play. ‖*muḍaddˢ ħayawi* antibiotic.

حيويّة *ħayawiyya* /n/ vitality, vigour.

حيوان *ħayawaan* /pl *-aat*/ **1** /n/ animal. *ʔil-ħayawanaat il-manawiyya* spermatozoa. *gineenit il-ħayawanaat* the zoo. **2** /adj/ beastly, gross (of a person).

حيوانى *ħayawaani* /adj/ pertaining to animals, of animal origin.

حوان *ħiwaan*↓ /n pl *-aat*/ animal.

محيا *maħya* /n/ Sufi dhikr.

حيّا *ħayya*[2] /vt/ to greet, salute. *ħayyi ʔil-ʕalam* salute the colours! ‖*w-ana daaxil ig-gamʕa ħayyeet il-bawwaab bi-sgaara* as I was going into the University, I gave the doorman a cigarette in greeting. - vn *taħiyya*; ava/iva *miħayyi*. See further under [1] ت ح ى

تحيّة *taħiyya* /n pl *-aat, taħaaya*/ **1** salute, greeting. *maʕa taħiyyit if-firka* with the compliments of the company. ‖*ʔit-taħiyyaat [Isl]* that part of the Muslim ritual prayer which contains the creed and invocations of blessing on the prophets and saints. **2** food or drink offered in hospitality to a guest.

حايا *ħaaya* /vt/ *[agric]* to water (a crop) for the first time after the shoots appear. - vn *miħayaah*; ava *miħaayi*.

اتحايا *ʔitħaaya* /vi/ passive of *ħaaya*. - iva *mitħaayi*.

[2] ح ى ى

حياء *ħaya*[3] /n/ **1** diffidence, modesty, politeness. *ʔil-ħaya fir-riggaala ywarris il-faqr [prov]* diffidence in men brings poverty. *qaliil il-ħaya* indecent, shameless. **2** *[rur]* vagina (of a quadruped).

حيّ *ħayy*[4] /adj */ diffident, modest and well-mannered. *walad ħayy*[i] *wi-mrabbi kwayyis* a polite, well brought-up boy.

استحى *ʔistaħa* /vi/ to behave with or feel diffidence or embarrassment. *ʔistaħeet akallim-ha fiʃ-ʃaariʕ* I was too shy to talk to her in the street. *ʔinta ma-b-tistiħii-ʃ* aren't you ashamed of yourself? *ʔilli ma-yistiħi yifʕal ma yiʃtihi [prov]* who feels no shame acts as he pleases. ‖*ʔis-sitt il-mistiħiyya* Cape gooseberry fruit(s). - ava *mistiħi*.

استحيا *ʔistaħya* = *ʔistaħa*. - vn *ʔistiħya*; ava *mistiħyi*.

خ

خ ا
خا *xaa* /fem n/ seventh letter of the Arabic alphabet. ‖ *ʕil-mawḍuʕ-da ʕala ḥarf il-xaa* no one knows if this matter will turn out to be good or bad. - also *xaaʔ, xah*.

خ ا ء
خاء *xaaʔ* /fem n, pl *-aat*/ seventh letter of the Arabic alphabet. - also *xaa, xah*.

خ ا ش
خاش *xaaʃ: yinʕal xaaʃ-ak, yilʕan xaaʃ ʕabuu-k*, etc. ≈ damn you!

[1] خ ا ل
خال *xaal*[1] /n pl *ʕaxwaal, xilaan*/ **1** maternal uncle. **2**↓ familiar form of address to a youngish man.
خالو *xaalu* /n/ affectionate form of address to a maternal uncle. *xaalu ga* uncle came.
خالة *xaala* /n pl *-aat*/ **1** maternal aunt. **2** (also *xalt-i*) affectionate, familiar or respectful title of, and form of address or reference to **2a** a maternal aunt. **2 b**↓ an older woman. **2c** an older woman who is one's social inferior. ‖ *xalt-i ʕanduku* is my aunt here? (said in reference to one who dashes in to ask something and dashes out again as soon as he has the answer without bothering to observe the niceties expected of a visitor).

[2] خ ا ل
خال *xaal*[2] /n/ mole on the cheek, beauty spot.

خ ا م
خام *xaam* <P *khâm*> /adj invar/ **1** raw, unprocessed. *bilastik xaam* raw plastic. *ʕil-ḥadiid il-xaam* iron ore. **2** inexperienced, naive. *di bint[i] xaam lissa gayya mil-balad* she's an inexperienced girl just come from the village.
خامة *xaama* /n pl *-aat*/ **1** raw material. *xamaat iṭ-ṭibaaʕa* printing materials. *ʕil-ʕizaaz maṣnuuʕ min xamaat kitiira* glass is made from many materials. **2** quality, kind, type. *ʕil-xaʃab nafs-u laazim yikuun min xamaat kuwayyisa* the wood itself must be of good quality. ‖ *xamt-u kwayyisa* he's made of good stuff.

خ ا ن
خان *xaan*[1] <P *khân*> /n pl *-aat*/ *[obsol]* caravanserai, bazaar. ‖ *xaan il-xaliili* district of Cairo famous for its tourist bazaars, near el-Azhar mosque.
خانة *xaana* <P *khâna*> /n pl *-aat*/ **1** pigeon-hole (for papers etc.). *fii xaana b-raqam il-ʕooḍa yaaxud iz-zibuun minha l-muftaaḥ* there is a pigeonhole with the room-number on it from which the client takes his key. **2** blank space or box in a form. *ʕimḍi fil-xaana di* sign in this space. **3** *[math]* digit column. *xaanit il-ʕaḥaad* the units column. **4** point of a backgammon board, square on a chessboard or draught-board. ‖ *wiqiʕ fi-xaanit il-yakk* to be trapped totally, be trapped without hope of escape or release. **5** *[mus]* that section of an instrumental piece followed by the refrain. **6** jack on a telephone switchboard.
¶ *-xaana* suffix indicating a house or building, forming quasi-compounds with some nouns. *ʕil-ʕantikxaana* the Egyptian Museum. *ʕil-kutubxaana [obsol]* the Egyptian National Library (later *daar il-kutub*). ‖ *ʕil-muhandisxaana [obsol]* the School of Engineering. - *ʕadabxaana [obsol]* lavatory. - *ʃafaxaana* (1) *[mil]* clinic. (2) *[rur]* animal hospital.

خ ب ء see خ ب ی : *maxbaʔ, maxaabiʔ*

خ ب ث see خ ب س

خ ب ر [1]

خبر *xabar[1]* /vt/ to experience. *xabar il-ɛiifa f-ʕurubba* he experienced life in Europe. - vn *xibra*; ava ***xaabir***.

خبرة *xibra* /n pl *-aat*/ experience. *ɛandu xibra ṭawiila f-masḥ il-ʕaraaḍi* he has had a lot of experience in surveying. *bi-nistawrid xibraat fi-magaal iṣ-ṣinaaɛa* we import expertise in the industrial field.

خبر *xabar[2]* /n pl *ʔaxbaar*/ (item of) news. *diriit bil-xabar* did you hear the news? *xudu ʔaxbar-kum min ṣiɣar-kum [prov]* get the gossip from the children. ‖ *ʔaxbaar-ak ʔeeh* ≈ how are you? how are things? - *ya xabar (ʔiswid* or *ʔabyaḍ)* exclamation of dismayed surprise ≈ good heavens! oh no! as in *ya xabar - ɛamal kida b-ṣaḥiiḥ* oh no! did he really do that? *ya xabar - laqu ṣaraṣiir fil-gatooh* good grief! they found cockroaches in the cakes! - *fi-xabar kaan* over and done with, beyond recall. - *ḥ-aqṭaɛ xabar-ak* or *ḥ-agiib xabar-ak* I'll kill you! I'll finish you! - *ʔaaxir xabar* stop-press, late news. - *la ygiib xabar wala ywaddi xabar* useless, good-for-nothing. - *ʔil-xabar ʔeeh* what's the matter? - ***xabar(-ak) ʔeeh*** (said with irritation) what's up with you?

¶ *ʔidda xabar* to give forewarning, give notice. *ʔiddii-ni xabar qabliiha b-ʔiwayya* let me know a little beforehand. *ʔizzaay tiɣiib min ɣeer ma tiddi xabar* how come you absent yourself without notice?

خبريّة *xabariyya* /n pl *-aat*/ piece of news.

خبير *xabiir* /n pl *xubara*/ **1** expert. *gaabu xubara ʔagaanib yiʔtaɣalu fis-sadd il-ɛaali* they brought foreign experts to work on the High Dam. *da xabiir fiz-ẓarra* he's an atomic expert. **2** (also *xabiir mutammin*) auctioneer.

أخبر *ʔaxbar* /el/ **1** better/best informed. **2** more/most experienced.

مخبر *muxbir* /n */ detective.

إخباريّة *ʔixbariyya* /n pl *-aat*/ (piece of) information passed to, e.g., the press, the police, the relevant authorities.

خبّر *xabbar* /vt/ to tell, inform. *xabbart abuu-k bi-nnina ḥa-nitgawwiz* have you told your father that we're getting married? - vn *taxbiir*; ava *mixabbar*.

مخبّراتي *mixabbaraati* /n pl *-yya*/ tell-tale.

خابر *xaabir* /vt/ to pass on information to. - vn ***mixabra***; ava *mixaabir*.

مخابرة *muxabra* (also *muxabra tilifoniyya*) /n pl *-aat*/ telephone call.

المخابرات *ʔil-muxabaraat* /pl n/ the Bureau of Intelligence, the Secret Service.

اتخابر *ʔitxaabir* /vi/ to be in communication. *ʔil-ɛaskari da txaabir maɛa l-ɛaduw waqt il-ḥarb* that soldier passed on information to the enemy during the war. - ava *mitxaabir*.

اختبر *ʔixtabar* **1** /vt/ to test, assess, try out. *ʔil-xuṭuuba ɛaʕaan il-maxṭubiin yixtibru baɛḍ* the engagement period is for the couple to get to know each other. **2** /vi/ to have a deep spiritual experience. - vn *ʔixtibaar*; ava *mixtibir*.

اختبار *ʔixtibaar* /n pl *-aat*/ **1** test, examination. *ʔixtibaar siwaaqa* driving test. *bi-yiɛmilu xtibaar li-kull[i] ṭaalib* they give each student a test. *taḥt il-ixtibaar* on probation, under surveillance or observation, on trial. **2** spiritual or mystical experience.

استخبر *ʔistaxbar* /vi/ to inquire, make inquiries. - vn *ʔistixbaar*; ava *mistaxbar*.

خ ب ر [2]

see خ ب و ر: ***xabuur***

خ ب ز [1]

خبز *xabaz (i)* **1** /vt/ to bake (especially bread). ‖ *ʔana ɛagn-u w-xabz-u* I know him inside out. **2** /vi/ to bake bread. *bi-nixbiz kull[i] ʔusbuuɛ* we bake bread every week. - vn *xabiiz, xabz*; ava ***xaabiz***; pva *maxbuuz*.

خبّاز *xabbaaz* /n */ baker. ‖ *ʔiddi l-ɛeef li-xabbaziin-u wa-law yaklu nuṣṣ-u [prov]* (give the bread to those who know how to bake it, even if they eat half of it) ≈ have it done by an expert even if it costs more.

مخبز *maxbaz* /n pl *maxaabiz*/ bakery.

اتخبز *ʔitxabaz* /vi/ to be baked (especially of bread). *qabl il-ɛeef ma yitxibiz bi-yḥuṭṭu ɛalee simsim* before the bread is baked they put sesame on it. - iva *mitxibiz*.

انخبز *ʔinxabaz* = *ʔitxabaz*. - iva *minxibiz*.

خ ب ز [2]

خبّيزة *xubbeeza* **1** /coll n/ mallow(s). **2** /n/ *[obsol]* brothel.

خ ب س

خبث *xubs* /n/ **1** deceitful cunning, deviousness, wiliness. **2** defilement. *ʔaɛuuzu bi-llaah mil-xubs[i] wil-xabaayis* Lord protect me from all defilements (uttered notably when entering the lavatory).

خبث *xabas↑* /n/ evil. *ʔil-xamra xabas* alcoholic drinks are a vice.

أخبث *ʔaxbas* /el/ **1** more/most cunning, devious or deceitful. **2** more/most wicked.

خبيث *xabiis* /adj pl *xubasa*/ **1** deceitful, cunning, wily. *ya xabiis* you snake-in-the-grass! **2** *[path]* malignant. *waram xabiis* malignant tumour.

خبيثة *xabiisa* /n pl *xabaayis, xabaaʔis↑*/ vice, sin. *ʔil-xamra ʔumm il-xabaayis* liquor is the root of all vices.

اتخابس ʃitxaabis /vi/ to act cunningly, behave deceitfully. - ava *mitxaabis*.

خ ب ص

خبص *xabaṣ (u)* /vi/ **1** *[deris]* to tattle, inform. *ḥa-yuxbuṣ ɛaleek law geet miʃaxxar* he'll tell on you if you come late. **2** to practise deceit or trickery. *xabaṣ ɛaleena* he tricked us. **3** to intrigue. *miraat-u dayman tixbuṣ been ig-giraan* his wife is always setting the neighbours at odds with one another. **4** to philander. - vn *xabṣ*; ava *xaabiṣ*.

خبص *xabṣ* /n/ **1** deceit, fabrication. ‖ *ʃil-xabṣ[i] wil-labṣ* wiliness, deviousness, monkey-business, as in *baṭṭal ʃil-xabṣ[i] wil-labṣ[i] wil-laff[i] wid-dawaraan bitaaɛ-ak da* stop this deviousness and beating about the bush of yours, *ma-fiif ḥadd[i] ɛayyu fil-xabṣ[i] wil-labṣ* no one can tell tall stories the way he can. **2** philandering.

خبصة *xabṣa* /inst n, pl *-aat*/ a lie, a deception, a slanderous tale.

خبيصة *xabiiṣa* /n/ **1** concoction, mixture. **2** mess.

خبّاص *xabbaaṣ* /adj */ **1** lying, devious. **2** tell-tale. **3** philanderer.

خبّص *xabbaṣ* /vt/ to press, squeeze, squash together. *xabbaṣit il-ɛagiina* she kneaded the dough. ‖ *ma-txabbaṣ-ʃ iz-zarɛ* don't trample on the plants! - vn *taxbiiṣ*; ava/pva *mixabbaṣ*.

اتخبّص ʃitxabbaṣ /vi/ to be pressed or squeezed, be squashed together. - iva *mitxabbaṣ*.

خ ب ط

خبط *xabaṭ (a)* /vt/ **1** to hit, strike. *xabaṭ il-waad bil-ɛarabiyya* he hit the kid with the car. *xabaṭ-u ɢalam* he gave him a slap. ‖ *xabaṭ bi-kalaam* to address brusquely, as in *ma-tixbaṭ-nii-ʃ bi-kalaam-ak* don't use such hard words with me! - *xabaṭ miʃwaar* to go on a (long, tiresome) errand or journey. - *xabṭ[i] lazɢ* abruptly, without beating about the bush, as in *ɢaal xabṭ[i] lazɢ innaha maatit* he blurted out that she had died, *xuff[i] fil-mawɢuuɛ xabṭ[i] lazɢ* come right to the point! **2** to appropriate. *xabaṭ xabṭa kbiira* he landed a good deal, he made a killing. *xabaṭ il-filuus* he pocketed the money, he knocked off the money. — /vi/ **3** to rattle, knock, bang. *ʃil-baab xabaṭ* (1) the door banged. (2) there was a knock at the door. - vn *xabṭ*; ava *xaabiṭ*; pva *maxbuuṭ*.

خبطة *xabṭa* /inst n, pl *-aat*/ **1** a knock, a blow. *xabṭiteen fir-raas tiwgaɛ [prov]* (two blows on the head hurt) ≈ one disaster can be endured, two are almost unbearable. **2** a coup. *xabṭa ṣaḥafiyya* a journalistic scoop. *xabṭa ʃaṣiila* a real coup. *xabṭit miɛallim* a master-stroke.

اتخبط ʃitxabaṭ /vi/ **1** to be hit or hit oneself, be knocked or knock oneself. *ɢarabiyyit-i txabaṭit min wara* my car was run into from behind. *ʃil-markib itxabaṭit fir-raṣiif* the ship struck the quay. ‖ *ʃin ʃa-lla ʃatxibiṭ fi-naẓar-i law* ... may I be struck blind if ... (as a disclaimer). - *da ʃakiid itxabaṭ fi-dmaaʏ-u ɢaʃaan yiṣarraf biʃ-ʃakl[i] da* he surely must be off his rocker to act like this. **2** to be appropriated. - ava/iva *mitxibiṭ*.

انخبط ʃinxabaṭ = ʃitxabaṭ. - ava/iva *minxibiṭ*.

خبّط *xabbaṭ* /vi/ **1** to give a series of knocks. *xabbaṭ ɢal-baab* he knocked at the door. ‖ *bi-yxabbaṭu maɢa baɢḍ[i] fil-kalaam* they bandy words with each other. **2** to emit a knocking sound. *ʃil-mutoor bi-yxabbaṭ* the engine is knocking. *ʃil-baab bi-yxabbaṭ* there's a knock at the door. **3** to behave confusedly, grope. *siib-u yxabbaṭ* let him blunder around, leave him in his confusion! - vn *taxbiiṭ*; ava/pva *mixabbaṭ*.

اتخبّط ʃitxabbaṭ /vi/ **1** to be hit, be knocked, be bumped. **2** to speak confusedly. *lamma txabbaṭ fi-kalaam-u ɢabaḍ ɢalee l-buliiṣ* when he gave contradictory statements the police arrested him. - ava/iva *mitxabbaṭ*.

خ ب ل [1]

خبل *xabal[1] (i)* /vt/ to stupefy. *yuuh - ʃil-fustaan da yixbil* my! that's a stunning dress! *ʃil-bint[i] xabalit-ni* the girl made me flip. - vn *xabal*; ava *xaabil*; pva *maxbuul*.

خبل *xabal[2]* /n/ lunacy. *ɢandu xabal* he's crazy.

اتخبل ʃitxabal /vi/ to be stupefied. - iva *mitxibil*.

انخبل ʃinxabal = ʃitxabal. - iva *minxibil*.

خبّل *xabbil* /vt/ to make a mess of, spoil. *ʃiṭ-ṭabbaax xabbil il-ʃakl* the cook ruined the food. *ʃinti xabbilti il-waad* you spoiled the boy. - vn *taxbiil*; ava/pva *mixabbil*.

خ ب ل [2]

خبل *xabal[3]* /coll n/ barnacles and seaweed etc. encrusted on the bottom of a boat.

خ ب و ر

خابور *xabuur* /n pl *xawabiir*/ wedge, wooden peg or plug. ‖ *xabuur mixarri* (1) a nasty trick. (2) a tight spot, a nasty situation.

خ ب ى

خبى *xiba* /n/ **1** seclusion, hiding. *ɢaaɢid fil-xiba* (he is) hiding himself away. *ʃil-ɢumaaʃ iṣfarr[i] min kutr il-xiba* the fabric turned yellow from being stored away so long. **2** secluded quarters for bedouin women.

خبايا *xabaaya* /pl n/ hidden things, secrets, intricacies. *huwwa ɛaarif kull[i] xabaaya l-qiṣṣa* he knows all the ins and outs of the story.

خابية *xabya* /n pl *-aat, xawaabi/* large jar, vat.

مخبأ *maxbaʕ* /n pl *maxaabiʕ/* air-raid shelter.

خبّى *xabba* /vt/ to conceal, hide. *kaan mixabbi l-musaddas taḥt il-maxadda* he was hiding the gun under the pillow. *bi-txabbi ɛanni kull[a] ḥaaga* she hides everything from me. *ʕinta bi-txabbi ɛala mraat-ak* are you hiding your affairs from your wife? - vn *taxbiyya*; ava/pva *mixabbi*.

اتخبّى *ʔitxabba* /vi/ **1** to be hidden. **2** to hide oneself. - ava/iva *mitxabbi*.

استخبّى *ʔistaxabba* /vi/ **1** to hide oneself. *ʔistaxabbeet minni leeh* why did you hide from me? ‖ *sitt[i] mistaxabbiyya* Cape gooseberry fruit(s). **2** to become hidden. *misiir il-mistaxabbi ybaan* hidden truths come out. *rabb-i-na yikfii-na ʃarr il-mistaxabbi [prov]* may God protect us from the evil of the unknown. - ava/iva *mistaxabbi*.

خ ت م

ختم *xatam (i)* /vt/ **1a** to stamp. *ʔiṣ-ṣarraaf bi-yixtim-lu l-waṣl* the cashier stamps the receipt for him. **1b** to seal. **2** to conclude, finish (a reading, recitation etc.). *xatam il-qiṣṣa* he finished the story. *w-axtim kalaam-i biṣ-ṣalaatu ɛan-nabi* and I finish my tale by blessing the Prophet (closing formula used by narrators of popular epics). ‖ *xatam iṣ-ṣala* to follow the Muslim ritual prayer with certain prescribed devotional formulae. - *xatam il-qurʔaan* (1) to recite the entire Koran at a *xatma* (q.v.). (2) to complete one's memorization of the Koran. **3** to pin down (an opponent's shoulders, in wrestling). – /vi/ **4** to be completed, be finished. ‖ *ʔahi xatamit* and that's the last straw! **5a** to heal over, close (of a wound). *ʔig-garḥ[i] xatam* the wound healed over. **5b** to form a skin (of fluids such as milk). - vn *xatamaan, xatm, xitaam-* ava *xaatim*; pva *maxtuum*.

ختم *xatm* /n pl *xawaatim/ [coarse]* arsehole, anus.

ختمة *xatma[1]* /n pl *-aat/* evening ceremony held at the time of a death or of a happy event, or in fulfilment of a vow, the main feature of which is the recitation of the entire Koran.

الختمة *il-xatma, ʔil-xitma*↓ /n/ Koran. *wil-xatma f-ʃariifa* by the Holy Koran!

ختام *xitaam* /n/ ending, conclusion. *ʔaḥsan* (or *misk il-*) *xitaam* the best of endings, as in *ʔin ʃa-lla f-fuṷla titxitim ʔaḥsan xitaam* let's hope the work reaches the most successful possible conclusion. ‖ *ʔil-xitaam iṣ-ṣuṷayyar* the memorization of the thirtieth, twenty-ninth, and twenty-eighth parts of the Koran. - *ʔil-xitaam ik-kibiir* the memorization of the complete Koran.

ختامى *xitaami* /adj/ final, concluding. *ʔil-maʃhad il-xitaami* the final scene.

خاتم *xaatim* /n pl *xawaatim/* **1** finger ring more elaborate than a plain band (cf *dibla*). ‖ *xaatim sulaymaan* the seal of Solomon. *-ʃaɛr[i] xawaatim* curly hair. *-makaroona xawaatim* macaroni. *-faḍḍ il-xaatim* de-flowering (on the occasion of marriage-consummation). **2** motif in tent appliqué designs (see Pl.H, 18). **3** anus.

خاتم *xaatam: xaatam il-ʔanbiya* the last of the prophets (epithet of the Prophet Muhammad).

خاتمة *xatma, xaatima*↑ /n pl *xawaatim/* end, conclusion. *ʔil-ʔumuur bi-xawatim-ha* all's well that ends well.

ختم *xitm* /n pl *ʔaxtaam, xitaam/* **1** stamp. *xitm[i] tariix* date stamp. **2** seal. *xitm ig-gumhuriyya* the Seal of the Republic. ‖ *ḥaṭṭ[i] xitm(-u) ɛala [abuṣ]* to set one's seal on, label as one's own (without right), as in *manaɛ-ak tiʃrab leeh - huwwa ḥaṭṭ[i] xitm-u ɛal-ḥanafiyya* why won't he let you drink? - has he staked a claim on the tap?

ختّام *xattaam* /n */ employee whose function is related to stamping operations (e.g., policeman in charge of finger-printing suspects, employee who stamps grades on carcasses in a slaughterhouse).

ختّامة *xattaama* /n pl *-aat/* ink pad.

اتختم *ʔitxatam* /vi/ **1** to be stamped. *ʔitxatam bil-maqbuul* it has been stamped Approved. **2** to be sealed. **3** to end, come to an end. - ava/iva *mitxitim*.

انختم *ʔinxatam* = *ʔitxatam*. - ava/iva *minxitim*.

خ ت ن

ختن *xatan (i)* /vt/ to circumcise. - vn *xitaan*↑; ava *xaatin*; pva *maxtuun*.

ختان *xitaan*↑ /n/ circumcision.

ختّن *xattin* /vt/ to inoculate, vaccinate. - vn *taxtiin*; ava/pva *mixattin*.

اتختّن *ʔitxattin* /vi/ to be inoculated, be vaccinated. - iva *mitxattin*.

خ ج ل

خجل *xigil (a)* /vi/ to become shy or embarrassed. *xigilt[i] lamma smiɛt in-nukta* I was embarrassed when I heard the joke. - vn *xagal*; ava *xaglaan*.

خجول *xaguul* /adj */ bashful, shy.

خجّل *xaggil* /vt/ to embarrass, put to shame. - vn *taxgiil*; ava *mixaggil*.

أخجل *ʔaxgal* /vt/ to embarrass, put to shame. ‖ *ʔaxgaltum tawaquɛ-na* you've embarrassed me,

you've made me feel unworthy of your praise.

خ د see ء خ د : *xad, xud*

خ د د
خدّ *xadd* /n pl *xuduud*/ **1** cheek. *ʕala xadd-u ʃaama* on his cheek is a mole. ‖*ʕamal li-... xadd-u madaas* (to make one's cheek a stepping place for ...) to treat with the utmost deference. ‖*ʃaḥmar xuduud* rouge. **2** *[naut]* one of the two supporting blocks (partners) at the foot of a mast.
خدّيّة *xudadiyya* or *xududiyya* /n pl *-aat*/ small pillow, cushion.
مخدّة *mixadda* /n pl *-aat*/ **1** pillow, cushion. **2** *[elec]* armature coil. **3** *[arch]* pile-cap.

خ د د و ج
خدّوجة *xadduuga* /n pl *xadadiig*/ pair of cross-thonged sandals.

[1] خ د ر
خدّر *xaddar* /vt/ **1** to drug. *duktuur il-bing[i] bi-yxaddar il-mariiḍ qabl ig-giraaḥa* the anaesthetist anaesthetizes the patient before surgery. *ʃil-ḥaʃiiʃ bi-yxaddar* hashish has a drugging effect. **2** to lull into a false sense of security. - vn *taxdiir*; ava/pva *mixaddar*; ava *muxaddir*↑.
مخدّرات *muxaddaraat[1]* /pl n/ drugs, narcotics. *mukafḥit il-muxaddaraat* Narcotics Division (of a police department).
اتخدّر *ʃitxaddar* /vi/ to be drugged. - iva *mitxaddar*.

[2] خ د ر
مخدّرات *muxaddaraat[2]* /fem pl adj/: *ʃis-sittaat il-muxaddaraat*↓ aristocratic women sheltered and protected from hardship.

خ د ش
خدش *xadaʃ (i)* /vt/ to scratch. *ʃil-luuri xadaʃ ʒarabiyyit-i* the truck scratched my car. ‖*ʃayy[i] kilma mumkin tixdiʃ sumʕit-ha* anything can damage her reputation. - vn *xadʃ*; ava *xaadiʃ*; pva *maxduuʃ*.
خدش *xadʃ* /n pl *xuduuʃ*/ scratch.
خدشة *xadʃa* /inst n, pl *-aat*/ a (single) scratch.
اتخدش *ʃitxadaʃ* /vt/ to be scratched. - iva *mitxidiʃ*.
انخدش *ʃinxadaʃ* = *ʃitxadaʃ*. - iva *minxidiʃ*.
خدّش *xaddiʃ* /vt/ to scratch repeatedly, make scratches on. *ma-txalliiʃ il-quṭṭa txaddiʃ il-mubilya* don't let the cat scratch the furniture. *ʃil-bistim il-qadiim xaddiʃ is-silindar* the old piston made scratches on the cylinder. - vn *taxdiiʃ*; ava/pva *mixaddiʃ*.
اتخدّش *ʃitxaddiʃ* /vi/ to be scratched repeatedly or extensively. - iva *mitxaddiʃ*.

[1] خ د ع
خدع *xadaʕ (a)* /vt/ to trick, deceive. *xadaʕna l-ʕaduw bi-munawraat* we took the enemy in with manoeuvres. ‖*ʃil-ḥarb[i] xidʕa [prov]* ≈ all's fair in war. ‖*ʃarbaab il-xidaaʕ [obsol]* politicians. - vn *xidaaʕ, xidʕa*; ava *xaadiʕ*; pva *maxduuʕ*.
خدعة *xidʕa* /n pl *xidaʕ*/ deception, swindle, trick, bluff. ‖*xidʕa sinima ʃiyya* gimmick, trick photography in cinema.
خديعة *xadiiʕa* /n pl *xadaayiʕ*/ deceit, treachery.
خدّاع *xaddaaʕ* /adj */ deceitful, deceptive (of s.o. or s.th.).
انخدع *ʃinxadaʕ* /vi/ to be tricked, be taken in. *ʃin-naas il-busaṭa b-yinxidʕu bil-ḥiyal il-basiiṭa* simple people are deceived by simple tricks. - iva *minxidiʕ*.
اتخدع *ʃitxadaʕ* = *ʃinxadaʕ*. - iva *mitxidiʕ*.

[2] خ د ع
خدّع *xaddaʕ* /vt/ *[cook]* to cook (fried onions) in tomato purée. - vn *taxdiiʕ*; ava/pva *mixaddaʕ*.
تخذيعة *taxdiiʕa* /n/ fried onions cooked with puréed tomatoes (a basic constituent of many Egyptian dishes).
اتخدّع *ʃitxaddaʕ* /vi/ *[cook]* (of onions) to be fried and then cooked in tomato purée. - iva *mitxaddaʕ*.

[3] خ د ع
مخدع *maxdaʕ*↑ /n pl *maxaadiʕ*/ sleeping-place. ‖*mara maxdaʕ*↓ voluptuous woman.

خ د ل
خدل *xidil (a)* /vi/ to become numb. *rigl-i xidlit* my leg went numb. ‖*ma-b-yixdal-ʃ* (1) he is always nagging. (2) he is always going places. - *ʒayy ir-rigl il-xadlaana [deris]* useless (like a numb leg). - vn *xadalaan*; ava *xadlaan*.
خدّل *xaddil* **1** /vt/ to numb. *tuql if-ʃanṭa xaddil kitf-i* the weight of the bag numbed my shoulder. **2** /vi/ to become numb. *rigl-i xaddilit min kutr il-quʕaad* my leg became numb from so much sitting. - vn *taxdiil*; ava/pva *mixaddil*.

خ د م
خدم *xadam[1] (i)* /vt/ **1a** to serve, wait on. *ʃis-suʕaah illi b-yixdimu l-muwaẓẓafiin* the messengers who serve the employees. *ʃaxrit xidmit il-ʏuzz[a] ʕalqa [prov]* the up-

shot of serving a Turk is a beating (said when one gets ingratitude in return for a service). **1b** to do (s.o.) a favour, perform a service for. *ʕana ḥ-axdim-ak fi-taɛyiin ibn-ak* I will do what I can for you to get your son appointed. **1c** to support, strengthen. *bi-ynaqqi ṣ-ṣuwar illi b-tixdim il-maqaal* he picks the illustrations that best back up the article. **2** to work (s.th.) with due care and skill, manipulate (skilfully) by labour. *xadamt il-xaʃab biz-zeet* I gave the wood the oiling it needed. *xidmit il-ʕarḍ* working the land. *ʕintaag maṣr[i] kwayyis bass illi yixdim-u laazim yikuun daqiiq* the Egyptian (product) is all right, but the one who works with it has to be nifty. — /vi/ **3** to serve, do service. *xadam fig-geeʃ* he served in the army. *malaff il-xidma* the employment record. **4** to be of use. *ʕiʃ-fuxl[i] da ma-yixdim-ʃ* this work is useless! - vn *xidma*; ava *xaadim*; pva *maxduum*.

خدمة *xidma* /n pl *xadamaat*/ **1** service. *yilzam (ʕayy[i]) xidma* is there anything I can do for you? *xidma ɛaskariyya* military service. ‖ *ʕayy[i] xidma* (1) is there anything more I can do for you? (2) at your service! **2** *[Chr]* (organized) meeting or service in church. — /no pl/ **3** *[Isl]* **3a** distribution of free food and drink at the time of *muulid* (q.v.) celebrations. **3b** food and drink so distributed.

خادم *xaadim* /n pl *xuddaam*/ **1** mosque custodian, mosque janitor. **2** *[Chr]* lay worker, volunteer worker in a church. **3** *[frozen contexts]* one who serves, servitor, servant. *sayyid il-ɋoom xadim-hum [prov]* the lord of the people is their servant. *xaadim ir-rabb* or *xaadim il-ʕingiil [Chr]* form of reference to a Protestant minister. *xuddaam l-ism [magic]* spirits assigned to certain roles.

مخدوم *maxduum*↑ /n */ employer, master.

خدم *xadam*[2] /coll n/ servants, attendants. *sillim il-xadam* the servants' stairs. ‖ *xadam wi-ḥaʃam* servants and followers-on, entourage.

خدوم *xaduum* /adj */ helpful, obliging (of a person).

خدّام *xaddaam* /n */ male servant. *xaddaam-ak ya beeh* (I'm) your servant, Sir!

خدّامة *xaddaama* /n pl *-aat*/ female servant, maid.

اتخدم *ʕitxadam* /vi/ passive of *xadam*. - iva *mitxidim*.

انخدم *ʕinxadam* = *ʕitxadam*. - iva *minxidim*.

خدّم *xaddim* /vt/ **1** to find employment for, put to work. *huwwa bi-yxaddim if-faɤɤaliin fil-biyuut* he finds jobs for servants in private houses. *xaddimt-u ɛand[a] ɛamm-i* I got him work at my uncle's. *maktab taxdiim* domestic employment agency. **2** to bring into direct contact, make even or level. *xaddim il-maktab ɛala l-ḥeeṭa* put the desk flush against the wall. **3** to cause to serve. *ṭuul ma huwwa ɋaaɛid bi-yxaddim illi ḥawalee* all the while he's sitting there he keeps people around him busy. — /vi/ **4** to come into direct contact, meet properly. *ʕit-tirseen ma-bi-yxaddimuu-ʃ maɛa baɛḍ* the two cogs don't mesh. - vn *taxdiim*; ava *mixaddim*.

¶ *xaddim ɛala* to serve. *xaddim ɛaḍ-ḍuyuuf il-ʕawwil* serve the guests first.

مخدّم *mixaddim, muxaddim*↑ /n */ = *mixaddimaati*.

مخدّماتي *mixaddimaati* or *mixaddamaati* /n pl *-yya*/ employment agent for domestic help.

اتخدّم *ʕitxaddim* /vi/ passive of *xaddim*. - iva *mitxaddim*.

استخدم *ʕistaxdim* **1**↑ /vt/ to make use of. *ʕiʃ-ʃeex bi-yiɛraf yistaxdim ig-ginn* the sheikh knows how to use the jinn (to serve him). - /the literary passive form occurs frequently in elevated speech/ *da n-nooɛ illi b-yustaxdam fil-maktab* that's the type used in the office. **2**↓ /vi/ to take up employment. *balaaʃ tistaxdim fil-ḥukuuma* don't work for the government. - vn *ʕistixdaam*; ava/pva *mistaxdim*; pva *mustaxdam*.

مستخدمين *mustaxdimiin* /pl n/ personnel. *mudiir il-mustaxdimiin* personnel manager.

خ د ي و ى

خديوى *xideewi* <P *khidev*> **1** /n */ Khedive. **2** /adj */ pertaining to a Khedive.

خ ذ ل

see [2] خ ز ل

[1] خ ر ا

خرا، خره *xara[1]* (also *xara sinnu*) <perh Copt> **1** /n/ children's ball game. **2** /interj/ call marking first serve of the game where the ball is served backwards over the head or shoulder.

[2] خ ر ا

see [1] خ ر ى : *xara*[2]

[1] خ ر ب

خرب *xirib, xurub (a)* /vi/ **1** to be destroyed, be ruined. *bahayim-hum maatit wi-byut-hum xirbit* (their animals died and their houses fell to ruin) they were hit by total disaster. **2** to cease to function, go out of order. *ʕil-makana xirbit fagʕa* the machine suddenly conked out. *ʕil-ʕasanseer xarbaan* the lift is out of order. - vn *xaraab*; ava *xarbaan*.

خرب *xarab (i)* /vt/ to destroy, ruin. *fii ḥadd[i] yixrib beet-u b-ʕiid-u* would anyone deliberately bring ruin upon himself? ‖ *(ʕallaah) yixrib beet-ak* ≈ (God) damn you! (used as a curse but also to denote surprise or wonder). - *ʕallaah la yixrib-lak beet [beggars]* may God not destroy your home! - *(ʕallaah) yixrib ɛaql-ak* exclamation of affectionate amusement ≈ you're a riot!

what a devil you are! - *xarab-ha w-qaɛad ɛala tall-a-ha* he ruined it and sat (in satisfaction) on the mound of ruins. - *ʔasiib il-maxruub il-beet da* I'll leave this blasted house! - vn *xarabaan, xaraab*; ava *xaarib*; pva *maxruub*.

خراب *xaraab* /n/ destruction, ruin. ‖*ya xaraab-i* (also, euphemistically, *ya xaraaf-i*) exclamation of dismay or despair ≈ woe is me! ‖*moot wi-xaraab diyaar [prov]* death and destruction, complete devastation. - *xaraab malʈa* total destruction, the end of the world. *gayy*^{i} *tquul-li baɛd*^{i} *xaraab malʈa* is it now that you tell me (after it's too late)!

خرابة *xaraaba* /n pl *-aat, xaraayib/* piece of waste ground. ‖*luu fi-kull*^{i} *xaraaba ɛafriit [prov]* (he has a demon in every piece of waste ground) (1) he has friends everywhere, he has lots of influence. (2) he is very suspicious, he is full of fears.

خروبة *xaruuba* /n/ space between rails on a railway track.

اتخرب *ʔitxarab* /vi/ to be destroyed, be ruined. ‖*ʔitxarab geb-u* to go broke. - iva *mitxirib*.

خرّب *xarrab* /vt/ **1** to ruin, destroy. *ʔil-ɛiyaal xarrabu l-liɛab kull-a-ha* the kids have ruined all their toys. **2** to sabotage. - vn *taxriib*; ava/pva *mixarrab*.

اتخرّب *ʔitxarrab* /vi/ **1** to be ruined, be destroyed. **2** to be sabotaged. - iva *mitxarrab*.

خ ر ب ²

خرّوب *xarruub* /coll n/ carob(s). *ʔayyaam ʔaswad min ɋarn il-xarruub [prov]* days blacker than a carob pod.

خرّوبة *xarruuba* /n pl *-aat/* unit of volume equal to one sixteenth of an *ɋadaḥ* or 0.129 litres.

خ ر ب ش

خربش *xarbiʃ* /vt/ **1** to scratch. *ʔil-ɋuʈʈ*^{i} *xarbiʃ-ni* the cat scratched me. **2** to scrawl, scribble. *xarbiʃ ʔimḍit-u* he scribbled his signature. — /vi/ **3** to scratch, be scratchy. *bi-ynaɛɛam il-xaʃab ɛaʃaan ma-yxarbiʃ-ʃ* he smooths the wood so that it won't scratch. - vn *xarbaʃa*; ava/pva *mixarbiʃ*.

مخربش *mixarbiʃ* /adj */ *[slang]* on-the-ball, aware and alert.

خربوش *xarbuuʃ = xarbuuʃa*.

خربوشة *xarbuuʃa* /n pl *xarabiiʃ/* **1** scratch mark, claw mark. **2** scribble, scrawl.

اتخربش *ʔitxarbiʃ* /vi/ to be or become scratched. - ava/iva *mitxarbiʃ*.

خ ر ب ق

خربق *xarbaq* /vt/ to ruin, wreck, destroy. *ʔil-makana mxarbaɋa xaaliṣ* the machine is completely wrecked. - vn *xarbaɋa*; ava/pva *mixarbaq*.

اتخربق *ʔitxarbaq* /vi/ to be ruined, be wrecked, be destroyed. - iva *mitxarbaq*.

خ ر ت ى ت

خرتيت *xartiit* /n/ **1** /coll/ rhinoceros(es). **2** /pl *xaratiit/* rhinoceros.

خ ر ج

خرج *xarag*^{1} *(u)* /vi/ **1** to go out, leave. *ʔuxrug barra* get out! *ʔil-bitt*^{i} *di ma-lhaa-ʃ xuruug mil-beet ʔabadan* this girl isn't allowed to leave the house ever. ‖*ʔil-ḥikaaya xaragit min ʔiid-i* the matter passed out of my control. - *baʈn-u xaragit* he defecated. - *kalaam xaarig (ɛan ḥadd il-ʔadab)* improper, impolite or ill-mannered language or talk. - *ʔid-daxla wil-xarga* the ins and outs, the details, as in *laazim tiɛraf id-daxla wil-xarga* do you have to know the ins and outs of it all? **2** to project, jut out. - vn *xuruug*; ava *xaarig*.

¶ *xarag wara* to follow (a bier) to the cemetery, walk in the funeral procession of. - *xarag ɛan* to break with the authority of. *ʔibn-i xarag ɛan ʈooɛ-i* my son no longer obeys me. *xaarig ɛan il-qanuun* an outlaw. *xarag ɛan il-xaʈʈ* (1) to become derailed. (2) to deviate.

خرج *xarag*^{2} *(i)* /vt/ **1** to put outside. *ʔixrig il-karaasi fil-balakoona* take the chairs out onto the balcony. **2** to extract (e.g., essences). - vn *xarg, xaragaan*; ava *mixrig*; pva *maxruug*.

خروج *xuruug* /vn/ exit. ‖*sifr il-xuruug* the Book of Exodus.

خروجة *xuruuga* /inst n, pl *-aat/* an outing.

خرج *xarg* /n/ yield, essence, turnout, produce. ‖*xarg in-nagaf* drop-shaped glass or crystal beads. - *ɛaff*^{i} *xarg*^{i} *beet* second-hand furniture. - *sitt*^{i} *xarg*^{i} *beet* a second-rate woman.

خرجة *xarga* /n pl *-aat/* **1** funeral procession. **2** protrusion, projection.

خارج *xaarig* **1** /prep/ **1a** on the outer surface of. *raakib xaarig il-makana* mounted on the outside of the machine. **1b** in the space surrounding. *waaqif xaarig il-murabbaɛ* standing outside the square. **2** *ʔil-xaarig* /n/ **2a** the outer surface, the exterior. *mitwassax min il-xaarig* soiled on the outside. **2b** the outside world, abroad. *ʔana msaafir il-xaarig* I'm going abroad.

الخارجة *ʔil-xarga* /prop n/ oasis in the Western Desert, situated between the Nile at Luxor and the Dakhla oasis.

خارجى *xaarigi* /adj */ **1** outer, external. *ʔil-ʔagnaab*

il-xaarigiyya the outer surfaces. *ʕizaaɛa xaarigiyya* outside broadcasting. *xaṭṭ[i] xaarigi* outside (telephone) line. ‖*mukalma xaarigiyya* overseas call. **2** pertaining to what is foreign. *ʕif-ʃuʕuun il-xaarigiyya* foreign affairs. *ɛilaqaat xaarigiyya* foreign relations.

الخارجيّة *ʕil-xaarigiyya* (also *wizaarit il-xaarigiyya*) /n/ the Ministry of Foreign Affairs. *waziir il-xaarigiyya* the Minister of Foreign Affairs.

خرج *xurg* /n pl *ʕaxraag*/ cloth saddlebag. *rakkibt-ak waraaya saraɋt il-ɛeef mil-xurg [prov]* ≈ you bit the hand that fed you. ‖*raagil xurg* a useless, feckless or inept fellow. - *ħaaga tfawwit il-ɛaṭṭaar xurg-u* ≈ a thoroughly exasperating matter.

خرّاج *xurraag* /n pl *xararriig*/ abscess.

خريج *xirriig, xarriig* /n */ graduate.

مخرج *maxrag* /n pl *maxaarig*/ **1** outlet, exit. *maxrag il-ɛaadim [mech]* exhaust outlet. **2** *[ling]* point of articulation.

خرّج *xarrag* /vt/ **1** to take out, let out, send out. *bint-i ma-txarrag-haa-ʃ mil-beet ɣeer lamma tgiib ʃabka* you won't be taking my daughter out of the house till you've brought an engagement present! *xarraguu-ni mil-mustaffa* they discharged me from hospital. *xarragt-a-ha min ɋalb-i* I drove her from my heart. *ʕana ħ-axarrag-ik xuruuga ħilwa yoom il-xamiis* I will take you for a nice outing on Thursday. **2** to (cause to) graduate. *ʕig-gamɛa xarragit kaam duktuur* how many doctors did the university graduate? - vn *taxriig*; ava/pva *mixarrag*.

تخريجة *taxriiga* /n pl *-aat*/ solution, way out, contrived justification.

اتخرّج *ʕitxarrag* /vi/ passive of *xarrag*. - vn *taxarrug*; ava *mitxarrag, mutaxarrig*↑.

تخرّج *taxarrug* /n/ graduation (from, e.g., a university). *ħaflit taxarrug* graduation ceremony.

أخرج *ʕaxrag* /vt/ to direct (a play, film etc.). *miin ʕaxrag il-masraħiyya* who directed the play? - vn *ʕixraag*; ava *muxrig*.

مخرج *muxrig* /n */ director (in cinema, theatre, radio etc.).

استخرج *ʕistaxrag, ʕistaxrig* /vt/ **1** to extract. *bi-yistaxragu l-fusfaat min il-manaagim* they extract phosphates from the mines. **2** to procure by application. *laazim tidfaɛ damɣa ɛaʃaan tistaxrag if-fihaada* you have to pay for a fiscal stamp before you can procure the certificate. - vn *ʕistixraag*; ava *mistaxrag*; pva *mustaxrag*.

مستخرج *mustaxrag* /n pl *-aat*/ copy of a document. *mustaxrag rasmi min ʃihaadit milaad* an official copy of a birth certificate.

خ ر خ ر

خرخر *xarxar* /vi/ to leak continuously, trickle. *ʕil-mayya xarxarit ṭuul is-sikka* the water leaked all along the way. - vn *xarxara*; ava *mixarxar*.

خ ر خ ش

خرخش *xarxiʃ, xarxaʃ* **1** /vt/ to make hoarse. *ʕil-bard[i] xarxiʃ ṣoot-i* the cold has made my voice hoarse. **2** /vi/ to wheeze, crackle, rattle. *bi-txarxiʃ w-hiyya nayma* she wheezes when she's sleeping. *ʕir-radyu bi-yxarxiʃ* the radio crackles. - vn *xarxaʃa*; ava *mixarxiʃ*.

خ ر د

خردة *xurda* <P *khurda*> **1** /coll n/ scrap-metal. *taagir xurda* scrap-metal dealer. ‖*raagil xurda* a useless man. **2** /n/ *[obsol]* one-fortieth of a piastre. ‖*ma-ħilt-uu-ʃ xurda* he's penniless.

خردوات *-xirdawaat, xurdawaat, xardawaat* /pl n/ haberdashery, smallwares, notions.

خردواتي *xirdawaati, xurdawaati, xardawaati* /n pl *-yya*/ haberdasher, vendor of smallwares and notions.

خرّد *xarrad* /vt/ to gather (scrap). - vn *taxriid*; ava/pva *mixarrad*.

اتخرّد *ʕitxarrad* /vi/ to be gathered (of scrap). - iva *mitxarrad*.

خ ر د ق

خردق *xurduq* /coll n/ pellets (e.g., for an air-gun).

خردقة *xurduqa* /unit n, pl *-aat*/ a pellet.

خردقاية *xurduqaaya* = *xurduqa*.

خ ر د ل

خردل *xardal* /n/ mustard. /adjectivally/ lousy, rotten. *ɛiiʃa xardal* a rotten life.

خ ر ر

خرّ *xarr (u)* **1** /vi/ to leak. *ʕil-gardal bi-yxurr* the bucket leaks. ‖*ma-txurr[i]-ʃ min ʕiid-u l-mayya* (1) he's tight-fisted. (2) he's very precise. **2** /vt/ to leak out, allow to flow out. *ʕig-garħ[i] bi-yxurr[i] damm* the wound is bleeding. ‖*xarr illi f-baṭn-u* he spilled the beans, he confessed to everything. - vn *xarr, xararaan, xariir*; ava *xaarir*.

خرير *xariir* /n/ purl, murmur, gurgle (of running water).

خرّارة *xarraara* /n pl *-aat*/ cesspool, drain. ‖*ruuħ fi-xarraara* to hell with you!

خ ر ز [1]

خرز *xaraz, xaraz[i] (i, u)* /vt/ to pierce, bore. - vn *xarz*;

ava *xaariz*; pva *maxruuz*.

خرز *xaraz*[2] /coll n/ bead(s). ‖*xaraz il-baçar* gall bladders of cows. *marabbit xaraz il-baçar* a preparation supposed to have fattening properties.

خرزة *xaraza* /n/ **1** /unit n, pl *-aat, -aat*/ a bead. **2** /pl *xaraz*/ squared-off back end of a *faas* (q.v.).

مخراز *ʔmuxraaz* /n pl *maxariiz*/ awl.

مخارز *maxaariz* /pl n/ secret ways, tricks, devious behaviour. *ma-ḫadd*[i]*-ʃ yiʕraf maxarz-ak ʃilla ʃana* I'm the only one who knows all your ins and outs.

اتخرز *ʃitxaraz* /vi/ to be pierced, be bored. - iva *mitxiriz*.

انخرز *ʃinxaraz* = *ʃitxaraz*. - iva *minxiriz*.

خرّز *xarraz*[1] /vt/ to pierce in a number of places. - vn *taxriiz*; ava/pva *mixarraz*.

مخرّز *mixarraz* /n pl *-aat*/ bar made up of connected pieces of wood (in *mafrafiyya* work, see Pl.G, 6).

اتخرّز *ʃitxarraz*[1] /vi/ to be pierced in a number of places. - iva *mitxarraz*.

خ ر ز[2]

خرّز *xarraz*[2] /vt/ *[naut]* to splice (rope). - vn *taxriiz*; ava/pva *mixarriz*.

تخريزة *taxriiza* /n pl *taxariiz*/ *[naut]* splice.

اتخرّز *ʃitxarraz*[2] /vi/ to be spliced (of rope). - iva *mitxarraz*.

خ ر ز ا ن

خرزان *xarazaan* /coll n/ bamboo, cane. ‖*kursi xarazaan* cane chair or straight-backed wooden chair after the pattern of a cane chair. - also *xazaraan*.

خرزانة *xarazaana* /unit n, pl *-aat*/ a piece of cane, a cane. *ḍarab-ha b-xarazaana* he beat her with a cane. - also *xazaraana*.

خ ر س

خرس *xiris, xurus (a)* /vi/ **1** to shut up, fall silent. *ʃixras* shut up! **2** to become dumb. - vn *xars, xaras*; pva *maxruus*.

خرس *xaras (i)* /vt/ to silence, shut (s.o.) up.

أخرس *ʔaxras* /adj, fem *xarsa*, pl *xurs*/ dumb. *ʃumm il-ʃaxras tiʕraf luɣat ibn-a-ha [prov]* (the dumb man's mother knows her son's speech) familiarity teaches understanding. *xadu gooz il-xarsa ʃitkallimit [prov]* (they took the dumb woman's husband (and) she spoke) ≈ a drowning man will learn to swim. ‖ *ʃarḍ*[i] *xarsa* non-porous soil unfit for cultivation.

اتخرس *ʃitxaras* /vi/ to become dumb, become silent. *ʃir-radyu txaras leeh* why has the radio gone dead? - ava *mitxiris*.

انخرس *ʃinxaras* = *ʃitxaras*. - ava *minxiris*.

خرّس *xarras* /vt/ to shut (s.o. or s.th.) up, quieten, silence. *xarras ir-radyu* shut the radio off! - vn *taxriis*; ava/pva *mixarras*.

اتخرّس *ʃitxarras* /vi/ to be silenced. - iva *mitxarras*.

خ ر س ا ن

خرسانة *xarasaana* <T *ḫorasan*> /n/ concrete.

خرساني *xarasaani* /adj */ made of concrete.

خ ر س ي س

خرسيس *xarsiis* (also *xarsiis marsiis*) <T *ḫırsız*> /adj/ good-for-nothing.

خ ر ش

خ ر ش see خ ر ب: *xaraaf*

خ ر ش ف

خرشوف *xarʃuuf* /coll n/ globe artichoke(s).

خرشوفة *xarʃuufa* /unit n, pl *-aat*/ an artichoke.

خرشوفاية *xarʃufaaya* = *xarʃuufa*.

خ ر ش م

خرشم *xarʃim* /vt/ to give (s.o.) a severe beating (especially about the head and face). *ʃiliʕ ginaan-u w-xarʃim-ha* he went crazy and beat her face to pulp. - vn *xarʃama*; ava/pva *mixarʃim*.

اتخرشم *ʃitxarʃim* /vi/ to be beaten severely (especially about the head and face). - iva *mitxarʃim*.

خ ر ص ي ن

خارصين *xarṣiin* /n/ zinc.

خارصيني *xarṣiini* = *xarṣiin*.

خ ر ط[1]

خرط *xaraṭ (u)* /vt/ **1** to chop, cut up (vegetables, herbs). **2** to lathe, turn on a lathe. ‖*xaraṭ-u l-xarraaṭ wi-nçalab maat* (the turner turned it and fell down dead) it has no like, it cannot be reproduced. – /vi/ **3** to allow colouring, flavour, etc. to seep out. *ma-tixsil-uu-ʃ fi-mayya suxna laḫsan yuxruṭ* don't wash it in hot water in case it runs. *xalli ʃ-ʃaay yuxruṭ* leave the tea to brew. **4** to tell lies, tell tales. *ʃuul ʕumr-u yixruṭ fik-kalaam* he's always telling lies. *nazla tixruṭ fi-siirit giran-ha* she's gossiping away about her neighbours. - vn *xarṭ*; ava *xaariṭ*; pva *maxruuṭ*.

خرطة *xarṭa*[1] /n pl *-aat, xuraṭ*/ slice, chopped-off piece.

مخروط *maxruuṭ* /n pl *maxariiṭ*/ *[geom]* cone.

مخروطة *maxruuṭa* /n/ *[rur]* type of home-made noodle (usually eaten with milk and sugar).

مخروطي *maxruuṭi* /adj/ *[geom]* conical.
خراطة *xiraaṭa* /n/ lathing, turning.
خرّاط *xarraaṭ* /n */ **1** lathe operator, turner. ‖*bukra xarraaṭ il-banaat yixruṭ-ha* one day God who shapes the girls will make her shapely and pretty. **2** one who chops dough into lengths (in a bakery). **3** liar, slanderer.
مخرطة *maxraṭa* /n pl *maxaariṭ*[1] **1** lathe. **2** mincing knife (see Pl.B, 1).
اتخرط *ʔitxaraṭ* /vi/ **1** to be chopped, be cut up (of vegetables, herbs). **2** to be lathed, be turned on a lathe. - iva *mitxiriṭ*.
انخرط *ʔinxaraṭ* = *ʔitxaraṭ*. - iva *minxiriṭ*.
خرّط *xarraṭ* /vt/ **1** to chop finely, mince (vegetables, herbs). ‖*xarraṭuu lil-wizz* (they've chopped him up for the geese) he's disappeared, he's not around these days. **2** to chop into lengths. *ṣabbaɛit il-ɛagiina w-xarraṭit-ha bis-sikkiina* she formed the dough into fingers and chopped them into lengths with the knife. - vn *taxriiṭ*; ava/pva *mixarraṭ*.
اتخرّط *ʔitxarraṭ* /vi/ **1** to be chopped finely, be minced. **2** to be chopped into lengths. - iva *mitxarraṭ*.

خ ر ط [2]

خارطة *xarṭa*[2] /n pl *xuraṭ*/ map, chart.
خريطة *xariiṭa* /n pl *xaraayiṭ*/ map, chart.

خ ر ط م

خرطوم *xarṭuum* /n pl *xaraṭiim*/ **1** hose, flexible tube. ‖*xarṭuum fiil* elephant's trunk. **2** *[coarse]* penis, dick..
خرطم *xarṭam* /vi/ to set one's heart, mind or eyes (on s.th.), have designs (on s.th.). *ʔatarii mxarṭam ɛal-bint*[i] *wala ḥadd*[i]*-ʃ ɛaarif* it turned out that he had set his heart on the girl without anyone realizing. - vn *xarṭama*; ava *mixarṭam*.

خ ر ط و ش

خرطوش *xarṭuuf* <perh Fr *cartouche*> /coll n/ cartridge(s).
خرطوشة *xarṭuuʃa* **1** /unit n, pl *-aat, xaraṭiiʃ*/ a cartridge. **2** /n pl *xaraṭiiʃ*/ carton (of 200 cigarettes).

خ ر ع [1]

اخترع *ʔixtaraɛ* /vt/ to invent. *ʔixtaraɛit liɛba gdiida* she invented a new game. - vn *ʔixtiraaɛ*; ava *mixtiriɛ*.
اختراع *ʔixtiraaɛ* /n pl *-aat*/ invention.

خ ر ع [2]

خرع *xaraɛ (i)* /vt/ **1** to trouble, annoy, upset, bother. *ʔil-wad-da xaraɛ-ni mil-ɛiyaaṭ* this boy has driven me up the wall with his crying. **2** to frighten, shock. - vn *xaraɛaan*; ava *xaariɛ*; pva *maxruuɛ*.
خرعة *xarɛa* /n/ **1** bother. **2** shock.
خرع *xiriɛ* /adj */ spineless, wishy-washy.
خراعة *xaraaɛa* /n/ spinelessness, wishy-washiness.
اتخرع *ʔitxaraɛ* /vi/ **1** to be troubled, be bothered, be made tired. **2** to be frightened. - iva *mitxiriɛ*.
انخرع *ʔinxaraɛ* = *ʔitxaraɛ*. - iva *minxiriɛ*.

خ ر ف [1]

خرفان *xarfaan* /adj */ raving, incoherent (especially from hunger). *hiyya xarfaana mig-guuɛ* she's so hungry she's raving.
خرافة *xuraafa* or *xuraafa* /n pl *-aat, -aat*/ **1a** superstition. **1b** legend, fable. **2** *[slang]* something fantastic, something fabulous.
خرافي *xuraafi* /adj/ **1** legendary. *ḥayawaan xuraafi* a legendary beast. **2** incredible, fantastic, marvelous. *film*[i] *xuraafi* a fantastic film.
خرّف *xarraf* /vi/ to become feeble-minded. *fii riggaala lamma yikbaru yxarrafu* there are men who lose their wits when they grow old. *bi-txarraf bi-tquul ʔeeh* what are you raving about? ‖ *ʔis-saaɛa bi-txarraf* ≈ the watch is running on cart-wheels. - vn *taxriif*; ava *mixarraf, muxarrif*[t].
تخريف *taxriif* /n pl *taxariiʃ*/ raving, nonsensical talk. ‖*taxariif ramaḍaan* the nonsense supposedly talked by those fasting in Ramadan.

خ ر ف [2]

خريف *xariif* /n/ autumn, fall. *xariif il-ɛumr* old age.
خريفة *xariifa* /n/ **1** *ʔil-xariifa* the cool northern breeze that blows intermittently during the summer. **2** cool weather (during the summer). *ʔid-dinya baqit xariifa* a cool spell has come.
خريفي *xariifi* /adj */ autumnal.
خرّف *xarrif* /vi/ to turn cool (of the weather in summer). *ʔid-dinya b-tiigi l-bil-leel wi-txarrif* night comes and it gets cooler.

خ ر ف [3]

خروف *xaruuf* /n/ **1** /pl *xirfaan*/ ram, (loosely) sheep. *farwit xaruuf* sheep-skin. **2** man who has no say in the morals of his family.

خ ر ف ش

خرفش *xarfiʃ* /vi/ **1** to make a sound of scratching, rustling or crackling. *ʔil-faar bi-yxarfiʃ fid-durg* the mouse is scrabbling in the drawer. *ʔir-radyu bi-yxarfiʃ* the radio is crackling. ‖*ɛaql-u mxarfiʃ* he's crazy. **2** to be-

come rough, uneven or coarse. *saṭḥ iṭ-ṭarabeeza mxarfiʃ* the table top is rough. - vn *xarfaʃa*; ava *mixarfiʃ*.
خرفشة *xarfaʃa* /n/ roughness of finish. *ʃil-xaʃab laazim yikuun niḍiif wi-xaali min il-xarfaʃa* the wood must be clean and free of roughness.

خ ر ق
خرق *xaraq (a)* /vt/ **1** to pierce or bore (a hole) through. ‖ *geeb-u maxruuq* or *ʃiid-u maxruuqa* he's a spendthrift. **2** to deflower (a virgin). - vn *xarq, xaraqaan*; ava *xaariq*; pva *maxruuq*.
خارق *xaariqˆ* /adj */ extraordinary.
خوارق *xawaariqˆ, xawaariqˆ* /pl n/ miracles, marvels, wonders.
مخروقة *maxruuqa* /n/ *[butcher]* rump.
خرقة *xirqa* /n pl *xiraq*/ **1** rag, scrap of cloth. **2** Sufi attire.
اتخرق *ʃitxaraq* /vi/ **1** to be pierced. **2** to be deflowered (of a virgin). - iva *mitxiriq*.
انخرق *ʃinxaraq* = *ʃitxaraq*. - iva *minxiriq*.
خرّق *xarraq* /vt/ to pierce repeatedly, make several holes in. *fustaan mixarraq mil-ɛitta* a moth-eaten dress. - vn *taxriiq*; ava/pva *mixarraq*.
اخترق *ʃixtaraq* /vt/ **1** to penetrate. *ʃiṭ-ṭayyaara xtaraqit ḥaagiz iṣ-ṣoot* the aeroplane broke the sound barrier. **2** to traverse, cross. ‖ *ʃixtiraaq iḍ-ḍaḥya* cross-country racing. - vn *ʃixtiraaq*; ava *mixtiriq*.

خ ر م [1]
خرم *xaram (u)* **1** /vt/ to make a hole in. *ʃir-ruṣaaṣa xaramit il-ḥeeṭ* the bullet pierced the wall. *xaram il-ḥeeṭa ɛaʃaan yibuṣṣ[a] ɛalayya* he made a hole in the wall to peep at me. *ṭablit widn-u maxruuma* his eardrum is perforated. ‖ *geeb-u maxruum* or *ʃiid-u maxruuma* he is a spendthrift. **2** /vi/ to wander off the point. - vn *xarm*; ava *xaarim*; pva *maxruum*.
خرم *xurm* /n pl *xuruum, xiraam*/ hole, opening. *xurm[i] ʃibra* eye of a needle.
خرمة *xurma* /n pl *-aat*/ a small hole.
خرّامة *xarraama* /n pl *-aat*/ **1** paper punch. **2** *[naut]* pricker for making holes in sailcloth.
خرّامى *xarraami* /adv/ in a straight line, directly.
اتخرم *ʃitxaram* /vi/ to be punctured, be pierced with a single hole. - iva *mitxirim*.
انخرم *ʃinxaram* = *ʃitxaram*. - iva *minxirim*.
خرّم *xarram* /vt/ **1** to make holes in, perforate. *yixarram widaan il-banaat ɛaʃaan il-ḥalaq* he pierces the girls' ears for earrings. — /vi/ **2** to take a short cut. *mumkin tixarram min wara g-gamɛa* you can take a short cut behind the university. ‖ *xarram fik-kalaam* to speak improperly. **3** to be overspent (of a budget). *ʃil-mizaniyya xarramit maɛaaya* I have overspent my budget. - vn *taxriim*; ava/pva *mixarram*.
تخريمة *taxriima* /n pl *-aat, taxariim*/ **1** instance noun of *taxriim*. **2** short cut.
اتخرّم *ʃitxarram* /vi/ to be perforated. - iva *mitxarram*.

خ ر م [2]
خرمان *xarmaan* /adj */ craving, longing. *ʃana xarmaan ɛala sgaara* I'm dying for a cigarette.

خ ر و ع [1]
خروع *xarwaɛ[i]* /coll n/ castor oil plant(s). *zeet xarwaɛ* castor oil.

خ ر و ع [2] see also خ ر ع [2]
خروع *xarwaɛ[2]* **1** /vi/ to become feeble, become physically weak and helpless. *ʃir-raagil xarwaɛ min ɛillit il-ʃakl* the man became weak from lack of food. **2** /vt/ to weaken, exhaust, enfeeble. *ʃis-sahar mixarwaɛ-ni* staying up late has worn me out. - vn *xarwaɛa*; ava/pva *mixarwaɛ*.

خ ر ى [1]
خرى *xiri (i)* /vt and vi/ *[coarse]* to defecate, shit. *ʒarraṭ il-ʃimaam xiryu l-muṣalliin [prov]* (the imam farted so those praying shitted) ≈ the error of a leader is compounded by his followers. - vn *xara*; ava *xaari*.
خرى *xara[2]* /coll n/ *[coarse]* faeces, shit. ‖ *ʃil-xara baqaa-lu mara yiḥlif ɛaleeha biṭ-ṭalaaq [prov]* even the lowest of the low have acquired rights which they can abuse, look what the world has come to! - /adjectivally/ *ʃil-ʃayyaam il-xara faydit-ha nom-ha [prov]* the only good thing you get from lousy times is the sleep you have during them.
خرية *xarya* /unit n, pl *-aat*/ *[coarse]* a turd.
خرّى *xarra* /vt/ *[coarse]* **1** to make (s.o.) defecate. *ʃilli yxarrii zayy illi yɛarrii* (or *yiwaḍḍii*) *[prov]* ≈ he doesn't know chalk from cheese. **2** to give (s.o.) a hard time. - ava/pva *mixarri*.
اتخرّى *ʃitxarra* /vi/ passive of *xarra*. - iva *mitxarri*.

خ ر ى [2]
خرية *xariyya* /n pl *xaraaya*/ fine small gold or gold-plated disc (e.g., on necklaces and bracelets).

خ ر ى ط
خريط *xaryaṭ* /vt/ **1** to exhaust, drain of strength. *kutr iʃ-ʃuɣl[i] xaryaṭ-ni* I'm worn out from so much work. — /vi/ **2** to become exhausted. *ʃana xaryaṭt* I'm

finished! **3** to do badly, fail hopelessly (e.g., in an exam). - vn *xaryaṭa*; ava/pva *mixaryaṭ*.
اتخريط ʕitxaryaṭ /vi/ to be or become exhausted. - ava/iva *mitxaryaṭ*.

خ ز ا م
خزام *xuzaam*[1] *[bot]* hyacinth.

خ ز ر ا ن
خزران *xazaraan* /coll n/ bamboo, cane. ‖ *kursi xazaraan* cane chair or straight-backed wooden chair made after the pattern of a cane chair. - also *xarazaan*.
خزرانة *xazaraana* /unit n, pl *-aat*/ a bamboo cane. - also *xarazaana*.

خ ز ع ب ل
خزعبلات *xuzaɛbalaat* /pl n/ superstitions.

خ ز ف
خزف *xazafˀ* /n/ pottery, ceramic work.
خزفى *xazafiˀ* /adj/ ceramic.
خزّاف *xazzaafˀ* /n */ potter, ceramist.
خزّف *xazzifˀ* /vt and vi/ to pot, work in ceramics. - vn *taxziif*; ava/pva *mixazzif*.

خ ز ق
خزق *xazaq (u)* /vt/ to pierce, make a hole in. - vn *xazq*; ava *xaaziq*; pva *maxzuuq*.
خازوق *xazuuq* /n pl *xawaziiq*/ **1** impaling spike. **2** dirty trick, doublecross. **3** *[carp]* wooden peg or pin. **4** *[constr]* **4a** a pile. **4b** pile-driver. see further under خ و ز ق
اتخزق ʕitxazaq /vi/ to be pierced. - iva *mitxiziq*.
خزّق *xazzaq* /vt/ to impale, drive a peg or stake into. *law ma-skitt*[i] *-ʃ ḥ-axazzaq ɛenee-k* if you don't shut up I'll put your eyes out! - vn *taxziiq*; ava/pva *mixazzaq*.
اتخزّق ʕitxazzaq /vi/ to be impaled or pierced. - iva *mitxazzaq*.

خ ز ل [1]
اختزل ʕixtazal /vt/ *[chem]* to reduce. - vn *ʕixtizaal*; ava *muxtazil*.
اختزال ʕixtizaal /n/ shorthand.
اختزالى ʕixtizaali /adj/ *[chem]* pertaining to reduction. *mawaadd ixtizaliyya* reduction agents.

خ ز ل [2]
خذل *xazal (i)* /vt/ to let down, disappoint. *xazal-ni waqt if-ʃidda* he left me in the lurch in time of need. - vn *xizlaan*; ava *xaazil*; pva *maxzuul*.
انخذل ʕinxazal /vi/ to be disappointed, be left in the lurch. - iva *minxizil*.
اتخذل ʕitxazal = ʕinxazal. - iva *mitxizil*.

خ ز م [1]
خزم *xazam (i)* /vt/ to pierce (the nose, particularly of an animal). - vn *xazm*; ava *xaazim*; pva *maxzuum*.
خزام *xuzaam*[2], *xizaam* /n/ **1** /pl *-aat*/ nose ring. ‖ *xizaam-u liif* he is kept on a tight leash. **2** /pl *xizíma*/ seton.
اتخزم ʕitxazam /vi/ to be pierced (of the nose, particularly of an animal). - iva *mitxizim*.

خ ز م [2] see خ ز ا م : *xuzaam*[1]

خ ز ن
خزن *xazan (i)* /vt/ to store. *bi-nixzin il-quṭn*[i] *l-ɤaayit ma l-ḥukuuma tiftirii* we store the cotton till the government buys it. *lift*[i] *btaaɛ il-xaziin [vendor's cry]* turnips for storage (fit to be kept - not too ripe). - vn *xazn, xaziin*; ava *xaazin*; pva *maxzuun*.
خزين *xaziin* /n/ **1** /coll n/ household provisions. **2** pantry, cupboard.
خزينة *xaziina* /n pl *xazaayin*/ = *xazna*.
خزنة *xazna* /n pl *xizan*/ **1a** cash window, cash desk, cashier's office. **1b** safe, coffer. **2** *[mech]* seating.
خزانة *xazaana* /n pl *-aat*/ **1** pantry, cupboard. **2** *[obsol]* treasury. ‖ *wizaarit il-xazaana* the Treasury.
خزّان *xazzaan* /n pl *-aat*/ **1** storage tank. **2** reservoir. **3** dam, barrage.
مخزن *maxzan* /n pl *maxaazin*/ warehouse, storehouse, storage place, depot. *maxzan ɣalla* wheat granary (see Pl.C, 4). *ʕamiin maxzan* stock clerk. *maxzan butagaaz* butane gas depot.
مخزنجى *maxzangi* /n pl *-yya*/ store-keeper.
خزّن *xazzin* **1** /vt/ **1a** to store, store up. *bi-nxazzin il-ʕakl*[a] *ɛalaʃaan il-ɛiid* we store up food for the feast. **1b** to place in a store or depot. *ʕana mxazzin il-ʕutubiis il-fagr* I took the bus back to the depot at dawn. **2** /vi/ to harbour resentment. *ʕig-gamal mixazzin-lu* the camel is bearing him a grudge. - vn *taxziin*; ava/pva *mixazzin*.
اتخزّن ʕitxazzin /vi/ **1** to be stored up. **2** to be placed in a store or depot. - iva *mitxazzin*.
اختزن ʕixtazan /vt/ to store up. *ʕin-naml*[i] *b-yixtizin is-sukkar* the ants store away the sugar. - ava *mixtizin*.

خ ز ى
خزى *xizi↓ (a)* /vi/ to become bashful, shy, embarrassed or ashamed. - ava *xazyaan*.

خزى *xaza (i)* /vt/ **1** to spite (the Devil or the evil eye). *ma-tiqrab-uu-ʃ - ʕixzi ʃ-ʃiṭaan* don't hit him - spite the Devil (i.e., resist the temptation to hit him). *ʕallahumma xzii-k* (i.e. *yixzii-k) ya ʃṭaan* ≈ get thee behind me, Satan! *ʕana ḥazẓ-i kaan haayil in-nahar-da - huss - ʕixzi l-ɛeen* 'My luck was fantastic today.' 'Shush - don't tempt the evil eye!' **2** to put to shame. *da xazaa-na b-taṣarrufaat-u* he embarrassed us with his behaviour. - vn *xiza*; ava *xaazi*; pva *maxzi*.

خزية *xazya* /inst n, pl *-aat*/ a shame, a disgrace.

مخزى *muxziˀ* /adj */ shameful, disgraceful.

خ س ت ك

خستك *xastik (i)* <perh P *khastagî*> **1** /vi/ to become weak, out of sorts, tired or exhausted. *xastikt*^{i} *min kutr is-sahar* I am worn out from staying up late so often. *ʕil-makana xastikit* the engine got tired. **2** /vt/ to weaken, exhaust. *kutr if-fuxl*^{i} *xastik-ni* so much work has exhausted me. - vn *xastaka*; ava/pva *mixastik*.

خ س ر

خسر *xisir, xusur (a)* /vt/ **1** to forfeit, lose, let slip. *ḥa-nixsar if-faqqa wil-beet kull-u b-sabab ʕihmaal-ak* we'll lose the flat and the house altogether because of your negligence. *xisirt*^{i} *ṣḥubiyyit-u* I lost his friendship. *xisirt*^{i} *fluus-u* I lost his money (through unprofitable dealing). *ṭiliɛt*^{i} *min if-fuxla xasraan* I came out of the deal worse off than I was before. **2** to lose, fail to win. *ḥa-yixsaru l-matʃ* they're going to lose the match. ‖ *ya faaṭir ramaḍaan ya xaasir diin-ak* (children's chant) you breaker of Ramadan's fast, you profaner of your religion. — /vi/ **3** to spoil, become spoiled. *ʕil-laban xisir* the milk has gone bad. **4** to break down, cease to function. *saɛṭ-i xasraana* my watch is out of order. **5** to fall (morally), go to the dogs. *ʕil-walad xisir* the boy became a bad lot. *mara xasraana* a fallen woman. - vn *xusaara*; ava *xaasir, xasraan*.

خسارة *xusaara* /n pl *xasaayir*/ loss, waste, pity. *ʕik-kitaab da xusaara fii* this book is wasted on him. *xusaara tirmii-ha* it would be a pity to throw it away. *xasaayir fil-mabiɛaat* losses on sales. *xasaayir fil-ʕarwaḥ*^{ˀ} fatalities. ‖ *ya xsaara* what a pity! too bad!

خسّر *xassar* /vt/ **1** to cause to lose. *ʕil-qumaar xassar-u fluus-u* gambling made him lose his money. **2** to spoil, wreck, ruin. *ʕil-waqɛa xassarit il-minabbih* the fall ruined the alarm clock. *xassar il-bint* (1) he ruined the girl's morals. (2) he had sexual intercourse with the girl. - vn *taxsiir*; ava *mixassar*.

اتخسّر *ʕitxassar* /vi/ passive of *xassar*. - iva *mitxassar*.

استخسر *ʕistaxsar* /vt/ **1** to consider too good to waste. *bi-yistaxsaru zibl il-ḥamaam ɛaʃaan yiqdaru ybiɛuu* they consider it a waste to throw away the pigeon droppings since they can sell them. ‖ *b-astaxsar fii ʃarbit il-mayya* ≈ I don't think he's worth a brass farthing. **2** /preverb/ to consider it a waste (to do s.th.). *ʕana mistaxsar armii-ha* I can't bring myself to throw it away. *b-astaxsar ʕakallim-u* I wouldn't waste my breath on him. - vn *ʕistixsaar*; ava *mistaxsar*.

خ س ر و –

خسروان *xasrawaan* <perh P *khusrawânı*> /adv/ sidesaddle.

خ س س [1]

خسّ *xass (i)* /vi/ **1a** to shrink. *ʕil-qumaaʃ xass*^{i} *fil-ɣasiil* the cloth shrank in the wash. *ʕil-filuus xassit* the money ran low. **1b** to lose weight. *ɛamalt*^{i} *rjiim ɛaʃaan ʕaxiss* I went on a diet to lose weight. **2** to be missing, be lacking. *ʕeeh illi ḥa-yxiss*^{a} *ɛaleehum law iḥtafalu min ɣeer mikrufoon* what are they going to lose, if they celebrate without a loudspeaker? - vn *xasasaan, xissiyya*; ava *xaasis*.

خسّية *xissiyya* /n/ shrinkage, weight-loss.

خسّس *xassis* /vt/ **1** to cause to shrink. **2** to cause to lose weight. - vn *taxsiis*; ava *mixassis*.

اتخسّس *ʕitxassis* /vi/ **1** to be caused to shrink. **2** to be caused to lose weight. - iva *mitxassis*.

استخسّ *ʕistaxass* /vt/ **1** to find shrunk or diminished. *ʕistaxassit is-sukkar qaamit tahamit if-fakkaala* she found the sugar had diminished so she accused the servant. **2** to consider (too) little. *ʕistaxass il-ʕugra* he considered the wage too little. - ava *mistixiss*.

خ س س [2]

خسّة *xissa* /n/ meanness, baseness. *xissit il-ʕaṣl* meanness of character.

أخسّ *ʕaxass* /el/ **1** more/most mean or base. **2** more/most miserly.

خساسة *xasaasa* /n/ meanness, baseness. *xasaasit iṭ-ṭabɛ* meanness of character.

خسيس *xasiis* /adj * and pl *xusasa*/ **1** mean, vile, base. **2** miserly.

خ س ع

خسع *xassaɛ* /vi/ **1** to run out, become used up. *ʕil-xaʃab xassaɛ maɛaaya* I ran out of wood. **2** to become debilitated, break down (usually from old age). *ɛarabiyyit-i bi-txassaɛ maɛaaya ktiir* my car breaks

down on me a lot. — **3** /vt/ to weaken, debilitate. *kutr if-fuɤl^{i} mxassaɛ-ni* too much work has worn me out. - vn *taxsiiɛ*; ava/pva *mixassaɛ*.

خ س ف

خسف *xasaf (i)* /vt/ **1** to eclipse. **2** to consume utterly, annihilate. ‖*xasaf biyya l-ʕarḍ* he finished me off. - *ya maxsuuf ir-raqaba* you wretch! - vn *xasf, xasafaan*; ava *xaasif*; pva *maxsuuf*.

خسوف *xusuuf* /n/ eclipse. *xusuuf kulli* total eclipse.

اتخسف *ʕitxasaf* /vi/ **1** to be eclipsed. **2** to be annihilated. - iva *mitxisif*.

انخسف *ʕinxasaf* = *ʕitxasaf*. - iva *minxisif*.

خ ش ا ف

خشاف *xuʃaaf, xaʃaaf* <T *ḫoşaf* from P> /n/ dish of dried or fresh fruits macerated or stewed in sugar syrup.

خ ش ب

خشب *xaʃab* /coll n, pl *ʕaxʃaab*/ wood, timber.

خشبة *xaʃaba* /unit n, pl *-aat*/ **1** a length of wood, a stick. *bi-yzuqq iṭ-ṭooq quddaamu b-xaʃaba* he propels the hoop before him with a stick. *ʃaaṭ fooq il-xaʃaba* he shot (the ball) over the top strut (of the goal). ‖*xaʃabit il-masraḥ* stage. - *ʕit-talat xaʃabaat [soccer]* the goal. **2a** *[Isl]* wooden bier on which a corpse is carried to the grave. **2b** *[Chr]* coffin.

خشبى *xaʃabi* /adj */ made of wood. ‖ *ʕalaat xaʃabiyya* woodwind instruments.

خشّاب *xaʃʃaab* /n * and pl *xaʃʃaaba*/ *[constr]* scaffolding erector.

خشّابى *xaʃʃaabi* /adj invar/ **1** pertaining to wood. *mabrad xaʃʃaabi* carpenter's file. *qalam xaʃʃaabi* draughtsman's pencil, hard lead pencil. ‖*sitt^{a} ɛaḍm-a-ha xaʃʃaabi* a big woman. **2** woody in texture. *kummitra xaʃʃaabi* a variety of hard pear.

خشّب *xaʃʃib* **1** /vt/ to timber, lay with timbers. **2** /vi/ to stiffen, become rigid. *gism-u xaʃʃib lamma simiɛ ik-kalaam da* his body stiffened when he heard those words. - vn *taxʃiib*; ava/pva *mixaʃʃib*.

تخشيبة *taxʃiiba* /n pl *-aat, taxaʃiib*/ **1** police-station detention cell. *ḫa-tbaat fit-taxʃiiba* you'll spend the night in the lock-up. **2** shed, hut.

خ ش ت

خشت *xiʃt* <P *khisht*> /n pl *xuʃuut*/ lance, spear.

خ ش خ ش [1]

خشخش *xaʃxiʃ* /vi/ to make a crackling or rattling sound. *da ɛandu kuḫḫa w-sidr-u bi-yxaʃxiʃ qawi* he has a cough and his chest rattles badly. *ʕusṭuwaana fiiha xaʃxaʃa* a crackly record. - vn *xaʃxaʃa*; ava *mixaʃxiʃ*.

خ ش خ ش [2]

خشخاش *xuʃxaaʃ* /coll n/ poppies. *zeet il-xuʃxaaʃ* poppy-seed oil.

خشخاشة *xuʃxaaʃa* /unit n, pl *-aat*/ a poppy.

خ ش ر م

خشرم *xaʃrim* /vt/ to wreck, smash, bash, ruin. *ɛamal ḫadsa w-xaʃrim nafs-u* he was involved in an accident and got badly injured. - vn *xaʃrama*; ava/pva *miraʃram*.

اتخشرم *ʕitxaʃrim* /vi/ to be wrecked, smashed, or ruined. - iva *mitxaʃrim*.

خ ش ش

خش *xaʃʃ (u)* /vt/ **1** to go or come into, enter. *xaʃʃeet il-beet* I entered the house. *xaʃʃ ig-geef* he went into the army. — /vi/ **2** to go or come in, enter. *xabbaṭ ɛal-baab qabl^{i} ma txuʃʃ* knock on the door before you go in! *ʕil-leel xaʃʃ* night came. *ma-bi-yxuʃʃ^{i}-ʃ fiṣ-ṣanf^{i} da* it is not of that type, it doesn't come under that heading. *xaʃʃeet ɛaleehum* I went in to them. *xaʃʃ^{i} ɛak-koora* he went in after the ball. *xuʃʃ^{i} ya-sṭa lissa fii wasaɛ* move up, driver, there's still plenty of space! *xaʃʃ^{i} fil-mawḍuuɛ* to get into the subject. ‖*xuʃʃ^{i} ymiin* turn right! *xaʃʃ^{i} f-muxx-u ʕinn* ... he got the idea that ..., as in *xaʃʃ^{i} f-muxx-u ʕinn ik-kalaam da ɛalee* he got the impression that this talk was about him. - *ma-xaʃʃ^{i}-ʃ fi-muxx(-u)* (1) to be unbelievable to (s.o.), as in *da kalaam ma-yxuʃʃ^{i}-ʃ fi-muxx^{i} ḫadd* no-one could believe such a thing. (2) to be unappealing to (s.o.), as in *da laḫn^{i} ma-yxuʃʃ^{i}-ʃ fil-muxx* that tune has no appeal. **3** to consummate a marriage, begin married life. *miʃ ḫa-nxuʃʃ^{i} ɤeer ma yikmal ig-gihaaz* we shan't get married before we have a completely furnished home. ‖*bi-yxuʃʃ^{a} ɛal-ɛaruusa leelit id-duxla* he has intercourse with the bride on the wedding night. - vn *xaʃaʃaan*; ava *xaaʃiʃ*.

¶ *xaʃʃ^{i} fi-* (1) to collide with, crash in to, as in *ʕil-ɛarabiyya xaʃʃit fi-ʃagara* the car crashed into a tree. (2) to fit on, as in *ʕil-xaatim bi-yxuʃʃ^{i} f-ṣubaaɛ-u* the ring goes onto his finger, *ʕil-banṭaloon ma-bi-yxuʃʃ^{i}-ʃ fiyya* the trousers are too tight for me. - *xaʃʃ^{a} ɛala* to take in, deceive, as in *law kunna mɤaffaliin kaan yixuʃʃ^{a} ɛaleena k-kalaam da* if we were gullible we would have been taken in by that.

يتخش *yitxaʃʃ* /vi imperf only/ to be fit to be entered. *beet il-kariim yitxaʃʃ* ≈ it is nice to visit a generous man.

da makaan ma-yitxaff^{i}-ſ min wasaxt-u it's such a dirty place that it's not fit to be entered! - iva *mitxaff*.

انخشّ *ſinxaff = ſitxaff*. - iva *minxaff*.

خشّش *xaffiſ* /vt/ to cause to enter. *xaffiſ-hum iṣ-ṣaala ɛala ţuul* take them straight into the hall! - vn *taxfiif*; ava *mixaffiſ*.

¶ *xaffiſ ɛala* to put over on. *tiftikir ſinnak ḥa-txaffiſ ik-kalam-da ɛalayya* do you think you're going to take me in by that?

اتخشّش *ſitxaffiſ* /vi/ to be made to enter, be inserted. *ſil-muṣmaar itxaffiſ bi-ţluuɛ ir-rooḥ* the nail went in (only) with the utmost difficulty. - iva *mitxaffiſ*.

¶ *ſitxaffiſ ɛala* to (be used to) deceive. *yiẓhar ſinn ig-gadaɛ il-ɛabiiţ da k-kalaam itxaffiſ ɛalee* it appears that this foolish fellow has been taken in.

خ ش ع

خشع *xaſaɛ (a)* /vi/ to be submissive, be humble (particularly before God). - vn *xuſuuɛ*; ava *xaaſiɛ*.

خشوع *xuſuuɛ* /n/ submissiveness (particularly before God), (holy) reverence.

خ ش ف see خ ش ا ف: *xuſaaf*

خ ش م

خشم *xaſam (i)* /vt/ to keep under control, keep a tight hand on (s.o.). *da-nti laazim tixſimi bint-ik ſiwayya* you should exercise firmer control over your daughter. - vn *xaſm, xaſamaan*; ava *xaaſim*; pva *maxſuum*.

اتخشم *ſitxaſam* /vi/ to be kept under control. - iva *mitxiſim*.

انخشم *ſinxaſam = ſitxaſam*. - iva *minxiſim*.

خ ش ن

خشنى *xuſni* /adj */ boorish, rough and rude.

خشن *xiſin* /adj */ **1** rough, coarse textured. *gild^{i} xiſin* rough skin. *ſaay xiſin* coarse tea. ‖*ṣoot xiſin* a husky voice. **2** rough, tough. ‖*ɛaḍma xiſna* bigwig. - /adverbially/ *bi-yilɛabu xiſin* they play rough.

أخشن *ſaxſan* /el/ more/most rough, coarse, tough, etc.

خشانة *xaſaana* /n/ roughness of finish.

خشونة *xuſuuna* /n/ **1** roughness of finish. **2** roughness of behaviour.

خشّن *xaffin* /vt/ **1** to roughen, give a rough finish to. *ſil-gaww^{i} bi-yxaffin il-ſalwaaḥ* the weather roughens the planks. **2** to thicken. *xaffin il-ɢalawooz milli* thicken the thread one millimetre. **3** to toughen up. *ſig-geef xaffin-u* army life has toughened him up. — /vi/ **4** to act tough. *huwwa xaffin maɛaaya fik-kalaam* he talked to me roughly. - vn *taxſiin*; ava *mixaffin*.

تخشينة *taxſiina* /n pl *-aat, taxaſiin*/ piece of cloth or paper used to tighten a joint.

اتخشّن *ſitxaffin* /vi/ passive of *xaffin*. - iva *mitxaffin*.

اخشنّ *ſixfann* /vi/ to become rough. *ſil-xaſab ſaqqaq wi-xfann^{i} min if-ſams^{i} wir-ruţuuba* the wood has cracked and become rough from (exposure to) the sun and humidity. - iva *mixfinn*.

خ ش و ل

خشول *xaſwal* /vi/ to make a rattling sound. *xaſwala fil-mutoor* a rattling sound in the motor. - vn *xaſwala*; ava *mixaſwil*.

خ ش ى

خشى *xiſi (a)* **1** /vt/ to fear. *ſixfa llaah* fear God! *ma-b-yixfuu-ſ ſawamr-i* they don't respect my orders. **2** /vi/ to feel fear. *ſif-fayaţiin bi-yixfu min ſaayit ik-kursi* the devils fear the Throne verse (of the Koran). - vn *xaſya, xiſa, xaſayaan*; ava *xaaſi*; pva *maxſi*.

خشى *xiſa* /n/ bashfulness, modesty, shame.

خشيان *xaſyaan* /adj */ bashful, shy, timid.

خشيان *xaſayaan* /n/ timidity, bashfulness, embarrassment.

اختشى *ſixtaſa* /vi/ to become embarrassed, have a sense of shame. *ma-b-yixtiſii-ſ min taṣarrufaat-u di ɢuddaam wilaad-u* isn't he ashamed to act so in front of his children? ‖ *ſixtiſi (ɛala damm-ak)* have some sense of shame! - *ſixtiſi ɛala faɛr-ak if-ſaayib* shame on your grey hairs! - *ſilli xtaſu maatu* only the shameless are left! there's no modesty left in the world! - *ſilli yixtiſi min bint^{a} ɛamm-u ma-yxallif-ſ^{i} wlaad [prov]* (he who feels embarrassed before his cousin when she becomes his wife, begets no children) ≈ he will achieve nothing who does not face the facts. - ava *mixtiſi*.

خ ص ب

خصب *xaṣb, xiṣb*↑ /adj/ fertile, rich. *ſarḍ^{i} xaṣba* fertile land. *xayaal xiṣb* a fertile immagination.

أخصب *ſaxṣab* /el/ more/most fertile.

خصوبة *xuṣuuba* /n/ fertility.

خصيب *xaṣiib: il-hilaal il-xaṣiib* the Fertile Crescent.

إخصاب *ſixṣaab* /n/ impregnation (of animals).

خصّب *xaṣṣab* /vt/ **1** to fertilize, enrich (land). **2** to impregnate. - vn *taxṣiib*; ava/pva *mixaṣṣab*.

اتخصّب *ſitxaṣṣab* /vi/ **1** to be fertilized, become or be made fertile. **2** to be impregnated. - ava/iva *mitxaṣṣab*.

استخصب *ſistaxṣab* /vt/ to consider fertile.

خ ص ر

خصر *xaṣr* /n pl *xuṣuur*/ waist.

خاصر *xaaṣir* /vt/ to put the arm round the waist of (s.o.). - vn *mixaṣra*; ava *mixaaṣir*.

اختصر *ʔixtaṣar* /vt/ **1** to summarize, condense. *ʔixtaṣar il-maqaala* he gave a summary of the article. **2** to short-cut. *ʔis-sawwaaq ixtaṣar it-ṭariiq* the driver took a short cut. — /vi/ **3** to be brief, be concise. *ʔixtiṣir fi-kalaam-ak* be brief in what you have to say! *ʔixtaṣar ik-kalaam laakin il-maʕna waaḥid* he cut down what he had to say, but the sense was the same. **4** to isolate oneself, hold oneself aloof. *ʔiḥna mixtiṣriin ʕan ig-giraan* we don't mix with the neighbours. *humma ʕayʃiin mixtiṣriin fi-ḥittit-hum* they live apart from the people of the neighbourhood. - vn *ʔixtiṣaar*; ava *mixtiṣir*; pva *muxtaṣar*.

اختصار *ʔixtiṣaar* /n/ brevity. *bi-xtiṣaar* in brief, to sum up.

خ ص ص ¹

خصّ *xaṣṣ*¹ *(u)* /vt/ **1** to concern, pertain to. *di ma-bi-txuṣṣ*ᵃ*-haa-ʃ* that's none of her business. *bi-yxuṣṣ-u-hum rukn*ⁱ *fil-maṭaar* they have a special corner in the airport. *ʔilli yxuṣṣ-u min il-wirs* such of the legacy as belongs to him. **2** to pick out, select. *xaṣṣuu bit-tarqiyya* they singled him out for promotion. — /vi/ **3** to apply or refer specially or exclusively. *ʔir-raḥma txuṣṣ*ⁱ *wil-laʕna tʕumm [prov]* salvation is for the few, damnation for the many. - vn *xiṣṣiyya, xuṣuuṣ*; ava *xaṣṣ, xaaṣṣ*↑; pva *maxṣuuṣ*.

خصوص *xuṣuuṣ: bi-xuṣuuṣ* concerning, with regard to. *ʕala (wagh*ⁱ*) l-xuṣuuṣ* especially, particularly.

¶ *xuṣuuṣan* /adv/ especially, in particular. *ʔana zaʕlaan minnu giddan wi-xuṣuuṣan ʔinnu ma-ʕazza-nii-ʃ* I'm very upset with him, especially since he didn't pay me (his) condolences.

خصوصي *xuṣuuṣi* /adj/ **1** private, personal. *duruus xuṣuṣiyya* private lessons. — /adv/ **2** especially. *faṣṣalt il-badla xuṣuuṣi ʕaʃaan il-ḥafla* I had the suit made especially for the party. **3** particularly. *bi-yḥibbu yitfassaḥu w-xuṣuuṣi ʔiza kaan ig-gaww*ᵃ *ḥilw* they like to go out especially if the weather is good.

خاصّ *xaṣṣ*², *xaaṣṣ*↑ /adj/ **1** of a special type. *ʔil-manaaṭiq il-bitroliyya laha ṭabiiʕa xaṣṣa* the petroleum-producing areas have a particular nature. *ʔagaaza xaṣṣa ʕaʃaan il-ḥagg* a special leave of absence for the pilgrimage. **2** extra-special, noteworthy. *ʕamaluu-lu ʕaʃwa xaṣṣa* they made him a special dinner. **3** private, not public, personal. *ʔil-qiṭaaʕ il-xaaṣṣ* the private sector (of the economy). *madaaris xaṣṣa* private schools.

¶ *xaṣṣ*ⁱ *bi-* particular to, peculiar to. *ʔil-ʔumuur il-xaṣṣa bil-muwaẓẓafiin* matters relating to employees. *markib xaṣṣa b-naqlⁱ il-biḍaaʕa* a ship specially for freight transportation. *ʔil-lahga l-xaṣṣa biṣ-ṣiʕiid* the dialect peculiar to Upper Egypt. *kullⁱ waaḥid fi-makaan-u l-xaṣṣⁱ bii* everyone is in his proper place.

خاصّة *xaaṣṣa*↑ /n/ **1** /pl *xawaṣṣ/ =xaṣṣiyya*. **2** /pl *xaṣaayiṣ/* characteristic, trait (of a group). *xaṣṣa min xaṣaayiṣ il-maganiin* one of the characteristics of the insane.

¶ *xaṣṣatan, xaaṣṣatan*↑ /adv/ especially, expressly, in particular.

خاصّيّة *xaṣṣiyya* /n pl *-aat/* property, characteristic (usually, of matter). *min xaṣṣiyyaat il-ḥadiid tawṣiil ik-kahraba* it is one of the properties of iron to conduct electricity.

مخصوص *maxṣuuṣ* /adj */ **1** specific, particular, certain. *tafṣiila maxṣuuṣa lil-ʔawlaad* a particular cut (of clothes) for children. **2** extra, special. *banziin maxṣuuṣ* first-grade petrol or gas. — /adv/ **3** especially, expressly, in particular. *gayyⁱ maxṣuuṣ ʕaʃaan yitkallim maʕaa* he's coming expressly to talk with him. *gaab ik-kitaab maxṣuuṣ ʕaʃaani ʔana* he brought the book especially for me.

أخصّ *ʔaxaṣṣ* /el/ more/most special, more/most particular. *ʕala l-ʔaxaṣṣ* or *bil-ʔaxaṣṣ* especially, particularly. *saʕaat il-ʔizaaʕa b-tiṭwal wi-ʕala l-ʔaxaṣṣⁱ fil-munasbaat il-waṭaniyya* sometimes the hours of broadcasting are lengthened, especially on national occasions.

أخصّائي *ʔaxiṣṣaaʔi* /n */ specialist. *ʔaxiṣṣaa ʔi gtimaaʕi* a social worker.

خصّص *xaṣṣaṣ* /vt/ to assign, allot. *laazim yixaṣṣaṣ makaan mustaqillᵃ ʕaʃaan il-ʕummaal* he must assign a separate place for the workers. *da mxaṣṣaṣ lil-maktab* this is earmarked for the office. - vn *taxṣiiṣ*; ava/pva *mixaṣṣaṣ*; pva *muxaṣṣaṣ*.

اتخصّص *ʔitxaṣṣaṣ* /vi/ **1** to specialize. *ḥ-atxaṣṣaṣ fig-giraaḥa* I'm going to specialize in surgery. *muḥaḍraat mutaxaṣṣiṣa* specialized lectures. **2** to be assigned, be allotted. *ʔil-muwaẓẓaf da txaṣṣaṣ li-stilaam il-busṭa* that employee was assigned the task of taking in the mail. - vn *taxaṣṣuṣ*; ava/iva *mutaxaṣṣiṣ*↑, *mitxaṣṣaṣ*.

تخصّص *taxaṣṣuṣ* /n pl *-aat/* specialization.

اختصّ *ʔixtaṣṣ* /vi/ **1** to concern oneself. *ʔil-muwaẓẓaf il-muxtaṣṣ* the responsible official, the official whose business it is. *kullⁱ lagna b-tixtaṣṣⁱ b-nafaaṭ muʕayyan* each committee concerns itself with a particular activity. **2** to be characterized, be distinguished. *kullⁱ balad bi-tixtaṣṣᵃ ʕan it-tanya b-mumayyizaat* each country is distinguished from another by characteristic traits. - vn *ʔixtiṣaaṣ*; ava *muxtaṣṣ*.

اختصاص *ʔixtiṣaaṣ* /n pl *-aat*/ concern, business. *da miʃ ixtiṣaaṣ-ak* that's not your concern. *da waaxid ixtiṣaṣaat il-muʃrif* he's taken over the supervisor's functions. *ʔixtiṣaṣaat il-maḥaakim il-muxtalifa* the jurisdictional competence of the various courts.

خ ص ص [2]
خصّ *xaṣṣ*[3] /coll n/ lettuce(s).
خصّة *xaṣṣa* /unit n, pl *-aat*/ a lettuce.
خصّاية *xaṣṣaaya* = *xaṣṣa*.

خ ص ص [3]
خصّ *xuṣṣ* /n pl *ʔixṣaaṣ*/ *[rur]* hut, shack, shanty, hovel.

خ ص ل
خصلة *xuṣla* /n pl *-aat, xuṣal*/ tress, lock.
خصلة *xiṣla* /n pl *xaṣaayil, xiṣlaat*/ personal trait, habit. *ʔilli fii xiṣla ma-yisla-haa-ʃ [prov]* ≈ a leopard doesn't change his spots.

خ ص م [1]
خصم *xaṣam (i)* /vt/ to deduct, subtract. *xaṣam-li yomeen* he docked me two days' pay. -vn *xaṣm*; ava *xaaṣim*; pva *maxṣuum*.
خصم *xaṣm*[1] /n pl *xuṣumaat, xuṣuum*/ discount, deduction. *bi-yiftiri minhum bi-xaṣm*[a] *ɛaʃara fil-miyya* he buys from them at a ten percent discount.
خصميّة *xaṣmiyya* /n pl *-aat*/ discount, deduction. *ʔil-xaṣmiyya ɛaʃaan il-ʃaɛḍaaʔ bass* the discount is for members only.
خصم *xiṣm*[1], *xaṣm*[2] /n pl *xuṣuum, ʃaxṣaam*/ opponent. *xuṣuum id-daɛwa* the opposing parties in the lawsuit. *xiṣm*[i] *w-ḥakam* ≈ judge and jury, as in *ɛaamil nafs-u xiṣm*[i] *w-ḥakam* he's setting himself up as judge and jury.
خصومة *xuṣuuma* /n pl *-aat*/ dispute, quarrel.
اتخصم *ʔitxaṣam* /vi/ to be deducted, be subtracted. *ʔil-baaqi txaṣam lil-xidma* the balance has been deducted for service. -iva *mitxiṣim*.
انخصم *ʔinxaṣam* = *ʔitxaṣam*. -iva *minxiṣim*.
خاصم *xaaṣim* /vt/ to break off relations with (s.o.) as a result of a dispute, cease to be on speaking terms with. -vn *xiṣaam*; ava *mixaaṣim*.
اتخاصم *ʔitxaaṣim* /vi/ to break off relations with each other as a result of a dispute. *humma mitxaṣmiin min mudda kbiira* they haven't been on speaking terms for a long time. -ava *mitxaaṣim*.
اختصم *ʔixtaṣam* 1 /vt/ to dispute with, quarrel with. *ruuḥ ʃana mixtiṣm-ak li-yoom il-ɋiyaama* ≈ I will never talk to you again! 2 /vi/ to have a dispute, quarrel. *ʔixtaṣamu ɋuddaam il-maḥkama* they quarrelled in front of the court. -iva *mixtiṣim*.

خ ص م [2]
خصم *xiṣm*[2] /n pl *xiṣaam, ʃaxṣaam*/ bolster-end cover.

خ ص ى
خصى *xaṣa (i)* /vt/ 1 to castrate, geld. 2 to gain control over, have (s.o.) by the balls. ‖*raagil maxṣi* spineless man, drip. -vn *xaṣayaan, xaṣy*; ava *xaaṣi*; pva *maxṣi*.
خصية *xaṣya, xiṣyaʔ* /n/ testicle (especially of a man).
خصي *xaṣiy* /adj/ castrated, gelded.
مخاصى *maxaaṣi* /pl n/ testicles (as food).
اتخصى *ʔitxaṣa* /vi/ to be castrated, be gelded. -iva *mitxiṣi*.
انخصى *ʔinxaṣa* = *ʔitxaṣa*. -iva *minxiṣi*.

خ ض ر
أخضر *ʔaxḍar* /adj, fem *xaḍra*, pl *xuḍr*/ 1a green. ‖*nifs-u xaḍra* he is gentle and unassuming. *-ʔilɛit-lu s-sinaan il-xuḍr* his teeth fell out (from old age). -*ʔil-ɋataba l-xaḍra* district of Cairo near the Opera Square. -*ʔil-ɋubbʾa l-xaḍra* (1) the dome above the Prophet Muhammad's tomb. (2) the Prophet's Mosque in Medina. 1b (loosely) greenish-blue, pale blue, greenish-grey, greyish-brown. *ɋuṭṭa xaḍra mxaṭṭaṭa* a tabby cat. *naɋl*[i] *ʔaxḍar* a (sandal) sole of camel leather (so-called because of its greenish tinge). 2a unripe (of plants, fruit etc.). *manga xaḍra* unripe mangoes. 2b not fully processed. *gild*[i] *ʔaxḍar* half-tanned leather. ‖*ṭuub ʔaxḍar* sun-dried mud brick. 2c fresh, not salted or cured (of fish). 3 damp, moist. *ʔil-hiduum lissa xaḍra* the clothes are still damp. 4 blessed with good fortune, prosperous. *sana xaḍra* a prosperous year. *ʔiid-u xaḍra* he has a lucky touch, he brings profit to whatever he involves himself in. *ɋadam-u ʔaxḍar ɋaleena* he brings us good luck.
الأخضرين *ʔil-ʔaxḍareen: sabb-i-lu* (or *laɋan-lu* etc.) *l-ʔaxḍareen* he insulted (or cursed etc.) his whole lineage.
خضرة *xuḍra* /coll n/ 1 pot herb(s). 2 greens, green vegetables. 3 verdure.
خضر *xiḍr: sid-na l-xiḍr* a pious man said in the Koran to have had an encounter with Moses and to be endowed with immortality and divine knowledge.
خضرى *xuḍari* /n pl *-yya*/ greengrocer.
خضار *xaḍaar* /n/ verdure, greenness.
خضار *xuḍaar* /coll n, pl *xuḍrawaat*/ vegetable(s).
خضّر *xaḍḍar* /vt/ 1 to make green. *ʔis-sabra xaḍḍarit*

il-ɡumaaʃ the dye made the fabric green. *ʕil-mayya bi-txaḍḍar iz-zarɛ* water makes plants grow green. **2** to cause to prosper. *ya rabbi xaḍḍar lina zarɛit-na* Lord, may we have a rich harvest. **3** *[agric]* to prepare and sow (land). — /vi/ **4** to sprout, put forth plants (of land). - vn *taxḍiir*; ava/pva *mixaḍḍar*.

اخضرّ *ʕixḍarr* /vi/ to turn green. *loon mixḍirr* a greenish colour. - vn *ʕixḍiraarˀ*; ava *mixḍirr*.

خ ض ر م

مخضرم *muxaḍram* /adj */ spanning more than one generation, experienced in the old ways and the new.

خ ض ض

خضّ *xaḍḍ (u)* /vt/ **1** to churn (milk). **2** to startle, give a sudden fright to. *lamma naṭṭi min wara l-baab xaḍḍ-i-ni moot* when he jumped out from behind the door he scared me to death. - vn *xaḍḍ, xaḍaḍaan*; ava *xaaḍiḍ*; pva *maxḍuuḍ*.

خضّة *xaḍḍa* /inst n, pl *-aat*/ start, sudden fright. ‖*ṭaasit il-xaḍḍa* shallow metal bowl used in folk medicine from which persons subjected to a fright drink specially treated water as a protection against sterility.

اتخضّ *ʕitxaḍḍ* /vi/ to be startled, be given a sudden fright. - iva *mitxaḍḍ*.

انخضّ *ʕinxaḍḍ* = *ʕitxaḍḍ*. - iva *minxaḍḍ*.

خ ض ع

خضع *xaḍaɛˀˀ (a)* /vi/ to be subordinate or subject. *balad-na b-tixḍaɛ li-muḥafẓit ʕasyuuṭ* our town comes under Assiut province. *bi-yixḍaɛ lit-taqaliid* it is governed by tradition. - vn *xuḍuuɛ*; ava *xaaḍiɛ*.

خضع *xaḍaɛ²ˀ (i)* /vt/ to subject, subjugate, subordinate.

أخضع *ʕaxḍaɛˀ* /vt/ to subject, subjugate, subordinate. *ʕaxḍaɛ ḥamaat-u l-ʕiradt-u* he made his mother-in-law submit to his will. - vn *ʕixḍaaɛ*; ava *muxḍiɛ*.

خ ط ء

خطئ *xaṭaʔ (i)* /vi/ to err. *xaṭeet fi-ḥaqq-u* I did him wrong. - vn *xaṭayaan*; ava *xaaṭi*.

خاطئ *xaaṭiʔ* /adj */ **1** irregular, against the rules. **2** wrong, at fault. — /n */ **3** *[Chr]* sinner.

خطأ *xaṭaʔ* /n pl *ʕaxṭaaʔˀ*/ mistake, fault. *ɛalaʃaan niṣallaḥ ʕaxṭaʔ-na* so we can rectify our mistakes.

خطيّة، خطيئة *xaṭiyya* /n pl *xaṭaaya*/ sin. ‖*xaṭiyyit* ... poetic justice as retribution for wrong done to (s.o.), as in *rigl-u kkasarit xaṭiyyit is-sitt il-ʕalbaana lli ḍarab-ha* when he broke his leg it served him right for having hit that poor woman.

أخطى، أخطأ *ʕaxṭaʔˀ, ʕaxṭa* /vi/ **1** to err, make a mistake. *ʕaxṭeet* (or *ʕaxṭaʔt-i*) *fit-taqdiir* I made a wrong estimate *bi-yixṭiʔ fi-ḥaqq in-naas* he does people wrong. **2** to sin, transgress. - ava *muxtiʔ, muxṭi*.

خ ط ب

خطب *xaṭab (u)* **1** /vt/ **1a** to propose marriage to (a girl). *raaḥ yixṭub-haa-lu ggawwiz-ha* he went to propose marriage to her on his (friend's) behalf, (and) he married her (himself). **1b** to ask for (a girl) in marriage. *xaṭabt-a-ha min ʕabuu-ha* I asked her father for her hand. **1c** to become engaged to (a girl). **2** /vi/ to deliver a speech, give an oration. - vn *xuṭba, xuṭuuba*; ava *xaaṭib*; pva *maxṭuuba*.

خطبة *xuṭba* /n/ **1** /pl *xuṭab*/ **1a** speech, oration. **1b** sermon given in a mosque. **2** /no pl/ engagement.

خطوبة *xuṭuuba* /n pl *-aat*/ engagement, engagement ceremony. *ʕil-xuṭuuba ṭaalit li-sana* the engagement lasted a year. *ʕana ɛazmaa-k ɛala xuṭubt-i* I invite you to my engagement.

خاطبة *xaṭba* /n pl *-aat*/ professional female matchmaker.

خطاب *xiṭaabˀ* /n pl *-aat*/ **1** letter. *gamiiɛ il-xiṭabaat il-mutaɛalliqa bil-mawḍuuɛ* all of the correspondence relating to the subject. **2** speech, address. *xiṭaab ir-rayyis itzaaɛ fit-tilivizyoon* the President's speech was broadcast on television.

خطابي *xiṭaabiˀ: tillixraaf xiṭaabi* night letter.

خطيب *xaṭiib* /n/ **1** /pl *xuṭṭaab*/ fiancé. **2** /pl *xuṭaba*/ speaker, orator.

خطيبة *xaṭiiba* /n pl *-aat*/ **1** fiancée. **2** female orator.

خطّابة *xaṭṭaaba* = *xaṭba*.

اتخطب *ʕitxaṭab* /vi/ passive of *xaṭab*. - ava *mitxiṭib*.

انخطب *ʕinxaṭab* = *ʕitxaṭab*.

خاطب *xaaṭib* /vt/ to address, talk to. - vn *muxaṭba*; ava *muxaaṭib*; pva *muxaaṭab*.

اتخاطب *ʕitxaaṭib* /vi/ **1** to converse, confer, talk together. **2** to be addressed. - ava/iva *mitxaaṭib*.

خ ط ر

خطر *xaṭarˀ (u)* /vi/ to come to mind. *fikra ma-xaṭarit-ʃi ɛala baal-i ʕabadan* a thought which never crossed my mind. - vn *xuṭuur*; ava *xaaṭir*.

خاطر *xaaṭirˀ* /n pl *xawaaṭir*/ **1** inner self, inner thoughts and feelings. *ɑalit-lu kull illi bi-yduur fi-xaṭir-ha* she told him everything that was going on in her mind. *xawaaṭir il-mulaqqin laazim tikuun murakkiza ɛal-mumassil* the prompter's whole attention must be focused on the actor. *xaṭar-li xaaṭir* an idea occurred to me. ‖*bi-xaaṭir-* according to the inclination of, as in

ʃiɛmil bi-xaṭr-ak do as you please! - *gabar (bi-)xaaṭir* or *ʃiftara* (or *ṭayyib) xaaṭir* to soothe (s.o.'s feelings) with a kind word or deed, treat (s.o.) with sympathetic consideration, help out (s.o. in distress), as in *kattar xeer-u ʃinnu gabar bi-xaaṭir il-yatiim* he is much to be praised for showing kindness to the orphan, *gabr il-xawaaṭir ɛal-allaah* ≈ your kindness to me will be rewarded by God's to you. - *kasar bi-xaaṭir* to hurt the feelings of, treat (s.o.) without consideration. - *xad ɛala xaṭr-u* he felt offended, his feelings were hurt. - *ʃaaf xaaṭir(-u)* to see to (s.o.'s) needs, as in *fuuf xaṭr-u* give him a gratuity, *ʃil-bint*^{i} *bi-ṯibb-ak - ʃuuf xaṭir-ha* the girl's in love with you - do something to make her feel good. **2** good will, kind feeling (held by one for another). *lu xaaṭir kibiir ɛand il-mudarriiin* the teachers would do anything for him. ‖ *ɛaʃaan xaaṭir* (1) for the sake of, as in *taɛaali ɛaʃaan xaṭr-i* come for my sake! (2) so that, in order to, as in *bi-yqaddim maʃariiɛ lil-ʃaqsaam ɛaʃaan xaaṭir tinaffiz-ha* he sends on projects to the departments for them to carry out.

¶ *ɛamal xaaṭir li-* to do a good turn to. *bi-yiɛmilu xaaṭir li-baɛḍ* they do one another good turns. - *xad (bi-)xaaṭir* to pay condolences to.

خطر *xuṭr* /n/ wish, desire. *miʃ bi-xuṭr-i* it does not depend on my will.

خطر *xaṭar*^{2} /n pl *ʃaxṭaar*/ danger, risk. *fii xaṭar ɛaleeha min il-moot* she's in danger of dying. *kull*^{i} *mihna laha ʃaxṭar-ha* every profession has its risks. - /adjectivally/ *ʃil-fiiʃa di xaṭar ɋawi* this socket is very dangerous.

خطورة *xuṭuura* /n/ **1** danger. *fii xuṭuura ɛala ḥayaat-ak* you are in danger of your life. **2** consequence, significance, seriousness. *ma-tqallil-ʃ*^{i} *min xuṭuurit wabaaʔ ir-raʃwa* don't play down the gravity of the bribery epidemic.

خطير *xaṭiir* /adj/ **1** dangerous. **2** serious, critical, crucial. **3** tremendous, incredible.

أخطر *ʔaxṭar*^{1} /el/ **1** more/most dangerous. **2** more/most serious, grave or significant.

مخاطر *maxaaṭir* /pl n/ dangers.

خاطر *xaaṭir*^{2} /vi/ to take risks, be reckless. *miʃ laazim tixaaṭir bi-ḥayaat-ak* you should not risk your life. - vn *muxaṭra*; ava *mixaaṭir*.

مخاطرة *muxaṭra* /n pl *-aat*/ risk.

أخطر *ʔaxṭar*^{2} /vt/ to notify, inform. *ḥa-yixṭir il-bank* he'll notify the bank. - vn *ʔixṭaar*; ava *muxṭir*.

إخطار *ʔixṭaar* /n pl *-aat*/ notification, advice note. *ʔixṭaar saḥb* debit withdrawal note.

خ ط ر ف

خطرف *xaṭraf* /vi/ to be delirious, rave. *bi-txaṭraf min is-suxuniyya* she's raving from the fever. - vn *xaṭrafa*; ava *mixaṭraf*.

خ ط ط

خطّ *xaṭṭ*^{1} *(u)* /vt/ **1a** to mark (paper) with lines. *xuṭṭ il-waraɋa di* rule lines on this sheet of paper. **1b** to draw (lines). *xuṭṭ*^{i} *talat xuṭuuṭ* draw three lines. **2** to furrow (land). *nixuṭṭ il-ʔarḍ il-ʔawwil* first we furrow the land. **3** to pencil (the eyebrows). - vn *xaṭṭ*; ava *xaaṭiṭ*; pva *maxṭuuṭ*.

خطّ *xaṭṭ*^{2} /n pl *xuṭuuṭ*/ **1a** line. *xaṭṭ il-ḥayaah* the line of life (of the hand). *xaṭṭ il-ʔufuq* the horizon. ‖ *xaṭṭ in-naar* the line of fire, the battle front. - *xaṭṭ*^{i} *seer* itinerary, route. - *ṭiliɛ min il-xaṭṭ* he did something unusual, he changed his routine. - *ɋaɛad-li fil-xaṭṭ* he wouldn't budge. **1b** route (e.g., of a bus). *nizilt*^{i} *f-ʔaaxir il-xaṭṭ* I got off at the terminus. **1c** telephone line, telephone connection. *ʔiddii-ni xaṭṭ*^{i} *xaarigi* give me an outside line! ‖ *huwwa miʃ maɛaaya ɛala l-xaṭṭ* there's no communication between us, he's not on my wavelength. **2** *[agric]* furrow. **3a** handwriting. *xaṭṭ*^{i} *miin da* whose handwriting is that? **3b** script, calligraphic style. *xaṭṭ*^{i} *kuufi* Kufic script. **3c** type fount.

مخطوط *maxṭuuṭ* **1** /n pl *-aat*/ (hand-written) manuscript. **2** /adj/ in manuscript form.

مخطوطة *maxṭuuṭa* /n pl *-aat*/ (hand-written) manuscript.

خطّة *xiṭṭa, xuṭṭa* /n pl *xiṭaṭ, xuṭaṭ*/ plan, scheme.

خطّاط *xaṭṭaaṭ* /n */ calligrapher, sign-writer.

خطّط *xaṭṭaṭ* /vt/ **1** to draw lines on, mark with lines, stripe. *xaṭṭaṭ il-malɛab* mark out the pitch! *kiliim mixaṭṭaṭ* a striped carpet. ‖ *nixaṭṭaṭ bil-wadaɛ* we (fortune tellers) tell the future using shells. **2** to furrow. *lamma tinɛam il-ʔarḍ*^{i} *kwayyis nixaṭṭaṭ-ha bil-miḥraat* when the ground is nice and smooth we furrow it with the plough. **3** to pencil (eyes and eyebrows). **4** to plan, draw up plans for, design. *ʃil-ḥarb*^{i} *tiḥtaag taxṭiiṭ* war needs planning. *ḥa-nxaṭṭaṭ il-balad min gidiid* we shall re-design the town. *wizaarit it-taxṭiiṭ* the Ministry of Planning. - vn *taxṭiiṭ*; ava/pva *mixaṭṭaṭ*.

مخطّط *muxaṭṭaṭ* /n pl *-aat*/ scheme, plot, conspiracy. *muxaṭṭaṭ yasaari* a leftist plot.

اتخطّط *ʃitxaṭṭaṭ* /vi/ passive of *xaṭṭaṭ*. - iva *mitxaṭṭaṭ*.

خ ط ف

خطف *xaṭaf (a)* /vt/ **1** to snatch, grab. *xaṭaft*^{i} *fanṭit-ha wi-griit* I snatched her bag and ran off. ‖ *xaṭaf rigl-u* to hop off, nip out, get oneself off, as in *xaṭaft*^{i} *rigl-i wi-ftareet-u* I nipped out and bought it, *laazim ʔaxṭaf rigl-i l-ḥadd*^{i} *ʃirka min ʃarikaat it-taʔmiin* I'd better get

myself down to one of the insurance companies. - *xaṭaf nafas-u* (1) to gasp for breath. (2) to constrict the breathing of, as in *ʕir-rabwʿ b-yixṭaf nafas-i* the asthma makes it difficult for me to breathe. **2a** to purloin, steal. *ʕil-ɛumda xaṭaf zarɛit-i* the mayor stole my crops. **2b** to kidnap. *xaṭafu ʕibn-u w-ṭalabu fidya* they kidnapped his son and demanded a ransom. **2c** to hijack. *xaṭafu ṭ-ṭayyaara* they hijacked the plane. - vn *xaṭf*; ava *xaaṭif*; pva *maxṭuuf*.

خطفة *xaṭfa* /inst n, pl *-aat*/ a grab, a snatch.

مخطوف *maxṭuuf* /adj/ pallid, blanched (of the face). *wiff-a-ha maxṭuuf wi-baayin ʕinnu ḥa-yuɤma ɛaleeha* her face is pallid and it looks as if she's going to faint. - also *maqṭuuf*.

خطّاف *xaṭṭaaf* /n * and pl *xaṭṭaafa*/ **1** snatcher. *xaṭṭaaf ʃunaṭ* a bag-snatcher. ‖*xaṭṭaafit riggaala* a woman who snatches men (from other women). - *xaṭṭaaf ʕigwaan [soccer]* goal-snatcher, cunning goal-scorer. **2a** kidnapper. **2b** hijacker.

خطّاف *xuṭṭaaf* **1** /n pl *xaṭaṭiif*/ large hook. **2** /coll n/ swallow(s).

مخطاف *muxṭaaf* /n pl *maxaṭiif*/ anchor.

اتخطف *ʕitxaṭaf* /vi/ passive of *xaṭaf*. - iva *mitxiṭif*.

انخطف *ʕinxaṭaf* = *ʕitxaṭaf*. - iva *minxiṭif*.

اتخاطف *ʕitxaaṭif* /vt/ to snatch from one another. *ʕahumma btadu yitxaṭfu k-koora* they've started to grab the ball from one another. - ava *mitxaaṭif*.

خ ط م

مخطمة *maxṭama* /n pl *maxaaṭim*/ muzzle. *ʕidḥak ɛal-ɢirdʿ b-maxṭama gild [prov]* (humour the ape with a leather muzzle) ≈ little things please little minds.

[1] خ ط ى

خطوة *xaṭwa* /n pl *-aat, xaṭaawi*/ **1** step, pace. *miʃi l-xaṭwiteen li-bet-ha* he walked the few steps to her house. ‖*xaṭwa ɛaziiza* ≈ you honour us by your visit! (especially to one who visits after a protracted absence). - *ʕahl il-xaṭwa* (in popular belief) people who have the power to transport themselves over vast distances by supernatural means or to appear simultaneously in more than one place. - *been il-xaṭwa wil-xaṭwa yifɛal allaah ma yafaaʕ [prov]* (between one step and the next God may do as He wills) ≈ there's many a slip twixt the cup and the lip. - *bi-yɛidd il-xaṭaawi ɛaleeha* he spies on her. **2** manner of stepping. ‖*xaṭwa tanʒiim [mil]* march on the spot! **3** a stage, a step in a procedure.

خطّى *xaṭṭa* **1** /vt/ to step over, cross. *w-allaahi m-axaṭṭi ɛatabit bet-hum baɤdʿ kida* I swear I'll never cross their threshold after this! ‖ *ʕimʃi sana wala txaṭṭi ɢana [prov]* (walk for a year rather than cross a ditch) ≈ slow but sure is best. **2** /vi/ to take a step, step. *law xaṭṭeet hina ḥ-amawwit-ak* if you come this way, I'll kill you! - vn *taxṭiyya*; ava/pva *mixaṭṭi*.

اتخطّى *ʕitxaṭṭa* /vt/ **1** to surpass, exceed. *ʕis-sawwaaq itxaṭṭa s-surɛa l-qanuniyya* the driver exceeded the speed limit. **2** to pass (s.o.) over, disregard. *ʕitxaṭṭuu-ni fit-tarɢiyya* they passed me over for promotion. – /vi/ **3** to be stepped over, be crossed. - ava/iva/pva *mitxaṭṭi*.

[2] خ ط ى see خ ط ء: *xaṭa, xaṭayaan, xaaṭi, xaṭiyya, xaṭaaya, ʕaxṭa, muxṭi*

خ ف ت

خافت *xaafit* /adj/ quiet, faint. *ḍooʕ xaafit* subdued light.

خ ف س

خفس *xafas (i)* /vt/ **1** to thrust down. *xafasʿ wiff-i fil-maxadda* I buried my face in the pillow. *ḥ-axfis buuz-u fil-ʕarḍ* I'll push his face into the dust! ‖*huwwa lli xafis-ni* he's the one who's holding me back (in life, in my career etc.). - *ya maxfuus* insulting form of address ≈ you who should be trodden into the ground. - *ʕil-maxfuus* insulting form of reference to one who is absent. - vn *xafs, xafasaan*; ava *xaafis*; pva *maxfuus*.

اتخفس *ʕitxafas* /vi/ to be thrust down. ‖ *ʕitxifis* sit down! plonk yourself down! - iva *mitxifis*.

انخفس *ʕinxafas* = *ʕitxafas*. - iva *minxifis*.

خ ف ش

خفّاش *xuffaaf, xaffaaf* /n pl *xafafiif*/ *[zool]* bat.

خ ف ض

خفض *xafaḍ (i)* /vt/ to lower. *ʕil-ʕasbiriin mumkin yixfiḍ il-ḥaraara* aspirin may bring the temperature down. - vn *xafḍ*; ava *xaafiḍ*; pva *maxfuuḍ*.

خافض *xaafiḍ* /n/ Caster-down of the proud (epithet of God).

انخفض *ʕinxafaḍ* /vi/ to become low, decline. *ʕinxifaaḍ fil-mabiɛaat* a drop in sales. *badʕʿ minxifiḍ [athl]* a crouching start. - vn *ʕinxifaaḍ*; ava *minxifiḍ, munxafiḍ*.

منخفض *munxafaḍ* /n pl *-aat*/ depression, low-lying area. *munxafaḍ il-qaṭṭaara* the Qattara depression.

خفّض *xaffaḍ* /vt/ to lower, reduce. *ʕasɛaar muxaffaḍa* reduced prices. - vn *taxfiiḍ*; ava/pva *mixaffaḍ*; pva *muxaffaḍ*.

تخفيض *taxfiiq* /n pl *-aat*/ discount, reduction. *ʃiʃtara b-taxfiiq* he bought at a discount.

اتخفّض *ʃitxaffaq* /vi/ to be lowered, be reduced. *ʃis-siɛr itxaffaq* the price was reduced. - iva *mitxaffaq*.

¹ خ ف ف

خفّ *xaff (i)* /vi/ **1a** to become lighter. *lamma timla balloona hawa txiff* when you fill a balloon with air it gets lighter. **1b** to lessen, diminish in intensity. *kull[i] ma yikbar id-door yixiff[i] min ɛalee* the older he gets the milder the fits become. *ʃif-fuxl[i] xaff* the work has slackened off. ‖*xiff[i] ʃwayya* take it easy! **1c** to become less dense. *ʃiz-zeet bi-yxiff* the oil thins out. **2** to recover (from an illness). *xaffeet wil-ħamdu li-llaah* I'm better now, praise be to God! — /vt/ **3a** to make lighter. *xiff il-ħiml* lighten the burden. *xiff[i] ʃiid-ak ʃiwayya* don't use such a heavy touch. ‖*xiff-a-ha tɛuum [prov]* (lighten the ship and it will float) ≈ don't take things too seriously and you'll find they go better. **3b** to make less dense, lighten in consistency. *xiff il-muuna* don't put so much cement in the mortar! **3c** to slacken, take the strain off. *xiff il-ħabl* slacken the rope! **3d** to thin out. *xiff[i] ʃaɛr-i* thin out my hair! *lamma l-quṭn[i] yiṭlaɛ bi-yxiffuu* when the cotton comes up, they thin it out. - vn *xaff, xafafaan*; ava *xaafif*; pva *maxfuuf*.

خفّة *xiffa* /n/ **1** lightness. *xiffit ħaraka* agility. ‖*xiffit yadd* (1) manual dexterity. (2) quality of being light-fingered or larcenous. **2** vivacity, jolliness, light-heartedness. **3** silliness, fatuousness.

خفّيّة *xiffiyya* = *xiffa*. ‖ *ʃir-rizq[i] yħibb il-xiffiyya [prov]* ≈ making a living needs a quick mind.

خفّافة *xafaafa* = *xiffa*.

خفيف *xafiif* /adj pl *xufaaf*/ **1** light (in weight). *xafiif zayy ir-riiʃa* light as a feather. *qumaaʃ xafiif* light-weight material. *lams[i] xafiif* a light touch. ‖*ʃiid-u xafiifa* (1) he's dexterous. (2) he's light-fingered, he's larcenous. - *damm-u xafiif* he has a cheerful disposition, he's cute. - *qalb-u xafiif* he's easily startled, he's timid. - *ɛaql-u xafiif* he's feather-brained. - *rabb-i-na yiggal ik-kalaam xafiif ɛala qalb-u-hum* ≈ may the spirits not be offended by our words (a formula pronounced during the *zaar*). - *ʃil-mutoor xafiif [auto]* the engine is losing compression. **2** simple, not complex. *ʃil-mas ʃala di xafiifa* this is a simple problem. *musiiqa xafiifa* light music. **3** small in quantity or extent, meagre. *faɛr-u xafiif* his hair is sparse. *ʃif-fuxl il-yomeen dool xafiif* there's not much work these days. *ʃiddii-ni ṭabaq fuul zeet xafiif* give me a plate of broad beans without much oil! *ziyaara xafiifa* a brief visit. **4** dilute, weak, thin or light in consistency. *ʃaay xafiif* weak tea (i.e. tea made without many leaves). *ʃarḍ[i] xafiifa* poor soil.

خفيّف *xifayyif* = *xafiif*.

أخفّ *ʃaxaff* /el/ lighter/lightest, etc.

خفّاف *xaffaaf* /n/ pumice. *ʃil-ħagar il-xaffaaf* pumice stone.

خفّافي *xaffaafi* /adj invar/ **1** lightish. *ɛuzuuma ʃeeh - di ʃakla xaffaafi bass* what do you mean, a feast? this is just a light snack! **2** easy-going, pleasant.

اتخفّ *ʃitxaff* /vi/ passive of *xaff* 3. - iva *mitxaff*.

خفّف *xaffif* /vt/ **1a** to make lighter. *xaffif-ha - miʃ qaadir ʃaʃil-ha* make it lighter; I can't carry it. ‖*xaffif damm-ak* ≈ don't be a drag! **1b** to lighten the consistency of, dilute. *xaffif il-buuya* thin the paint! **1c** to reduce in amount or extent. *xaffif huduum-u* he put on lighter clothing. *xaffif il-malḥ[i] fil-ʃakl* put less salt in the food. *xaffif il-ʃignaab* trim the edges. **1d** to slacken, take the strain off. *xaffif-lu s-surɛ[i] ʃwayya* give him a looser rein! **2** to cure. *ʃid-dawa xaffif-ni* the medicine cured me. - vn *taxfiif*; ava/pva *mixaffif, muxaffaf*.

اتخفّف *ʃitxaffif* /vi/ passive of *xaffif*. - iva *mitxaffif*.

استخفّ *ʃistaxaff* /vt/ **1** to consider light or easy. ‖*ʃistaxaffit ɛaql-u* she considered him a fool. - *ʃana ma-b-astaxaff[i]-ʃ damm-u* I don't consider him pleasant. **2** to select for lightness or easiness. - vn *ʃistixfaaf*; ava *mistixiff, mistaxaff*.

¶ *ʃistaxaff[i] bi-* to take lightly, treat with contempt. *ma tistaxiff[i]-ʃ bi-ɛaql-i* don't take me for a fool! *bi-yɛamil-ni b-muntaha l-istixfaaf* he treats me most contemptuously.

² خ ف ف

خفّ *xuff* /n pl *xifaaf, ʃaxfaaf*/ **1** slipper. ‖*rigiɛ bi-xuffay ħunéen* he returned empty-handed. **2** hoof (of a camel). *ʃilli tiɛmil-u n-namla f-sana yaxd-u g-gamal fi-xuff [prov]* what an ant accumulates in a whole year a camel can destroy in one kick ≈ people's capabilities differ.

¹ خ ف ق

خفق *xafaq (u)* **1** /vt/ to beat, whip (a liquid). *xafaqit il-beeḍ ɛafaan it-turta* she beat the eggs for the cake. **2** /vi/ to palpitate (of the heart). *xafaqaan fil-qalb* heart palpitations. - vn *xafq, xafaqaan*; ava *xaafiq*; pva *maxfuuq*.

اتخفق *ʃitxafaq* /vi/ to be beaten together. - iva *mitxifiq*.

انخفق *ʃinxafaq* = *ʃitxafaq*. - iva *minxifiq*.

² خ ف ق

خفّق *xaffaq* /vt/ to plaster over (a wall). - vn *taxfiiq*;

ava/pva *mixaffaq*.
اتخفّق ʔitxaffaq /vi/ to be plastered over (of a wall). - iva *mitxaffaq*.

خ ف ى
خفى *xifi (a)* /vi/ *[derog]* to disappear, vanish, buzz off. *ʕamal ʕamlit-u w-xifi* he did his dirty work and beat it. - vn *xafayaan*.
خفى *xafa¹ (i)* /vt/ to hide, conceal. *xafa f-fanṭa* he hid the bag. ‖ *ʔinta ya maxfi* you wretch! - *ṭaqiyyit il-ʔixfa* magic cap supposed to render its wearer invisible. - vn *xafy, ʔixfa*; ava *xaafi*; pva *maxfi*.
خفية *xifya* **1** /n/ *[rur]* agricultural land obtained when canals are filled in or roads dug up and unofficially annexed to neighbouring plots. **2** /adv/ secretly, covertly. *saafir xifya* he left unannounced.
خفى *xifa, xafa²* /n/ secrecy, hiddenness. *fil-xifa* in secret, as in *ʔil-muxaddaraat bi-titbaaʕ fil-xifa* drugs are sold clandestinely.
خفى *xafi* /adj/ hidden. *ʔil-ʕilm il-xafi* occult knowledge, esoteric knowledge.
خفىّ *xafiyy* /n/ Hidden One (epithet of God). *ya xafiyy il-ʔalṭaaf* O Thou of Hidden Graces!
اتخفى ʔitxafa /vi/ to be hidden, be concealed. - iva *mitxifi*.
انخفى ʔinxafa = ʔitxafa. - iva *minxifi*.
اختفى ʔixtafa /vi/ to disappear. *ʔil-walad ixtafa mil-beet* the kid disappeared from the house. - vn *ʔixtifa*; ava *mixtifi*.
اتخفّى ʔitxaffa /vi/ to become disguised, disguise oneself. - ava *mitxaffi*.
استخفى ʔistaxfa /vi/ to hide. *ʔistaxfu min in-naas wi-nisyu ʔinn rabb-i-na fayif-hum* they hid from people, but forgot that God sees them. -ava *mistaxfi*.
استخفّى ʔistixaffa↓, ʔistaxaffa↓ /vi/ to hide. - ava *mistaxaffi*.

خ ل ا ج
خلاجى *xulaagi* /n pl *-yyaat/ [Chr]* prayer book usually containing the three Coptic liturgies.

¹ خ ل ب
خلبة *xulba* /n pl *xulab/* **1** *[rur]* bundle, bunch. **2** *[text]* skein.

² خ ل ب
خلاّب *xallaab↑* /adj */ fascinating, captivating. *gamaal xallaab* captivating beauty. *manẓar xallaab* a fascinating scene.
مخلب *maxlab* /n pl *maxaalib/* paw.

خ ل ب ص
خلبص *xalbaṣ* /vi/ **1** to tattle, tell tales, fib. **2** to fabricate, make up stories. **3** to philander, be lecherous. — /vt/ **4** to mix up, make a mess of. - vn *xalbaṣa*; ava/pva *mixalbaṣ*.
خلبوص *xalbuuṣ* /n *xalabiiṣ/* **1** tattler, one who tells tales behind others' backs. **2** philanderer, lecher.
اتخلبص ʔitxalbaṣ /vi/ passive of *xalbaṣ*. - iva *mitxalbaṣ*.

خ ل ب ط
خلبط *xalbaṭ* /vi/ **1** to cause trouble maliciously. *maṭraḥ ma yruuḥ yixalbaṭ been in-naas* wherever he goes he sets people at odds with one another. — /vt/ **2** to confuse. *ʔinta xalbaṭt-i-na bil-ʔiṣaṣ bituuʕ-ak* you've confused us with your stories. - also *laxbaṭ*. - vn *xalbaṭa*; ava/pva *mixalbaṭ*.
اتخلبط ʔitxalbaṭ /vi/ to be or become confused. - iva *mitxalbaṭ*.

¹ خ ل ج
خليج *xaliig* /n pl *xilgaan, xulgaan/* gulf, bay. *xaliig is-siwees* the Gulf of Suez. *ʔil-xaliig il-ʕarabi* the Arabian Gulf. ‖ *(tirʕit) il-xaliig (il-maṣri)* an ancient canal which, until filled in in the middle of the nineteenth century, ran north-east across Cairo from its starting point on the Nile opposite Roda Island. *(faariʕ) il-xaliig* a street, known also as Port Said Street, running along part of the filled canal. *fumm il-xaliig* a district opposite Roda Island, at the beginning of the ancient canal.

² خ ل ج see: خ ل ا ج *xulaagi*

خ ل خ ل
خلخل *xalxil* /vt/ **1** to loosen the several parts of, cause loss of cohesion in. *sinna mxalxila* a loose tooth. **2** to displace, cause turbulence in (air). - vn *xalxala*; ava/pva *mixalxil*.
خلخال *xulxaal* /n pl *xalaxiil/* anklet.
اتخلخل ʔitxalxil /vi/ passive of *xalxil*. - vn *taxalxul*; iva *mitxalxil*.
تخلخل *taxalxul* /n/ turbulence.

خ ل د
خالد *xaalid* /adj */ immortal, eternal. *zikra xalda* an undying memory.
خلّد *xallid* /vt/ to immortalize. - vn *taxliid*; ava/pva *mixallid*; pva *muxallad↑*.
اتخلّد ʔitxallid /vi/ to be immortalized. - iva *mitxallid*.

خ ل س

اختلس ʔixtalas /vt/ to embezzle. - vn ʔixtilaas; ava mixtilis; pva muxtalasˆ.

اختلاس ʔixtilaas /n pl -aat/ misappropriation, embezzlement.

مختلس muxtalis /n */ embezzler.

خ ل ص

خلص xiliṣ[1] or xuluṣ (a) /vi/ **1** to come to an end, be finished. ʔiz-zeet xiliṣ there's no oil left. ʔil-ḥafla xilṣit the party came to an end. **2** to make an end. ʔixlaṣ baqa have done! that's enough out of you! nigmil qurɛa w-nixlaṣ let's toss up and have done! ma-tiftaḥ-ʃ il-mawḍuuɛ laḥsan ma-nixlaṣ-ʃ don't open the subject or we'll never hear the end of it. **3** to become exhausted. xiliṣt[i] mis-sillim the stairs tired me out. **4** to save oneself. ʔixlaṣ bi-ɛumr-ak run for your life! **5** to obtain clearance. ʔil-biḍaaɛa xilṣit min ig-gumruk the goods have been cleared through customs. - vn xalaṣaan, xuluuṣ; ava xaaliṣ, xalṣaan.

خلوص xuluuṣ /n/ *[mech]* clearance. ʔil-xuluuṣ been il-bistim wis-silindar the clearance between the piston and the cylinder.

خالص xaaliṣ /adj */ **1a** unmixed, pure. dahab xaaliṣ pure gold. **1 b**ˆ pure, true, sincere. ʔid-diin il-xaaliṣ the true religion. duɛaaʔ xaaliṣˆ true prayer, prayer from the heart. **2** free, clear. ʔil-muxṭaaf xaaliṣ the anchor's up. ‖gittit-ha miʃ xalṣa her body is possessed by a demon. - ʔinti xalṣa you are divorced! I divorce you! **3** paid-for in full. ʔil-ḥisaab xaaliṣ the bill is paid off. **4** finished, completed, ʔiʃ-ʃuɣl[i] xaaliṣ the work is completed. — /adv/ **5** very, extremely. wiḥiʃ xaaliṣ very bad. **6** completely, thoroughly. xallaṣt[i] xaaliṣ I've finished completely. ʔiṭfi n-naar lamma l-xuḍaar yistiwi xaaliṣ turn off the heat when the vegetables are thoroughly done. **7** at all, ever. ma-ʃuft[i]-ʃ ḥaaga xaaliṣ I didn't see anything at all. ma-tkallim-uu-ʃ xaaliṣ don't talk to him ever!

خلص xiliṣ[2] /adj */ sincere, truthful. tiḥiss[i] kida min kalaam-u ʔinnu miʃ xiliṣ you feel somehow from the way he talks that he is not straightforward. ‖damm-u miʃ xiliṣ he's crooked.

أخلص ʔaxlaṣ[1] /el/ more/most sincere.

خلاص xalaaṣ[1] /n/ **1** deliverance, salvation. kaan xalaaṣ-u ɛala ʔiid-i his deliverance was at my hands. ‖ʃuuf (or ʔiɛraf) xaṛ aaṣ-ak look to your own ends, look after yourself. ˆ /pl -aat/ placenta, afterbirth.

خلاص xalaaṣ[2] **1** adverb indicating finality ≈ once and for all. gittit-i nhaarit xalaaṣ my body is in a state of complete collapse. hiyya xalaaṣ baqit kiwayyisa she's become a good girl now. ʔiʃ-ʃams[i] nizlit xalaaṣ the sun's gone down now. m-ana xalaaṣ iʃtareet waaḥid I've already bought one. ʔana xalaaṣ ʔakalt (thanks) but I've had enough to eat. **2** /interj/ that's it! so much for that! xalaaṣ - ʔilli faat maat that's settled then, we'll let bygones be bygones. xalaaṣ - ʔana mwaafiq OK, I agree. xalaaṣ ya siid-i ma-tizɛal-ʃ never mind, old chap, don't get upset. xalaaṣ qarrabna - baqeena f-banha the journey's almost over now - we've got as far as Benha. yibqa xalaaṣ baqa that's it then, it's settled then. ‖wi-xalaaṣ (1) that's just the way it is, there's no argument about it, as in ʔahu huwwa lli tɛayyin wi-xalaaṣ he's the one who got the job and there's nothing to be done about it, ʔahu ʔana qult[i] kida w-xalaaṣ that's what I've decided and there are no two ways about it. (2) just to get it over with, rakkibii-lu ʔayy[i] zuraar wi-xalaaṣ just fix any old button on it.

خلاصة xulaaṣa /n/ essence, most important part. xulaaṣit il-mawḍuuɛ what the subject boils down to.

خليص xileeṣ: ʔiliɛ min darb[i] xleeṣ ≈ he escaped (death) by a miracle.

خلّص xallaṣ /vt/ **1** to finish, bring to an end. xallaṣt[i] ʃuɣl-i badri I finished my work early. **2a** to rid, free. di ḥa-txallaṣ il-beet min iṣ-ṣaraṣiir this will rid the house of cockroaches. rabb-i-na yxallaṣ-na minkum may Our Lord rid us of your presence! ‖xallaṣ ḍamiir-u he cleared his conscience. - ḥ-axallaṣ-lak taar-ak I will avenge you. **2b** to free from the marriage bond, divorce. **2c** /impers/ it is acceptable to, meets with the approval of. yixallaṣ-ak (ʔinn-ak) tihazzaʔ-ni ʔuddaam in-naas di kull-a-ha do you think it's right of you to mock me in front of all these people? laʔ ma-yxallaṣ-nii-ʃ ʔana mutʔassif no, I don't think it's right, I'm sorry. **3** to separate, disengage. ʔil-buliiṣ ga xallaṣ-hum min baɛḍ the police came and broke up the fight. ‖ma-ynuub il-mixallaṣ ʔilla taqṭiiɛ ḥiduum-u *[prov]* the (would-be) peace-maker only gets his clothes torn. **4** to save, rescue. xallaṣ-ni mil-warṭa di get me out of this fix! **5** to expedite a matter or job for (s.o.). xallaṣ-ni baqa ɛaayiz ʔamʃi finish what you're doing for me - I want to leave! **6** to obtain clearance for. — /vi/ **7** to be finished, be through. kallim-ni lamma txallaṣ give me a call when you're finished (with what you have in hand). - vn taxliiṣ; ava/pva mixallaṣ.

¶ xallaṣ ɛala (1) to exterminate, as in xallaṣu ɛala l-ɛaṣafiir they exterminated the birds, ḍaruuri nxallaṣ ɛalee qabl[i] ma ykallim il-buliiṣ we must do him in before he talks to the police. (2) to finish off, as in xallaṣ

ʕal-ʕeef min ɣeer ma yistanna l-laḥma he polished off the bread without waiting for the meat.

مخلّص *mixallaṣ* /adj */ resourceful, capable.

مخلّص *muxalliṣ* /n/ **1** = *mixallaṣaati*. **2** *[Chr]* Saviour (epithet of Jesus Christ).

مخلّصاتي *mixallaṣaati* /n pl *-yya*/ one who, for remuneration, facilitates the clearance of goods from customs, or of papers through the bureaucracy.

اتخلّص *ʔitxallaṣ* /vi/ **1** to rid oneself. *fii ʕadaat fi-balad-na laazim nitxallaṣ minha* there are customs in our country of which we must rid ourselves. **2** (impersonal) passive of *xallaṣ*. *ʔil-ʔakl itxallaṣ ʕalee* the food was finished off. *ʔil-biḍaaʕa txallaṣ ʕaleeha min ig-gumruk* the goods were cleared through the customs. - ava/iva *mitxallaṣ*.

أخلص *ʔaxlaṣ*[2] /vi/ to be faithful, loyal, be sincere. *ḥ-axliṣ-lik ṭuul il-ʕumr* I'll be faithful to you all my life. *muwaaṭin muxliṣ li-blaad-u* a citizen loyal to his country. - vn *ʔixlaaṣ*; ava *muxliṣ*.

استخلص *ʔistaxlaṣ* /vt/ **1** to deduce. *ʔistaxlaṣt*[i] *min kalam-ha ʔinnaha miʃ ʕayza* I deduced from what she said that she wasn't interested. *ʔistaxlaṣ in-natiiga* he drew the conclusion. **2**↑ to extract. *ʔistixlaaṣ iz-zeet min bizr il-ɢuṭn* the extraction of oil from cotton seed. - vn *ʔistixlaaṣ*; ava *mistaxlaṣ*.

خ ل ط

خلط *xalaṭ (i)* /vt/ to mix, blend. *bi-nixliṭ-u ʕal-mayya* we mix it with the water. *ḥaʃiiʃ maxluuṭ* adulterated hashish. ‖ *bi-yixliṭ fik-kalaam* he raves, he speaks nonsense. - vn *xalṭ*; ava *xaaliṭ*; pva *maxluuṭ*.

خلط *xalṭ* /n/ **1** (radio) interference, static. **2** nonsense.

خلطة *xalṭa* /n pl *-aat*/ mixture. *ʔil-xalṭa btaaʕit il-maḥʃi* the mixture for the stuffed vegetables. ‖ *ruzz*[i] *bil-xalṭa* rice with raisins, pine-nuts and spices; oriental rice.

خلط *xilṭ* /n/ *[rur]* straw and vegetable debris. ‖ *ṭiin xilṭ* mixture of straw etc. and mud used for making bricks, daub etc.

خليط *xaliiṭ* /n/ combination, mixture. *ʔin-niẓaam xaliiṭ min il-iʃtirakiyya wir-raʔsimaliyya* the system is a combination of socialism and capitalism. ‖ *ʕeef xaliiṭ* bread of wheat and maize flour.

خلّاط *xallaaṭ* /n pl *-aat*/ **1** mixing machine, blender (for food, cement). **2** mixer, tap that blends hot and cold water. **3** mixing head (of a welder's torch).

اتخلط *ʔitxalaṭ* /vi/ to be mixed, be blended. *ʔil-xarasaana ʕbaara ʕan raml*[i] *w-ʔasmant*[i] *w-zalaṭ wi-mayya b-yitxilṭu maʕa baʕḍ* concrete consists of sand, cement, gravel and water mixed together. - iva *mitxiliṭ*.

انخلط *ʔinxalaṭ* = *ʔitxalaṭ*.

خلّط *xallaṭ* /vt/ to mix thoroughly, blend thoroughly. *xallaṭ-ha bit-turaab* he mixed it thoroughly with the earth. - vn *taxliiṭ*; ava/pva *mixallaṭ*.

مخلّط *mixallaṭ* /adj */ cross-bred, hybrid.

اتخلّط *ʔitxallaṭ* /vi/ to be thoroughly mixed or blended. - iva *mitxallaṭ*.

اختلط *ʔixtalaṭ* /vi/ **1** to mix, mingle, socialize. *ma-bi-yḥibbuu-f yixtilṭu b-ḥadd* they don't like to mix with anyone. **2** to become confused, get in a mess. *ʔixtalaṭ ʕalayya l-ʔamr* I was at a loss to understand the matter. - vn *ʔixtilaaṭ*; ava *mixtiliṭ*.

مختلط *muxtalaṭ* /adj/ mixed. *madrasa muxtalaṭa* a coeducational school. *ʔil-maḥaakim il-muxtalaṭa [obsol]* the mixed courts.

خ ل ط ب

خلطبيصة *xalṭabiiṣa* /n/ huge mess, chaotic situation.

خلطبيطة *xalṭabiiṭa* = *xalṭabiiṣa*.

خ ل ع

خلع *xalaʕ (a)* /vt/ **1** to pull out, extract. *ʔixlaʕ il-watad mil-ʔarḍ* pull the peg out of the ground! *ruḥt*[i] *ʔaxlaʕ sinaan-i* I went to have my teeth pulled. ‖ *bi-xalʕ id-dirs* with the greatest effort, as in *xadnaa-ha minnu b-xalʕ id-dirs* we got it from him only with the greatest difficulty. **2a** to rip off, tear off, dislocate. *xalaʕt il-ɢamiiṣ min ʕalee* I ripped the shirt off him. *ʔil-baab maxluuʕ* the door is off its hinges. **2b** to give (s.o.) a jolt of sudden anxiety, disquiet etc. *xalaʕt-i-ni bil-xabar da* you really shook me with that news. — /vi/ **3** to get away, take oneself off. *xalaʕt*[i] *minhum bil-ʕafya* I managed to get free of them with great difficulty. *ma-tixlaʕ madaam iʃ-ʃuɣl*[i] *xilaṣ* you get along now that the work is finished. - vn *xalʕ*; ava *xaaliʕ*; pva *maxluuʕ*.

خلاعة *xalaaʕa*↑ /n/ indecency, immodesty.

خليع *xaliiʕ*↑ /adj */ **1** indecent, immodest. *bint*[i] *xaliiʕa* an immodest girl. *fustaan xaliiʕ* an indecent dress. **2** /invar/ *[rur]* second-hand. *gazma xaliiʕ* second-hand pair of shoes.

اتخلع *ʔitxalaʕ* /vi/ **1** to be pulled out, be extracted. **2** to be detached, be dislocated. *kitf-i txalaʕ* my shoulder was dislocated. ‖ *ɢalb-i txalaʕ mil-xoof* I was unnerved by fear. - iva *mitxiliʕ*.

انخلع *ʔinxalaʕ* = *ʔitxalaʕ*. - iva *minxiliʕ*.

خلّع *xallaʕ* /vt/ **1** to unhinge, dislocate. *xallaʕ kull*[i] *ʔabwaab il-beet* he took all the doors of the house off their hinges. **2** to pull, extract (teeth, fingernails etc.). — /vi/ **3** to become loose or rickety. *ʔil-ʕarabiyya*

xallaʕit mil-maṭabbaat the car became rickety because of the bumps. *baab in-naggaar mixallaʕ [prov]* ≈ the cobbler's children are ill-shod. - vn *taxliiʕ*; ava/pva *mixallaʕ*.

مخلّع *mixallaʕ* /adj */ exhausted.

اتخلّع *ʔitxallaʕ* /vi/ **1** to be detached, be dislocated. **2** to be pulled out, be extracted. - iva *mitxallaʕ*.

خ ل ف

خلف *xalaf*[1] *(i)* /vt/ **1** to break, fail to keep. *xalafit il-maʕaad* she broke the appointment. *xalaf kalaam-u* he went back on his word. **2** to provide a compensation for (of God). *rabb-i-na yixlif-u ʕaleek bil-ḥalaal* may God compensate you well for it! (as a condolence to one who has suffered a loss). *ʔil-miʕawwiq mixlif* ≈ God will compensate you (for your loss). — /vi/ **3** to act contrarily. *ʔiʒ-ʒuruuf xalafit* things went wrong. - vn *xalafaan, xulf*; ava *xaalif, mixlif*; pva *maxluuf*.

خلف *xalf* /n/ back, rear. *huguum mil-xalf* an attack from the rear.

¶ *xalfan* /adv/ to the back, to the rear. *xalfan dur* about turn!

خلفي *xalfiˆ* /adj */ **1** rear, hind, back. *ʔil-baab il-xalfi* the back door. **2** to the rear, backward. *ʁaṭsa xalfiyya* a backward dive.

خلفيّة *xalfiyyaˆ* /n pl *-aat*/ background. *ʔil-xalfiyya s-saqafiyya* the cultural background.

خلف *xilf: xilf*[i] *xlaaf* pointing in opposite directions, head to toe, back to back. *ʔis-sardiin mitraṣṣ*[i] *xilf*[i] *xlaaf* the sardines are arranged head to tail. *kull*[i] *dikkiteen xilf*[i] *xlaaf* each pair of benches is back to back.

خلف *xilfa* /coll n/ **1** offspring, children. ‖ *xilfit ʕafariit* a naughty child. **2a** second growth (of a crop). **2b** new shoot (of a plant).

خلف *xalaf*[2] /coll n/ children, off-spring, descendants. *ʔil-xalaf wis-salaf* descendants and ancestors. *xayru xalaf li-xayri salaf* like (good) father, like (good) son.

خلاف *xilaaf* **1** /n pl *-aat/* **1a** difference, disparity. **1b** disagreement, difference of opinion. **2** (also *bi-xlaaf*) /prep/ besides, over and above, in addition to. *ʔana dafaʕt*[i] *ʕiʃriin gineeh naqd*[i] *(bi-)xlaaf il-ḥagaat illi ʃtaret-ha* I paid twenty pounds cash quite apart from the things I bought.

¶ *wi-xlaaf-u* et cetera, and so on.

خلافة *xilaafa* /n/ **1** Caliphate. **2** successorship in a Sufi order.

خليفة *xaliifa* /masc n pl *xulafa*/ **1a** successor. **1b** successor of the founder of a Sufi order. **2** Caliph.

خلّف *xallif* /vt/ **1** to beget or bear (offspring). *ʕaawiz yitgawwiz wi-yxallif ʔawlaad* he wants to get married and have children. *xallifit ʕayyil waaḥid* she had one child. **2** to leave behind, bequeath. *ʔil-ḥubb*[i] *xallif-li l-ʕaʒaab* love left me with torment. - vn *xilfa, xalaf*; ava/pva *mixallif*.

تخاليف *taxaliif* /pl n/ offspring. ‖ *ʔumm it-taxaliif* cramp in the region of the womb occurring after childbirth.

مخلّفات *muxallafaat* /pl n/ **1** things left behind. *muxallafaat ig-geeʃ il-ʔingiliizi* the (saleable) material left behind by the British army. **2** byproducts. *muxallafaat il-xilaal* cereal by-products.

اتخلّف *ʔitxallif* /vi/ **1** to fail, fall short, under-achieve. *ʔitxallif ʕan il-ḥuḍuur* he failed to come. *ʔitxallif ʕan it-tagniid* he failed to report for military service. *midd*[i] *laḥsan nitxallif ʕan maʕaad il-ʔaṭr* hurry up or we'll miss the train. **2** to fall behind, regress. *ʔil-bint itxallifit ʕan il-magmuuʕ wi-taahit* the girl fell behind the group and got lost. *ʔil-balad itxallifit* the country regressed. **3** to be born. *ʔitxallif-lu walad mig-gawaaz il-ʔawwalaani* he had a child by the first marriage. - ava/iva *mitxallif*.

متخلّف *mutaxallif* /adj */ **1** underdeveloped. *bilaad mutaxallifa* underdeveloped countries. *ʕayyil mutaxallif* a retarded child. **2** *[acad]* allowed to carry a maximum of two failed subjects over into next year (of a university student).

خالف *xaalif* /vt/ **1** to go against, act contrary to. *xaalif il-ʔamr* he disobeyed the order. *ʔana b-axalf-ak fir-raʔy*[i] *da* I oppose you in that opinion. *xaalif tuʕraf [prov]* go against (convention) and you'll get known. ‖ *firiik mixaalif* one who is always disagreeing. **2** *[leg]* to impose a fine or penalty on (s.o.) for a misdemeanour. - vn *mixalfa*; ava *mixaalif*.

مخالفة *muxalfa* /n pl *-aat/* **1** transgression, violation. **2a** *[leg]* misdemeanour. **2b** traffic violation. **3a** fine or penalty (for a misdemeanour). **3b** traffic ticket.

اتخالف *ʔitxaalif* /vi/ **1** to have a dispute, differ with one another. **2a** to be disputed. **2b** to be disobeyed. **3** *[leg]* to have a fine or penalty (for a misdemeanour) imposed upon one. - ava/pva *mitxaalif*.

اختلف *ʔixtalaf* /vi/ **1** to differ, be different, vary. *ʈalabaat iz-zabaayin bi-tixtilif* the customers' requests vary. *bi-yixtilif ʕadad-ha bi-xtilaaf il-markib* their number varies according to the type of ship. *kull*[i] *suuq muxtalif ʕan it-taani* every market differs from the next. ‖ *ʕala ʔixtilaf-hum* according to their various types, as in *ʔil-muhandisiin ʕala xtilaf-hum* all the various sorts of engineers. **2** to differ in opinion, disagree. *madaam ixtalafna niʕmil tagriba* since we disagree we'll make a test. - vn *ʔixtilaaf*; ava *muxtalif, mixtilif*.

اختلاف *ʔixtilaaf* /n pl *-aat/* difference.

خ ل ف ن

خلفن *xalfin* /vt/ to confuse, muddle, entangle. *ʔil-quṭṭa xalfinit bakarit il-xeeṭ* the cat tangled up the spool of thread. *ḥaṣal xalfana fil-ḥikaaya* there was chaos and confusion in the matter. - also *laxfin*. - vn *xalfana*; ava/pva *mixalfin*.

اتخلفن *ʔitxalfin* /vi/ to be confused, be muddled, be entangled. - iva *mitxalfin*.

خ ل ق

خلق *xalaq (a)* /vt/ to create. *wi-lli xalaq il-xalq* by the Creator of creation! (an oath indicating anger). *di ʒamaliyya ṣnaʕiyya ma-fi-haa-ʃ xalq* this is an industrial process with nothing creative about it. ‖*ya mawlaay ka-ma xalaqt-i-ni* (O Lord, I am as you created me) ≈ I am reduced to penury, I have nothing left. - *ʔil-xaaliq in-naaṭiq* ≈ the spit and image, as in *da l-xaaliq in-naaṭiq ʔaxuu* he's the spit and image of his brother. - vn *xalq*; ava *xaaliq*; pva *maxluuq*.

الخلق *ʔil-xalq* /n/ **1** creation, the created universe. ‖*siib il-xalq[i] lil-xaaliq* (leave creation to the Creator) ≈ what others do is none of our business. - *wa-li-llaahi* (or *luu*) *fi-xalq-i-hi fuʔuun* ≈ God makes them all types! people are odd! **2** /fem and pl/ people. *ʔil-xalq illi sakniin gambiina* the people living next to us. *fiḍlu yitqatlu maʕa baʕḍ[i] l-ḥadd[i] ma l-xalq[i] tlammit* they went on fighting till people gathered around. ‖*ya xalq* rhetorical appeal for help, witness etc., addressed to no one in particular (cf *ya naas*). - *zayy il-xalq* like everyone else, as in *ʔiʕmil zayy il-xalq* - *laazim tifizz* behave normally - do you have to be different? - *baab il-xalq* a square in north-east Cairo.

خالق *xaaliq* /n/ **1** Creator, Maker (epithet of God). **2** creator, designer, inventor. ‖ *ʔil-xaaliq in-naaṭiq* see *xalaq*.

مخلوق *maxluuq* /n pl *maxaliiq, maxluqaat*/ creature, created being.

خلق *xulq* **1** /n pl *ʔaxlaaq*/ disposition, temper. *xulq-u dayyaq* (or *ṣaʕb*) or *ʔaxlaaq-u dayyaqa* (or *ṣaʕba*) he's quick-tempered. ‖*haddi ʔaxlaaq-ak* (or *xulq-ak*) calm down! - *ṭallaʕ ʔaxlaaq-u fiyya* he vented his rage on me. **2** *ʔaxlaaq* /pl n/ **2a** character, nature. *ʔaxlaaq-ak kiwayyisa* you're a decent sort. **2b** morals, manners. *gayy[i] tiddii-ni dars[i] fil-ʔaxlaaq* you're going to teach me manners?

خلقة *xilqa[1]* /n/ **1** creation. *ʔana xilqit rabb-i-na zayyi zayyak* I am God's creation (too, so) I'm as good as you are! **2** /pl *xilaq*/ **2a** face, physiognomy. **2b** ugly mug. **3** *[euphem]* penis.

خلقة *xilqa[2]* /adv/ already, as it is. *ʒammaal bi-yiddii-ni f-fuxl[i] w-ʔana maʃɣuul xilqa* he keeps giving me more work when I'm already busy.

خلقة *xalaqa* /n pl *-att*/ **1** rag. **2** (the only) garment one owns. - *xalaqaat* /pl n/ **3** *[non-Cairene]* clothes.

خلقي *xilaqi, xulaqi* /adj */ quick-tempered.

خليقة *xaliiqa* /n/ creation. *min ʔawwil il-xaliiqa l-ḥadd[i] dilwaqti* from the beginning up to now.

خلايق *xalaayiq* /pl n/ people. *siib il-xalaayiq fi-ḥal-ha* leave people to their own affairs.

خلاّق *xallaaq, xallaaq↑* /n/ **1** Creator (epithet of God). **2** /adj */ creative. *fannaan xallaaq* a creative artist.

اتخلق *ʔitxalaq* /vi/ to be created. *ʔil-bani ʔaadam itxalaq min ṭiin* Man was created from clay. ‖ *ʔitxalaqt[i] fiṭ-ṭurfi* I was born in the pickle trade. - iva *mitxiliq*.

انخلق *ʔinxalaq* = *ʔitxalaq*. - iva *minxiliq*.

خلّق *xallaq* /vt/ **1** to put together from bits and pieces, make up. *xadit il-biluzaat il-ɡadiima w-xallaqit minha fustaan* she took the old blouses and made up a dress out of them. **2** *[chem]* to synthesize. - vn *taxliiq*; ava/pva *mixallaq*.

اتخلّق *ʔitxallaq* /vi/ **1** to be put together from bits and pieces, be made up. **2** *[chem]* to be synthesized. **3** to lose one's temper. *tikallim-u duɣri yitxallaq* the moment you speak to him he flies into a rage. - ava/iva *mitxallaq*.

خ ل ل [1]

خلّ *xall* /n/ vinegar. ‖*xallaa-ha xall* he went too far, he overstepped the mark.

خلاّت *xallaat* /pl n/ acetate. *xallaat ir-ruṣaaṣ* acetate of lead.

خلّل *xallil* **1** /vt/ to pickle, preserve in vinegar or brine. **2** /vi/ to become pickled. *ʔiz-zatuun bi-yaaxud kaam yoom ʒafaan yixallil* how many days do the olives take to become pickled? ‖*xallil fis-sanawiyya l-ʒaamma* he got stuck at the secondary certificate stage, he spent years getting the secondary certificate. - vn *taxliil*; ava/pva *mixallil*.

مخلّل *mixallil* /coll n, pl *-aat*/ pickle(s), pickled vegetable(s).

مخلّلاتي *mixallilaati* /n pl *-yya*/ maker and/or seller of pickles.

اتخلّل *ʔitxallil* /vi/ to be pickled, be preserved in vinegar, or brine. - iva *mitxallil*.

خ ل ل [2]

خلّة *xilla* /n/ **1** plant (Ammi visnaga), the seeds of which have medicinal properties and the dried rays of the umbels of which are used as tooth-picks. **2** (also

xilla ʃtaani) Bishop's weed (Ammi majus), the seeds of which have medicinal properties. — /pl *xilal*/ **3** tooth-pick made from a dried ray of Ammi visnaga.

خلل *xalal* /n/ disorder, defect. *fii xalal fil-makana* the machine is out of order. ‖*ʕandu xalal fil-muxx* he's mentally deranged.

خلل *xulal* /n/ lunacy, craziness. - /adjectivally/ *da raagil xulal* he's a crazy man!

أخلّ *ʔaxall*[1] /el/ more/most crazy.

خلال *xilaal*↑ /prep/ **1** (also *min xilaal*) through. *ʃaaf-ak min xilaal if-ʃibbaak* he saw you through the window. *wiqiʕ min xilaal ṣawabʕ-i* it fell through my fingers. **2** (also *fi-xilaal*) during, within the period of. *xilaal is-sana* during the year. *ʕamalt*[i] *ʔeeh fi-xlaal il-ḥarb* what did you do during the war?

مخلول *maxluul* /n pl *maxaliil*/ lunatic.

اتخلّ *ʔitxall* /vi/ to become unbalanced. *ʔitxall*[i] *tawazn-u* he lost his equilibrium. ‖ *ʔitxall*[i] *f-muxx-u* (or *f-ʕaql-u*) he went potty. - ava *mitxall*.

انخلّ *ʔinxall* = *ʔitxall*. - ava *minxall*.

أخلّ *ʔaxall*[2]↑ /vi/ **1** to fail to meet an obligation. *ʔif-ʃirka ʔaxallit bit-taʕaaqud* the company broke the contract. **2** to commit a violation, transgress. *muxill*[i] *biʃ-ʃaraf* dishonourable. *muxill*[i] *bil-ʔadab* immoral. - vn *ʔixlaal*; ava *muxill*.

اختلّ *ʔixtall* /vi/ to become unbalanced or upset. *ʕaql-u xtall* his mind became unbalanced. *ʔil-markib tawazun-ha xtall*[i] *w-mayyilit* the ship became unbalanced and listed. ‖*xud min it-tall*[i] *yixtall [prov]* (take from the hill and it will topple) ≈ wealth can be squandered gradually as well as quickly. - ava *mixtall*.

[3] خ ل ل

خلّ *xill* /n pl *xillaan*/ close friend, intimate.

خليل *xaliil* /n/ lover.

خليلة *xaliila* /n/ mistress, female lover.

[4] خ ل ل

خلول *xuluul: ʔumm il-xuluul* /coll n/ mussel(s). ‖ *ʔakal bi-ʕaql-i ʔumm il-xuluul* he fooled me.

خ ل م س

خلمس *xalmis* /vi/ **1** to doze, doze off. **2** *[coarse slang]* to make love (to a woman), have it off (with a woman). - vn *xalmasa*; ava/pva *mixalmis*.

خ ل ن ج

خلنجان *xilingaan, xulingaan* /n/ briar root.

[1] خ ل و

خلاوة *xilaawa* <perh Copt> /n pl *-aat*/ rope, joined to a tow rope, that the tower of a boat wraps around his torso.

[2] خ ل و see [1] خ ل ى : *xiliwiw, xuluww, xilwa, xalwati*

[1] خ ل ى

خلى *xili (a)* /vi/ to become empty, become clear. *ʕaayiz yiṭaffiʃ-ni ʕaʃaan ig-gaww*[i] *yixlaa-lu* he wants to get rid of me so that he can do as he pleases. ‖*ʕalb-u xaali* he's not in love, he's fancy-free. - *baal-u xaali* he's carefree. - vn *xiliww, xuluww*; ava *xaali*.

¶ *xili bi-* to take (s.o.) aside, be alone with (s.o.). *ṭuul il-waʕt*[i] *w-huwwa ʕaayiz yixla bil-bint* all day long he's been wanting to be alone with the girl.

خلى *xala*[1] *(i)* /vt/ **1** to empty, clear. *xalu l-beet min is-sukkaan* they cleared the house of tenants. ‖*xala nafs-u min il-masʔuliyya* he disclaimed the responsibility. - *xala ṭ-ṭaraf [leg]* to clear oneself of claims against one (e.g., a former employer). - *xala sabiil-u* he set him at liberty. **2** to bone, remove the bones from. *ḥamaam maxli* boned pigeons. - vn *xiliww, xuluww*; ava *xaali*; pva *maxli*.

¶ *xala bi-* to let down. *ḥa-yixli biik waʕt iz-zanʕa* he will let you down at the time of need.

خلوّ *xiliww, xuluww* (also *xiliww*[i] *rigl*) /n pl *-aat*/ key-money.

خوالى *xawaali: ʔil-ʔayyaam il-xawaali* ≈ the good old days, the days of carefree fun.

خلوة *xilwa* /n pl *-aat, xalaawi*/ private room (e.g., in a mosque, for meditation, or in a bath-house).

خلوتى *xalwati* /n pl *-yya*/ **1** Sufi practising reclusion and solitary meditation. **2** member of the Khalwati order of Sufis.

خلا *xala*[2] /n/ openness, open ground. *fil-xala* in the open air.

خليّة *xaliyya* /n pl *xalaaya*/ **1** bees' nest, beehive. **2a** *[biol]* cell. **2b** *[elec]* cell. **2c** cell (in a political organization or the like).

خلّى *xalla* /vt; imper w 2nd pers pl suff *xallii-ku*/ **1** to permit, allow. *xallii-ni ʔadxul* let me in! *rabb-i-na raḥiim ʔinnu xallaa-ki tistaʕbili r-rabiiʕ bi-ʕalb*[i] *gdiid* Our Lord is merciful, he has allowed you to meet the spring in a new frame of mind. ‖*xalli ʕannak* let me relieve you of that, let me take that from you. **2a** to cause to be. *xallaa ʔaṣyar* he made it smaller. *xallaa-ni maskiin* he made me miserable. *xalli f-ʕalb-ak raḥma* have some pity! *ʔaʏayyar ir-ruxṣa w-ʔaxallii-ha bi-sm-i*

I'll change the licence and have it put in my name. *xallii-k nafiiṭ* snap to it! *xallii-k zooq* have some manners! **2b** to cause (s.o. to do s.th.). *xalli kull[i] waaḥid yifuuf nafs-u* let each look to himself! *xalli r-rayyis yigiib il-biira* have the waiter bring the beer! *huwwa s-sinn illi bi-yxallii-ha tinsa* it's age that makes her forget. *ruuḥ ɛand il-ḥakiim xallii yikfif ɛaleek* go to the doctor and get him to give you an examination. **3** to keep, preserve. *ḥ-axallii-ha ḥtiyaaṭi* I'll keep it as a spare. *xallii-k maɛaaya* hang on! stay with me (while I do something, say something further etc.)! *xallii-k ɛaf-fimaal* stay on the left! *xallii-ni ɛal-baal* keep me in mind! ‖*xallii-k* stay where you are! - *xallii-k maɛa llaah* trust in God! - *xallii-k fi-ḥaal-ak* mind your own business! - *xallii f-ḥaal-u* leave him alone! - *xallii ɛal-alla* leave the solution to God! don't worry about it! - *rabb-i-na* (or *ʕallaah*) *yixallii-k* God preserve you (in thanks for a service, or enquiry after one's health etc.). - *rabb-i-na* (or *ʕallaah*) *yixalli(-hum-lak)* may God preserve your children for you! **4** to leave, leave behind. *xallit-u fil-beet* she left it in the house. ‖*ʃatam-u w-ma-xalla-luu-ʃ* he covered him with insults. - *la xalla wala baqqa* he left nothing unsaid or undone. - *xalla ... bi-ɛafya [women]* good-bye (said by the person leaving), as in *xallenaa-kum bi-ɛafya* we take our leave of you, good-bye. - ava *mixalli*.

اتخلّى ʔitxalla: ʔitxalla ɛan to abandon. *titxalla ɛanni f-ẓuruuf ẓayy[i] di* you'd abandon me in such straits? *diḥik ɛaleeha w-baɛdeen itxalla ɛanha* he made a fool of her and then he jilted her. - ava *mitxalli*.

أخلى ʔaxlaↄ = *xala[1]*. - vn ʔixla, ʔixlaaʔ.

اختلى ʔixtala /vi/ to become alone, be left on one's own. *saaɛit ma tixtili tibki* as soon as she's on her own she starts crying. *ɛaawiz ʔaxtili biik* I want to see you alone. - ava *mixtili*.

استخلى ʔistaxla /vt/ **1** to consider empty. **2** to select for emptiness. - ava *mistaxli*.

¶ *ʔistaxla bi-* to take the opportunity to be alone with (s.o.).

خ ل ى[2]

مخلاة *mixla* /n pl *maxaali*/ **1** feed bag, nose-bag. **2** *[mil]* duffel bag.

خ م د

خمد *xamad (i)* /vt/ **1** to cause to be quiet, cause to shut up. *ʔixmidi l-ɛayyil il-maḍruub da* shut that blasted child up! **2** to extinguish, put out. *xamadu s-sawra* they suppressed the revolution. - vn *xamadaan, xamd, xumuud*; ava *xaamid*; pva *maxmuud*.

انخمد ʔinxamad /vi/ **1a** to become quiet, shut up. *ʔil-waad inxamad wi-naam* the kid shut up and went to sleep. *ʔinximid ʔuqɛud* shut up and sit down! **1b** to crash out, sleep from exhaustion. **2** to be extinguished, be put out. - ava/iva *minximid*.

اتخمد ʔitxamad = *ʔinxamad*. - ava/iva *mitximid*.

خ م ر

خمر *ximir* or *xumur (a)* /vi/ to prove, rise (of dough). - vn *xumraan, xamaraan*; ava *xaamir, xamraan*.

خمر *xamr* /coll n, pl *xumuur*/ alcoholic beverages (beer generally excepted).

خمرة *xamra* = *xamr*.

خمرى *xamri* /adj pl *-yya*/ tawny brown (of complexion).

خمرجى *xamurgi* /n pl *-yya*/ alcoholic, alcohol addict.

خمير *xamiir* /n/ **1** liquorice water. **2** fermented sugar-cane juice.

خميرة *xamiira* /n/ any fermenting agent (e.g., yeast, yoghurt). *xamiirit biira* brewers' yeast. ‖*wiff-u yiqtaɛ il-xamiira mil-beet* (his face drives the yeast from the house) he's a jinx, he brings bad luck. - *xamiirit il-ɛarab* Colchicum richii (a plant, one of the ingredients of *muxaat*).

خمّارة *xammaara* /n pl *-aat, xamamiir*/ seedy bar, dive.

خمّر *xammar* /vt/ **1** to ferment, leaven. **2** to mix (earth and straw) with water and leave to work till the mixture reaches the right consistency for making bricks or daub. **3** to temper (metal). **4** to blend, mix well. — /vi/ **5** to ferment. **6** to improvise poetry. - vn *taxmiir*; ava/pva *mixammar*.

اتخمّر ʔitxammar /vi/ passive of *xammar*. - iva *mitxammar*.

اختمر ʔixtamar /vi/ to ripen, mature. *ʔil-fikra xtamarit fi-muxx-i* the idea ripened in my mind. - ava *mixtimir*.

خ م س

خمسة *xamsa[1]* /num: in absol state, in apposition, or w foll n sing in contexts of ordering and itemizing; pl *-aat*/ five. *miyya w-xamsa bass* one hundred and five only. *humma xamsa wi-ḥna talaata* they are five and we are three. *xamsa saax* five piastres. *xamsa kiilu* five kilos. *firibt[i] xamsa biira* I drank five beers. *fahr[i] xamsa* May. ‖*xamsa f-ɛeen-ak* five (fingers) against your (evil) eye! (accompanied by thrusting the palm of the hand with fingers outstretched towards the person addressed). - *xamsa wi-xmeesa* (1) formula used to ward off the evil eye. (2) charm in the shape of a hand worn for protection against the evil eye. - *ʔiɛmil bi-xamsa w-ḥaasib il-baṭṭaal [prov]* ≈ doing a little is better than

doing nothing at all.
¶ *xamsaat* /adv/ in fives.
خمسة *xamsa*[2] /n invar/ little bit, trifle, smidgen. *ʕistanna xamsa* hang on a tick! *xamsa ʠyaafa* a touch of elegance.
خمساوى *xamsaawi* /adj/ of five units, fivefold.
خمس *xums* /n pl *ʕaxmaas*/ one fifth, a fifth part. ‖*ḍarab ʕaxmaas fi-ʕasdaas* ≈ to rack one's brains.
خمس *xamas* /num: in constr w foll **n pl**; usu *xamast* when followed by n pl ordinarily w initial hamza/ five. *xallifit xamas banaat* she gave birth to five girls. *xamast alaaf* five thousand. *xamast iyyaam* five days. *xamas ʕawlaad* five children.
خماسى *xumaasi* /n pl *xumasiyyaat*/ *[mus]* quintet.
خميس *xamiis* /n/ **1** /pl *ʕixmisa*/ (also *yoom xamiis*) a Thursday. *yoom il-xamiis* (this) Thursday. ‖*xamiis il-ʕahd [Chr]* Maundy Thursday. **2** /pl *ximsaan*/ **2a** Thursday visit to a grave by members of the deceased's family, attended, especially in the case of the first two visits, by certain traditional practices. *b-aʕmil-lu ximsaan baʠaa-lu ʕafar siniin* I've been visiting his grave every Thursday for ten years. **2b** memorial gathering usually at the home of the deceased on the two Thursdays following the death. ‖*ʕil-xamiis iṣ-ṣuxayyar* visit to the deceased's grave on the first Thursday after the death unless the first Thursday falls within the immediate (usually three-day) mourning period, in which case the visit is made on the next following Thursday, attended by the distribution of money and food to the poor. *ʕil-xamiis ik-kibiir* visit to the deceased's grave on the Thursday following that of *ʕil-xamiis iṣ-ṣuxayyar* attended by the same practices, plus a reception for the acceptance of condolences and the reading of the Koran. **2c** *[obsol]* money traditionally paid every Thursday to a Koranic teacher by the father of a child. *xud xamiis-u ʕin ʃa-lla ma-ʠara [prov]* (take his *xamiis* even if he hasn't recited) ≈ get as much as you can, even if you do not fulfil your obligations.
خميسة *ximeesa* /n pl *-aat*/: *xamsa w-ximeesa* (1) formula used to ward off the evil eye. (2) charm in the shape of a hand worn for protection against the evil eye.
خامس *xaamis* /adj/ fifth.
خمستاشر، خمسة عشر *xamastaaʃar* **1** /num pl *-aat*/ fifteen. **2** *ʕil-xamastaaʃar* /adj invar/ the fifteenth.
خمسين *xamsiin* **1** /num pl *-aat*/ fifty. *raagil fil-xamsinaat* a man in his fifties. **2** *ʕil-xamsiin* /adj invar/ the fiftieth. **3** *[Chr]* /n/ *ʕil-xamsiin* Pentecost.
خمسينى *xamsiini* /adj */ Pentecostal.
الخماسين *ʕil-xamasiin* /n/ a hot, dust-laden southern wind that blows on occasion during the spring.
خماسينى *xamasiini* /adj/ characterized by the conditions prevalent during *ʕil-xamasiin*, hot, dusty and windy (of weather).
خمسمائة *xumsumiyya* **1** /num pl *-aat*/ five-hundred. **2** *ʕil-xumsumiyya* /adj invar/ the five-hundredth.
خمّس *xammis* **1** /vt/ to do for a fifth time. **2** /vi/ to share a cigarette. *bi-yḥibbu yxammisu maʕa baʕḍ* they like to pass the cigarette around. - vn *taxmiis*; ava/pva *mixammis*.
تخميسة *taxmiisa* /pl *-aat*/ unit noun of *taxmiis*.

خ م ص
أخمص *ʕaxmaṣ↑, ʕaxmuṣ↑: ʕaxmaṣ il-ʠadam* /pl *ʕaxaamiṣ il-ʕaʠdaam*/ instep of the foot.

خ م ل
خمول *xumuul↑* /n/ lethargy.

[1] خ م م
خمّ *xamm (u)* /vt/ **1** to gulp down, bolt (food). *ma-txumm[i]-ʃ il-ʃakl[i] kida - ʕumdux kuwayyis* don't bolt your food like that - chew it well! **2** to dupe, deceive. *ʕinta ḥa-txumm[i] miin* who are you trying to fool! - vn *xamm, xamamaan*; ava *xaamim*; pva *maxmuum*.
خمّة *xamma* /inst n, pl *-aat*/ fraud, trick.
اتخمّ *ʕitxamm* /vi/ **1** to be gulped down (of food). **2** to be duped, be deceived. - iva *mitxamm*.
انخمّ *ʕinxamm* = *ʕitxamm*. - iva *minxamm*.

[2] خ م م
خميمى *xamiimi* /adj invar/ soft (of unripe dates picked from under the tree).
خمّم *xammim* /vi/ to become soft (of unripe dates picked from under the tree). - vn *taxmiim*; ava *mixammim*.

[3] خ م م
خمّ *xumm* /n pl *ʕaxmaam*/ mud coop for chickens or poultry (see Pl.C, 5). ‖*xumm[i] noom* a person given to excessive sleep, an extremely lazy person. - also *xunn*.

خ م ن
خمّن *xammin* **1** /vt/ to guess, surmise. *xammin miin ga* guess who came! *kunt[i] mxammin il-ḥikaaya min zamaan* I had worked out the whole thing long ago. **2** /vi/ to make a plot, lay a plan. *xammint-i-lu ʕala ʕalʠa* I determined to give him a beating. - vn *taxmiin*; ava *mixammin*.
تخمينة *taxmiina* /inst n, pl *-aat*/ **1** a guessing. **2** a plot.
اتخمّن *ʕitxammin* /vi/ to be guessed at, be surmised. - iva *mitxammin*.

خ ن ت see ² خ ن س : *xinta, xunta*

خ ن ث see ² خ ن س

خ ن ج ر
خنجر *xangar* /n pl *xanaagir*/ dagger.

خ ن خ ن
خنخن *xanxin* /vi/ to speak with a nasal tone. - vn *xanxana*; ava *mixanxin*.
اتخنخن *ʃitxanxin* /vi/ to become nasal. - ava *mitxanxin*.

خ ن د ق
خندق *xandaq*[1] /vi/ *[mil]* to dig in, entrench. - vn *xandaqa*; ava *mixandaq*.
خندق *xandaq*[2] /n pl *xanaadiq*/ ditch, trench.

خ ن ز ى ر
خنزير *xanziir* /n pl *xanaziir*/ pig. *xanziir barri* wild boar. ‖*raagil xanziir* despicable man.
خنزيرة *xanziira* /n pl *-aat*/ **1** sow. **2** scrofula. **3** *[constr]* profile board.

[1] خ ن س
خنس *xanas (i)* /vi/ to fall silent. *wi-marra waḥda raaḥ qaaṭiɛ xans* and all of a sudden he fell silent. - vn *xans*; ava *xaanis*.
خنّاس *xannaas: ʃil-wiswaas il-xannaas* epithet of the Devil as tempter.
خنّيس *xanniis* /adj/ sly, guileful.
اتخنّس *ʃitxanas = xanas*. - ava *mitxinis*.
خنّس *xannis* /vi/ to be elusive. *ma-tḥawil-fi txannis maɛaaya* don't try to avoid the issue with me. ‖*ʃin-nuur xannis* the light dimmed. - vn *taxniis*; ava *mixannis*.

[2] خ ن س
خنثى *xinta, xunta* **1** /adj invar/ effeminate (of a man). **2** /n/ hermaphrodite.
خنوثة *xunuusa* /n/ effeminacy.
مخنّث *muxannas* /adj */ effeminate, weak (of a man).
اتخنّث *ʃitxannis* /vi/ to become effeminate or weak (of a man). - ava *mitxannis*.

خ ن ش ر
خنشر *xanfar* /vi/ **1** to become rugged, tough and masculine. *kaan fakl-u gamiil wi-baɛd[i] mudda xanfar* he used to be fine-featured, but after a while his looks became craggy. **2** to become coarse or crude. - vn *xanfara*; ava *mixanfar*.

خنشور *xanfuur* /pl *xanafiir*/ **1** /n/ **1a** *[slang]* man, guy. *ɢaɛdit xanafiir* a stag party. **1b** tough-guy. **2** /adj/ **2a** tough, rugged (of people). **2b** coarse, crude (of people).
خناشيرى *xanafiiri* /adj/ pertaining to *xanfuur*.
اتخنشر *ʃitxanfar* /vi/ **1** to break (of the voice). **2** to be thick and husky (of the voice). - ava *mitxanfar*.

خ ن ص ر
خنصر *xanṣar*[1] /n pl *xanaaṣir*/ **1** little finger. **2** *[butcher]* small sharp knife used for skinning, boning etc. **3** (also *ṭarf il-xanṣar*) cut of meat from the ribs. **4** molar tooth (of an animal). **5** *[arch]* squinch.
خنصر *xanṣar*[2] /vi/ **1** *[butcher]* to wield a *xanṣar*. **2** to steal in small amounts, pilfer. *ʃil-xaddaam bi-yxanṣar min filuus il-xuḍaar* the servant is always pilfering from the vegetable money. — /vt/ **3** to take in (cloth etc.). *xanṣar-li l-wisṭ[i] ʃiwayya* take the waist in a bit for me. - vn *xanṣara*; ava *mixanṣar*.
اتخنصر *ʃitxanṣar* /vi/ to be pilfered. - iva *mitxanṣar*.

خ ن ف
خنف *xanaf* <Copt> /n/ nasality of speech.
أخنف *ʔaxnaf* /adj, fem *xanfa*, pl *xunf*/ characterized by nasality of speech.
خنافة *xanaafa* /n/ nasality of speech.
اتخنف *ʃitxanaf* /vi/ to become afflicted with nasal speech. - ava *mitxinif*.
انخنف *ʃinxanaf = ʃitxanaf*. - ava *minxinif*.
خنّف *xannif* **1** /vi/ to speak with a nasal voice. **2** /vt/ to make nasal. *xannif ṣoot-u* he made his voice nasal. - vn *taxniif*; ava/pva *mixannif*.
اتخنّف *ʃitxannif* /vi/ to be made nasal (of a voice). - iva *mitxannif*.
اتخانف *ʃitxaanif* /vi/ **1** to speak through the nose. **2** to put on airs, behave snobbishly. - ava *mitxaanif*.

خ ن ف ر
خنفر *xanfar* /vi/ **1** to speak with a nasal tone. **2** to snort. *ʃil-waad ʃaxad bard[i] w-ṭuul in-nahaar ɢaaɛid yixanfar* the boy has caught a cold and snuffles all day long. ‖*xanfar fin-noom* he fell into a deep sleep. — /vt/ **3** to make nasal. - vn *xanfara*; ava *mixanfar*.
اتخنفر *ʃitxanfar* /vi/ to be made nasal. - iva *mitxanfar*.

خ ن ف س
خنفس *xunfis* /n/ **1** /coll/ beetle(s). **2** /n pl *xanaafis*/ hippie, long-haired male. — *ʃil-xanaafis* /pl n/ **3** the Beatles.
خنفسة *xunfisa* /unit n, pl *-aat, xanaafis*/ **1** a beetle.

‖*labbis il-xunfisa tibqa sitt in-nisa [prov]* dress up a beetle and she'll become a great lady. **2** feminine of *xunfis* 2.

مخنفس *mixanfis* /adj */ long-haired, modish etc.

اتخنفس *ʔitxanfis* /vi/ to grow one's hair long and/or dress colourfully, modishly etc. - ava *mitxanfis*.

خ ن ق

خنق *xanaq (u)* /vt/ **1** to asphyxiate, suffocate. *ʔir-riiḥa l-wiḥʃa xanaqit-ha* she choked on the bad smell. **2** to strangle. - vn *xanaqaan, xanq*; ava *xaaniq*; pva *maxnuuq*.

مخنوقة *maxnuuqa* /n pl *-aat*/ motif used in tent appliqué designs (see Pl.H, 22).

خنقة *xunqa, xinqa* /n pl *-aat, xunaq*/ point between two body joints. *xunqit il-ʔiid* the point joining the hand and the arm.

خناق *xinaaq* /n/ lower part of the throat or that part of a garment next to it. *misku fi-xnaaq baʕḍ* they grabbed one another by the throat (or by the collar). ‖ *ʔinta ḥa-timsik fi-xnaaq-i* are you going to quarrel with me?

خناقة *xinaaqa* /n pl *-aat*/ quarrel, fight, row.

خنّاق *xannaaq* /n */ strangler. ‖ *ʔil-quṭṭ[i] ma-yḥibb[i]-ʃ ʔilla xannaaq-u [prov]* (the cat likes only him who treats it cruelly) ≈ people respond only to harsh treatment.

خنّاق *xunnaaq* /n/ **1** strangles, equine distemper. **2** diphtheria.

مخنق *maxnaq* /n pl *maxaaniq*/ *[carp, metal]* jig.

اتخنق *ʔitxanaq* /vi/ **1** to be asphyxiated, be suffocated. *ʔitxanaqit mil-ɣaaz fil-maṭbax* she suffocated from the gas in the kitchen. **2** to be strangled. - iva *mitxiniq*.

انخنق *ʔinxanaq* = *ʔitxanaq*. - iva *minxiniq*.

خانق *xaaniq* /vt/ to quarrel with. - vn *xinaaq*; ava *mixaaniq*.

اتخانق *ʔitxaaniq* /vi/ to quarrel, fight, brawl. *ʔitxanqu ʕaṣ-ṣabuun* they fought to get some soap. - ava *mitxaaniq*.

اختنق *ʔixtanaq* /vi/ to suffocate. - vn *ʔixtinaaq*; ava *mixtiniq*.

خ ن ن

خنّ *xunn* <perh Copt> /n pl *ʔaxnaan*/ **1** mud coop for chickens or poultry (see Pl.C, 5). - also *xumm*. **2a** square storage niche in a wall. **2b** storage space forward in a wooden boat. **3** locker. **4a** small windowless room, den. **4b** hide-out.

خ ه

خه *xah* /fem n, pl *-aat*/ seventh letter of the Arabic alphabet. - also *xaa, xaaʔ*.

خ و اج

خواجة *xawaaga* <P *khwâja*> /n pl *-aat*/ **1** European or western foreigner. **2** *[obsol]* Christian.

خواجاية *xawagaaya* /n pl *-aat, xawagaat*/ European or western woman foreigner.

خ و ت

خوت *xawat (i)* /vt/ to pester, bother. *xawat-ni ʕaʃaan ʔaxd-u maʕaaya* he pestered me to take him with me. ‖*bi-tixwit id-dimaay* ≈ you're a pain in the neck! - vn *xawta*; ava *xaawit*; pva *maxwuut*.

خوتة *xawta* /n pl *xiwat*/ commotion, row, scene. *ʔeeh il-xawta lli-nta ʕamil-ha di* why don't you shut up! *ga ʔimbaariḥ ʕamal-lina xawta kbiira ʕaʃaan il-ḥikaaya* he came yesterday and made a huge scene with us over the matter.

اتخوت *ʔitxawat* /vi/ to be pestered. - iva *mitxiwit*.

انخوت *ʔinxawat* = *ʔitxawat*. - iva *minxiwit*.

خ و ج

خوجة *xooga* <T *ḫoca*> /n pl *-aat*/ **1** *[obsol]* teacher. **2** *[naut]* purser.

خ و خ[1]

خوخ *xoox* /coll n/ peach(es). ‖ *ʔilli ma-yirḍa bil-xoox yirḍa b-faraab-u [prov]* (he who doesn't accept the peach must accept its nectar) if one doesn't accept what one is first offered, one may have to be satisfied with something less later on.

خوخة *xooxa[1]* /unit n, pl *-aat*/ a peach.

خوخاية *xoxaaya* /unit n, pl *-aat*/ a peach.

خ و خ[2]

خوخة *xooxa[2]* /n pl *xoox*/ opening in a wall or gate, wicket gate.

خوّخ *xawwax* /vi/ to rot away, perish or decay inside. *ʔil-xaʃab mixawwax* the wood is rotten below the surface. *ʔil-ʕaya xallaa xawwax wi-baqa gild[a] ʕala ʕaḍm* illness drained his strength completely and left him no more than skin and bones. ‖*muxx-u xawwax* ≈ his mind has gone to seed. - vn *taxwiix*; ava *mixawwix*.

خ و ذ see خ و ز

خ و ر[1]

خور *xoor* /n pl *ʔaxwaar, xiraan*/ land depression.

خ و ر[2]

خوّر *xawwar[i]* /vi/ **1** to become weak and sterile. *ʔil-ʔarḍ[i] xawwarit min kutr il-ʔihmaal* the soil had

cracks and holes from much neglect. **2** to be or become exhausted. - vn *taxwiir, taxwiir*; ava *mixawwar*.

خ و ر ³
خوّر *xawwar*² /vi/ **1** to make a noise. **2** to bellow (of a bull). - vn *taxwiir, taxwiir*; ava *mixawwar*.

خ و ر س
خورس *xoorus* <Gr *khoros*> /n/ *[Chr]* choir.

خ و ز
خوذة *xuuza* /n pl *xiwaz*/ helmet.

خ و ز ق see also خ ز ق
خوزق *xoozaq* or *xawzaq* /vt/ **1** *[obsol]* to impale. ‖ *ʕil-mixoozaq yiftim is-sulṭaan* (the impaled man will insult the sultan) in extremities a man can do anything. **2** to corner, put in a tight spot, play a dirty trick on. - ava/pva *mixoozaq, mixawzaq*.
اتخوزق *ʕitxoozaq* or *ʕitxawzaq* /vi/ **1** to be impaled. **2** to be cornered, be put in a tight spot, be tricked. - iva *mitxoozaq, mitxawzaq*.

خ و ش
خوّش *xawwiš* /vt/ *[carp]* to countersink (a hole, for a screw-head). - vn *taxwiiš*; ava/pva *mixawwiš*.
تخويشة *taxwiiša* /n pl *-aat*/ *[carp]* countersink.
اتخوّش *ʕitxawwiš* /vi/ *[carp]* to be countersunk (of a hole, for a screw-head). - iva *mitxawwiš*.

خ و ص
خوص *xuuṣ* /coll n/ palm leave(s), palm frond(s). ‖ *ḥadd il-xuuṣ [Chr]* Palm Sunday.
خوصة *xuuṣa* /unit n, pl *-aat, xiwaṣ*/ a (piece of) palm leaf, a (piece of) palm frond. ‖ *xuuṣit ṭarbuuš* the (rice- or other) straw lining of a tarbush. - *xiwaṣ ḥadiid* rolled steel strips, steel billets.
اتخوّص *ʕitxawwaṣ* /vi/ to pad up with sacking material or with woven palm-leaves. - ava *mitxawwaṣ*.

خ و ض
خاض *xaaḍ (u)* /vi/ **1** to wade in water or mud. **2** to tell tales, gossip. *ṭuul in-nahaar bi-txuuḍ fi-ʃiirit garit-ha* all day long she gossips about her neighbour. ‖ *bi-yxuuḍ fid-diin* he blasphemes. — /vt/ **3** to go through, undergo. *maṣr*ⁱ *xaaḍit ḥuruub mariira* Egypt went through some bitter wars. - vn *xawaḍaan*; ava *xaayiḍ*.
اتخاض *ʕitxaaḍ* /vi/ to be suffered, be gone through. - iva *mitxaaḍ*.
انخاض *ʕinxaaḍ* = *ʕitxaaḍ*. - iva *minxaaḍ*.
خوّض *xawwaḍ* = *xaaḍ*. - vn *taxwiiḍ*; ava *mixawwaḍ*.

خ و ف
خاف *xaaf (a, a)* /vi/ **1** to be afraid. *ʕil-gabaan yixaaf min xayaal-u* the coward is afraid of his own shadow. **2** to worry, be concerned. *ma-txaf-ʃ*ⁱ *ʕalayya* don't worry about me. *xayfa law iʃtaɣalit tiṣrif in-naẓar ʕan ig-gawaaz* she's afraid if she works she'll forget about marriage. *min xaaf silim [prov]* ≈ better safe than sorry. — /vt/ **3**↑ to fear, revere, stand in awe of. *bi-yxaaf rabb-i-na* he fears God. - vn *xoof*; ava *xaayif*.
خوف *xoof* /n/ fear.
خوفا *xawfan: xawfan min*↑ /conj/ for fear that, lest. *ma-zurtuu-ʃ xawfan min illi b-yitqaal* I didn't visit him for fear of what is being said.
خوّاف *xawwaaf* /adj */ fearful, timid.
خوّيف *xawwiif* = *xawwaaf*.
مخيف *muxiif* /adj/ frightening, awful.
خوّف *xawwif* /vt/ **1** to frighten. *ʕinta miʃ bi-txawwif-ni b-kalaam-ak* your words don't scare me. **2** to worry, disturb. - vn *taxwiif*; ava *mixawwif*.
اتخوّف *ʕitxawwif* /vi/ **1** to be frightened. **2** to be worried. - iva *mitxawwif*.

خ و ل ¹
خولى *xooli* /n pl *xiwala*/ overseer of farm workers.
خوّل *xawwil*↑ /vt/ to grant (power, authority etc. to s.o.). *xawwil-lu s-sulṭa* he gave him the authority. - vn *taxwiil*; ava *mixawwil*.
اتخوّل *ʕitxawwil* /vi/ to be granted (of power, authority etc.). - iva *mitxawwil*.

خ و ل ²
خول *xawal* /n pl *-aat*/ **1** *[coarse]* passive homosexual, catamite, nance. **2** *[abus]* bastard, stinker, swine. see further under خ و ل ن

خ و ل ³ see ¹ خ ا ل and ² خ ا ل: *xaal*¹, *xaalu, xaala, xaal*²

خ و ل ن see also ² خ و ل
اتخولن *ʕitxawlin* /vi/ **1** to be spineless or effeminate. **2** to dither. *baṭṭal xawlana wi-ʃtaɣal baqa* stop shilly-shallying and get down to work! - vn *xawlana*; ava *mitxawlin*.

خ و ن
خان *xaan*² *(u)* /vt/ to betray, let down. *nadab il-ḥaẓẓ illi xaan-u* he bewailed the luck that failed him. *law ẓakrit-i*

miʃ xaynaa-ni if my memory does not deceive me. ‖*tixuun-ak il-ɛifra* does our long friendship mean nothing to you? -*yixuun-ak il-ɛeeʃ wil-malḥ* does friendship mean nothing to you? -*mā-xad-ʃ*^{i} *xwaana* he was not on his guard. -vn *xiyaana, xuwaana*; ava *xaayin*.

خاين *xaayin* /n pl *xawana*/ betrayer, traitor.

خوّان *xawwaan* /adj/ untrustworthy, fickle (of affairs, the world etc.). *ʃid-dinya xawwaana* it's a treacherous world.

مخانة *maxaana* /n pl -*aat*/ secret. *ɛirift*^{i} *maxaanit il-masʃala* I learned the secret behind the matter.

اتخان *ʃitxaan* /vi/ to be betrayed. -iva *mitxaan*.

خوّن *xawwin* /vt/ to suspect or accuse of treachery. *ḥarras min ṣaḥb-ak wala txawwin-u [prov]* better to be on guard against your friend than have reason to suspect him and accuse him afterwards. -vn *taxwiin*; ava *mixawwin*.

اتخوّن *ʃitxawwin* /vi/ to be suspected or accused of treachery. -iva *mitxawwin*.

استخون *ʃistaxwin* /vt/ to consider untrustworthy. ‖*bi-yistaxwin ṣawabɛ-u* (he suspects his own fingers) he's very suspicious of others. -vn *ʃistixwaan*; ava *mistaxwin*.

[1] خ و ى see also [1] ء خ خ

خاوى *xaawa* /vt/ to be intimate with. *ʃin kibir ibn-ak xawii [prov]* if your son has grown up, treat him as a brother. ‖*mixaawi g-ginn* in league with demons. -vn *mixawiyya*; ava *mixaawi*.

اتخاوى *ʃitxaawa* /vi/ to have a close relationship with each other. *hiyya wi-bliis itxaawu* she and the devil are hand in glove. -ava *mitxaawi*.

[2] خ و ى

خوى *xiwi (a)* /vi/ to become empty. *ʃil-waaḥid baṭn-u xawyaana* I am rather hungry. -vn *xawa, xawayaan*; ava *xaawi, xawyaan*.

خ ى ب

خاب *xaab (i)* /vi/ to fail to succeed, come to nothing. *xaab ʃamal-u* his hopes came to nothing. *xaab fi-fuṣl-u* he was unsuccessful in his work. *min saaɛit ma ɛirif il-xammaara xaab xeeba ɑawiyya* from the moment he began to frequent bars he became a complete good-for-nothing. ‖*marra ṭṣiib wi-marra txiib* ≈ win a few, lose a few. -vn *xeeba, xayaaba*; ava *xaayib, xaybaan*.

خيبة *xeeba* /n/ failure. ‖*ya xeeba* you good-for-nothing! -*ya xebt-ak* what a dead loss you are! -*xeebit ʃamal rakba gamal [prov]* ≈ a failure for all to see. -*ʃik-kidb*^{i} *xeeba* lying is a sign of failure.

خايب *xaayib* /n pl *xiyyaab, xuyyaab*/ good-for-nothing.

أخيب *ʃaxyab* /el/ more/most unsuccessful or useless.

خيّبا *xayyuuban*: (1) *xayyuuban ɛala* may shame cover, as in *xayyuuban ɛala daqn-ak* may you be greatly shamed! (2) *xayyuuban ɛala-... ʃin* it would be proof of one's worthlessness if ..., as in *xayyuuban ɛalayya ʃin ma-kunt itɛallimt*^{i} *swaaqit ɛarabiyya f-gumɛa* I would be shown up as a fool if I couldn't learn to drive a car in a week!

خيّب *xayyib* /vt/ **1** to cause to fail. *ṣaḥb-u xayyib-u* his friend made him fail. ‖*ʃallaah yixayyib-ak* a mild or affectionate curse. **2** to disappoint, fail. *bi-txayyibu leeh kull*^{i} *ʃamaal-i* why do you frustrate all my hopes? — /vi/ **3** to fail, be disappointing. *waṣfa ma-txayyib-ʃ*^{i} *ʃabadan* a prescription that never fails. -vn *taxyiib*; ava *mixayyib*.

اتخيّب *ʃitxayyib* /vi/ **1** to be made to fail. **2** to be disappointed. -iva *mitxayyib*.

استخيب *ʃistaxyib* /vt/ to consider a failure. -vn *ʃistixyaab*; ava *mistaxyib*.

خ ى خ

خيخا *xiixa* /adj invar/ sissyish, spineless, weak and useless. *raagil xiixa* a weakling. *da ḥmaar xiixa ma-yiswaa-ʃ il-ɛaliiq illi bi-yakl-u* that's a rotten donkey, not worth the fodder it eats.

خايخ *xaayix* /adj */ weak, effeminate.

خيّخ *xayyix* /vi/ to become sissyish, weak or useless. -ava *mixayyix*.

اتخيّخ *ʃitxayyix* = *xayyix*. -ava *mitxayyix*.

[1] خ ى ر

خير *xeer* /n/ **1** bounty, blessing, good. *xeer rabb-i-na ktiir* God's bounty is great. *ziyaadit il-xeer xereen* ≈ you cannot have too much of a good thing. *ʃif-ʃagara l-murra xer-ha barra* it's a poor tree that drops its fruit outside ≈ charity begins at home. ‖*ḥaṣal xeer* no harm has been done. -*xeer (ʃin ʃaaʃ allaah)* all's well (I hope)? -*bi-xeer* (1) in good health, as in *ʃana b-xeer wil-ḥamdu li-llaah* I'm in good health, praise be to God! *balad-na b-xeer* our country is in good shape! (2) (also *ɛala xeer*) safely, as in *li-ḥadd*^{i} *ma tmurr il-ʃazma ɛala xeer* until the crisis is safely over. -*fiik il-xeer* (thank you,) you're a good sort. -*gayyiin wi-gayy*^{i} *xer-na maɛaana* we're coming and our bounty (i.e. food etc.) is coming with us. — *ʃil-xeer* **2** good luck, good fortune. *bi-ygiib il-xeer* it brings good luck. *wiff-u fii ʃil-xeer* his presence brings good luck. *ga l-xeer ɛala ɑuduum-u* he

brought good luck with him. *ṣabaaḥ il-xeer* good morning. *masaaʕ il-xeer* good evening. ‖*kattar xeer-ak* see *kattar*. **3** (also pl form *xayraat*) good deeds, charitable acts. *bi-yiʕmil il-xeer* he does good. ‖*dalaayil il-xayraat* see *dalaayil*.

خير *xayr* /n in constr/ *[frozen contexts]* the best of. *xayr il-ʕumuur il-wasaṭ [prov]* the middle road is the best. *xayru l-kalaam ma qalla wa-dall [prov]* ≈ brevity is the soul of wit. *xayr il-birr[a] ʕaagil-u* ≈ the sooner the better. *xayr il-ʕanaam* (the best of mankind) epithet of the Prophet Muhammad.

خيرى *xayri* /adj/ charitable. *ʕamal xayri* a charitable act. *gamʕiyya xayriyya* a charitable society.

خيرة *xiira* /n/ **1** choice. *ma-lii-ʃ xiira fil-ḥikaaya di* I have no choice in this matter. ‖*ʕala xiirit illaah* ≈ God be with you (or us etc.) (in what you (or we etc.) are about to do)! God grant success! **2** goodness. *ʕil-xiira f-ma xtaar-u llaah* God's is the best solution (when a solution to a dilemma presents itself out of the blue). *kull[i] taʕxiira w-fiiha xiira [prov]* every delay brings its share of good.

خيّر *xayyir, xiyyir* /adj */ **1** virtuous, kind. **2** charitable, benevolent.

أخير *ʕaxyar* /el/ better/best, more/ most likely to bring blessing or good fortune. *ʕil-ʕaxyar lak ʕinnak* ... the best thing for you would be to .... *ʕinta lik il-ʕaxyar* the choice is yours.

خيار *xiyaar[1]* /n/ **1** choice. *lik il-xiyaar* you have the choice. **2** /in constr/ the best, the choice. *huwwa min xiyaar in-naas* he's one of the very best.

خيّر *xayyar* /vt/ to cause to choose, offer a choice to. *ma-txayyar-nii-ʃ benkum* don't make me choose between you! *ʕaawiz tiḥayyar-u xayyar-u [prov]* if you want to confuse him make him choose. - vn *taxyiir*; ava *mixayyar*.

اتخيّر *ʕitxayyar* /vi/ **1** to choose, make a choice, decide. *kunt[a] ʕaawiz ʕabʕa muhandis bass iʒ-ʒuruuf itxayyarit-li* I wanted to become an engineer, but circumstances decided for me. *ʕitxayyart[i] been ʕinni ʕaqbal furuṭ-hum ʕaw ʕatrifid* I had to make a choice between accepting their conditions or being sacked. **2** to be chosen. ‖*ma-yitxayyar-ʃ[i] ʕannak* he's no better than you, you're every bit as good as he is. - ava/iva *mitxayyar*.

اختار *ʕixtaar* /vt/ to choose, select. *ʕixtar-li fustaan ḥilw* choose me a nice dress. *fariʕ-na xtaar il-ʕarḍ* our team chose the ground. - vn *ʕixtiyaar*; ava *mixtaar*; pva *muxtaar↑*.

اختيار *ʕixtiyaar* /n pl *-aat*/ choice. *ʕixtiyaar ḥurr* a free choice.

اختيارى *ʕixtiyaari* /adj */ optional. *ʕasʕila xtiyariyya* optional questions.

المختار *ʕil-muxtaar* /n/ the Chosen One (epithet of the Prophet Muhammad).

مختارات *muxtaraat↑* /pl n/ selections, selected passages. *muxtaraat min id-diwaan* selections from the anthology.

استخارة *ʕistixaara* /n pl *-aat*/ sortilege or casting of lots using the beads of a *sibḥa* or the Koran.

خ ى ر[2]

خيار *xiyaar[2]* /coll n/ gherkin(s). ‖*xiyaar ʃambar* see *ʃanbar[3]*.

خيارة *xiyaara* /unit n, pl *-aat*/ a gherkin. ‖*ʕid-dinya ʒayy il-xiyaara - yoom f-iid-ak wi-yoom* (or *ʕafara) fi-ʔiiʒ-ak [prov]* the world is like a gherkin - one day in your hand, one day (or ten) up your arse.

خ ى ش

خيش *xeef* /n/ sacking, sackcloth, burlap.

خيشة *xeefa* /n pl *-aat*/ piece of sackcloth or burlap (used, e.g., as a floor-cleaning cloth).

خيشى *xeefi* /adj/ made of sackcloth or burlap.

خيّش *xayyif* /vt/ to cover or wrap with sacking or burlap. - vn *taxyiif*; ava/pva *mixayyif*.

اتخيّش *ʕitxayyif* /vi/ to be covered or wrapped in sacking or burlap. - iva *mitxayyif*.

خ ى ط

خيط *xeeṭ* /coll n, pl *xuyuuṭ, xeṭaan*/ thread. ‖*xuyuuṭ il-fagr↑* the first rays of dawn. - *bil-xeeṭ wil-mixyaaṭ* precisely, accurately, as in *ḥakaa-li l-ʔiṣṣa bil-xeeṭ wil-mixyaaṭ* he told me the story in detail. - *ʔaaṭiʕ xeeṭ il-mizaan* dead drunk. - *xeeṭ il-banna* plumb-line. - *zayy[i] xeṭeen fi-ʕibra* (as inseparable) as two threads in a needle.

خياطة *xiyaaṭa* /n/ sewing, stitching.

خيّاط *xayyaaṭ* /n */ tailor (especially of the less pretentious sort).

خيّاطة *xayyaaṭa* /n pl *-aat*/ seamstress, dress-maker.

مخياط *mixyaaṭ, muxyaaṭ* /n *maxayiiṭ*/ packing-needle.

خيّط *xayyaṭ* /vt/ **1** to sew, stitch. *xayyaṭ-lu badla* he sewed him a suit of clothes. *ʕid-duktuur xayyaṭ ig-garḥ* the doctor stitched up the wound. **2** *[coarse]* to copulate with, screw. - vn *taxyiiṭ*; ava *mixayyaṭ*.

اتخيّط *ʕitxayyaṭ* /vi/ **1** to be sewn, be stitched. **2** *[coarse]* to be screwed. - iva *mitxayyaṭ*.

خ ى ف see خ و ف: *xaayif, muxiif*

¹ خ ى ل

خال *xaal*³ *(i)* /vi/ **1** to be well suited, go well. *ʕil-karafatta di txiil ɛala l-badla* this tie goes well with the suit. *ʕil-libs*ⁱ *xaayil ɛaleeha* the clothes look good on her. *huwwa xaayil ɋawi fil-badla* he looks very smart in the suit. *ʕilli ɀayyak ma-yxil-f*ⁱ *fik-kidb* one who is (sincere) like you makes a bad liar. **2** to be plausible (of a deception). *yixiil ɛaleek ik-kalaam da* are you really taken in by that? - vn *xayalaan*; ava *xaayil*.

خيل *xayal (i)* /vt/ to distract, disturb. *ʕil-bint*ⁱ *xayalit-ak ɛan il-muẓakra* the girl has distracted you from your studies. - vn *xayalaan, xayla*; ava *xaayil*; pva *maxyuul*.

خايلة *xayla* /n pl *-aat*/ disturbing interruption or distraction. ‖*bala xayla* don't bother yourself with that. - *xayla kaddaaba* a lot of fuss about nothing.

خيال *xayaal* /n pl *-aat*/ **1** shadow. *bi-txaaf min xayal-ha* she's afraid of her own shadow. ‖*xayaal il-maɋaata* scarecrow. *xayaal iḍ-ḍill* shadow play. **2** fancy, imagination. *xayaal-i saraḥ* my imagination wandered. *xayaal-u xiṣb* he has a fertile imagination.

خيالى *xayaali* /adj */ **1** imaginary, unreal. **2** fantastic, fabulous.

اتخيل *ʕitxayal* /vi/ to be distracted. - iva *mitxiyil*.

اتخيّل *ʕitxayyil, taxayyal*↑ /vt/ to imagine, fancy. *bi-yitxayyil ʕinn in-naas kull-a-ha ḥaramiyya* he imagines that everyone is a thief. *taxayyal baɋa* just imagine! can you credit it? - vn *taxayyul*; ava *mitxayyil*.

تخيّل *taxayyul*↑ /n pl *-aat*/ illusion, imagining, fancy.

خايل *xaayil* /vt/ to attract the attention of, distract. *ɋaaɛid yixayil-ha bil-miraaya* he is trying to attract her attention by (flashing) the mirror. - vn *mixayla*; ava *mixaayil*.

اتخايل *ʕitxaayil* /vi/ to put on airs, act conceitedly. - ava *mitxaayil*.

¶ *ʕitxaayil ɛala* to boast of being better than. *ʕitxayilt*ª *ɛalee b-ɛarabiyyit-i* I boasted of having a better car than his. - *ʕitxaayil bi-* to imagine seeing. *ʕana txayilt*ⁱ *biiha* I thought I saw her.

² خ ى ل

خيل *xeel* /coll n, pl *xuyuul, xiyuul*/ horse(s). ‖*ʕakbar maa fi-xeel-ak ʕirkab-u* (ride your highest horse) do your damnedest! you don't scare me!

خيّال *xayyaal* /n pl *xayyaala*/ horseman, cavalryman.

خ ى م

خيمة *xeema* /n pl *xiyam, xiyaam*/ tent.

خيمى *xiyami* /n pl *-yya*/ tent maker.

خيامي *xiyaami* /n pl *-yya*/ = *xiyami*.

خياميّة *xiyamiyya* /prop n/ district in *ʕid-darb il-ʕaḥmar* where tent-making shops are located.

خيّام *xayyaam* /n */ tent maker.

خيّم *xayyim* /vi/ to prevail. *ʕis-sukuut xayyim* silence reigned. - vn *taxyiim*; ava *mixayyim*.

خ ى ن see خ و ن : *xaayin, xiyaana*

(خ ى ى)

خىّ *xayy* /fem *xayya*/: *ya xayy* exclamation of bantering dismissal ≈ come off it! don't exaggerate!

خيّة *xayya* /n pl *-aat*/ noose, snare. ‖*gaab rigl-(u) fil-xayya* to trap (s.o. or s.th.).

د

د ا

دا، ده *da*[1] (also *dawwa, dawwat, **dawwak, dawwan,** dahú, dahuwwa, dahuwwat, **dahuwwak, dahuwwan,** dihawwa, dihawwat, dahawwak, **dihawwan***) /fem *di* (also *diyya, diyyat, diyyak, diyyan, **dihayya,** dihayyat, dihayyak, dihayyan, dahí, dahiyya, **dahiyyat,** dahiyyak, dahiyyan, dihiyya, dihiyyat, **dihiyyak,** dihiyyan*); pl *dool* (also *dooli, doola, **doolat, doolak,** doolan, dahúm, dahumma, **dahummat, dahummak,** dahumman, duhamma, **duhammat, duhammak,** duhamman*)/ **1** /demonst pron/ this, this one, that, that one. *ʔataluu ʕafaan da* they killed him for that? *da l-mudiir wi-di mraat-u* that's the director and that's his wife. *dool ʕaṣḥaab-ak* are these your friends? *ʕinta ʕaayiz da walla da* do you want this one or that one? ‖ *da w-da* all and sundry, every Tom, Dick and Harry, as in *ʕinta ʔaaʕid tidaxxal da w-da* are you letting just anyone come in? **2** /demonst adj, in apposition/ this, that. *ʕir-raagil da miin* who is this man? *fuuf il-bint*[i] *di* just look at that girl. *b-aḥibb in-naas dool* I like those people.

¶ *min da ʕalaa-da* (as a response) middling, not all that good but not all that bad, as in *ʕaḥwaal-ak ʕizzayyaha. - min da ʕalaa-da* 'How are things with you?' 'I get by.' *-... min dool* ... of the average kind, ... of the typical kind, as in *ʕis-sitt*[i] *min dool tuʔʕud tidallaʕ fi-bn-a-ha l-ɤaayit ma ybuuʒ* the average woman goes on spoiling her son until he's ruined, *marra min dool ḥa-titkifif* one of these days you'll be found out, *yoom min dool ḥa-yimʃi* one of these days he'll quit, *ʕaah min dool* ≈ don't tell me! I well know what sort they are! *- da ... da* /fem *di ... di*, pl *dool ... dool*/ exclamatory demonstrative conveying derision or admiration of the object indicated. *da ʕeeh lli-nta labs-u da* what on earth is that you're wearing? *da miin da lli ʔal-lak* who the hell told you so? *dool riggaala dool* those call themselves men? *di ʕarabiyya di* you call that a car? *da ʕeeh ig-gamaal da kull-u* how beautiful!

دا، ده *da*[2] /exclamatory particle/ but, why, really. *da l-mooḍa l-ʕayyam-di magnuuna* really, fashions these days are crazy! *da l-burtuʔaan is-sanaa-di ḥilw*[i] *ʔawi* my, the oranges are nice this year! *da-ḥna ʒabayn-ak* but we're customers of yours!

د ا ء

داء *daaʕ* /n pl *-aat*/ **1** physical or mental ailment. *daaʕ ik-kalb* rabies. *daaʕ il-fiil* elephantiasis. *ḍaaʕ il-ʕaẓama* megalomania. ‖ *daaʕ il-muluuk* gout. **2** bad habit. *ʕilli fii daaʕ ma-yisla-huu-ʃ [prov]* he who has a bad habit cannot get away from it. ‖ *daaʕ-u daʕ-hum* he's always picking on them.

د ا د[1]

دادة *daada*[1] <T *dada* from P> /n pl *-aat, dadawaat*/ nanny, children's nurse.

د ا د[2] see د د ى: *daada*[2], *ʕitdaada*

د ا ر see د و ر: *daar*

د ا س

داسة *daasa* /n pl *-aat*/ pulley, block.

د ا غ

داغ *daaɤ: gaab daaɤ(-u)* to bring about (s.o.'s) downfall, finish (s.o.) off.

د ا ك

داك *daak* (also *dukha, dukhat, dukhawwa, dukhawwat, dukhawwan*) /demonst pron; fem *diik*[1]

(also *dikha, dikhat, dikhayya, dikhayyat, dikhayyan, dikhiyya, dikhiyyat, dikhiyyan*); pl *dukhum* (also *dukhumma, dukhummat, dukhumman, dukham, dukhamma, dukhammat, dukhamman*)/ that (other), that (other) one. *diik il-leela* that night, the other night. *ʃil-fustaan da ʃaḫla min dukha* this dress is prettier than that other one. (n.b. *ʃin-nahaar* and *ʃil-yoom* are qualified irregularly by the feminine form, as in *kunt[a] ɛandu diik in-nahaar* I was at his place just the other day).

د ا ل

دال *daal* /fem n, pl *-aat*/ eighth letter of the Arabic alphabet. - also *dih*.

د ا م

دام *daam*[1] <Fr *dame*> /n pl *-aat*/ queen (in cards).

د ا ن

دانة *daana* <T *dane* from P> /n pl *-aat*/ (artillery) shell.

د ا ن ق

دانق *daaniq* <P *dânak*> /n pl *dawaaniq*/ *[obsol]* 1 unit of land measure equal to 29.172 square metres. 2 type of copper coin. *bi-yḫasib-ni bid-daaniq wis-saḫtuut* he makes me account for every last penny.

د ا ی

داية *daaya* <P *dâya*> /n pl *-aat*/ midwife without professional training or qualifications. ‖*di daaya w-maʃta [deris]* (she is both a midwife and a tirewoman) ≈ she can turn her hand to anything.

د ا ی ل

دايل *daayal* <Engl> /n pl *-aat*/ (telephone) dial.

د ء ب

دأب *daʃb* /n/ habit, natural disposition. *ʃana daʃb-i kida* that's the way I am. *min daʃb-u k-kidb* lying is a habit with him.

دؤب *duʃb* /adj invar/ sly. *mara duʃb* a cunning woman.

دؤوب *daʃuub* /adj */ industrious.

(د ب ا ر)

دوبارة *dubaara*[1] <perh T *dubara*> /n/ string, pack thread, twine. *fatlit dubaara* piece of string. *kurariyyit dubaara* ball of string. ‖*fuvl id-dubaara [obsol]* trickery. - *ɋaṣr id-dubaara* small area in central Cairo between Tahrir Square and Garden City.

دوبارة *dubaara*[2] <T *dubara* from P> /n pl *-aat*/ pair of twos (in dice).

[1] د ب ب

دبّ *dabb (i)* /vt/ 1 to bang, thump, hit. *ɋaɛadit tidibb[a] ɛal-baab lamma ṣḫiina* she went on pounding at the door till we woke up. *dabb-a-ha ɛalɋa* he gave her a thumping. ‖*ʃir-rigl[i] tdibb[i] maṭraḫ ma tḫibb [prov]* (one's foot hits the place one likes) one's feet follow one's fancy. 2 to thrust, stuff. *dabb il-filuus fi-geeb-u* he stuffed the money into his pocket. *dabb[i] ḫittit diin ʃakla ɋabl[i] ma naam* he stuffed down one hell of a meal before he went to sleep. — /vi/ 3 to make a banging, make a clattering. *ʃeeh illi bi-ydibb[i] fooɋ is-suṭuuḫ* what's making the banging noise on the roof? *ṭiliɛt adibb[i] nzilt adibb[i] laɋeet id-dibb[i] bi-yɋazɋaz libb* I went up banging, I came down banging, I found the bear cracking *libb* with his teeth (a children's rhythm chant). ‖*kull[i] min habb[i] w-dabb* every Tom, Dick and Harry. - vn *dabb, dabiib, dababaan*; ava *daabib*; pva *madbuub*.

¶ *dabb[i] fi-* to surge through, rise up within, as in *dabbit fii ʃir-rooḫ* (1) he began to stir. (2) his spirits rose.

دبّة *dabba*[1] /inst n, pl *-aat*/ a bang, a thump. ‖*dabbit in-namla* the slightest noise, the faintest sound, as in *yismaɛ dabbit in-namla* he's very sharp-eared, *kaanit id-dinya sakta tismaɛ dabbit in-namla* it was so quiet you could hear a pin drop.

دابّة *dabba*[2] /n/ dumb animal. *ʃaghal min dabba* ≈ dumber than an ox.

دبيب *dabiib* /n/ *[non-Cairene]* 1 snake. 2 /coll/ snake(s).

دبّابة *dabbaaba* /n pl *-aat*/ 1 tank, track-laying vehicle of war. *ṭaɋm[i] dabbaaba* tank crew. *wiliyya ɛamla zayy id-dabbaaba* a woman looking like a tank (i.e. a very large woman). ‖*gazma (kaɛb[i]) dabbaaba* a pair of wedge-heeled shoes. 2 *[print]* platen.

مدبّ *midabb, madabb* /masc and fem n, pl *-aat*/ 1 one who commits gaffes or blunders. 2 sucker, dupe, fall guy.

اتدبّ *ʃitdabb* or *ʃiddabb* /vi/ to be thrust, be stuffed. ‖*ɛeen titdabb[i] fiiha ruṣaaṣa* (an eye in which a bullet should be thrust) (1) a bold eye, as in *di mara yitdabb[i] f-ɛen-ha ruṣaaṣa* this is a woman with a bold look. (2) the evil eye, as in *di mara ɛaleeha ɛeen titdabb[i] fiiha ruṣaaṣa* this woman has the evil eye. - iva *mitdabb*.

اندبّ *ʃindabb* = *ʃitdabb*. - iva *mindabb*.

[2] د ب ب

دبّب *dabbib* /vt/ to make pointed, sharpen to a point.

manaxiir-u mdabbiba his nose is pointed. - vn *tadbiib*; ava/pva *midabbib*.
اتدبّب ʕitdabbib or ʕiddabbib /vi/ to be made pointed. - iva *mitdabbib*.

د ب ب [3]
دبّ *dibb, dubb↑* /n pl *dibab, dibaba↑*/ bear. ‖ *ʕid-dubb il-quṭbi* the Pole Star. - *ʕid-dubb il-ʕakbar* Ursa Major. - *ʕid-dubb[i] il-ʕaṣṣar* Ursa Minor. - *laqeet id-dibb[i] yqazqaz libb* I found the bear cracking *libb* with his teeth (part of a children's rhythm chant - see *dabb*).
دبّة *dibba, dubba↑* /n pl *-aat*/ female bear, (loosely also) any bear.

د ب ب [4]
دبّان *dibbaan* /coll n/ flies. *niff id-dibbaan* shoo off the flies! *ʁaṭṭi l-ʕakl[i] la-ŷǧiff[a] ǧalee ʕid-dibbaan* cover the food lest the flies settle on it! ‖ *bi-ytxaaniq maǧa dibbaan wiff-u* ≈ he is very short-tempered. - *ʕid-dibbaan il-ʕazraq ma-yiǧraf-luu-ʃ gurra* (the flesh flies do not know his spoor) he's disappeared without trace. - *(qaaǧid) bi-yniff id-dibbaan* he has no customers (of a trader), business is slack.
دبّانة *dibbaana* /n pl *-aat*/ **1** /unit n/ a fly. ‖ *dibbaanit ik-kalb* horse-fly. **2** (also *sinn[i] (ṇaml) id-dibbaana*) bead (on a rifle).
ذبابة *zubaaba↑* /n/ fly. ‖ *ʕiz-zubaaba ṭ-ṭayra* blind spot (in the eye). - *wazn iz-zubaaba* flyweight (in boxing etc.).

د ب ب و ر
دبّور *dabbuur* /n pl *dababiir, dababiir*/ **1** wasp. *dabbuur ʕaḥmar* hornet. *dabbuur ʕazraq* cuckoo wasp or ruby-tailed wasp. *dabbuur ʕaṣfar* paper wasp. *dabbuur il-xaʃab* carpenter bee. *dabbuur zann[a] ǧala xaraab ǧiff-u [prov]* (a wasp buzzed till its nest was destroyed) ≈ he asked for it. *dabbuur zann[a] ǧala ḥagar misann [prov]* (a wasp buzzed over a whetstone) ≈ you can't get blood out of a stone. **2** philanderer. *huwwa ʕakbar dabbuur fil-balad* he's the biggest skirt-chaser in town. **3** wooden spinning top operated with a string (as opposed to a whip - cf *naḥla*).
دبّورة *dabbuura* /n pl *dababiir, dababiir, dabburaat*/ **1** star of rank (on a uniform). *ǯaabiṭ bi-dabburteen* a first-lieutenant. *xad dabbuura* he got an extra pip. **2** scabbling hammer.

د ب ج
ديباج *dibaag↑* <P *dîbâ*> /n pl *dayabiig*/ brocade, silken cloth.
دباجة *dibaaga* <P *dîbâja*> /n pl *-aat*/ fulsome preliminary, prologue, preface (to remarks). *gayy[i] ǧamil-li dbaaga* he came to me humming and hawing. *balaaf id-dibaaga di* stop beating about the bush!
دبّج *dabbig* **1** /vt/ to compose, formulate (in good style). *dabbig-lu xuṭba* he composed an eloquent speech. **2** /vi/ to engage in fulsome preliminaries. *balaaf tadbiig* ≈ come to the point! - vn *tadbiig*; ava/pva *midabbig*.

د ب ح [1]
ذبح، ذبح *dabaḥ[1] (a)* /vt/ **1** to cut the throat of (especially an animal, to slaughter it for food). *ʕid-dabḥ if-farǧi* slaughter of animals according to Islamic law. ‖ *ma-yiqdar-ʃ[i] yidbaḥ farxa* ≈ he wouldn't harm a fly. - *da-nta tistaahil id-dabḥ[a] ǧala kida* ≈ you deserve every conceivable punishment for that! **2** to deal harshly with (in money matters). *huwwa daḅaḥ-ni fil-beeǧa di* ≈ he took me for every penny I was worth over the sale. - vn *dabḥ, dibiiḥ, dibḥiyya*; ava *daabiḥ*; pva *madbuuḥ*.
ذبح، ذبح *dabḥ* /n/ *[magic]* sacrifice. *ǧaleek dabḥ* you have to bring a sacrifice (i.e. a chicken or the like to be sacrificed at a *zaar*).
ذبحة، ذبحة *dabḥa[1]* /pl *-aat*/ instance noun of *ḍabḥ*.
ذبحة *zabḥa: zabḥa ṣadriyya [path]* angina pectoris.
ذبحيّة، ذبحيّة *dibḥiyya* /n/ *[non- Cairene]* point where a throat is cut in ritual slaughter.
ذبيح، ذبيح *dibiiḥ* /coll n/ **1** carcass(es) of slaughtered animal(s). **2** meat of animals slaughtered for consumption especially during *ǧiid il-ʕaḍḥa* and *ǧiid il-fiṭr*.
ذبيحة، ذبيحة *dibiiḥa* /unit n, pl *dabaayiḥ*/ a carcass of a slaughtered animal.
ذبيحة *zabiiḥa↑* /n pl *zabaaʕiḥ*/ *[Chr]* sacrifice (of the Eucharist).
ذبّاح *dabbaaḥ* **1** /n */ slaughterer. **2** /adj */ given to charging exorbitant prices.
مذبح، مذبح *madbaḥ* /n/ **1** slaughter-house. **2** point where a throat is cut in Islamic ritual slaughter. *laazim yitḥallil min madbaḥ-u* it must have its throat cut at the proper place in order to be acceptable in religion as food.
مذبح *mazbaḥ* /n pl *mazaabiḥ*/ *[Chr]* altar.
مذبحة، مذبحة *madbaḥa, mazbaḥa* /n pl *madaabiḥ, mazaabiḥ*/ massacre.
اتذبح ʕitdabaḥ[1] or ʕiddabaḥ[1] /vi/ to be slaughtered. - iva *mitdibiḥ*.
انذبح، انذبح ʕindabaḥ[1] = ʕitdabaḥ[1]. - iva *mindibiḥ*.
ذبّح، ذبّح *dabbaḥ* /vt/ to cut the throat of (a number of things). *dabbaḥ-hum waaḥid waaḥid* he slaughtered

them one after the other. - vn *tadbiiḥ*; ava/pva *midabbaḥ*.
اتدبّح *ʕitdabbaḥ* or *ʕiddabbaḥ* /vi/ to have the throat cut (of a number of things). - iva *mitdabbaḥ*.

د ب ح [2]
ذبح، ضبح *dabaḥ* [2], *ḍabaḥ* (a, a) /vt/ to lose (one's voice). *dabaḥt*[i] *ṣoot-i ɛaleek* I shouted myself hoarse calling you. - vn *dabḥa*, *ḍabḥa*; ava *daabiḥ*, *ḍaabiḥ*; pva *madbuuḥ*, *maḍbuuḥ*.
ذبحة، ضبحة *dabḥa* [2], *ḍabḥa* /n/ case of hoarseness.
اتذبح، اتضبح *ʕitdabaḥ* [2] or *ʕiddabaḥ* [2], *ʕitḍabaḥ* or *ʕiḍḍabaḥ* /vi/ to be lost (of the voice). - iva *mitdibiḥ*, *mitḍibiḥ*.
انذبح، انضبح *ʕindabaḥ* [2], *ʕinḍabaḥ* = *ʕitdabaḥ* [2], *ʕitḍabaḥ*. - iva *mindibiḥ*, *minḍibiḥ*.

د ب د ب [1]
دبدب *dabdib* [1] /vi/ to make a repeated banging, thudding or stamping (with the feet). *miin illi naazil yidabdib ɛas-sillim* who is that clomping down the stairs? - vn *dabdaba*; ava *midabdib*.

د ب د ب [2]
دبدب *dabdib* [2] /vt/ to sharpen to a point. - vn *dabdaba*; ava/pva *midabdib*.
دبدوبة *dabduuba* [1] /n pl *dabadiib*/ **1** sharp point. *dabduubit il-lisaan* the tip of the tongue. ‖*wiqiɛ fi-dabadib-ha* he fell madly in love with her. **2** fragment, particle, small fraction.
دبدوبيّة *dabdubiyya* /n pl *-aat*/ sharp point (e.g., of a needle).

د ب د ب [3]
دبدوب *dabduub* /n/ *[children]* bear, teddy bear.
دبدوبة *dabduuba* [2] = *dabduub*. *ʕid-dibba d-dabduuba* ≈Mr Bear (in children's stories).

د ب ر [1]
دابر *daabir* /n pl *dabaayir*/ trace. *ʕitqaṭaɛ dabir-hum mil-balad* they were entirely removed from the country.
دبّر *dabbar* /vt/ to think out a plan for, arrange. *dabbaruu-lu muʕamra* they set up a conspiracy against him. *laazim tidabbar ʕumur-ha dilwaqti* she must put her affairs in order right now. *lamma tfuut ɛalayya waqt*[i] *taani ʕakuun dabbart*[i] *nafs-i w-mustaɛidd*[i] *l-kull*[a] *ḥaaga* when you call another time, I'll have put myself in order and be ready for anything. ‖*rabb-i-na ydabbar* may Our Lord provide a solution! - *mudabbir il-ḥaal* Settler of Affairs (epithet of God). - *ʕil-ɛabd*[i] *fit-tafkiir wir-rabb*[i] *fit-tadbiir* man proposes, God disposes. - *tadbiir manzili* domestic science, home economics. - vn *tadbiir*; ava *midabbar*, *mudabbir*↑; pva *midabbar*, *mudabbar*↑.
تدبير *tadbiir* /n pl *tadabiir*, *tadbiraat*/ arrangement. ‖*dabbar-ni ya waziir*. - *ʕit-tadbiir li-llaah ya malik* 'Tell me what to do, O Vizier!' 'Guidance is for God to give, O King!' (a formula commonly met with in stories).
مدبّر *mudabbir* /adj/ thrifty, provident. *sitt*[i] *beet mudabbira* a thrifty housewife.
اتدبّر *ʕitdabbar* or *ʕiddabbar* /vi/ to be arranged, be settled. *wala yhimm-ak - titdabbar* don't worry, it'll turn out O.K. - iva *mitdabbar*.

د ب ر [2]
دبر *dubur* /n pl *ʕidbaar*, *ʕadbaar*↑/ back, rear, buttocks, anus. *wallu l-ʕadbaar* they turned their backs and ran away.

د ب ر [3] see د ب ا ر: *dubaara*

د ب ر [4] see د ب ب و ر: *dabbuur*, *dabbuura*

د ب ر ي –
دبرياج *dibriyaaj* <Fr *débrayage*> /n pl *-aat*/ *[auto]* clutch. *ʕid-dibriyaaj bi-yfawwit* the clutch is slipping.

د ب س [1]
دبّوس *dabbuus* /n pl *dababiis*/ **1** pin. *dabbuus ʕibra* straight pin. *dabbuus rasm* drawing-pin, thumb-tack. *dabbuus maʃbak* or *dabbuus ingliizi* safety-pin. *dabbuus faransaawi* brad (for paper). *dabbuus faɛr* hairpin. *dabbuus dabbaasa* staple. *dabbuus saqya* vertical axle of a water wheel (see Pl.E, 4). ‖*xad dabbuus* he had a dirty trick played on him. **2** clip, brooch. *dabbuus ʕalmaaz* diamond clip. *dabbuus karafatta* tie-pin, tie clip. **3** drumstick (of a cooked bird).
دبّوسة *dabbuusa* /n/ **1** point of a shoulder or hip. **2** drumstick (of a cooked bird).
دبّاسة *dabbaasa* /n pl *-aat*/ stapler.
دبّس *dabbis* /vt/ **1** to pin. *ḥuṭṭ-i-lu l-fuuṭa w-dabbis-ha* put a towel on him and pin it on. ‖*dabbis-li tuhma* he pinned a charge on me. **2** to staple. **3** to draw (s.o.) into a liability. *dabbis-ni f-ɛaʃara gneeh* he wormed ten pounds out of me. - vn *tadbiis*; ava/pva *midabbis*.
تدبيسة *tadbiisa* /pl *-aat*/ instance noun of *tadbiis*.
اتدبّس *ʕitdabbis* or *ʕiddabbis* /vi/ **1** to be pinned. **2** to be stapled. **3** to be landed with a liability. *ʕitdabbist*[i] *ḥittit diin tadbiisa* I was really put on the spot.

ʕil-muwaẓẓafiin xaragu w-ʕana lli tdabbist^{i} fiʃ-ʃuɣl the employees left and I was the one who got landed with the work. - iva *mitdabbis*.

د ب س [2]
دبس *dibs* <Engl *dip stick*> /n/ rod for measuring petroleum in a storage tank.

د ب ش [1]
دبش *dabʃ* <Copt> /n/ rough-cut limestone. *dabʃ^{i} mrawwim* quarry stone cut to standard sizes. ‖ *kalaam zayy id-dabʃ* crude and insensitive talk.
دبشة *dabʃa* /n/ **1** /unit n, pl *-aat*/ a piece of rough-cut limestone. **2** /no pl/ a type of mango.
دبشاية *dabʃaaya* = *dabʃa* 1.
دبّاش *dabbaaʃ* /n * and pl *dabbaaʃa*/ one who talks crudely and insensitively.
دبّش *dabbiʃ* **1** /vt/ to cover with a layer of *dabʃ* (in road building etc.). *bi-ydabbiʃu ṭ-ṭariiq wi-baʕdeen yisaflituu* they put a layer of *dabʃ*, and then a layer of asphalt, on the road. **2** /vi/ to indulge in crude and insensitive talk. *dayman yidabbiʃ fik-kalaam* he's always rude and insolent. - vn *tadbiiʃ*; ava/pva *midabbiʃ*.

د ب ش [2]
دبش *dabaʃ* <T *dübeş*> /n pl *-aat, dibíʃa, dubúʃa*/ pair of fives (in backgammon).

د ب ش ك
دبشك *dibʃik* <T *dipçik*> /n pl *dabaaʃik*/ rifle butt.

د ب غ
دبغ *dabaɣ (u)* /vt/ **1** to tan (leather). **2** to tan (the skin, of the sun). — /vi/ **3** to eat gluttonously. *bi-yudbuɣ dabɣ^{i} wi-yquul ma-kalt^{i}-ʃ* he eats enormously and says 'I haven't eaten'. - vn *dabɣ, dibaaɣ, dibaaɣa, dabaɣaan*; ava *daabiɣ*; pva *madbuuɣ*.
دباغ *dibaaɣ* **1** /n/ tanning solution. **2** /coll n/ tanned goods.
دبغة *dabɣa* /n pl *-aat*/ **1** tanning solution. **2** /inst n/ a tan.
دبّاغ *dabbaaɣ* /n */ **1** tanner. **2** glutton.
مدبغة *madbaɣa* /n pl *madaabiɣ*/ tannery.
مدابغي *madabɣi* /n pl *-yya*/ tanner.
اتدبغ *ʔitdabaɣ* or *ʔiddabaɣ* /vi/ **1** to be tanned (of leather). **2** to be tanned (of the skin, by the sun). - iva *mitdibiɣ*.
اندبغ *ʔindabaɣ* = *ʔitdabaɣ*. - iva *mindibiɣ*.

د ب ق
دبق *dabaq (u, a)* /vt/ to trail, shadow, stick closely to. *ʔil-ʕaskari tann-u dabiq-ni l-ɣaayit il-beet* the policeman shadowed me all the way to the house. - vn *dabaqaan*; ava *daabiq*.
¶ *dabaq fi-* to lay hold of. *dabaq fi-raqabt-i* he seized me by the neck.
اتدبق *ʔitdabaq* or *ʔiddabaq* /vt/ **1** to trail, shadow, stick closely to. **2** to pick on, single out for unfavourable treatment. *ʔinta dayman mitdibiq il-ʕayyil kida leeh* why are you always picking on the kid like that? - ava *mitdibiq*.
اندبق *ʔindabaq* = *ʔitdabaq*. - ava *mindibiq*.
دبّق *dabbaq* /vt/ to save up. *ḥ-aḥaawil ʔadabbaq-lak il-mablaɣ* I'll try and get together the money for you. ‖ *dabbaqi ya xayba lil-ɣayba [prov]* ≈ why bother, foolish woman, to scrimp and save when your husband will take all the money to spend on some other woman? i.e. don't put yourself to trouble when the benefit will go to a rival. - vn *tadbiiq*; ava/pva *midabbaq*.
تدبيقة *tadbiiqa* /n/ savings. *qayyaʕ ʕaleeha tadbiiqit il-ʕumr* he spent his life-savings on her.
اتدبّق *ʔitdabbaq* or *ʔiddabbaq* /vi/ **1** to be saved up (of money). **2** to get hold, gain possession (especially of money). *ʔiddabbaq-lu ʕala qirfeen sulfa* he managed to get together a bit of money by borrowing. - ava/iva/pva *middabbaq*.

د ب ك
دبكة *dabaka* /n/ fuss, commotion.

د ب ل [1]
دبلة *dibla* /n pl *dibal, diblaat*/ **1** ring or band of one width (in contrast with *xaatim* (q.v.) in the case of a ring for the finger). *ḥalaq dibla* plain earrings passing through the lobe of the ear. *dibal lis-sataayir* curtain rings. **2** loop (intra-uterine device). **3** /also pl *dubal*/ anus. ‖ *ʔabu d-dubal* pederast.

د ب ل [2]
دوبل *dubl* <Fr *double*> /adj invar/ **1** double, double-size. *qahwa dubl* a double-size cup of coffee. **2** par excellence, to a high degree. *ʔakla dubl* a real meal. *ʕalqa dubl* a good hiding. *raagil dubl* a fine man. — /n pl *-aat*/ **3** *[auto]* pair of double wheels. *ʔid-dubl il-quddamaani* the front pair of double wheels.

د ب ل [3]
دبل، ذبل *dibil (a)* /vi/ to wilt. *ʔin diblit il-warda riḥit-ha fiiha [prov]* (even if the rose wilts, it has its scent) good

breeding shows in any circumstances. - vn *dubuul, dibuul, dabalaan*; ava *dablaan*.
دبّل، ذبّل *dabbil* /vt/ to cause to wilt or wither. *ʔil-ɛaṭaf dabbil iz-zarɛ* drought caused the plants to wither. - vn *tadbiil*; ava/pva *midabbil*.
استذبل، استذبل *ʔistadbil* /vt/ **1** to consider wilted or withered. *ʔistadbilit il-faṣulya wi-ʃtarit badalha baṭaaṭis* she thought that the beans were too withered so she bought potatoes instead. **2** to select for wiltedness or witheredness. *ʔil-fakahaani l-xabiis baɛa yistadbil wi-ydiss' f-kiis il-mooz* the deceitful fruit-seller went on choosing the withered bananas and slipping them into the bag. - ava *mistadbil*.

د ب ل ا ق
دبلاق *diblaaq* /coll n/ palm-fibre rope(s) (used in particular for securing scaffolding boards).

د ب ل ا ن
دبلان *dabalaan* /n/ plain white calico.

د ب ل ج
دوبلاج *dublaaj* <Fr *doublage*> /n/ *[cin]* dubbing.
دبلج *dablij, dablig* /vt/ *[cin]* to dub. - vn *dablaja, dablaga*; ava/pva *midablij, midablig*.
اتدبلج *ʔitdablij, ʔitdablig* or *ʔiddablij, ʔiddablig* /vi/ *[cin]* to be dubbed. - iva *mitdablij, mitdablig*.

د ب ل ر
دبلر *dablar'* /n/ *[acad]* one who repeats a year (in school or college).
دوبلير *dubleer* <Fr *doublure*> /n/ *[cin]* stand-in.
دبلر *dablar²* /vi/ **1** *[cin]* to stand in. **2** *[acad]* to repeat a year (in school or university). - vn *dablara*; ava *midablar*.

د ب ل ق see د ب ل ا ق: *diblaaq*

د ب ل م –
دبلوماسي *diblumaasi* /adj */ **1** diplomatic. *ʔis-silk id-diblumaasi* the diplomatic corps. *ʔil-ħaqiiba d-diblumasiyya* the diplomatic bag. **2** tactful. – /n */ **3** diplomat.
دبلوماسيّة *diblumasiyya* <prob Fr *diplomatie*> /n/ diplomacy. *fi-muntaha d-diblumasiyya* extremely tactful(ly).

د ب ل ن see د ب ل ا ن: *dabalaan*

د ب ل و م
دبلوم *dibloom, dubloom, dabloom* (also *dabloon↓*) <Fr *diplôme*> /n pl *-aat*/ diploma. *dibloom ɛaali* graduate or postgraduate diploma. *dibloom mutawassiṭ* diploma below the standard of a university degree.
دبلوما *diblooma* = *dibloom*.

د ب ل و ن see د ب ل و م: *dabloon↓*

د ب ل ي ر see د ب ل ر: *dubleer*

د ب ي
دوبيا، دوبيه *dubya* <It *doppio*>: *[obsol] ħisaab id-dubya* double-entry bookkeeping. *kaatib dubya* a double-entry bookkeeper.

د ب ي ا س
دوبياس *dubyaas* <Fr *deux pièces*> /adj invar/ two-piece. *fustaan dubyaas* two-piece outfit.

د ت و ر
داتورة *datuura* /coll n/ *[bot]* datura. - also *dahtuura, tatuura, ṭaṭuura*.

د ج ج
دجّج *daggig↑* /vt/ to arm fully. *daggig nafs-u bis-silaaħ* he armed himself to the teeth. - vn *tadgiig*; ava/pva *midaggig*; pva *mudaggag↑*.
اتدجّج *ʔitdaggig* or *ʔiddaggig* /vi/ to be fully armed. - iva *mitdaggig*.

د ج د ج
دجدج *dagdig* /vi/ to bump, be bumpy (of roads, cars etc.): *ʔil-ɛarabiyya miʃyit tidagdig fiṭ-ṭariiq* the car bumped down the road. - vn *dagdaga*; ava *midagdig*.

د ج ل [1]
دجل *dagal* /n/ confidence trickery, charlatanism, deception, hocus-pocus.
دجّال *daggaal* /n */ confidence trickster, charlatan. || *ʔil-masiix* (or *ʔil-masiiħ*) *id-daggaal* (or *ig-gaddaal*) the Anti-Christ.
دجّل *daggil* /vi/ to engage in swindling. *ma-nafaɛ-ʃ' fil-bandar raaħ il-ʔaryaaf yidaggil ɛal-fallaħiin* he couldn't make out in town so he went to the country to cheat the peasants. - vn *tadgiil*; ava *midaggil*.
مدجّلاتي *midaggalaati* /n pl *-yya*/ = *daggaal*.

د ج ل [2]
دجلة *digla* /prop n/ **1** area immediately to the east of el-Ma'adi. **2** the River Tigris.

د ج ن
داجن *daagin* /adj/ tame, domesticated. *ɦayawaan daagin* a domesticated animal.
دواجن *dawaagin* /pl n/ poultry. *ɦaẓiirit dawaagin* poultry run.

د ج و
دجى *duga: duga l-leel* the dark (of night).

د ح ح [1]
دحّ *daɦɦ [1] (i)* **1** /vi/ to toil. *ʔanbaɦ fi=ṣoot-i w-ʔadiɦɦ [i] w-ʔaṭfaɦ id-damm* I strain my voice, and slave, and sweat blood. *ɛammaal yidiɦɦ [i] fil-ʔakl* he is hard at it, wolfing down the food. **2** /vt/ to inflict (an action) with intensity on (s.o.). *daɦɦ-i-ni ɛalqa* he gave me a terrific beating. *nazla tdiɦɦ [i] ʃtiima f-garit-ha* she goes on and on hurling insults at her neighbour. - vn *daɦɦ, daɦaɦaan*; ava *daaɦiɦ*.
دحّاح *daɦɦaaɦ* /adj * and pl *daɦɦaaɦa*/ slogging, toiling, hard-working but unintelligent.

د ح ح [2]
دحّ *daɦɦ [2]* /adj invar/ *[children]* good. ‖ *ʔis-saɦɦ id-daɦɦ (ya) xaruuf naṭṭaaɦ* child's chant for urging a ram to butt.
دحّة *daɦɦa* /adj invar/ *[children]* good, nice.

د ح ح [3]
دحّ *daɦɦ [3]* /coll n/ *[non-Cairene]* egg(s). *ʔilli ɛaayiz id-daɦɦ [i] ma-yquul-ʃ [i] ʔaɦɦ [prov]* he who wants (hot, boiled) eggs should not say 'Ouch!'. see further under د ح ى

د ح د ح
دحدح *daɦdaɦ* /vt/ to budge, ease (s.o. or s.th.) away. - vn *daɦdaɦa*; ava/pva *midaɦdaɦ*.
اتدحدح *ʔitdaɦdaɦ* or *ʔiddaɦdaɦ* /vi/ **1** to go a little away, move oneself aside. *ɦa-niddaɦdaɦ biɛiid ɛan il-ɦitta w-nirkab min ɛand in-naṣya* we'll move along from here a bit, and get on (the bus) at the corner. **2** to be budged, be eased away. - vn *daɦdaɦa*; ava/iva *mitdaɦdaɦ*.

د ح د ر
دحدر *daɦdar* /vt/ **1** to cause to roll down. *ɦ-adaɦdar-ak ʔagiib-ak il-ʔarḍ* I'll knock you sprawling to the ground! **2** to cause to decline. *ʔil-xamra daɦdarit ṣiɦɦit-u* drink sapped his health. - vn *daɦdara*; ava/pva *midaɦdar*.
دحديرة *duɦdeera, duɦdeera* /n pl *daɦadiir, duɦderaat*/ (downward) slope. *min nuqra l-duɦdeera [prov]* (out of the cranny on to the downward slope) ≈ out of the frying-pan into the fire.
دحدورة *daɦduura, daɦduura = duɦdeera*.
اتدحدر *ʔitdaɦdar* or *ʔiddaɦdar* /vi/ **1** to roll down. *raqabt-u ddaɦdarit min ɛal-mixadda* his head slipped off the pillow. **2** to go into decline. *ʔaɦwaal-u middaɦdara* his circumstances have deteriorated. - ava *mitdaɦdar*.

د ح ر ج
دحرج *daɦrag* **1** /vt/ to roll, cause to roll. *daɦragit il-baramiil* barrel rolling. *daɦrag filuus-ak* roll your pennies! **2** *[naut]* to parbuckle, raise or lower using a parbuckle. - vn *daɦraga*; ava/pva *midaɦrag*.
اتدحرج *ʔitdaɦrag* or *ʔiddaɦrag* /vi/ to roll. - ava *mitdaɦrag*.

د ح ر ى ج
دحريج *duɦreeg* /n/ common vetch (the seeds of which frequently occur as an impurity in grain). *yaxdu l-qamḥ [i] ynaqqu minnu ṭ-ṭiin wid-duɦreeg* they take the wheat and pick the dirt and vetch seeds out of it.
دحريجة *duɦreega* /unit n, pl -aat/ a vetch seed.

د ح س see also د و ح س
دحس *daɦas (a)* /vt/ to shove, thrust, press (s.th. into s.th.). *daɦast [i] ʔiid-i guwwa g-guɦr [a] ɛafaan aqfif il-ʔarnab* I pushed my hand into the hole to catch the rabbit. - vn *daɦs, daɦasaan*; ava *daaɦis*; pva *madɦuus*.
اتدحس *ʔitdaɦas* or *ʔiddaɦas* /vi/ to be shoved, thrust or pressed (into s.th.). - iva *mitdiɦis*.
اندحس *ʔindaɦas = ʔitdaɦas*. - iva *mindiɦis*.
داحس *daaɦis* /vi/ to push one's way, exert oneself. *daɦist [i] w-ʔana ṭaaliɛ il-ʔutubiis li-ɦadd [i] ma laqeet maṭraḥ* I forced my way into the bus until I found a place. - vn *midaɦsa*; ava *midaaɦis*.

د ح ك
دحك، ضحك *diɦik (a)* /vi/ **1** to laugh, smile. *ɦa-nfuuf miin fiina lli ɦa-yidɦak fil-ʔaaxir* we'll see which of us will laugh last! *ʔidɦak qabl id-diɦk [i] ma yixla* laugh before laughing becomes too expensive, laugh while you can. *ʔilli yidɦak in-nahar-da yɛayyaṭ bukra [prov]* he who laughs today will weep tomorrow. **2a** to jest.

da-ɦna b-nidɦak ya-xt-i maɛaaki we're just teasing you, dearie! **2b** to mock, laugh. *ma tibqa laṭiif wi-ma-tidɦak-fⁱ ɛalayya* why don't you be nice and stop making fun of me?! - vn *diɦk*; ava ***daaɦik***; pva *madɦuuk*.

¶ *diɦik ɛala* to fool, cheat. *diɦik ɛala ɛaql-u-hum bi-kilmiteen* he deceived them with a few words. *ʕid-diɦkᵃ ɛad-duquun* making fools of people. *ʕid-diɦkᵃ ɛal-ɛiwala fayda [prov]* fooling fools is legitimate (because they ask for it). *kaan madɦuuk ɛaleena* we were cheated.

ضحكة، دحكة *diɦka* /inst n, pl *-aat*/ laugh, a smile. ‖*xallaa-ni diɦka been in-naas* he made me a laughing-stock.

ضحّيكة، دحّيكة *duɦɦeeka, duɦɦeeka* /n/ object of laughter or ridicule. *ɦaasib ʕana miʃ id-duɦɦeeka btaɛt-ak* just watch it! I'm not here for you to make fun of.

مضحكة *madɦaka, maḍɦaka* /n/ **1** place of laughter. *ʕiɦna f-maktab - ɦa-tiqlibuu madɦaka* we're in an office; are you going to turn it into a joke shop! **2a** comic situation, farce. *ɦa-tiqlibu l-igtimaaɛ madɦaka* do you want to turn the meeting into a comedy act? **2b** object of laughter. *xallat-ni madɦakit-ha* she made me the butt of all her jokes.

اتضحك، اتدحك *ʕitdaɦak* or *ʕiddaɦak, ʕitḍaɦak* or *ʕiḍḍaɦak: ʕitdaɦak ɛalee (ɛaleeha* etc.) he (she etc.) was fooled, was cheated. *ʕana miʃ min illi b-yiddiɦik ɛaleehum* I'm not the type to be fooled. - iva ***mitdiɦik***.

انضحك، اندحك *ʕindaɦak* = *ʕitdaɦak*. - iva ***mindiɦik***.

ضحّك، دحّك *daɦɦak, ḍaɦɦak* /vt/ to make (s.o.) laugh. *kalaam yidaɦɦak* laughable talk. ‖ *ʕallaah yidaɦɦak-ak* ≈ you make me laugh! - vn *tadɦiik, taḍɦiik*; ava/pva *midaɦɦak, miḍaɦɦak*.

اتضحّك، اتدحّك *ʕitdaɦɦak* or *ʕiddaɦɦak, ʕitḍaɦɦak* or *ʕiḍḍaɦɦak* /vi/ **1** to be made to laugh. **2** to act coquettishly. *yaama ʕiddaɦɦakit maɛa da w-da w-hiyya ṣɣayyara* how many men she flirted with when she was young! - ava/iva *mitdaɦɦak, mitḍaɦɦak*.

¶ *ʕitdaɦɦak ɛala* to poke fun at. *ɛaɛadu yitdaɦɦaku ɛaleeha f-ɣiyab-ha* they poked fun at her in her absence.

د ح ل

داحل *daaɦil* /vi/ to make an effort, strain one's wits. *muʃkila tann-u ydaaɦil lamma ɦall-a-ha* a problem which he kept struggling with until he solved it. - vn *midaɦla*; ava *midaaɦil*.

اتداحل *ʕitdaaɦil* or *ʕiddaaɦil* = *daaɦil*.

د ح ل ب

دحلب *daɦlib, daɦlab* /vt/ to sneak, insinuate. ***daɦlib ʕiid-u f-geeb-u*** he slipped his hand in his pocket. - vn *daɦlaba*; ava/pva *midaɦlib*.

دحلاب *diɦlaab* /adj pl *daɦaliib*/ blandiloquent, smooth-tongued, unctuous, sly.

اتدحلب *ʕitdaɦlib* or *ʕiddaɦlib* /vi/ to sneak in. *yiddaɦlib zayy it-taɛlab* he moves in stealthily like a fox. *ʕin-naas iddaɦlibu quddaami fiṭ-ṭabuur* people slipped in before me in the queue. - ava *mitdaɦlib*.

¶ *ʕitdaɦlib ɛala* to make up to (s.o.). *qaaɛid yiddaɦlib ɛaleeha lamma baɛit-lu l-beet* he kept on making up to her until she sold him the house.

د ح ى

see also ³ د ح ح

دحى *daɦɦi, daɦy* = *daɦɦ*³.

دحية *daɦya* /unit n, pl *-aat*/ an egg.

دحّى *daɦɦa* /vi/ to lay eggs. *ɛandina farxa bi-tdaɦɦi yomaati* we have a hen that lays every day. - vn *daɦy*; ava *midaɦɦi*.

د خ خ ن ى

see ¹ د خ ن : *daxaxni*

د خ ر

ذخرة *zaxra* = *zaxiira*.

دخير *dixiir* /n/ gunpowder.

ذخيرة *zaxiira* /n pl *zaxaayir*/ **1** ammunition. *zaxiira ɦayya* live ammunition. **2**↑ treasured thing.

ادّخر *ʕiddaxar* /vt/ to save, conserve. *law tiddixir maɛaahum taaxud nisba ʕaɛla* if you save with them you'll get a higher rate. *ʕiddixir nafaaṭ-ak lil-mubaraah* save your energy for the match! - vn *ʕiddixaar*; ava *middixir*; pva *muddaxar*↑.

ادّخار *ʕiddixaar* /n pl *-aat*/ **1** savings. *daftar iddixaar* savings book. **2** superannuation.

ادّخارى *ʕiddixaari* /adj/ pertaining to saving.

مدّخرات *muddaxaraat* /pl n/ savings.

د خ ش ب

دخشاب *duxʃaab* /n pl *daxaʃiib*/ wooden implement used by a pickle maker to agitate the vegetables in the brine.

دخشب *daxʃib* /vt/ to treat (vegetables) by using a *duxʃaab*. - vn *daxʃaba*; ava/pva *midaxʃib*.

اتدخشب *ʕitdaxʃib* or *ʕiddaxʃib* /vi/ to be treated with a *duxʃaab*. - iva *mitdaxʃib*.

د خ ل

دخل *daxal (u)* **1** /vt and vi/ to go in(to), enter. *daxalit (fi-)maɦall* she went into a shop. *ʕiɦna daxalna (fi-)ɦarbeen qablⁱ kida* we've entered two wars before

this. *daxalt[a] ɛaleehum il-ʕooḍa* I went into the room where they were. *ʕudxuli min ɛatabit il-baab* come in from the doorway! *ʕin-nuur bi-yudxul taḥt il-ʁaṭa* the light comes in under the lid. *mamnuuɛ id-duxuul* no entry. *ʕif-ʃita daaxil* winter is approaching. ‖ *daxal imtiḥaan* to sit for an exam. - *daxal maʒaag-u* to take one's fancy, as in *ʕil-bitt[i] daxalit maʒaag-i w-miʃ ḥ-aaxud ʁer-ha* the girl has taken my fancy and I'll marry no other. - *ma-daxal-ʃ[i] dinya* he's had no experience with a woman. - *ʕid-daxla wil-xarga* the ins and outs, the details. - *ḥaaga miʃ daxla dmaaʁ-i* (or *muxx-i*, or *ɛaʕl-i*) (1) something I can't figure out. (2) something I can't accept. **2** /vi/ to consummate a marriage, begin cohabitation. *baɛd[i] mudda niktib ik-kitaab wi-ngaḥḥiz wi-nudxul* after a while we write the contract, buy the *gihaaz* (q.v., sense 5) and consummate the marriage. - vn *daxla, duxuul*; ava *daaxil*.

¶ *daxal fi-* (1) to be a matter for, be the responsibility of, as in *da ʃeeʕ yudxul fi-ʕiraadit illaah* that is in God's hands. (2) to enter into, embark upon, as in *daxal maɛaahum fi-siin wi-giim* he set about questioning them. (3) to collide with, crash into, clash with, as in *ʕil-ɛarabiyya daxalit fil-ḥeeṭa* the car crashed into the wall, *w-ana b-akkallim fit-tilifoon waaḥid daxal fil-xaṭṭ* while I was speaking on the phone someone else came on the line (as a result of crossed lines). (4) to attack, set about, fall upon, as in *daxal fil-ʕakl[i] b-ʕidee w-riglee* he gobbled up the food, *daxal fiina ʃmaal* he rode roughshod over us. - *daxal ɛala* to deceive, as in *kalaam-u daxal ɛalayya* I was taken in by his words. - *daxal been* to intervene between, as in *ya daaxil been il-baṣala w-ʔiʃrit-ha ma-ynuub-ak ʕilla ṣannit-ha [prov]* (you who push yourself in between the onion and its skin will only get the smell) if you interfere in other people's business you'll be sorry.

دخلة *daxla* /n/ entrance. *beet daxlit-u ʃarʔiyya* a house whose entrance faces east.

داخل *daaxil[1]* **1** /n/ inside. *fi-daxl-u* inside it. *maʔli min id-daaxil bi-loon ʕabyaḍ* painted white on the inside. **2** /prep/ inside. *dawaayir daaxil baɛḍ-a-ha* concentric circles.

الداخلة *ʕid-daxla* /prop n/ the Oasis of Dakhla, the most populous of the oases of the Western Desert.

داخلي *daxli, daaxili* /adj/ internal. *huduum daxliyya* underclothes. *siyaasa daxliyya* internal policy. *naziif daxli* internal haemorrhage. *ʕiṯṯilaaɛ daxli* reading (but not borrowing) rights (at a library). *ʕiḥtiraaq daaxili* internal combustion. *ɛiyaada daxliyya* in-patient clinic. ‖ *madrasa daxliyya* boarding school.

داخليّة *daxliyya, daaxiliyya↑* /n/ **1** internal affairs. *wizaarit id-daxliyya* the Ministry of the Interior. **2** *ʕid-daxliyya [joc]* the wife.

داخليّات *daxliyyaat* /pl n/ private affairs, confidential matters. *xalla kull[i] ʕasraar-u w-daxliyyaat-u maɛaaya* he confided in me all his secrets and private affairs.

دخل *daxl* /n/ **1** legitimate concern, involvement. *daxl-u ʕeeh fi-da* what business of his is that? *ma-lii-ʃ daxl[i] b-ʕasaami* names are no concern of mine. **2** /pl *duxuul*/ income, revenue. *ḍariibit id-daxl* income tax.

دخلة *duxla* /n/ consummation of marriage, beginning of cohabitation (of a married couple). *leelit id-duxla* wedding-night.

دخيل *daxiil* **1** /adj/ intrusive. *ʕik-kamangaat di daxiila ɛaleena* these violins have come to us from outside. *kilma daxiila* loan word. ‖ *ʕil-ɛammi wid-daxiil* colloquial language and loan words. **2** /n pl *duxala*/ intruder, outsider. *ʕid-duxala ma-yitkallimuu-ʃ* those who have nothing to do with us should keep silent!

دخيلة *daxiila* /n pl *daxaayil*/ intrinsic nature.

مدخل *madxal* /n pl *madaaxil*/ **1** approach, entrance, entrance hall. **2** introduction. *ʕik-kalaam luu madaaxil* there are (proper) ways to broach a subject. **3** *[elec]* induction coil.

دخّل *daxxal* /vt/ to cause to enter. *daxxal if-fooka fi-ṣbaaɛ-u* he got the thorn stuck in his finger. *bi-ydaxxal il-markib il-miina* he takes the boat into harbour. *ʕil-maḥbas bi-ydaxxal il-mayya ɛala s-sifoon* the stop cock admits the water to the cistern. ‖ *ʕeeʃ daxxal-ni* what's it got to do with me? - vn *tadxiil*; ava *midaxxal*.

اتدخّل *ʕitdaxxal* or *ʕiddaxxal* /vi/ to interfere, intervene. *miʃ mafruuḍ yiddaxxalu f-kull[a] ḥaaga* they are not supposed to interfere in everything. - vn *tadaxxul*; ava *mitdaxxal*.

¶ *ʕitdaxxal been* to mediate between. *ʕitdaxxal benhum wi-nhi l-mawḍuuɛ* mediate between them and put an end to the matter!

داخل *daaxil[2]* /vt/ to interwine. - vn *midaxla*; ava *midaaxil*.

اتداخل *ʕitdaaxil* or *ʕiddaaxil* /vi/ **1** to interfere. *ʕilli yiddaaxil been in-naas yaama yindaas [prov]* you get nothing but put-downs from interfering with people. **2** to be or become intermixed, intermingled, or intertwined. *ʕalwaan mitdaxla* mixed colours. ‖ *xuṭuuṭ mitdaxla* crossed (telephone) lines. - vn *tadaaxul↑*; ava/iva *mitdaaxil*.

أدخل *ʕadxal↑ (i)* = *daxxal*. - commonly used in unelevated speech in the phrases *ʕeef ʕadxal-ak fil-mawḍuuɛ* what has brought you into the matter? *ʕadxal taḥsinaat* (or *taɛdilaat*) to make improvements (or modifica-

tions), as in *ḥa-nidxil taḥsinaat ɛal-maḥall* we're going to make improvements to the shop. - vn *ʔidxaal*ʔ; ava *mudxil*.

د خ م س
دخمس *daxmis* **1** /vt/ to dim. *daxmis il-lamba* turn the lamp down low! **2** /vi/ to become dim. *ʔil-lamba daxmisit* the lamp burnt low. *ʔil-leel daxmis* the night thickened. ‖*dimaaɣ-i daxmisit* I felt at a low ebb. - vn *daxmasa*; ava *midaxmis*.
¶ *daxmis li- [coarse]* to copulate with, lay (a woman). - *daxmis ɛala* to hoodwink. ‖*ḥa-tdaxmis ɛala baaba* ≈ who are you trying to fool?
اتدخمس *ʔitdaxmis* or *ʔiddaxmis* /vi/ to be dimmed or become dim. - ava/iva *mitdaxmis*.

د خ ن [1]
دخنة *daxana* /n/ smoke, haze, fumes.
دخّان *duxxaan* /n/ **1** smoke, fumes. *ʃaafu d-duxxaan wi-ballaɣu l-maṭaafi* they saw the smoke and notified the fire-brigade. ‖*ma-fii-ʃ duxxaan min ɣeer naar [prov]* there's no smoke without fire. - *ʔid-duxxaan il-ɋurayyib yiɛmi [prov]* ≈ you can't see the wood for for trees. **2** /pl *ʔadxina*/ tobacco. *duxxaan il-maqɣ* chewing tobacco. ‖*ḥaqq id-duxxaan [euphem]* tip, pourboire.
دخّانة *duxxaana* /n/ smoke. ‖*ya duxxaana ruuḥi ɛaggaɛaan [children]* smoke go to the hungry one! (doggerel said when smoke is seen).
دخاخني *daxaxni* /n pl *-yya*/ tobacconist. ‖*mixaaṣim id-daxaxni* not on speaking terms with the tobacconist (i.e. always cadging cigarettes).
مدخنة *madxana* /n pl *madaaxin*/ **1** chimney, (smoke) funnel. **2** /no pl/ chainsmoker.
دخّن *daxxan* /vt/ **1** to smoke (cigarettes etc.). **2** to fill with smoke, make smoky. *ʔinta daxxant il-ʔooɋa* you've made the whole room smoky! **3** to fumigate, smudge. — /vi/ **4** to give off smoke. *ʔil-lamba bi-tdaxxan* the lamp is smoking. ‖*ṣabaḥ midaxxan* he got up in the morning fuming. - *manaxiir-u mdaxxana* he's very angry, he's breathing fire. **5** to fill up with smoke, become smoky. *ɛenay-ya daxxanit* my eyes became full of smoke. *ʔil-ʔooɋa daxxanit* the room filled with smoke. - vn *tadxiin*; ava/pva *midaxxan*.
مدخّن *midaxxan* /adj/ smoked, preserved by smoking (of cured meat, fish etc.). ‖*ḥikayit-hum midaxxana* ≈ their story is infamous.

د خ ن [2]
دخن *duxn* /n/ millet.

د خ ن و ق
دخنوق *daxnuuq* /n pl *daxaniiq*/ corner niche, hole. ‖*daaxil fi-daxaniiq-u* he has wormed himself into his favour.
دخنوقة *daxnuuqa* /n/ small niche.

د د ب ا ن
ديدبان *dadabaan, didabaan* <P *dîdbân*> /n pl *-aat*/ sentry.

د د ى
دادى *daada*[2] /vt/ to humour, soothe. *ʃana ɛammaal ʃadaadi fii miṣ-ṣubḥ*[i] *wala fii fayda* I've been handling him with kid gloves for a long time, to no avail. - vn *midadiyya*; ava *midaadi*.
اتدادى *ʔitdaada* or *ʔiddaada* /vi/ **1** to be soothed, be humoured. **2** to saunter. *ga yiddaada ɛala ʃaɋall*[i] *min mihl-u wala kaʃinn*[a] *ɛandu fuyl* he came sauntering in at his ease, as if he had no work. - ava/iva *mitdaadi*.

د ر
درة، ذرة *dura* /coll n/ maize, corn. *dura ɛweega* curved sorghum, a name for varieties of Sorghum vulgare and Andropogon sorghum. *dura ʃaami* Indian corn (Zea mays). *dura maʃwi* (or *maɋli*) roasted corn-on-the-cob. *dura mfaʃʃar* popcorn. ‖*ʔil-ɛeeʃ dura wik-kalaam ruumi [prov]* the bread is coarse, the talk highfalutin (of pretentiousness).
درة *darawa* /n/ *[rur]* maize cut before maturity for use as green fodder.

د ر ا م
دراما *diraama* <prob Engl> /n/ melodrama.
درامى *diraami* /adj/ melodramatic.

د ر ب
درب *darb* /n pl *duruub*/ **1** path, way, route. ‖*darb il-ʔarbiɛiin* a route through the Western Desert from Sudan, passing through the Egyptian oases. **2** main lane (in a neighbourhood). ‖*ʔid-darb il-ʔaḥmar* one of the main thoroughfares of the area of Cairo built up during the medieval period, now also the designation of the *ɋism* including most of that area.
درّابة *durraaba: baaba xuff*[i] *wi-ɋfil id-durraaba* (now it's the month of) Baaba, come in and close the gate (against the cold).
درّب *darrab* /vt/ to train, coach. *darrabt-u-hum ɛala ḍarb in-naar* I trained them to shoot. *tadriib ɛaskari* military training. *taḥt it-tadriib* in training. ‖*mara*

mdarraba a hard-bitten bitch of a woman. - vn *tadriib*; ava/pva *midarrab*.

تدريب *tadriib* /n pl -*aat*/ training exercise, practice. *ʕig-giraaḥa ɛayza tadribaat ma-lhaa-ʃ ḥadd* surgery requires endless practice.

تدريبى *tadriibi* /adj/ pertaining to training. *fatra tadribiyya* training period.

مدرّب *mudarrib* /n */ trainer, coach. *mudarrib ʕusuud* lion trainer. *mudarrib koora* football coach.

اتدرّب *ʕitdarrab* or *ʕiddarrab* /vi/ to be trained. - iva *mitdarrab*.

د ر ب ز

درابزين *darabziin* /n pl -*aat, -aat*/ **1** banister. **2** *[naut]* bulwark. - also *tarabziin*.

د ر ب ك

دربك *darbik* **1** /vt/ to reduce to chaos. *ʕil-ɛiyaal darbiku l-beet fi-ɣyaab-i* the kids made a shambles of the house while I was away. *ḥ-adarbik id-dinya ɛala dmaaɣ-ak* I'll get you into real trouble! **2** /vi/ to make a din or commotion. *ɛamal darbaka ɛal-faaḍi* he made a big fuss about nothing. - vn *darbaka*; ava/pva *midarbik*.

دربكة *ḍarabukka* /n pl -*aat*/ small earthenware hand drum. ‖*fuɣl id-darabukka* coquettishness.

اتدربك *ʕitdarbik* or *ʕiddarbik* /vi/ to fall apart, collapse. *ʕid-dinya ddarbikit ɛala baɛḍ-a-ha* the world's a shambles, everything's in an uproar. *ʕiddarbik ɛas-sillim* he tumbled down the stairs. - ava *mitdarbik*.

د ر ب ك س

دربوكس *darabuks, darabuks* <prob Engl> /n pl -*aat*/ *[auto]* gear-box.

د ر ب ى ه

درابيه *darapeeh* <Fr *drapé*> /adj invar/ draped (style).

د ر ج ١

درج *darag*[1] *(u)* /vt/ **1** to break in, train. *baɛd*[i] *ma nudrug-u fiʃ-fuɣl*[i] *ʃwayya yibqa yaaxud mahiyya* after we have given him a little training in the work he will start drawing a salary. **2** *[Isl]* to wrap (a corpse in a shroud). — /vi/ **3** to make a start. *min ʕawwil ma darag fil-waẓiifa* from when he first started in the job. - vn *darg, daragaan*; ava *daarig*; pva *madruug*.

¶ *darag ɛala* to become habituated to. *daragna ɛala kida min wi-ḥna ṣɣayyariin* we've been accustomed to such things since we were children.

دارج *daarig* /adj/ **1** popular, common (of speech, language). *ɛibaara darga* a popular expression. *ʕil-luɣa d-darga* the colloquial language. **2** *(ʕiqaaɛ) daarig [mus]* (a rhythmic mode) in three-quarter time consisting of a strong beat, a rest, and a weak beat, or in 6/8 time consisting of a strong beat, a rest, a weak beat, a strong beat, a rest, and a strong beat.

دارجة *darga* /n pl -*aat*/ headband (of a book).

درج *durg* /n pl *ʕadraag, diraag, duruug*/ drawer. *durg il-maktab* the desk drawer. ‖*durg*[i] *kabriit* a box of matches (as distinct from a booklet).

درج *darag*[2] /n/ **1** /coll n/ step(s), stair(s). **2** /pl *ʕadraag*/ layer of a burial shroud.

درجة *daraga, daraga* /n pl -*aat, -aat*/ **1a** /unit n/ a step. *sillim bi-sabaɛ daragaat* a stairway with seven steps. *daraga daraga* step by step. **1b** *[mus]* (whole) step. *nuṣṣ*[i] *daraga* half step. **2a** grade. *ʕiz-zeet daragaat wi-ʕanwaaɛ* oil comes in various grades and types. *tazkara daraga ʕuula* a first-class ticket. **2b** grade, rank. *murattab-u marbuuṭ ḥasab id-daraga* his salary is fixed according to his rank. *daragit ʕustaaẓ* professorship. *daragaat ik-kahanoot [Chr]* clerical orders. **2c** grade, mark (in an examination). *xad daraga ɛalya fil-imtiḥaan* he got a high mark in the examination. *daraga ɛilmiyya* (or *gaamiɛiyya*↑) academic degree. **3** degree, point (of measurement). *zawya tisɛiin daraga* a ninety-degree angle. *daragit il-ḥaraara* the temperature. *daragit inṣihaar* melting point. *li-ʕaaxir daraga* to the utmost degree, to the nth degree. *li-daragit ʕinn...* to the degree that ..., to the extent that ....

اتدرج *ʕitdarag* or *ʕiddarag* /vi/ **1** to be inserted, be included. **2** to be trained. - iva *mitdirig*.

اندرج *ʕindarag* = *ʕitdarag*. - iva *mindirig*.

درّج *darrag* /vt/ **1a** to give a stepped form to. *darragt*[i] *ʃaɛr-u bil-miʃṭ*[i] *wil-maqaṣṣ* I tapered his hair with the comb and the scissors. **1b** to grade, graduate. *tadriig il-quṭn* cotton grading. *bi-ydarragu l-masaaṭir bis-santi wil-buuṣa* they mark off rulers in centimetres and inches. *ʕil-ḥukuuma bi-tdarrag il-muwaẓẓafiin* the government classifies employees by grades. **2** to move along (in a group). *darrag ik-kutub ʃiwayya* move the books along a bit! **3** to train (in). *bi-ndarrag-hum ɛaʃaan yibqu sufragiyya* we train them to be waiters. - vn *tadriig*; ava/pva *midarrag*.

تدريج *tadriig* /vn/ ‖*bit-tadriig* gradually.

تدريجة *tadriiga* /inst n, pl -*aat*/ stepped or layered haircut.

تدريجى *tadriigi* **1 2** /adj/ gradual. /adv/ gradually, by degrees.

مدرّج *mudarrag* /n pl -*aat*/ **1** amphitheatre, auditorium, lecture room, grandstand, stand (in a stadium). **2** *[mus]* register. *ʕil-mudarrag il-ɛaali* upper register.

ʃil-mudarrag il-wasaṭ middle register. ʃil-mudarrag il-waaṭi low or bass register.

اتدرّج ʃitdarrag or ʃiddarrag /vi/ passive of *darrag*. - iva *mitdarrag*.

أدرج ʃadrag /vi/ to insert, include. ʃidrig ism-i fik-kaff put my name on the list. - vn ʃidraag; ava *mudrig*; pva *mudrag*.

استدرج ʃistadrag or ʃistadrig /vt/ to draw (s.o.) out (with the purpose of eliciting information). ʃistadragt-u (fik-kalaam) li-ɣaayit ma kaʃaf ɛan il-ḥikaaya kull-a-ha I led him on until he revealed the whole affair. - vn ʃistidraag; ava *mistadrag, mistadrig*; pva *mustadrag*↑.

د ر ج ²

درّاج durraag /coll n/ *[zool]* francolin.

درّاجة durraaga /unit n, pl -aat/ a francolin.

د ر ج ى

دورجى durgi <T dört cihar> /n pl durgiyyaat/ pair of fours (in backgammon).

د ر د ب

دردب dardib 1 /vt/ to cause to dribble, cause to trickle. ma-tdardib-ʃ il-ɛaṣiir min buqq-ak don't dribble the juice out of your mouth! 2 /vi/ to dribble, trickle. ʃil-ḥubuub dardibit miʃ-ʃuwaal the grains trickled out of the sack. - vn dardaba; ava/pva midardib.

اتدردب ʃitdardib or ʃiddardib /vi/ to dribble, trickle. ‖ ʃis-sakraan iddardib ɛas-sillim the drunk fell sprawling down the stairs. - ava mitdardib.

د ر د ج

دردج dardig /vi/ to bump, be bumpy (of roads, old cars etc.). - also dagdig. - ava midardig.

د ر د ح

دردح dardaḥ /vt/ to educate in the ways of the world, make sophisticated. kaan fallaaḥ itgawwiz bint[i] bandar dardaḥit-u he was a peasant (but) married a town girl who gave him some polish. - vn dardaḥa; ava/pva midardaḥ.

اتدردح ʃitdardaḥ or ʃiddardaḥ /vi/ to become or be made worldly-wise. - ava/iva mitdardaḥ.

د ر د ر ¹

دردر dardar /vt/ to scatter, sprinkle. bi-ydardar il-mashuuq ɛag-garḥ he sprinkles the powder over the wound. - vn dardara; ava/pva midardar.

اتدردر ʃitdardar or ʃiddardar /vi/ to be scattered, be sprinkled. - iva mitdardar.

د ر د ر ²

دردورة darduura 1 /n pl daradiir/ toothless gum. 2 daradiir /pl n/ milk teeth beginning to emerge through gums.

د ر د ر م see د ن د ر م : dardurma

د ر د ش

دردش dardiʃ /vi/ to chat. ɋaɛdiin yidardiʃu zayy[i] ma ykuun ma-warahum-ʃ[i] ʃuɣl they keep on chatting as if they have nothing to do. -vn dardaʃa; ava midardiʃ.

د ر د ع

دردع dardaɛ /vt/ to give (a drink to s.o.) ungraciously or with accompanying curses. huwwa ɋaawiz id-dawa - dardaɛuu-lu bis-simm he wants the medicine, so let him bloody well have it! - vn dardaɋa; ava/pva midardaɛ.

اتدردع ʃitdardaɛ or ʃiddardaɛ /vt/ *[abus]* to gulp down, wolf down. ʃidfaɛ taman illi ddardaɛt-u pay up for what you've wolfed! - ava/pva mitdardaɛ.

د ر د ك

دردك dardik = darbik. - vn dardaka; ava midardik.

اتدردك ʃitdardik or ʃiddardik = ʃitdarbik. - ava mitdardik.

د ر د م

دردم dardim 1 /vt/ to fill up (especially with earth or the like). dardimu n-nuqra bil-ḥigaara they filled in the hole with stones. 2 /vt and vi/ to cover over, bury. rameena l-giifa fil-ḥufra w-dardimna ɋaleeha (or dardimnaa-ha) bit-turaab we threw the carcass into the hole and covered it over with earth. - vn dardama; ava midardim.

اتدردم ʃitdardim or ʃiddardim /vi/ to be covered over (with earth, stone etc.). - iva mitdardim.

د ر د ى

دردى dirdi <P durdî> /n/ dregs. ‖ ḥ-axalli nhaar-u dirdi I'll give him hell!

د ر ر ¹

درّ darr (i) 1 /vt/ to cause to flow plentifully. ʃil-biira bi-tdirr il-bool beer acts as a diuretic. 2 to flow (of milk). - vn darr, dararaan, ʃidraar; ava daarir, mudirr.

درّة darra /n pl -aat/ udder.

إدرار ʃidraar /n/ yield (of milk).

مدرّ mudirr /n pl -aat/ diuretic.

د ر ر ²
درّ *durr* /coll n/ pearl(s).
درّة *durra*[1] /unit n, pl *durar*/ a pearl. *kalaam-ak kull-u durar* all your words are pearls (of wisdom).
درّي *durri* /adj/ lustrous, shining (like stars). *ʕik-kawaakib id-durriyya* the gleaming stars.

د ر ر ³
درّة *durra*[2] /n pl *-aat, durar*/ parrot.

د ر ر ⁴ see ز ر ر ²: *durriyya*

د ر ز ¹
درز *daraz (i)* /vt/ to cram, jam, pack tightly. *daraz if-fanṭa kutub* he stuffed the case full of books. *sinaan-u madruuza f-baʕḍ* his teeth are close together. - vn *darz*; ava *daariz*; pva *madruuz*.
درزة *darza* /inst n/ a jammimg. *kaanit iṣ-ṣaala madruuza darza* the hall was jam-packed.
اندرز *ʔindaraz* /vi/ to be crammed, be packed tightly. - iva *mindiriz*.
اتدرز *ʔitdaraz* or *ʔiddaraz* = *ʔindaraz*. - iva *mitdiriz*.
درّز *darriz* /vt/ to dent, make indentations in (s.th.) by pressure, carving etc. - vn *tadriiz*; ava/pva *midarriz*.
اتدرّز *ʔitdarriz* or *ʔiddarriz* /vi/ passive of *darriz*. - iva *mitdarriz*.

د ر ز ²
درزي *durzi* /pl *duruuz*/ **1** /adj/ **1a** Druze, pertaining to the Druzes. **1b** hard-hearted, tight-fisted. **2** /n/ a Druze.

د ر س ¹
درس *daras*[1] *(i)* /vt/ to study. *fi-sana ʔuula b-yidris magmuuʕit ʕuluum muxtalifa* in the First Year he studies a number of different subjects. *ḫ-adris il-muzakkira* I'll study the memo. - vn *diraasa, dars*; ava *daaris*; pva *madruus*.
دراسة *diraasa* /n pl *-aat*/ **1** study (of a subject). *dirasaat ʃarqiyya* Oriental Studies. **2** (artistic) study. *ʔiṣ-ṣuura di draasa l-fallaaḥa maṣriyya* this picture is a study of an Egyptian peasant woman.
دراسي *diraasi* /adj/ pertaining to study. *ʔik-kutub id-dirasiyya l-muqarrara* the books set for study.
درس *dars* /n pl *duruus*/ lesson. *miʃ kifaaya d-dars illi tʕallimnaa fil-ḥarbeen illi faatu* isn't the lesson that we learned in the last two wars enough?
مدرسة *madrasa* /n pl *madaaris*/ **1** school. *ʔil-madaaris l-ibtidaʔiyya* elementary schools, primary schools. *ma niftaḫ madrasa fin-naʃl* let's open a school for picking pockets. **2** school of thought. *madaaris ʔadabiyya* literary schools.
مدرسي *madrasi* /adj/ pertaining to school or to school-teaching, pedagogical. ‖*tafkiir madrasi* shallow thinking.
اتدرس *ʔitdaras*[1] or *ʔiddaras*[1] /vi/ to be studied. - iva *mitdiris*.
اندرس *ʔindaras*[1] = *ʔitdaras*[1]. - iva *mindiris*.
درّس *darris* /vt/ to teach (a subject). *ḫ-adarris iṭ-ṭalaba tariix* I'll teach the students history. - vn *tadriis*; ava *midarris*.
مدرّس *mudarris* /n */ (school)teacher. *mudarris ʔawwal* senior teacher (in a subject). *mudarris xaaṣṣ* private teacher. *daragit mudarris [acad]* university rank equivalent to assistant professor (U.S.) or lecturer (U.K.). *mudarris luva* university language-teacher (without the status of a lecturer).
اتدرّس *ʔitdarris* or *ʔiddarris* /vi/ to be taught. - iva *mitdarris*.
اتدارس *ʔitdaaris* or *ʔiddaaris* /vi/ to give joint attention or consideration (to a subject). *baʕḍ[i] ma ddarisna fil-mawḍuuʕ ittafaqna ʕala ʃruuṭ maqbuula* after we studied the subject together we came to agreeable terms. - ava *mitdaaris*.

د ر س ²
درس *daras*[2] *(i)* /vt/ to thresh. - vn *diraas*; ava *daaris*; pva *madruus*.
دريس *diriis* /n/ dried clover (used as animal feed).
اتدرس *ʔitdaras*[2] or *ʔiddaras*[2] /vi/ to be threshed. - iva *mitdiris*.
اندرس *ʔindaras*[2] = *ʔitdaras*[2]. - iva *mindiris*.

د ر س ³ see ض ر س: *dirs*

د ر س ⁴ see د ر ي س: *diriisa*

د ر س و –
درسوار *diriswaar* <Fr *dressoir*> /n pl *-aat*/ small sideboard.

د ر ش
درش *darʃ* (also *ʔabu darʃ*) /prop n/ nickname for Mustafa.

د ر ص ي ن
دارصيني *darṣiini* <P *dâr-chînî*> /n/ cinnamon.

¹ د ر ع

درع *dirɛ* /n pl *duruuɛ*/ **1** shield. *faaz bi-dirɛ il-quwwaat il-musallaḥa* he won the Armed Forces Shield (trophy). **2** (piece of) armour. *dirɛ[i] dabbaaba* tank armour. **3** handlebar grip (of a bicycle).

درّاعة *darraaɛa* /n pl *-aat*/ armoured cruiser.

درّع *darraɛ[1]* /vt/ to armour, equip with armour. - vn *tadriiɛ*; ava/pva *midarraɛ*.

مدرّعة *mudarraɛa* /n pl *-aat*/ armoured car. *ʃil-mudarraɛaat* the Tank Corps.

اتدرّع *ʃitdarraɛ[1]* or *ʃiddarraɛ[1]* /vi/ to be armoured. - iva *mitdarraɛ*.

² د ر ع

ذراع، دراع *diraaɛ* /n pl *-aat, ʃidriɛa, diriɛa, ʃudruɛ*/ **1a** arm, forearm. *ḫuqna fid-diraaɛ* an injection in the arm. ‖ *ʃabu draaɛ* form of reference to a male with a deformed arm. - *da raagil bi-draaɛ-u* that's a man who relies on his own efforts. - *bid-diraaɛ* (1) by dint of great effort. (2) by force. **1b** foreleg (of an animal). **1c** shoulder (of meat). **2a** arm, lever. *diraaɛ sanafoor* arm on a (railway) signal, semaphore arm. **2b** connecting-rod. **3** unit of linear measurement. *diraaɛ baladi* unit of linear measurement equal to 58 centimetres. *diraaɛ miɛmaari* unit of linear measurement equal to 75 centimetres.

دراعة *diraaɛa* = *diraaɛ* 2.

درّع *darraɛ[2]* /vt/ **1** to elbow. *darraɛ-ni f-sidr-i* he elbowed me in the chest. **2** to take the (*diraaɛ*) measurement of. *darraɛ-li l-ʃooḍa di* measure this room for me! — /vi/ **3** to make an obscene gesture with the forearm. **4** to swagger. *yimʃi ydarraɛ fis-sikka tqul-f[i] famʃuun* he swaggers along the road as if he were Samson. - vn *tadriiɛ*; ava/pva *midarraɛ*.

اتدرّع *ʃitdarraɛ[2]* or *ʃiddarraɛ[2]* /vi/ to be measured out by the *diraaɛ*. - iva *mitdarraɛ*.

د ر ع م

درعمى *darɛami* /n * and pl *daraɛma*/ graduate of the Dar el-Ulum (cf. *daar*[3] 2).

د ر غ م

درغم *darɣam* = *darmaɣ*. - vn *darɣama*; ava/pva *midarɣam*.

اتدرغم *ʃitdarɣam* or *ʃiddarɣam* = *ʃitdarmaɣ*. - ava/iva *mitdarɣam*.

د ر ف

درفة *darfa* /n pl *-aat, durafi*/ leaf (of a door, window, screen etc.). ‖ *gaab duraf-ha* he finished it off completely. - also *ḍalfa*.

¹ د ر ف ل

درفل *darfil* <T *tirfil* from It> **1** /vt/ to roll (steel into sheets). **2** /vi/ to pitch, heave, roll. *ʃil-markib bi-tdarfil fil-baḥr il-ɛaali* the ship tosses in the rough sea. - vn *darfala*; ava/pva *midarfil*.

درفلة *darfala* /vn/ ‖ *looḥ darfala [naut]* bilge keel.

اتدرفل *ʃitdarfil* or *ʃiddarfil* /vi/ **1** to be rolled. **2** to pitch, heave, roll. - vn *darfala*; ava/iva *mitdarfil*.

² د ر ف ل

درفيل *darfiil* <prob Lat *delphinus*> /n pl *darafiil*/ **1a** dolphin. **1b** big beefy person. **2** roller. **3** mooring post in the seabed.

– د ر ف ل

دارفلفل *darfilfil* <P *dârfilfil*> /n/ long pepper.

¹ د ر ق

درق *daraq[1]* /coll n/ shield(s).

درقة *daraqa* /unit n, pl *-aat*/ a shield.

² (د ر ق)

درق *daraq[2]* /n pl *-aat*/ *[text]* loom frame.

درقي *daraqi, daraqi* /adj/ thyroid. *ʃil-ɣudda d-daraqiyya* the thyroid gland.

د ر ق ا ع

درقاعة *durqaaɛa* /n pl *-aat*/ *[obsol]* floor space between two raised estrades.

¹ د ر ك

درك *dark↑* /n/ bottom, depth. *ʃid-dark il-ʃasfal min in-naar [Isl]* the depths of hell.

درك *darak, darak* /n pl *-aat*/ *[obsol]* area of watch or patrol, beat. *ɣafiir darak* official watchman.

مدارك *madaarik* /pl n/ mental faculties. *madark-u wasɛa* he is broad-minded.

دارك *daarik* /vt/ to put in order, set right. *daarik il-mawḍuuɛ qabl[i] ma yiwṣal lil-buliiṣ* set the matter right before it reaches the police! - vn *midarka*; ava *midaarik*.

اتدارك *ʃitdaarik* or *ʃiddaarik* = *daarik*. - ava *mitdaarik*.

أدرك *ʃadrak↑* /vt/ **1** to realize, reach an understanding of. *ʃana ma-ʃadrakt[i]-ʃ qaṣd-ak* I didn't grasp your meaning. ‖ *lissa ma-yidrik-ʃ* he's still immature. **2** to catch up with. ‖ *ʃadrak-u l-moot* he died. - vn *ʃidraak*; ava *midrik, mudrik↑*.

إدرك *ʔidrak↓* /vi/ to reach puberty. *ʔil-bitt idrakit - ma-tnaṃ-ʃⁱ maʕa xwat-ha ʂ-ṣubyaan* the girl has reached puberty, she shouldn't sleep with her young brothers. - ava *midrik*.

إدراك *ʔidraak* /n/ consciousness, awareness, understanding. *da lissa ʕayyil ma-ʕanduu-ʃ ʔidraak* he's still too young to understand. *kaanit iṣ-ṣadma ʃdiida ma-baqaa-ʃ ʕandu l-ʔidraak* the shock was (so) great that he lost consciousness.

مدركات *mudrakaat↑* /pl n/ concepts. *mudrakaat baṣariyya* visual concepts.

استدرك *ʔistadrak* /vt/ to rectify or redress (s.th.) in good time. *ʔil-ʁalṭa stadraknaa-ha - fii ʔeeh taani* we put the mistake right (before any harm could be done) - what more could be wanted? - vn *ʔistidraak*; ava *mistadrak, mistadrik*; pva *mistadrak*.

د ر ك ²

درك *dirik* <Engl> /n pl *-aat*/ derrick.

د ر ك س –

دركسيون *diriksiyoon* (also *diriksoon*) <Fr *direction*> /n pl *-aat*/ *[auto]* steering-wheel. *diriksiyoon ʕal-yimiin* right-hand drive.

د ر م

see د ر ا م : *diraama, diraami*

د ر م غ

درمغ *darmaɣ* /vt/ **1** to roll (s.o. or s.th.) on the ground. **2** to cover with earth or mud. - vn *darmaɣa*; ava/pva *midarmaɣ*.

اتدرمغ *ʔitdarmaɣ* or *ʔiddarmaɣ* /vi/ **1** to roll or be rolled (on the ground). **2** to be covered with earth or mud. - ava/iva *mitdarmiɣ*.

د ر ن

درن *daran* /n/ **1** tuberculosis. **2** /coll/ *[bot]* tuber(s). **3** /pl *ʔadraan*/ dirt, filth.

درنة *darana, darana* /unit n, pl *-aat*/ *[bot]* a tuber.

درّن *darran* /vi/ **1** to become (very) dirty. *huduum-u darranit* his clothes got filthy. **2** to become tuberculous. *fiʃaʃ il-bani ʔaadam tidarran mis-sull* human lungs may contract tuberculosis. – /vt/ **3** to make dirty. **4** to cause tuberculosis in. **5** to cause to develop (small) swellings. - vn *tadriin*; ava/pva *midarran*.

اتدرّن *ʔitdarran* or *ʔiddarran* /vi/ passive of *darran*. - vn *tadarrun*; iva *mitdarran*.

د ر ه م

درهم *darhim* /n pl *daraahim, daraahim*/ **1** *[obsol]* dirhem, measure of weight equal to 3.12 grammes. **2** dirhem, a silver coin. ‖ *ʔid-daraahim maraahim* ≈ money is a remedy.

د ر و ¹

see د ر : *darawa*

د ر و ²

see د ر ى ² : *dirwa*

د ر و ³

see د ر ى ³ : *diraawa, daraawa, midarraawi, midarrawaati*

د ر و خ

دروخ *darwax* **1** /vt/ to cause to feel dizzy or giddy. *ʔil-ʁiliww^i bi-ydarwax-ni* heights make me giddy. **2** /vi/ to feel dizzy or giddy. *darwaxit wi-ʔuxma ʕaleeha* she felt dizzy and fainted. - vn *darwaxa*; ava *midarwax*.

اتدروخ *ʔitdarwax* or *ʔiddarwax* /vi/ to feel dizzy or giddy. - ava *mitdarwax*.

د ر و ش

درويش *darwiiʃ* <P *darwesh*> /n pl *darawiiʃ*/ **1** dervish, member of a Sufi order. **2a** godly person. **2b** person not quite right in the head.

دروش *darwiʃ* /vt/ **1** to make (s.o.) pious. **2** to make (s.o.) soft in the head. - vn *darwaʃa*; ava/pva *midarwiʃ*.

اتدروش *ʔitdarwiʃ* or *ʔiddarwiʃ* /vi/ **1** to become a member of a Sufi order. **2a** to adopt or affect the manners of a godly person. **2b** to go soft in the head. - ava *mitdarwiʃ*.

د ر ى ¹

دري *diri (a, a)* /vi/ to become aware. *min ɣeer ma yidra* without his realizing. *miʃ ḥa-yidru biyya* they won't realize I'm there. *ʔinta driit bi-lli ḥaṣal* have you heard what happened? ‖ *ma-drit-ʃ* you must have heard (the news I'm about to tell you). - vn *darayaan, diraaya*; ava *daryaan, daari*.

دراية *diraaya* /n pl *-aat*/ know-how, skill.

دريان *daryaan* /adj */ aware, conscious.

أدرى *ʔadraʾ* /el/ better/best informed. *ʕala kullᵃ ḥaal ʔinta ʔadra* ≈ anyhow, it is up to you since you know (about it) more than others do.

درّى *darraʾ* /vt/ to inform, notify. - ava *midarri*.

أدرى *ʔadra²* = *darra*. *ʔeef ʔadraa-ni* ≈ I have no idea (about that). ‖ *wi-min ʔadraa-k yimkin da ṣaḥiiḥ* ≈ who knows? it may be true.

د ر ى ²

درى *dira* /n/ sheltered or hidden place. *ʔiʃ-ʃamsᵃ ḥamya - ruuḥi ʔuqʕudi fid-dira* the sun is strong; go and

sit in the shade. ‖*bi-yiftaval fid-dira* he works on the sly. - /prepositionally/ *xallii-k dira l-ħeeṭ* stay in the shelter of the wall.

درو *dirwa* /n pl *-aat*/ **1** screen, protective wall. *ʃik-kaff*^{i} *wara dirwa* examination behind a screen. **2** shelter, sheltered place. *ɛamil-li dirwa ʃanaam fiiha* he's made me a refuge to sleep in.

دارى *daara* /vt/ **1** to hide, conceal. *bi-tdaari k-kitaab minni* (or *ɛanni*) *leeh* why are you hiding the book from me? — /vi/ **2a** to be secretive, keep one's affairs to oneself. *ʃana miʃ min illi bi-ydaaru* I am not the secretive type. *di ma-b-tiɛraf-ʃ*^{i} *tdaari* she does not know how to keep things to herself. *ħibb*^{i} *w-waari wi-krah wi-daari [prov]* ≈ show your love discreetly but hide your hate completely. **2b** to put behind cover, make a screen. *bi-ydaari ɛala ɛeen-u miʃ-fams* he is shielding his eyes from the sun. ‖*daari ɛala ʃamɛit-ak tiqiid [prov]* (shield your candle and it will burn) don't broadcast your plans lest people's knowledge of them jeopardize your success. - vn *midariyya*; ava *midaari*.

¶ *daara ɛala* to cover up for (s.o.). *ʃana ʃuft-ak bi-tisraq wi-dareet ɛaleek* I saw you stealing and covered up for you.

اتدارى *ʃitdaara* or *ʃiddaara* /vi/ to be hidden, hide oneself. *ʃiddaara f-qill*^{i} *ṣubaaɛ-u [prov]* ≈ he wished that the earth would swallow him up. - ava/iva *mitdaari*.

د ر ى [3]

دراوة، ذراوة *daraawa, diraawa* /n/ winnowing. *makanit diraawa* winnowing machine.

مدرى، مذرى، مذراة *midra* /n pl *-aat, midar, madaari*/ **1** winnowing fork. ‖*haati ya midra waddi ya sidra [prov]* (bring, winnowing fork; take, cooking pot) ≈ whatever is earned is quickly used up. **2** punt-pole.

درّى، ذرّى *darra*[2] /vt/ to winnow. *bi-nkawwim-u wi-ndarrii bi-makana* we heap it up and winnow it with a machine. - vn *tadriyya*; ava/pva *midarri*.

مدرّاوى *midarraawi* /n pl *-yya*/ one who winnows.

مدرّواتى *midarrawaati* /n pl *-yya*/ one who winnows.

اتدرّى *ʃitdarra* or *ʃiddarra* /vi/ to be winnowed. - iva *mitdarri*.

د ر ى س

دريسة *diriisa* <poss It *terraziere*> /n/ railway-track maintenance. *ɛaamil* (or *ɛaskari* or *xafiir*) *diriisa* railway-track maintenance worker.

د ز ى ن

دزّينة *duzziina, dazziina* <It *dozzina*> /n pl *-aat, dazaziin*/ dozen. *bid-duzziina* by the dozen, in great quantities. - also *tuzziina*.

(د س ت)

دست *dist* <prob P *dastî*> /n pl *dusuut*/ **1** brass pot or cauldron. *ʃilli yuqɛud fil-wisṭ*^{i} *yikkabb*^{a} *ɛalee ʃid-dist* he who sits in the middle will have the *dist* emptied over him (a children's rhyme). **2** *[metal]* small smelting furnace. **3** *[slang]* sucker. *ʃinta fakir-ni dist* do you take me for a sucker?

دستة *dasta* <P *dasta*> /n pl *-aat, disat*/ **1** dozen. *nuṣṣ*^{i} *dasta* half a dozen. *bid-dasta* by the dozen. **2** pack (not necessarily containing a dozen). *dastit kabriit* a carton of ten boxes of matches.

د س ت و ر

دستور *dustuur, dastuur*↓ <P *dastûr*> /n pl *dasatiir*/ **1** *[pol]* constitution. *ʃiħna mistanniyyiin id-dustuur id-daaʃim* we're waiting for the permanent constitution. — */dastuur* only/ **2** *[constr]* **2a** course of rough-cut limestone (trimmed on one side). **2b** set of blocks of wood (fixed into a wall) onto which a doorframe is fitted. **3** /no pl/ *[rur]* leave, permission. *min ɣeer ʃiħim wala dastuur* without so much as a by your leave. *dastuur ya syaad-i* by your leave, masters! (a form of address to spirits in *zaar* ceremonies).

دستورى *dustuuri* **1** /adj */ constitutional. **2** /n */ constitutionalist.

دستوريّة *dusturiyya*↑ /n/ constitutionality.

د س ر

دسرة *dusra* /n/ *[metal]* crimping (of metal sheet edges).

د س س

دسّ *dass (i)* **1** /vt/ to insert, insinuate. *dassit il-filuus fid-durg* she put the money inside the drawer. *ʃil-buliiṣ dass*^{a} *ɛaleehum muxbir* the police infiltrated them with a plain-clothes man. *ħ-adiss-i-lu simm*^{i} *fiʃ-ʃaay* I'll slip poison into his tea. **2** /vi/ to insinuate oneself. *huwwa lli dass*^{i} *benna* he's the one who came between us. - vn *dass*; ava *daasis*; pva *madsuus*.

دسيسة *dasiisa* /n pl *dasaayis*/ plot, intrigue.

دسّاس *dassaas* /n */ intriguer. ‖*ʃil-ɛirq*^{i} *dassaas [prov]* ≈ inherited characteristics are ever-present.

اتدسّ *ʃitdass* or *ʃiddass* /vi/ to be inserted, be insinuated. - iva *mitdass*.

اندسّ *ʃindass* = *ʃitdass*. - iva *mindass*.

اتدسّس *ʃitdassis* or *ʃiddassis* /vi/ to infiltrate oneself. - ava *mitdassis*.

د س و ق
دسوق *disuuq, dusuuq* /prop n/ Disuq, a town in the north-west of the Delta, known in particular for the shrine of the Muslim saint Ibrahim ed-Disuqi.
دسوقى *disuuqi, dusuuqi* /adj */ pertaining to the town of Disuq.
الدسوقيّة *ʕid-disuqiyya, ʕid-dusuqiyya* /prop n/ Sufi order founded by Ibrahim ed-Disuqi.

(د س ك)
دسك *disk*[1] <Engl> /n pl *-aat*/ **1** (news) desk. **2** (control) desk (in a recording studio).
دسك *disk*[2] <prob Engl> /n pl *-aat*/ **1** cymbal. **2** semaphore disc. **3** *[path]* (slipped) disc.
دسك *disk*[3] <Fr *disque*> /n pl *-aat*/ gramophone record.

د س م
دسم *dasam* /n/ fat (as an animal product). *gibna kamlit id-dasam* full-cream cheese.
دسم *disim, dasim*↑ /adj/ rich, heavy (particularly of food). *ʕil-ʕakl*[i] *da disim ɛala miɛdit-i* this food is too rich for my stomach. *da mawḍuuɛ dasim yiḥtaag li-tafkiir* that's a rich subject requiring thought.
دسامة *dasaama* /n/ fattiness, greasiness.
استدسم *ʕistadsim* /vt/ **1** to consider fatty or greasy. **2** to select for fattiness, greasiness or richness. -ava *mistadsim*.

د س م ب ر
ديسمبر *disimbir, disimbar* /n/ December.

د س ن ت –
دوسنتاريا *dusintarya* <It *dissenteria*> /n/ *[path]* dysentery.

د س ى ه
دوسيه *duseeh* <Fr *dossier*> /n pl *-aat*/ file, dossier, folder. ‖*lu duseeh wisix ɛandina* he has a bad record with us. -*ma-fii-ʃ daaɛi l-fatḥ*[i] *dusehaat* there's no need to bring things out into the open!

د ش ت
دشت *daʃat (i)* /vt/ to disregard, ignore. *daʃat il-muzakkira* he paid no attention to the memorandum. -vn *daʃt*; ava *daaʃit*; pva *madʃuut*.
دشت *daʃt* (also *waraq daʃt*) /n/ waste paper, scrap paper.
اتدشت *ʕitdaʃat* or *ʕiddaʃat* /vi/ to be disregarded, be ignored. -iva *mitdiʃit*.
اندشت *ʕindaʃat* = *ʕitdaʃat*. -iva *mindiʃit*.
دشّت *daʃʃit* = *daʃat*. -vn *tadʃiit*; ava/pva *midaʃʃit*.
اتدشّت *ʕitdaʃʃit* or *ʕiddaʃʃit* = *ʕitdaʃat*. -iva *mitdaʃʃit*.

د ش د see د ش ى د : *diʃiida, daʃiida*

د ش د ش
دشدش *daʃdiʃ* /vt/ to reduce to fragments, smash, shatter. *ʕiṣ-ṣudaaɛ daʃdiʃ dimaaɣ-i* the headache split my skull. -vn *daʃdaʃa*; ava/pva *midaʃdiʃ*.
اتدشدش *ʕitdaʃdiʃ* or *ʕiddaʃdiʃ* /vi/ to be reduced to fragments, be smashed, be shattered. -iva *mitdaʃdiʃ*.

د ش ش [1]
دشّ *daʃʃ (i)* /vt/ **1** to mash, pound. *daʃʃit id-dura ɛar-raḥaaya* she pounded the maize in the quern. ‖*qaaɛid yidiʃʃ*[i] *kalaam faariɣ* he keeps on churning out nonsensical talk. -*yidiʃʃ*[i] *f-fuɣl-u* he slogs away at his work. **2** to smash, shatter. *ḥ-adiʃʃ iṭ-ṭabaq ɛala raas-ak* I'll smash the plate on your head! -vn *daʃʃ*; ava *daaʃiʃ*; pva *madʃuuʃ*.
دشيش *diʃiiʃ* /n/ **1** something (specifically grain or beans) which has been mashed or pounded. **2** beads and stones woven onto a net placed around a corpse.
دشيشة *diʃiiʃa* /n/ something mashed, pounded, or broken to pieces.
دشّاش *daʃʃaaʃ* /n */ **1** one who engages in mashing or pounding. **2a** one who slogs at his work profitlessly, hack. **2b** one who engages in prolonged and fruitless chatter, natterer.
مدشّ *midaʃʃ* /n/ **1** any tool or instrument used for mashing or pounding. **2** one who chatters at length.
اتدشّ *ʕitdaʃʃ* or *ʕiddaʃʃ* /vi/ to be mashed, be pounded. -iva *mitdaʃʃ*.
اندشّ *ʕindaʃʃ* = *ʕitdaʃʃ*. -iva *mindaʃʃ*.
دشّش *daʃʃiʃ* /vt/ to mash or pound lightly. -vn *tadʃiiʃ*; ava/pva *midaʃʃiʃ*.
مدشّشة *midaʃʃiʃa* /n pl *-aat*/ bean-mashing machine.
اتدشّش *ʕitdaʃʃiʃ* or *ʕiddaʃʃiʃ* /vi/ to be pounded or mashed lightly. -iva *mitdaʃʃiʃ*.

[2] (د ش ش)
دشّ *duʃʃ*[1] <Fr *douche*> /n/ **1** /pl *ʕadfaaf, difaaf, dufuuf*/ **1a** shower. *xadt*[i] *duʃʃ*[i] *sariiɛ* I took a quick shower. **1b** douche. **2** /no pl/ scolding. *ʕiddaa-ni duʃʃ*[i] *gaamid* he gave me a sound scolding.
دشّ *duʃʃ*[2] <P *dû-shash*> /n pl *ʕadfaaf*/ double six (in backgammon).

د ش ل ی –
دشليون *difilyoon* /n pl *-aat/ [joc]* a vast number.

د ش م
دوشمة *dufma* /n pl *dufam/ [mil]* bunker. *dufmit madfaɛ* gun emplacement.

د ش ن
دشن *daffin* /vt/ **1** to launch (a ship, an enterprise etc.). *ɦaflit tadfiin* a launching party. **2** to consecrate (a church). - vn *tadfiin*; ava/pva *midaffin*.
تدشين *tadfiin* /n pl *-aat/* **1** launching (of a ship, an enterprise etc.). **2** consecration (of a church).
اتدشن *ʔitdaffin* or *ʔiddaffin* /vi/ **1** to be launched (of a ship, enterprise etc.). **2** to be consecrated (of a church). - iva *mitdaffin*.

د ش ی د
دشيدة *difiida, dafiida* /n pl *dafaayid/* peg on the yoke of plough (see Pl.D, 9).

د ط ط
دوطّة *duṭṭaˀ* <It *dote*> /n pl *-aat/ [Chr]* dowry. - also *doota, dooṭa*.

د ع ب
دعابة *duɛaabaˀ* /n pl *-aat/* joke, amusing story.
داعب *daaɛib* /vt/ **1** to tease, pull (s.o.'s) leg. **2** to fondle, play with. *bi-tdaaɛib ibn-a-ha ṣ-ṣuvayyar* she is playing with her little son. - vn *midaɛba*; ava *midaaɛib*.
مداعبة *mudaɛba, mudaaɛabaˀ* /n pl *-aat/* caress, affectionate conversation.
اتداعب *ʔitdaaɛib* or *ʔiddaaɛib* /vi/ to exchange caresses, affectionate words etc. - ava *mitdaaɛib*.

د ع ب س
دعبس *daɛbis* /vi/ **1** to grope around (in search of s.th.). *laazim tidaɛbis fi-kull[a] ɦaaga* you must dig into everything. **2** to become sad or depressed. - vn *daɛbasa*; ava *midaɛbis*.
اتدعبس *ʔitdaɛbis* or *ʔiddaɛbis* /vi/ (impersonal) passive of *daɛbis*. *ʔil-maɦfaẓa mitdaɛbis fiiha* the wallet has been tampered with. - iva *mitdaɛbis*.

د ع ب ل
دعبل *daɛbil* /vt/ **1** to cause to fade or wither. *ʔil-ɛaya daɛbil-ha* illness withered her body. *ʔil-gafaaf daɛbil iz-zarɛ* the drought withered the plants. *ʔil-ɦizn[i] daɛbil wiff-a-ha* sorrow turned her face wan. **2** to soften (e.g., dough). *daɛbili l-ɛagiina bi-ʃwayyit mayya* soften the dough by adding a little water. – /vi/ **3** to become ill-looking. *baɛd[i] ma ɦiblit daɛbilit ɋawi* after she became pregnant she looked very poorly. - vn *daɛbala*; ava/pva *midaɛbil*.
اتدعبل *ʔitdaɛbil* or *ʔiddaɛbil* /vi/ **1a** to wither, fade. **1b** to become ill-looking. **2** to become softer (e.g., of dough). **3** passive of *daɛbil*. - ava/iva *mitdaɛbil*.

د ع ر
دعارة *daɛaara, diɛaara* /n/ prostitution. *beet daɛaara* brothel.
داعر *daaɛir* /adj */ ruthless (of a man), sluttish (of a woman).

د ع س
دعس *daɛas (a)* /vi/ **1** to force one's way. *daɛas bi-kitf-u fiz-ẓaɦma* he shouldered his way into the crowd. **2** to step, stamp. *ʔidɛas ɛala ṣ-ṣurṣaar da ɋabl[i] ma yigri* step on that cockroach before it gets away! – /vt/ **3** to insert, cram, force (s.th. into s.th.). *daɛas diraaɛ-u fiʃ-ʃaɋɋ* he forced his arm into the crack. **4** *[coarse slang]* to copulate with, stuff. - vn *daɛs*; ava *daaɛis*; pva *madɛuus*.
اتدعس *ʔitdaɛas* or *ʔiddaɛas* /vi/ passive of *daɛas*. - iva *mitdiɛis*.

د ع ق
دعق *daɛaɋ (a)* /vt/ **1** to slam, bang. **2** to do in a hasty haphazard fashion. *law ma-nta-ʃ ɛaarif tiɛmil-ha ʔidɛaɋ-ha w-xalaṣ* if you don't know how to do it, just do it any old way and get it over with! - vn *daɛɋa*; ava *daaɛiɋ*; pva *madɛuuɋ*.
مدعوق *madɛuuɋ* /n pl *madaɛiiɋ/* damned thing, cursed thing. *siib il-madɛuuɋ da* leave that damned thing alone!
اتدعق *ʔitdaɛaɋ* or *ʔiddaɛaɋ* /vi/ passive of *daɛaɋ*. - iva *mitdiɛiɋ*.
اندعق *ʔindaɛaɋ* = *ʔitdaɛaɋ*. - iva *mindiɛiɋ*.

د ع ك
دعك *daɛak (a)* /vt/ **1** to rub hard, scrub, scour. *ma-tidɛak-ʃ[i] ɛeen-ak kida w-ʔiid-ak wisxa* don't rub your eye like that when your hand is dirty. *ʔidɛaki l-huduum kuwayyis* rub the clothes hard! **2** to give (s.o.) trouble, harass. *ʔana daɛakt-u daɛka kwayyisa* I gave him a really hard time. *ʔabuu-ya madɛuuk fiʃ-ʃuxl* my father has a very hard time at work. - vn *daɛk*; ava *daaɛik*; pva *madɛuuk*.
دعكة *daɛka* /n pl *-aat/* **1** /inst n/ a rub, a rubbing. **2** trouble, hardship. ‖*yigi-lhum daɛka* one day they'll

find life isn't so easy (said of those who are carefree).
اتدعك ʔitdaʕak or ʔiddaʕak /vi/ **1** to be rubbed, be scrubbed. **2** to gain experience, become experienced. *ʔiddaʕak fiʃ-ʃuɣla di kwayyis* he's become expert at this work. *hiyya lli bi-tʕuul wilaad-ha - ʔiddaʕakit fid-dunya kwayyis* she's the one who supports her family - she really knows her way around. - ava/iva *mitdiʕik*.
اندعك ʔindaʕak = ʔitdaʕak. - ava/iva *mindiʕik*.
دعّك daʕʕak = daʕak. - vn *tadʕiik*; ava/pva *midaʕʕak*.
تدعيكة tadʕiika = daʕka.
مدعّكاتى midaʕʕakaati /n pl -yya/ masseur.
اتدعّك ʔitdaʕʕak or ʔiddaʕʕak = ʔitdaʕak. - ava/iva *mitdaʕʕak*.

د ع ك ش

دعكش daʕkiʃ /vi/ to rummage. *baṭṭal tidaʕkiʃ fiʃ-ʔadraag* stop ransacking the drawers! - vn *daʕkaʃa*; ava *midaʕkiʃ*.

د ع م

دعم daʕm /n/ support. *ʔid-daʕm is-suɣuudi lil-bilaad il-ɣarabiyya* Saudi support for the Arab countries.
دعامة diɣaama, duɣaama↑ /n pl -aat/ support, prop, pillar.
دعّم daʕʕam↑ */vt/ to support, prop up. *bi-ydaʕʕam kalaam-u b-ʔadilla* he supports what he says with evidence. *sanduuq tadʕiim in-naqd* currency reserve fund. - vn *tadʕiim*; ava/pva *midaʕʕam*.
اتدعّم ʔitdaʕʕam or ʔiddaʕʕam /vi/ to be supported, be propped up. - iva *mitdaʕʕam*.

د ع و see د ع ى : *daʕwa*

د ع و ر

دعور daʕwar /vt/ to send spinning, send reeling. *xabaṭ-u daʕwar-u fiʃ-ʃarḍ* he hit him and sent him reeling to the ground. - vn *daʕwara*; ava/pva *midaʕwar*.
اتدعور ʔitdaʕwar or ʔiddaʕwar /vi/ to reel back (from a blow). *xad il-buks[i] wi-ddaʕwar fiʃ-ʃarḍ* he received the blow and fell reeling to the ground. - ava *mitdaʕwar*.

د ع ى

دعا daʕa[1] *(i)* /vt/ **1** to pray to, invoke. *bi-yidʕi (l-) rabb-i-na* he prays to God. **2** to invite. *daʕuu-ni ɣaʕaʃa* they invited me to dinner. *fi-farḥ-u-hum mansiyyiin wi-f-hamm-u-hum madʕiyyiin* (we're) forgotten at their feasts, but invited for their troubles. - vn *duʕa, daʕa, daʕw*; ava *daaʕi*; pva *madʕi*.
¶ *daʕa (rabb-i-na) li-* to pray for, invoke blessings upon (s.o.), as in *ʃumm-i b-tidʕii-li ɣaʃaan ʃangaḥ fil-imtiḥaan* my mother is praying for me to pass my exam. *- daʕa (rabb-i-na) ɣala* to curse, invoke curses upon.
يدعى yudʕa↑ /vi/ to be called, be named. *ṣaḥib-na ḥseen dayman yudʕa siḥs* our friend Hussein is always called *siḥs*.
دعا، دعاء duʕa /n pl ʃadʕiya↑/ prayer, invocation (of God's blessing).
دعا daʕa[2] /n/ invocation (of God's wrath).
داعى dáaʕi /n/ **1** /pl *dawaaʕi*/ motive, incentive. *ʃeeh id-daaʕi ʃinnak ɣamalt[i] kida* what made you do that? *bi-yiʃraḥ id-dawaaʕi wil-ʃasbaab* he explains the motives and reasons (behind s.th.). ‖*ma-fii-ʃ daaʕi* there's no call, there's no need, as in *ma-fii-ʃ daaʕi lik-kalaam da* there's no call to talk that way. **2** /pl *-yiin*/ inviter, host.
مدعى madʕi /n pl *madaaʕi*/ invitee, guest.
المدعو ʔil-madʕu /n/ *[leg]* the one whose name is (a term used by process servers). *saʔalna l-madʕu ɣali* we questioned the one whose name is Ali.
دعوة daʕwa[1] /n pl *-aat*/ **1a** prayer, invocation. ‖*daʕwit-u ma-tinzil-ʃ il-ʔarḍ* he is a pious man. **1b** imprecation, curse. **2** invitation. *taʒkarit daʕwa* invitation card.
دعوى daʕwa[2] /n pl *daʕaawi*/ **1** lawsuit. *rafaʕ daʕwa ɣalayya* he brought a suit against me. ‖*ma-liuu-ʃ (ma-lhaa-ʃ* etc.) *daʕwa (bi-)* he (she etc.) has no right to interfere (in), as in *ma-lak-ʃ[i] daʕwa biyya* you have nothing to do with me, my affairs are none of your business. **2** proselytization.
أدعى ʔadʕa /el/ more/most conducive.
دعاية diɣaaya /n pl *-aat*/ publicity, propaganda. *kull[i] ṭaalib bi-yiʕmil diɣaaya l-nafs-u* each student campaigns for himself.
اتدعى ʔitdaʕa or ʔiddaʕa[1] /vi/ **1** to be invited. **2** to be invoked (of a blessing or curse). *yaama ddaʕit-lu daʕawaat min waldee* he received numerous blessings through the prayers of his parents. - /impersonally/ *min ʔaʕmaal-u s-sayyiʔa ddaʕa ɣalee kitiir* everyone cursed him for his bad behaviour. - iva *mitdiʕi*.
اندعى ʔindaʕa = ʔitdaʕa. - iva *mindiʕi*.
مدّعى midaʕʕi /n */ one who directs the prayers of pilgrims at Mecca.
تداعى tadaaʕi↑ /n/ correlation, association. *ʔit-tadaaʕi l-ḥurr* (or *l-muṭlaq*) free association.
متداعى mutadaaʕi↑ /adj/ dilapidated, on the point of collapse.
ادّعى ʔiddaʕa /vt/ **1** to claim, assert. *dayman bi-tiddiʕi k-karam* she always claims to be generous. *ʔiddaʕa ʔinnu duktuur* he claimed to be a doctor. **2** to pray to God (for s.o.), invoke the blessings of God (upon s.o.).

kull-i-na b-niddiɛii-lu (rabb-i-na) yirgaɛ bis-salaama we all pray for him to come back safe. — /vi/ **3** to bring a lawsuit (against s.o.). *ḥ-addaɛi ɛaf-ʃirka bil-ḥaqq il-madani* I'll sue the company for compensation. - vn *ʃiddiɛaaʃ*; ava *muddaɛi, middiɛi*; pva *muddaɛa*.

مدّعى *muddaɛi*↑ /n */ *[leg]* plaintiff, prosecutor. *ʃil-muddaɛi l-ɛaamm* the public prosecutor. ‖ *ʃil-muddaɛi l-ɛaamm il-iʃtiraaki* government official with Cabinet rank charged with prosecuting crimes involving exploitation of the people.

مدّعى *muddaɛa: muddaɛa ɛalee [leg]* defendant.

استدعى *ʃistadɛa (yistadɛi)* /vt/ **1** to summon. *ʃil-maḥkama b-tistadɛi f-fuhuud* the court summons the witnesses. - /the literary passive form frequently occurs/ *ʈiliɛ ridiif wi-yustadɛa f-ḥaalit iṭ-ʈawaariʃ* he's become a reservist and will be called up in case of emergency. **2** to require, demand, necessitate. *da ma-yistadɛii-ʃ kull id-dawʃa di* that's not worth all this commotion. - vn *ʃistidɛaaʃ*; ava *mistadɛi*.

د غ د غ

دغدغ *daɤdaɤ, daɤdaɤ* /vt/ **1** to batter. *ḥ-adaɤdaɤ-u min iḍ-ḍarb* I'll beat the daylights out of him. **2** to crunch (with the teeth). *miʃ kalit il-ḥamaama bass - di daɤdaɤit il-ɛaḍmʿ kamaan* she not only ate the pigeon, she crunched up the bones as well. - vn *daɤdaɤa*; ava/pva *midaɤdaɤ*.

اتدغدغ *ʃitdaɤdaɤ* or *ʃiddaɤdaɤ* /vi/ **1** to be battered. **2** to be crunched. - iva *mitdaɤdaɤ*.

د غ ر

دغر *daɤar (u)* **1** /vt/ to force, cram, thrust (s.th. into s.th.). *daɤarit ṣubaɛ-ha f-ḥanak il-ɛayyil ɛaʃaan tiṭallaɛ il-xaraza* she forced her finger into the child's mouth to get out the bead. **2** /vi/ to burst in (on s.o.), rush (upon s.o.). *miraat-u daɤarit ɛalee huwwa w-ɛaʃiqt-u* his wife burst in on him and his mistress. - ava *daaɤir*.

د غ ر ى

دوغرى *duɤri* <T *doğru*> /adv/ **1** immediately, right away. *ʈarad-ni duɤri* he threw me out right away. **2** straight on. *xallii-k maaʃi duɤri l-ɤaayit ma tiwṣal* walk straight on till you get there. **3** in a straightforward fashion. *ʃana ʈuul ɛumr-i maaʃi duɤri* all my life I've behaved properly. - /adj invar/ **4** straightforward, sincere. *raagil duɤri* a straightforward man, an undesigning man. *ʃana ṣariiḥ maɛaak wi-duɤri* I'm being frank and open with you. **5** straight. *misallaat duɤri* straight darning-needles.

د غ ش

دغشة *daɤʃa*↑ /n/ dusk. *fi-daɤʃit il-misa* at dusk.

دغيشة *duɤɤeeʃa* /n/ dusk. *gum fi-duɤɤeeʃit il-maɤribiyya* they came at dusk.

دغّش *daɤɤaʃ* **1** /vt/ to blur, bedim. **2** /vi/ to become dim or blurred. - also *daɤʃiʃ*. - vn *tadɤiiʃ*; ava/pva *midaɤɤaʃ*.

د غ ش ش

دغشش *daɤʃiʃ* **1** /vt/ to blur, bedim. *ʃin-nada daɤʃiʃ il-barabriiz* the dew blurred the windscreen. **2** /vi/ to become dim or blurred. *naẓar-u mdaɤʃiʃ* his sight has dimmed. - also *daɤɤaʃ*. - vn *daɤʃaʃa*; ava/pva *midaɤʃiʃ*.

دغشيشة *duɤʃeeʃa* /n pl *-aat, daɤaʃiif*/ dusk. *gaa-ni f-duɤʃeefit il-maɤribiyya* he came for me at dusk.

اتدغشش *ʃitdaɤʃiʃ* or *ʃiddaɤʃiʃ* /vi/ to become dim or blurred. - ava *mitdaɤʃiʃ*.

د غ غ

دغّ *daɤɤ (u)* /vt/ to break into fragments, smash, shatter. *daɤɤ il-ẓizaaz* he smashed the windowpane. ‖ *daɤɤ-u ɛalẓa* he gave him a good beating. - vn *daɤɤ, daɤaɤaan*; ava *daaɤiɤ*; pva *madɤuuɤ*.

اتدغّ *ʃitdaɤɤ* or *ʃiddaɤɤ* /vi/ to be smashed, be shattered. - iva *mitdaɤɤ*.

د غ ف

دغفّ *duɤuff* /n pl *-aat*/ oaf, dolt.

د غ م

دغم *daɤam (i)* /vt/ **1** to incorporate, combine. *ʃidɤim il-mawḍuɛeen fi-maqaala waḥda* combine both topics in a single article. **2** *[gram]* to assimilate, contract (a sound). **3** to jumble, run together. *bi-yidɤim kalaam-u f-baɛḍ* he runs his words together. *ʃafkaar-u madɤuuma* his thoughts are muddled. - vn *daɤm*; ava *daaɤim*; pva *madɤuum*.

اتدغم *ʃitdaɤam* or *ʃiddaɤam* /vi/ **1** to be incorporated. **2** *[gram]* to be assimilated. **3** to be jumbled. - iva *mitdiɤim*.

اندغم *ʃindaɤam* = *ʃitdaɤam*. - iva *mindiɤim*.

أدغم *ʔadɤam*↑ /vt/ *[gram]* to assimilate. - vn *ʃidɤaam*; pva *madɤam*.

د غ م س

دغمس *daɤmis* /vt/ **1** to dim. **2** *[coarse]* to copulate with, lay. — /vi/ **3** to grow dim. **4** to become glum, feel at a low ebb. **5** to get up to no good. - vn *daɤmasa*; ava *midaɤmis*.

اتدغمس *ʃitdaɤmis* or *ʃiddaɤmis* /vi/ passive of *daɤmis* 1. - iva *mitdaɤmis*.

د غ ن

دغن *daɣan (i)* /vt/ *[slang]* to stuff (s.o., especially with food). - vn *daɣn*; ava *daaɣin*; pva *madɣuun*.

دغنة *daɣna* /n pl *-aat*/ instance noun of *daɣn*. *ḫittit daɣna* a great feed.

اندغن *ʔindaɣan* /vi/ to stuffed (especially with food). - iva *mindiɣin*.

د غ و ش

دغوش *daɣwiʃ* **1** /vt/ **1a** to dim. *daɣwiʃ il-lamba* turn down the lamp. **1b** to blur (the vision). *ʔil-ɢaṭra daɣwiʃit ɛeen-i* the eye-drops blurred my vision. **2** /vi/ to grow dim. - vn *daɣwaʃa*; ava/pva *midaɣwiʃ*.

دغوشة *daɣwaʃa* /n/ dimness, blurred-ness.

دغويشة *duɣweeʃa* /n/ dusk.

اتدغوش *ʔitdaɣwiʃ* or *ʔiddaɣwiʃ* /vi/ passive of *daɣwiʃ*. - iva *mitdaɣwiʃ*.

د ف ء see د ف ى

د ف ت ر

دفتر *daftar* /n pl *dafaatir*/ **1** ruled note-book, exercise book, ledger, register. *daftar mabiɣaat* sales ledger. *daftar ḫuḍuur* signing-in book. *daftar gard* inventory record book. *daftar murattabaat* pay-roll. *daftar ʃikaat* cheque book. *daftar tilifoon* telephone directory. ‖ *daftar il-ʕustaaz* the master ledger. - *daftar ṣanf* record book kept on the turnover of specific articles. - *daftar yomiyya ʕamrikaani* daily account book with pages stamped and registered. - *daftar bafra* packet of cigarette papers. - *ɛaɢl-u daftar* ≈ he has a sharp memory. **2** pamphlet, leaflet. *daftar it-taɛliim* instruction booklet.

دفتردار *diftirdaar* /n/ *[obsol]* former title of the Minister of Finance.

دفترخانة *daftarxaana* /n pl *-aat*/ archive.

د ف ت ر ى

دفتيريا *diftirya* <Engl> /n/ diphtheria.

د ف ت ى ر see د ف ى ت - *divateer*

د ف د ف

دفدف *dafdif* /vi/ **1** to flutter, flap, palpitate. **2** to be (over-)anxious, be (too) eager. - vn *dafdafa*; ava *midafdif*.

اتدفدف *ʔitdafdif* or *ʔiddafdif* = *dafdif*. - ava *mitdafdif*.

(د ف ر)

دفر *dafar* /n/ inflammation of the eyes (in cattle).

دفرة *difra* /n pl *-aat, difar*/ wire modelling-tool used for working clay or wax.

د ف ر ن -

دفرنسيل *difransil* <Fr> /n/ *[auto]* differential gear.

د ف س

دفس *dafas (i)* /vt/ **1** to stuff, cram. *dafast^{i} nafs-i f-zaḥmit il-ʃutubiis* I forced myself into the crowd on the bus. *ʔil-huduum madfuusa fiʃ-fanṭa* the clothes are crammed into the suitcase. ‖ *ʔinta dayman bi-tidfis manaxiir-ak* (or *buuz-ak) fi-kull^{a} ḫaaga* you're always sticking your nose into everything. - *ḫ-adfis raas-ak fiṭ-ṭiin* ≈ I'll murder you! **2** to tuck away, put right inside. *dafas maḥfaẓt-i f-geeb-u* he tucked my wallet away in his pocket. *dafas (nafs-u) taḥt il-liḥaaf* he burrowed under the quilt. ‖ *dafas iṭ-ṭabaq kull-u f-kirʃ-u* he knocked back the whole meal. - vn *dafs, dafasaan*; ava *daafis*; pva *madfuus*.

مدفوس *madfuus* /n/ dish of pigeons baked with rice and milk.

اتدفس *ʔitdafas* or *ʔiddafas* /vi/ **1** to be forced, be crammed (into s.th.). **2** to force oneself (into, e.g., a crowd). *ʔiddafast^{i} fiz-zaḥma* I forced myself into the crowd. - ava/iva *mitdifis*.

اندفس *ʔindafas* = *ʔitdafas*. - ava/iva *mindifis*.

دفّس *daffis* = *dafas*. - vn *tadfiis*; ava/pva *midaffis*.

مدفّس *midaffis* /adj/ firm, compact.

اتدفّس *ʔitdaffis* or *ʔiddaffis* = *ʔitdafas*. - ava/iva *mitdaffis*.

د ف ع

دفع *dafaɛ (a)* /vt/ **1** to pay (a sum) for (s.th.). *dafaɛt^{i} ʔitneen gineeh banziin* I paid two pounds for petrol. *ḫa-yidfaɛ il-ɛilaag* he'll pay for the treatment. *ma-dafaɛuu-ʃ il-ʕugra* they didn't pay the fare. *dafaɛt^{i} fiiha ʕalf^{i} gneeh* I paid a thousand pounds for it. **2** *[mech]* to push, drive. *ʔil-mayya b-tidfaɛ sadlit il-balf^{i} fi-ttigaah waaḥid* the water pushes the valve flap in one direction. *ɢuwwit id-dafɛ* momentum. **3** to repel, drive away. *ma-ḫadd^{i}-ʃ yiɢdar yidfaɛ il-ɢaḍa* no one can avoid his fate. ‖ *ʔidfaɛ bi-llati hiyya ʕaḥsan* overcome evil with good. — /vi/ **4** to protest. *ʔil-muḥaami dafaɛ bi-ɛadam ixtiṣaṣ il-maḥkama* the lawyer protested the court's lack of jurisdiction. - vn *dafɛ*; ava *daafiɛ*; pva *madfuuɛ*.

دفع *dafɛ* /n pl *dufuuɛ*/ *[leg]* protest.

دفعة *dafɛa* /n/ **1** /no pl/ forceful impetus, thrust, drive. ‖ *raagil ɛandu dafɛa* (1) a very energetic man. (2) a

hot-tempered man. **2** /pl *-aat/* payment.

دافع *daafiɛ*[1] /n pl *dawaafiɛ/* incentive, motive.

دفعة *dufɛa* /n/ **1** / pl *-aat, dufaɛ/* batch, part of a larger quantity. *dufɛa min il-biḍaaɛa* one batch of the goods. *ʔitxarragt*[i] *maɛaa fi-dufɛit tamanya w-sittiin* I graduated with him in the class of '68. *dufɛit raṣṣaaṣ* burst of machine-gun fire. *ʔid-damm*[i] *b-yinzil dufɛaat wara baɛḍ* the blood is flowing in spurts. ‖ *dufɛa waḥda* all at once, in one lot. **2** /inst n, pl *-aat/* (single) payment. **3** /pl *dufaɛ/* nickname for a private in the army.

مدفع *madfaɛ* /n pl *madaafiɛ/* **1** cannon, gun. *madfaɛ raṣṣaaṣ* machine-gun. ‖ *fi-wiṣṣ il-madfaɛ* in the line of fire (for criticism etc.). - *madfaɛ is-suḥuur* Ramadan cannon awakening people for the nocturnal meal. - *madfaɛ il-ʔimsaak* Ramadan cannon signalling the time for ending the nocturnal meal. - *madfaɛ ir-rafɛ* Ramadan cannon signalling the beginning of the fast. - *madfaɛ il-fiṭaar* Ramadan cannon signalling the end of the fast. - *ḍarab madfaɛ* to fart, let rip. - *ʔil-ɛarabiyya b-tiɛmil madaafiɛ* the car backfires. **2** butane torch (for welding). **3** bolster-shaped cushion (for a sofa etc.). **4** folk preparation eaten by men to enhance sexual powers. *laḥas-lu madfaɛeen* he took two doses of aphrodisiac.

مدفعيّة *madfaɛiyya* /n/ artillery. *madfaɛiyya mḍaadda liṭ-ṭayyaraat* anti-aircraft artillery. *silaaḥ il-madfaɛiyya* the Artillery Corps.

مدفعجى *madfaɛgi* /n pl *-yya/* gunner.

اتدفع *ʔitdafaɛ* or *ʔiddafaɛ* = *ʔindafaɛ* 1 and 2.

اندفع *ʔindafaɛ* /vi/ **1** to be paid. **2** *[mech]* to be pushed, be driven, have momentum. **3** to act impulsively. - vn *ʔindifaaɛ*; ava/iva *mindifiɛ, mundafiɛ*↑.

اندفاع *ʔindifaaɛ*↑ /n pl *-aat/* **1** outburst, outbreak. **2** rashness, impetuosity.

اندفاعة *ʔindifaaɛa* /inst n, pl *-aat/* a sudden outburst.

اندفاعى *ʔindifaaɛi*↑ /adj */ impulsive.

مندفع *mundafiɛ* /adj */ rash, impetuous, imprudent.

دافع *daafiɛ*[2] /vi/ to put up a defence. *laazim nidaafiɛ ɛan nafs-i-na* we must defend ourselves. - vn *midafɛa, difaaɛ*; ava *midaafiɛ*.

دفاع *difaaɛ* /n pl *-aat/* defence. *difaɛaat ḥawaleen il-mawqiɛ* defences around the position. *ʔid-difaaɛ il-madani* civil defence.

دفاعى *difaaɛi* /adj/ defensive. *ʔiṭ-ṭuruq id-difaɛiyya* defensive tactics.

اتدافع *ʔitdaafiɛ* or *ʔiddaafiɛ* /vi/ **1** (impersonal) passive of *daafiɛ*[2]. *ʔif-faraf laazim yitdaafiɛ ɛannu* one's honour should be defended. **2** to push one another. *nizilna nitdaafiɛ mil-ʔutubiis* we pushed each other out of the bus. - vn *tadaafuɛ*↑; ava/iva *mitdaafiɛ*.

د ف ف [1]

دفّ ***daff***[1] ***(i)*** /vt/ to remove, throw aside. *diff-u bɛiid* take it right away! - vn *daff, dafafaan*; ava *daafif*; pva *madfuuf*.

اتدفّ *ʔitdaff* or *ʔiddaff* /vi/ to be removed, be thrown aside. - iva *mitdaff*.

اندفّ *ʔindaff* = *ʔitdaff*. - iva *mindaff*.

د ف ف ([2])

دفّ ***daff***[2], ***duff*** /n pl *dufuuf/* tambourine, larger than the *riqq*, with a small wooden edge around the head, so it can be twirled around the player's finger.

دفّ *daff*[3] /n/ *[Chr]* small cymbals used to accompany liturgical singing.

دفّة *daffa*[1] /n pl *-aat, difaf/* helm, rudder and tiller. *ɛamuud daffa* rudder stock. ‖ *dawwar id-daffa* to change the subject. - *ʔinta ɣalabt id-daffa ɛalayya* now you're turning against me! - *min id-daffa lif-fabuura* ≈ one and all, without exception.

د ف ق

دفق ***dafaq*** ***(u)*** **1** /vt/ to pour out. *ɛala mahl-ak ma-tudfuq-f il-mayya kida* go easy, don't pour the water out that way! **2** /vi/ to gush, spurt. *ʔid-damm*[i] *dafaq min zoor-u* the blood gushed out of his mouth. - vn *dafq, dafaqaan*; ava *daafiq*; pva *madfuuq*.

اتدفق *ʔitdafaq* or *iddafaq* /vi/ to be poured out. - iva *mitdifiq*.

اندفق *ʔindafaq* = *ʔitdafaq*. - iva *mindifiq*.

دفّق *daffaq* **1** /vt/ **1a** to cause to gush or spurt. **1b** to pour repeatedly. **2** /vi/ to gush or spurt repeatedly. - vn *tadfiiq*; ava/pva *midaffaq*.

اتدفّق *ʔitdaffaq* or *ʔiddaffaq* /vi/ to pour forth, gush forth. *ʔil-mayya b-tiddaffaq mil-ḥanafiyya* water is pouring out of the tap. - ava *mitdaffaq*.

د ف ن

دفن ***dafan*** ***(i)*** /vt/ to bury, entomb. *dafannaa wi-xadna l-xaaṭir* we buried him and paid our condolences. ‖ *dafniin-u sawa* ≈ (don't give me that,) we both know the real story. - *maḥbas dafn* a tap/ faucet all of whose adjoining pipes are concealed in the wall. - vn *dafn*; ava *daafin*; pva *madfuun*.

دفنة *dafna* /inst n, pl *-aat/* a burial. *ḥaḍart id-dafna ʔimbaariḥ* I attended the burial yesterday. *ɛilaag ir-rumatizm*[i] *bid-dafna fir-raml* treating rheumatism by burying the patient up to his neck in sand.

دفّان *daffaan* /n/ horned viper.

مدفن *madfan* /n pl *madaafin/* **1** cemetery. **2** tomb.

اتدفن ʔitdafan or ʔiddafan /vi/ to be buried, be entombed. - iva *mitdifin*.
اندفن ʔindafan = ʔitdafan. ‖ *ʔindafan bil-ħaya* his life turned out badly for him. - iva *mindifin*.
دفّن *daffin* **1** /vt/ to bury, conceal (with effort). **2** /vi/ to harbour resentment, store up ill will. *qaʕad yidaffin-lu l-ħadd*^{i} *ma xad bi-taar-u* he went on harbouring resentment against him until he got his revenge. - vn *tadfiin*; ava/pva *midaffin*.

د ف ن ا ر

دفنار *difnaar* /n/ *[Chr]* book of the lives of saints written in verse and sung on saints' days in the morning service.

د ف و ه

دفوه *difooh* <Fr *défaut*> /n pl *-aat*/ defect.

د ف ي

دفى *difi (a)* /vi/ **1** to become warm, warm up. *riglee difyit* his feet warmed up. **2** to acquire money, become wealthy. - vn *dafa, dafayaan*.
دفء *dafa* /n/ warmth, cosiness. *taʕaala ʔuqʕud fid-dafa* come and sit in the warm! *ʔid-dafa ʕafa wil-bard*^{i} *laħħaas il-qafa [prov]* ≈ how nice it is to be cosy when it's cold outside.
دفيان *dafyaan* /adj */ **1** warm (of people and animals). **2** well-off, loaded (with money).
دافى *daafi* /adj/ warm. *ʔin-nahar-da daafi* its warm today. ‖ *gism-u daafi* he has a (slight) temperature.
دفّاية *daffaaya* /n pl *-aat*/ heater, any device (such as a brazier, fireplace etc.) the purpose of which is the provision of heat.
دفّيّة *diffiyya* /n pl *dafaafi, diffiyyaat*/ *[rur]* woollen cloak.
دفّى *daffa*^{2} /vt/ to warm, heat. *ma-ʕanduhum-f*^{i} *huduum tidaffii-hum* they don't have clothes to keep them warm. ‖ *daffa geeb-u* to acquire money, as in *qabl*^{i} *ma titgawwiz laazim tidaffi geeb-ak* before you marry you should have some money. - vn *tadfiyya*; ava/pva *midaffi*.
اتدفّى ʔitdaffa or ʔiddaffa /vi/ to become warm. *ʔiṭ-ṭifl iddaffa taħt il-liħaaf* the child got warm under the quilt. - ava *mitdaffi*.
استدفا، استدفى ʔistadfa /vt/ **1** to consider warm. *bi-tistadfa l-qaʕda hina ʕan hinaak* she feels warmer sitting here than there. **2a** to select for warmth. **2b** to select for wealth. *ʔistadfit ṣaaħib ʔaṭyaan wi-ggawwizit-u* she chose a rich landowner and married him. - ava *mistadfi*.

د ف ي ت

دفيتير *divyateer* (also *divateer*) <Fr *déviateur*> /n/ *[elec]* double two-way switch circuit.

د ق د ق [1]

دقدق *daqdaq* /vt/ **1** to crush, grind by pounding. **2** to nail. **3** to make (s.o.) worldly-wise (of life). *xalli z-zaman yidaqdaq-u ʃwayya* let life teach him a thing or two. — /vi/ **4** to rap, bang. - vn *daqdaqa*; ava/pva *midaqdaq*.
اتدقدق ʔitdaqdaq or ʔiddaqdaq /vi/ passive of *daqdaq*. - iva *mitdaqdaq*.

د ق د ق [2]

دقدق *duqduq* /n pl *daqaadiq*/ *[trad soc, obsol]* form of address or reference to a small child ≈ tiny one.

د ق ر

دقر *daqar (u)* **1** /vt/ to wedge, jam. *ʔudqur il-xaʃaba fii* wedge the piece of wood into it. **2** /vi/ to become wedged or jammed. *ʔil-muxṭaaf daaqir* the anchor is stuck. - vn *daqr*; ava *daaqir, daaqir*; pva *madquur*.
¶ *daqar fi-* (1) to persist stubbornly in. (2) to interfere in.
دقر *diqir* /adj */ **1** persistent, obstinate. **2** interfering, nosey.
دقار *duqaar* /n pl *-aat*/ peg, prop, stake (firmly fixed as a support).
دقّر *daqqar* **1** /vt/ to lean, press, prop, wedge. *daqqaru kutal xaʃab fis-suur il-maayil ʕaʃaan yisnidu* they pressed blocks of wood against the sagging fence to prop it up. **2** /vi/ to rub or press one's body (up against s.o.) for sexual satisfaction. *huwwa bi-yḥibb*^{i} *yirkab fil-ʔutubisaat iz-zaḥma ʕaʃaan yidaqqar fis-sittaat* (or *lis-sittaat*) he likes to ride in crowded buses so that he can rub up against the women. - vn *tadqiir*; ava *midaqqar*.
¶ *daqqar (raas-u) fi-* to persist in.
مدقّراتى *midaqqaraati* /n pl *-yya*/ frotteur, one who rubs up against women in crowds for sexual satisfaction.
اتدقّر ʔitdaqqar or ʔiddaqqar /vi/ to intervene, interfere. ‖ *qul-lu ybaṭṭal yitdaqqar fi-lli ma-luu-f fii* ≈ tell him to mind his own business! - ava *mitdaqqar*.
داقر *daaqir* /vi/ to persist (unsuccessfully), be tenacious. *leeh tidaaqir fi-lli ma-tiqdar-f*^{i} *ʕalee* why persist in doing what you're incapable of? - vn *midaqra*; ava *midaaqir*.
اتداقر ʔitdaaqir or ʔiddaaqir = ʔitdaqqar. - ava *mitdaaqir*.

د ق ش م

دقشم *duqʃum* /n pl *daqaaʃim*/ goldsmith's weight.

د ق ش و م

دقشوم *daqʃuum* /coll n/ crushed limestone (used in cement mix), packing stone.

دقشومة *daqʃuuma* /n pl *-aat*/ cudgel.

د ق ق

دق *daqq (u)* /vt/ **1a** to pound. *qult[i] lig-gazzaar yiduqq-i-li l-laḥma* I told the butcher to pound the meat for me. ‖*daqq il-ḥamm[i] w-naxal-u* ≈ he lived in constant misery. - *daqqeet-u ɛalqa suxna* I gave him a good thrashing. **1b** to hammer in, drive in. *kull[i] ɛaʃart imtaar ḥa-nduqq[a] ɛalaama fil-ʃarḍ* we'll drive a marker into the ground every ten metres. ‖*maṭraḥ ma tirsi duqq-i-lha [prov]* (wherever your ship comes to rest, drop anchor) ≈ let fate carry you along. **2** to nail. *ʃig-gazmagi daqq-i-li k-kaɛb[i] b-xamsa saar* the cobbler nailed the heel for me for five piastres. **3** to bang on, knock on, sound. *ʃilli ɛaayiz yixuff[i] yduqq il-baab il-ʃawwil* anyone who wants to come in should knock on the door first. *raaḥ daaqiq ig-garas qabl il-ḥiṣṣa ma tintihi* he rang the bell before the class was over. ‖*ʃaxuu-ya daqq-i-li tilifoon ʃimbaariḥ* my brother called me by phone yesterday. - *daqqit-lu tilliɣraaf* she sent him a cable. - *ɛamalna-lhum daqq[i] fils* ≈ we picked them up by the arms and legs and banged their behinds together. - *ya dahya duqqi* oh no! now we're in for it! - *daqq[i] daqqa* to pull a fast one. - *ḥa-nduqq[i] daqqa farayḥi* we'll strike up a happy tune. **4** to tattoo (a design). *niduqq[i] wi-nṭaahir wi-nfuuf il-baxt* (gypsy street-call) we tattoo, do circumcisions and tell fortunes! ‖*daqq iṣ-ṣaliib [Chr]* tattooing of the cross (on the inner side of the wrist - a Coptic custom). - *da daaqiq iṣ-ṣaliib [derog]* (said by one Muslim of another) he's ruthless, he's without mercy. - *bitaaɛ id-daqq* tattooist. - *huwwa-na daaqiq ɛaṣafiir* ≈ do you think I'm simple? **5** to stipple (paint). — /vi/ **6a** to beat, pound, hammer. *ʃig-giraan bi-yduqqu ɛal-ḥeeṭa* the neighbours are banging on the wall. *maʃyiin fiʃ-ʃaariɛ yiduqqu ɛala d-dufuuf* they're walking in the street beating on tambourines. **6b** to beat, sound. *ma-smiɛt[i]-ʃ il-baab bi-yduqq* didn't you hear a knock at the door? *kaan qalb-i bi-yduqq[i] gaamid* my heart was pounding. *ʃit-tilifoon daqq* the phone rang. *ʃis-saaɛa daqqit tamanya* the clock struck eight. ‖*duqqi ya mazziika* (1) (said to a band) play up! (2) hurrah! - *yaama daqqit ɛala r-raas ṭubuul [prov]* ≈ I've seen it all. **7** to take hold, become established. *nirwi ʃ-ʃatlaat ɛaʃaan tiduqq[i] fil-ʃarḍ* we water the seedlings so that they may take root in the ground. *xinaaqa kbiira qawi daqqit* a huge quarrel broke out. ‖*daqq[i] fiyya* he came and started a quarrel with me. **8** to fuss or fret over details or trivial things. *ʃilli yduqq[i] yitɛab [prov]* worrying over little things just wears you out. *ma-tduqq[i]-ʃ* don't make a fuss (over it). *ḥa-tduqq[a] ɛala kalaam in-naas* are you going to fret over what people say? ‖*daqqeet ɛalee ma-yinsaa-ʃ miɛad-na* I stressed to him that he must not forget our appointment. - vn *daqq, daqqa, daqaqaan*; ava *daaqiq*; pva *madquuq*.

دقّة *daqqa* /n/ **1** /inst n, pl *-aat*/ a (single) beat, blow, knock. *daqqaat il-qalb* heartbeats. *raqaṣit ɛala daqqaat iṭ-ṭubuul* she danced to the beats of the drums. ‖*daqqa b-daqqa* blow for blow, tit for tat. **2** specific rhythm (determined by the melody in question) to which a patient dances in the *zaar*. ‖*di daqqa w-di daqqa* (that is one beat and this is another) this case is different from the previous one. - *bi-timʃi ɛala daqqa w-nuṣṣ* she sways her hips when she walks. - *di baqit daqqa qadiima* that's old-fashioned. **3** condiment of hot red pepper, oil, vinegar, salt and water used to season *fuul* or *kuʃari*.

دقّة *duqqa* /n/ condiment consisting of salt and pounded spices (usually cumin, coriander and sesame). ‖*faqiir duqqa* very poor.

دقّة *diqqa, diqqaʔ* /n/ precision, accuracy. *bi-diqqa* accurately. ‖*diqqit naẓar* insight, perception.

دقّى *diqqi* /adj */ precise, accurate. *kaan diqqi f-fuxl-u* he was accurate in his work. ‖*naggaar diqqi* a joiner.

دقّيّة *diqqiyya* /n/ **1** /no pl/ exactness. **2** /pl *daqaaqi*/ small cooking-pot.

أدقّ *ʔadaqq* /el/ more/most accurate, or precise.

دقاق *duqaaq* /n/ powder. *duqaaq it-tirmis* lupin flour.

دقيق *daqiiq* /adj */ **1** accurate, precise. *ʃalaat daqiiqa* precision instruments, precision tools. **2** delicate, fine. *ʃis-saɛatiyya fuxl-u-hum daqiiq* watchmakers' work is delicate. ‖*ʃil-ʃamɛaaʃ id-daqiiqa* the small intestine.

دقيق *diqiiq* /n/ flour. *diqiiq fiinu* fine white flour (used for making western-type bread). *diqiiq ɛalaama* top quality flour. *diqiiq sinn* bran. ‖*diqiiq is-simiiṭ* semolina. - *diqiiq iṭ-ṭalɛ* pollen (particularly pollen of the male palm flower). - *ʃabu dqiiq* butterfly, moth. - *(yibqa) zet-na fi-dqiq-na* we'll keep it all in the family, as in *nigawwiz il-bint[i] li-bn[a] ɛamm-a-ha w-yibqa zet-na fi-dqiq-na* we'll marry our daughter to her cousin and keep it all within the family.

دقيقة *diqiiqa* /n pl *daqaayiq*/ minute. *ɛaqrab id-daqaayiq* minute hand (of a clock or watch).

دقّاق *daqqaaq* **1** /n */ **1a** one who grinds spices for sale. **1b** one who grinds ingredients for *taʕmiyya*. **2** /n pl *-aat*/ pile-driver.
مدق *midaqq, madaqq* /n pl *-aat*/ **1** track, footpath. **2** wooden pestle. **3** type of mallet used in ornamental wood-working. **4** rammer.
مدقّة *midaqqa* = *midaqq* 2 and 3.
اتدق *ʔitdaqq* or *ʔiddaqq* /vi/ passive of *daqq*. - iva *mitdaqq*.
اندق *ʔindaqq* = *ʔitdaqq*. - iva *mindaqq*.
دقّق *daqqaq* /vi/ **1** to go into detail, be precise. *bi-ydaqqaq fil-mawduuʕ* he leaves no detail of the subject undiscussed. *bi-ydaqqaq fi-ʃuɣl-u* he does his work accurately. **2** to be meticulous, be particular. *ma-tdaqqaq-ʃ*^{i} *kida* don't be so fussy. *bi-ydaqqaq ʕal-qirʃ*^{i} *wil-malliim* he's a penny-pincher. *ʔil-mudiir daqqaq maʕaahum fil-mawaʕiid* the director was particular about their being on time. **3** to scrutinize, look carefully. *daqqaqi f-mayyit ik-kubbaaya ḫa-tlaqii-ha miʃ niḍiifa* look closely at the water in the glass and you'll find it's not clean. - vn *tadqiiq*; ava *midaqqaq*.
استدق *ʔistadaqq* /vt/ to consider (e.g., workmanship) fine and delicate. - ava *mistidaqq*.
مستدق *mustadaqq* /adj/ conical.

د ق ق ى

الدقى *ʔid-duqqi* /prop n/ residential area in Guiza.

د ق ل ج

دقلج *daqlig* /vt/ to roll. *daqlig il-barmiil ʕar-raṣiif* he rolled the barrel onto the wharf. - vn *daqlaga*; ava/pva *midaqlig*.
اتدقلج *ʔitdaqlig* or *ʔiddaqlig* /vi/ to roll or be rolled. - ava/iva *mitdaqlig*.

د ق م

دقمة *duqma* (also *dumqa*) <T *tokmak*> /n pl *-aat*/ **1** small wooden mallet. **2** cudgel.

د ق م ا ق

دقماق *duqmaaq* <T *tokmak*> /n pl *daqamiiq*/ wooden mallet.
دقماقة *duqmaaqa* = *duqmaaq*.

د ق ن

دقن، ذقن *daqn* /fem n, pl *duquun*/ **1** chin. ‖*wiqiʕ li-daqn-u* ≈ he got up to his neck in trouble. **2** beard. *huwwa mrabbi daqn-u* he has a beard. *daqn is-siisi daqn il-faar daqn*^{i} *mḥammad in-naggaar* (or *in-naffaar* or *il-yaffaar*) chant uttered by children in the course of such games as *gabba* (q.v.). ‖*xud-li daqn-i* give me a shave. - *sallim-ha daqn-u* he let himself be led by her. - *ʔalf*^{i} *daqn*^{i} *wala daqn-i* ≈ I'd rather see a thousand killed than get scratched myself. - *diḫk*^{a} *ʕad-duquun* trickery, knavery. - *min daqn-u wi-ftil-lu* (if he wants a rope take hairs from his beard and make it for him) ≈ make him pay for all he gets. - *ʔatiff*^{a} *ʕala daqn-i law ...* or *ʔaḫlaq daqn-i law ...* or *ʔaadi daqn-i law ...* ≈ I'll eat my hat if .... - *waaḫid ʃaayil daqn-u wit-taani taʕbaan leeh* or *waaḫid ʃaayil daqn-u wit-taani* (or *w-inta) zaʕlaan leeh [prov]* ≈ why get upset about other people's concerns? - *daqn il-baaʃa* variety of tree (Albizzia lebbek), so called because of the beard-like appearance of the long stamens of its greenish-white globose flowers. **3** chin rest (of a violin).
دقّانة *daqqaana* /n pl *-aat*/ **1** curb chain (of a bridle). **2** chin rest (of a violin).

د ق ن و

دقنة *daqnu* /n/ style of serving in the game called *xara sinnu* (q.v.).

د ق و س

داقوس *daquus* /n pl *dawaqiis*/ **1** supporting strut within the sound-box of a stringed instrument. **2** *[naut]* transverse timber supporting the half-deck in a Nile sailing boat.

د ك ا ر

دوكار *dukaar* /n pl *-aat*/ *[obsol]* two-wheeled horse-drawn carriage, trap.

د ك ب ا ج

ديكوباج *dikubaaj* <Fr *découpage*> /n/ cinema shooting-script.

د ك ت ر

دكترة *daktara* /n/ *[mech]* thread-cutting.

د ك ت ر ا

دكتوراه *dukturaah* <Fr *doctorat*> /n/ doctorate.

د ك ت و ر

دكتور *duktuur, duktoor, daktuur*↓ <Fr *docteur*> /n, fem *duktuura, duktoora, daktuura*↓, pl *dakatra*/ **1** medical practitioner. *duktuur nafsaani* psychiatrist. *duktuur biṭari* veterinarian. *duktuur ʕiẓaam* orthopaedist. *duktuur ʃasnaan* dentist. *duktuur ʃaʕṣaab* neuro-

logist. **2** one holding a doctorate, doctor. **3** form of address or reference to any of the above or a pharmacist.

د ك د ر –
ديكادراج *dikadraaj* <Fr *décadrage*> /n/ *[cin]* misframing.

د ك د ك
دكدك *dakdik* /vt/ to tamp down, ram, beat or press down, level out (ground, earth, stone etc.). *ʃil-xeel wi-hiyya b-tigri dakdikit il-ʃarḍ* the galloping horses flattened the ground. - vn *dakdaka*; ava/pva *midakdik*.
اتدكدك *ʃitdakdik* or *ʃiddakdik* /vi/ to be beaten down, be flattened out. - iva *mitdakdik*.

د ك ر
ذكر، دكر *dakar* /pl *dukúra, dukuur*/ **1** /adj/ male (animal or plant). *naxl[i] dakar* a male palm. ‖*raagil dakar* a real man. - *mara dakar*↓ (1) a no-nonsense woman. (2) a lesbian assuming the male role. (3) a barren woman. - *ʕaamil dakar* acting (1) the tough guy, (2) the ladies' man. - *muzmaar dakar* a *muzmaar* in the baritone range. - *wadaʕa dakar* large spiky sea-shell used in divination. - *ʃil-ḥaẓẓ id-dakar* bad luck. - *ʃil-faqr id-dakar* extreme poverty. **2** /n/ **2a** person or animal of the male sex. *dakar baṭṭ* a drake. *kalbit-na wildit talat dukuur wi-ntayteen* our dog gave birth to three male and two female pups. **2b** male (plug, joint, mechanical part etc.). *dakar wi-ntaaya* (1) tenon and mortise. (2) hook and eye fastener. **2c** *[metal]* thread-cutting tap.
ذكر *zakar[1]* /n/ **1** /pl *zukuur*/ male. **2** /pl *zukúra*/ penis.
ذكّر، دكّر *dakkar* **1** /vt/ to fertilize (of a male palm tree). **2** /vi/ to cease bearing fruit owing to age (of a plant). - vn *tadkiir*; ava/pva *midakkar*.
مذكّر *muzakkar*↑ /n/ *[gram]* masculine.
اتذكّرت *ʃitdakkarit* or *ʃiddakkarit* /vi/ **1** to be fertilized (of a female palm tree). **2** to become a male (through surgery). - ava/iva *mitdakkara*.
استدكر *ʃistadkar* /vt/ **1** to fertilize artificially, pollinate (especially palm trees). **2** to consider male or masculine. **3** to select for masculinity. — /vi/ **4** to behave in a masculine fashion. *bi-tistadkar ʕaleena* ≈ she bosses us around. - ava *mistadkar*.

د ك ر ي ت
دكريتو *dikriitu* <It *decreto*> /n/ *[obsol]* firman, executive decree.

د ك ش
دكش *dukʃ* /adj invar/ huge and strong.

[1] د ك ك
دكّ *dakk[1]* *(u)* **1** /vt/ to tamp down, pound firm. *bi-ydukku l-xarasaana ʕafaan il-meeda* they tamp down the concrete for the foundation. **2** to stuff, cram. *dakk il-maḥfaẓa f-geeb-u* he stuffed his wallet in his pocket. **3** to flatten, raze. *ʃil-infigaar dakk il-ʕimaara* the explosion flattened the apartment building. **4** to tighten the weave of (cloth). - vn *dakk, dakakaan*; ava *daakik*; pva *madkuuk*.
دكّة *dakka* /n pl *-aat*/ *[constr]* **1** foundation layer of crushed stone. **2** block of pre-cast reinforced concrete.
مدكّ *midakk[1]* /n pl *-aat*/ rammer.
اتدكّ *ʃitdakk* or *ʃiddakk* /vi/ passive of *dakk[1]*. - iva *mitdakk*.

[2] د ك ك
دكّة *dikka[1]* /n pl *-aat, dikak*/ draw-string. - also *tikka*.
مدكّ *midakk[2]* /n pl *-aat*/ rod for inserting a drawstring into a casing.
مدكّة *midakka* = *midakk[2]*.
دكّك *dakkik* /vt/ to thread (cord, wire etc.) in the manner of a drawstring. *tadkiik is-silk[i] f-bakyit iʃ-ʃabaka* passing the wire through the casing of the (tennis) net. - vn *tadkiik*; ava/pva *midakkik*.
اتدكّك *ʃitdakkik* or *ʃiddakkik* /vi/ to be threaded (of, e.g., a drawstring). - iva *mitdakkik*.

[3] (د ك ك)
دكّة *dikka[2]* /n pl *dikak*/ bench.
دكّ *dakk[2]* <Engl>: *ʠumaaʃ dakk* duck (thick cotton cloth).

د ك ل ت –
دكلتيه *dikulteeh* <Fr *décolleté*> **1** /adj invar/ décolleté, low-necked (of a woman's garment). **2** /n pl *-aat*/ neckline of a garment.

د ك م
دكمة *dukma* /n/ *[naut]* boom of a lateen sail.
دكمة *dakama* /n pl *-aat, dakam*/ boom of a crane.
دكّم *dakkim* /vt/ *[constr]* to support, underpin. *ḥaṭṭu ʕimdaan xafab ʕafaan yidakkimu ʃaddit il-xarasaana* they put wooden posts to support the casing of the concrete. - vn *tadkiim*; ava/pva *midakkim*.
اتدكّم *ʃitdakkim* or *ʃiddakkim* /vi/ to be supported, be underpinned. - iva *mitdakkin*.

د ك ن

دكّان *dukkaan* /n pl *dakakiin*/ small shop. *dukkaan ʕaṣiir* a juice shop.

دكّانة *dukkaana* /n pl *dakakiin*/ small shop. *dukkaanit sagaayir* a cigarette shop.

دكاكيني *dakakiini* /adv/ illegally, illicitly. *baqeena niftaɤal dakakiini min ɤeer ruxṣa* we began to work illegally, without a licence.

دكّن *dakkin* /vt and vi/ **1** to conceal, be secretive (about). *ma-tdakkin-ʃ (ʕala) il-mawḍuuʕ wi-ḫkii-li b-surʕa* don't be so secretive about it - tell me quickly! **2** to hoard. *fiḍlit tidakkin (ʕala) il-filuus ṭuul ʕumr-a-ha w-maatit mil-ʃaɤniya* she hoarded money all her life and died a rich woman. **3** to purloin, pilfer. *wi-huwwa xaarig mil-maṭʕam dakkin (ʕala) maʕlaqteen* as he was leaving the restaurant he filched a couple of spoons. - vn *tadkiin*; ava/pva *midakkin*.

اتدكّن *ʔitdakkin* or *ʔiddakkin* /vi/ passive of *dakkin*. - iva *mitdakkin*.

د ك ه see د ا ك: *dukha, dukhat, dukhawwa, dukhawwat, dukhawwan, dikha, dikhat, dikhayya, dikhayyat, dikhayyan, dikhiyya, dikhiyyat, dikhiyyan, dukhum, dukhumma, dukhummat, dukhumman, dukham, dukhamma, dukhammat, dukhammân*

د ك و ر

ديكور *dikoor* <Fr *décor*> /n pl *-aat*/ **1** decor, interior decoration. *ʕaamil dikoor* interior decorator. **2** *[theat]* stage-set. *muhandis dikoor* stage designer.

د ل ا ب

دولاب *dulaab* <P *dol-âb*> /n pl *dawaliib*/ **1** cupboard, wardrobe, cabinet. *dulaab ḫifẓ il-malaffaat* filing cabinet. ‖ *dawaliib maftuuḥa* open shelves. - *dulaab (iʃ-ʃaʕriyya)* implement for making *ʃaʕriyya*. - *dulaab in-nixiil* bolter in a flour mill. **2** any of various wheels (e.g., water-wheel, potter's wheel, watch or clock gear-wheel). **3** short instrumental musical form in one key from four to twelve measures in length.

د ل ت ا

دلتا *dilta* /n/ *[geog]* delta. ‖ *ʔid-dilta* the Nile delta, Lower Egypt.

د ل د ق

دلدق *daldaq* /vt/ to spill. *waddi f-ʃaay l-axuu-k bass[i] ma-tdaldaq-uu-ʃ* take the tea to your brother but don't spill it. - vn *daldaqa*; ava/pva *midaldaq*.

اتدلدق *ʔitdaldaq* or *ʔiddaldaq* /vi/ to be spilt. - iva *mitdaldaq*.

د ل د ل

دلدل *daldil* /vt/ to dangle, hang down. *qaʕad fooq il-ḫeeṭa w-daldil riglee* he sat on the wall and dangled his legs. ‖ *daldil widaan-u* to look dispirited, as in *lamma ʃaafit in-natiiga ṭiliʕit wi-wdan-ha mdaldila* when she saw the results she left in utter dejection. - vn *daldala*; ava *midaldil*.

دلدول *dalduul* /n pl *daladiil*/ minion, one who is submissive or ineffective. *ʔir-raagil da dalduul miraat-u* that man is hen-pecked. *baʕd[i] ma tgawwizt-u laqeet ʔinnu dalduul ʔumm-u* after I married him I found out he was tied to his mother's apron strings.

اتدلدل *ʔitdaldil* or *ʔiddaldil* /vi/ **1** to dangle, hang limply. *ʔil-furuuʕ lamma tidbal bi-titdaldil ʕal-ʔarḍ* when the branches wither they droop to the ground. **2** to lag, fall behind. *ʔil-maḫsubiyya fiʃ-ʃirka xallit-ni ʔaddaldil* favouritism in the company led to my falling behind (in the promotion stakes). - ava *mitdaldil*.

د ل س

دلّس *dallis* /vi/ to act deceitfully or fraudulently, engage in misrepresentation. *bi-ydallisu ʕan-naas fid-diin* they misrepresent religion to the people. - vn *tadliis*; ava *midallis*.

اتدلّس *ʔitdallis* or *ʔiddallis* /vi/ (impersonal) passive of *dallis*. *yaama n-naas itdallis ʕaleehum* how often people have been deceived! - iva *mitdallis*.

د ل ش

دلش *dalaʃ (i)* /vi/ to plunge. *ʔil-baqara dalaʃit fit-tirʕa* the cow plunged into the canal. - vn *dalʃ, dalaʃaan*; ava *daalif*.

د ل ع[1]

دلع *dalaʕ[1]* /n/ **1** pampering, coddling. *da b-sabab dalaʕ ʔahl-u fii* that's because his family spoil him. ‖ *ʔism[i] dalaʕ* pet name. **2** diversion, pastime. *b-afrab sagaayir dalaʕ* I smoke cigarettes just for something to do. *huwwa waaxid ʃuɤl-u dalaʕ* he doesn't take his work seriously. **3** sauciness, coquettishness. ‖ *ya dalaʕ* flirtatious form of address to a pretty female.

دلاعة *dalaaʕa* = *dalaʕ[1]*.

دلّوع *dalluuʕ* /adj/ spoiled, pampered.

دلّوعة *dalluuʕa* /n pl *dalaliiʕ, dalluʕaat*/ spoiled child, darling. *ʔaṣl-u ya siid-i dalluuʕit il-mudiir* well, mate, he happens to be the director's pet. *ʃuft il-waad*

id-dalluuɛa da did you see that spoiled boy?

دلّع *dallaɛ*[1] /vt/ **1** to pet, pamper, spoil. *ɡoz-ha bi-ydallaɛ-ha wi-ygib-laha kull*[a] *ħaaga* her husband pampers her and gets her everything. ‖*ya mdallaɛ* flirtatious form of address to a female ≈ you honey! **2** to give (s.o.) the pet name of. *ʃism-a-ha ʃamal laakin bi-ydallaɛuu-ha miimi* her name is Amal but they call her Mimi as a pet name. - vn *tadliiɛ*; ava/pva *midallaɛ*.

اتدلّع *ʃitdallaɛ* or *ʃiddallaɛ* /vi/ **1** to behave or be treated like a spoiled child. *kibrit wi-lissa b-titdallaɛ* she's grown up but she still behaves like a spoiled child. *bi-titdallaɛ ɛala xaṭib-ha ɡuddaam in-naas* she behaves in a spoiled way with her fiancé in public. **2** to behave frivolously. *ɡaɛad yitdallaɛ fiʃ-ʃuɣl*[i] *w-ṭaraduu* he didn't take his work seriously so they fired him. **3** to act coquettishly. *kull ir-riggaala bi-yħibbuu-ha ɛalaʃaan bit-titdallaɛ* all the men like her because she's a flirt. - ava/iva *mitdallaɛ*.

[2] د ل ع

دلع *dilig*[1] *(a)* /vi/ to become bland or insipid (of food). ‖*ʃin-nifs*[i] *dilɛit* to be nauseated, as in *nifs-i dilɛit min kutr*[i] *ʃurb il-mayya* I felt sick from drinking so much water, *nifs-i dilɛit min ħalyaṭ-u* I felt disgusted at his flattery. - vn *dalaɛaan, dalaaɛa, diluuɛa*.

دلع *dalaɛ*[2] *(i)* /vt/ to make (food) insipid. *ṭabbax-hum itɛawwid yidliɛ il-ʃakl* their cook used to produce insipid food. ‖*dalaɛ in-nifs* to nauseate, as in *ṭabix-ha dalaɛ nifs-i* her cooking made me feel sick, *ṭariiɡit kalaam-u dalaɛit nifs-i* the way he was talking disgusted me. - vn *dalaɛaan, dalaaɛa*.

دلع *diliɛ*[2] /adj */ bland, lacking edge, insipid (of food or people).

دلّع *dallaɛ*[2] /vt/ **1** to nauseate (of food or drink). *ʃakl*[i] *is-sudaani bi-ydallaɛ in-nifs* eating peanuts makes you feel sick. **2** to make (food) less salty. *ʃir-ruzz*[i] *da ħaadiɡ ɡawi - ɛaayiz tadliiɛ* this rice is very salty, it needs to be made less so. - vn *tadliiɛ* ava *midallaɛ*.

ادلّع *ʃidlaɛɛ* /vi/ to become bland or insipid. - ava *midliɛɛ*.

استدلع *ʃistadlaɛ* /vt/ **1** to consider (food) insipid. **2** to consider nauseating. - ava *mistadlaɛ*.

د ل ع د ى see – ء د د ل : *ʃiddalɛaadi*

د ل ف ى ن

دلفين *dulfiin* <Engl> /n pl *-aat*/ dolphin.

د ل ق

دلق *dalaɡ (u)* /vt/ to spill, pour out. *xalli baal-ak laħsan tudluɡ if-faay* be careful not to spill the tea! *ʃudluɡi l-mayya fil-ħood* pour the water into the sink. - vn *dalɡ, dalaɡaan*; ava *daaliɡ*; pva *madluuɡ*.

¶ *dalaɡ (nafs-u* or *rooḥ-u) ɛala* to tag after, latch onto. *ma-bi-yħibb*[a]*-haa-ʃ wi-barḍu dalɡa nafs-a-ha ɛalee* he doesn't like her but still she hangs around him.

مدلوق *madluuɡ* /adj/ loose, flabby, hanging.

دلقة *dalɡa* /n/ tagging (along) after. *baṭṭal dalɡa ɛaleeha* don't be so gone on her!

دلق *dilɡ* /n pl *diluuɡ*/ *[obsol]* woollen cloak.

اتدلق *ʃitdalaɡ* or *ʃiddalaɡ* /vi/ to be poured away, be spilled. - iva *mitdalaɡ*.

¶ *ʃitdalaɡ ɛala* to tag after, latch onto.

اندلق *ʃindalaɡ* = *ʃitdalaɡ*. - iva *mindiliɡ*.

[1] د ل ك

دلك *dalak (i)* /vt/ to rub. *dalak rigl-u* he rubbed his leg. - vn *dalk*; ava *daalik*; pva *madluuk*.

دلكة *dalka* /pl *-aat*/ instance noun of *dalk*. *ɛalee dalka tiffi min ʃawwil marra* he has a way of massaging that cures the first time.

دلّك *dallik* /vt/ to massage, rub. - vn *tadliik*; ava *midallik*.

مدلّكاتى *midallikaati* /n pl *-yya*/ **1** masseur. **2a** homosexual. **2b** one who practises manual masturbation.

اتدلّك *ʃitdallik* or *ʃiddallik* /vi/ to be massaged, be rubbed. - iva *mitdallik*.

[2] د ل ك see د ل ل و ك : *dallooka*

د ل ك ا ت

ديلكات *dilikaat* (also *dilikaah*) <Fr *délicat*> /adj invar/ *[deris]* (over-) refined, genteel.

د ل ك ا ه see د ل ك ا ت : *dilikaah*

[1] د ل ل

دلّ *dall*[1] *(i)* /vt/ to direct, guide. *mumkin tidill-i-ni ɛal-ɛinwaan da* would you direct me to this address? - vn *dall, dalalaan*; ava *daalil*; pva *madluul*.

دلّ *dall*[2] *(u)* /vi/ to stand as proof. *da ydull*[a] *ɛala ʃeeh* what does this prove? - vn *dalaala, dilaala*; ava *daalil*; pva *madluul*.

دلالة *dalaala, dilaala*[1] /n pl *-aat*/ sign, indication, evidence. *dalaala ɛala kida* as evidence of this, as proof of this. *ʃil-ħarb*[i] *laha dalalaat ɡabl*[i] *ma tɡuum* there are signs which precede the outbreak of war.

دلالة *dilaala*[2]*: suuɡ id-dilaala [obsol]* slave-auction

market. ‖ *ʕin ʃa-lla titbaaʒ fi-suuq id-dilaala* ≈ may you go to hell!

مدلول *madluul* /n pl *-aat*/ meaning. *ya tara ʃeeh madluul kalaam-u* I wonder what he means.

دليل *daliil* /n pl *ʃadilla, dalaayil*/ **1** sign, indication, evidence, proof. *da daliil ɛala ʃinn*[a] *ɛaql-u faaḍi* that's proof that he is empty-headed. *daliil qaaṭiɛ* conclusive evidence. *ʃadilla ɛaqliyya* rational proofs. *bi-daliil ʃinn* ... and the proof is that .... ‖ *qul-li baqa da-na ḥtaar daliil-i* I give up, tell me (the answer). - *dalaayil il-xayraat [Isl]* text recited during specified periods of supererogatory prayer. — /pl *dalaayil* only/ **2** guide, manual, directory. *daliil tilifoon* telephone directory. — /no pl/ **3** *[mus]* (*ɛalaamit*) *daliil* key signature.

أدلّ *ʃadall* /el/ more/most indicative. *ma-fii-ʃ ʃadall*[i] *min kida ɛala kidb-u* nothing could show more plainly that he is lying.

دلّال *dallaal* /n * and pl *dallaala*/ broker, auctioneer.

دلّالة *dallaala* /n pl *-aat*/ woman who peddles ladies' goods (kerchiefs etc.) from house to house, and is thereby in a position to spread gossip and family secrets.

دلّل *dallil*[1] /vi/ **1** to hawk, shout the price of goods in a market place, call for bids in an auction. *waaqif yidallil ɛal-quuṭa ma-ḥadd*[i]*-ʃ ɛaayiz yiʃtiri* there he stands hawking tomatoes but no one wants to buy. ‖ *ʃilli ydallil ɛala bḍaɛt-u tibuur [prov]* ≈ he who is over-anxious about something will lose it. **2** to prove, offer proof. *dallil ɛala kull illi qaal-u* he offered proof for all that he said. - vn *tadliil*; ava *midallil*.

استدلّ *ʃistadall* /vi/ **1** to obtain information. *ʃistadalleet ɛala l-ɛinwaan* I found out the address. **2** to use as proof. *ʃinta b-tistadill*[i] *b-kida ɛala ʃeeh* what are you trying to prove with this? **3** to inquire, seek information. *ʃistadalleet ɛaleehum wala ḥadd*[i] *dall-i-ni* I inquired after them but no one could guide me. - vn *ʃistidlaal*; ava *mistidill*.

د ل ل[2]

دلال *dalaal* /n/ coyness, coquetry. *bi-ysuuq id-dalaal* he plays hard to get. ‖ *ma-ɛad-ʃ*[i] *dalaal* the good times are gone. - *liik dalaal ɛalee* do you have any influence (through friendship or affection) with him?

دلّل *dallil*[2] /vt/ to spoil, pamper. - vn *tadliil*; ava *midallil*.

اتدلّل *ʃitdallil* or *ʃiddallil, ʃitdallal* or *ʃiddallal* /vi/ to be coquettish, play hard to get, be evasive. *tuqɛud titdallil ɛala ʃayy*[i] *raagil* she flirts with just anyone. - vn *tadallul* ↑; ava *mitdallil*.

د ل ل و ك

دلّوكة *dallooka, dalluuka: raqṣ id-dallooka* a Sudanese dance. *daqqit id-dallooka* type of music played for a Sudanese dance.

د ل م

دلمة *dalama* /n/ *[coarse]* **1** /pl *-aat*/ tip of the clitoris. ‖ *ʃumm*[i] *dalama* a nymphomaniac. **2** /no pl/ orgasm. *gaab laha d-dalama* or *gaab dalamit-ha* he brought her to orgasm.

د ل م ي ت

دولوميت *dulumiit* <Fr> /n/ dolomite.

د ل و see د ل ى: *dalw, dilw*↑

د ل و ق ت see و ق ت: *dilwaqti*

د ل ى

دلو *dalw, dilw*↑ /n/ **1** bucket. **2** *ʃid-dalw* ،*[astrol]* Aquarius.

دلّاية *dallaaya* /n pl *-aat*/ **1** hanging. **2** pendant.

دوالى *dawaali* /pl n/ *[path]* varicose veins. ‖ *ɛandu dawaali* he suffers from varicoceles.

دلّى *dalla* /vt/ **1** to hang up, suspend. *nidalli n-nagafa f-wisṭ il-ʃooḍa* let's hang the chandelier in the middle of the room. **2** to lower, let down. *dalleena l-gardal fil-biir ɛaʃaan il-mayya* we let the bucket down into the well to get water. — /vi/ **3** to have an erection (of male animals). - vn *tadliyya*; ava *midalli*.

اتدلّى *ʃitdalla* or *ʃiddalla* /vi/ **1** to be hung, be suspended, dangle. **2** to trail behind. *ṭarḥit-ha b-titdalla waraaha fil-ʃarḍ* her head-veil is trailing behind her on the ground. - ava/iva *mitdalli*.

أدلى *ʃadla*↑ /vi/ to speak out. *ʃadla b-ʃaqwaal-u* to testify. ‖ *ʃadla b-ṣoot-u* to cast one's vote. - vn *ʃidlaaʃ*; ava *mudli*.

د ل ى ا

داليا *dalya* <Engl> /n/ dahlia.

د م

دم *dum* <T *düm* from P> /n pl *-aat*/ *[mus]* a strong beat.

د م ا see د م م[1]: *dima*

د م ا ن

دومان *dumaan* (also *ḍamaan*[1]) <T *dümen* from It> /n

pl *-aat/* **1** *[naut]* helm. *mask id-dumaan* steering. **2** regulator lever in a watch.
دومانجي *dumangi* (also *ḍamangi*) /n pl *-yya/* **helmsman.**

د م ج
دمج *damag (i)* /vt/ **1** to amalgamate. *damagu kull[i] ʃarikaat id-duxxaan fi-ʃirka gdiida* they amalgamated all the tobacco companies to form one new company. **2** to alloy. *fil-ɛaada b-yidmigu d-dahab bin-naḥaas* usually they alloy gold with copper. - vn *damg*; ava *daamig*; pva *madmuug*.
اندمج *ʃindamag* /vi/ **1** to be or become amalgamated. **2** to become engrossed, become absorbed. *ʃil-mumassil indamag fid-door* the actor was absorbed in his role. *ʃindamagt[i] fil-ɋiraaya* I was engrossed in reading. - vn *ʃindimaag*; ava/iva *mindimig*.
أدمج *ʃadmag = damag*. - vn *ʃidmaag*.

د م د م
دمدم *damdim* **1** /vt/ to pat down, flatten. **2** /vi/ to mutter. *ɋaɛad yidamdim ɋas-sibḥa* he was mumbling over his worry beads. - vn *damdama*; ava/pva *midamdim*.

د م ر [1]
دمار *damaar* /n/ ruin.
دمّر *dammar* /vt/ to destroy. - vn *tadmiir*; ava/pva *midammar*.
مدمّرة *mudammira* /n pl *-aat/ [naut]* destroyer.
اتدمّر *ʃitdammar* or *ʃiddammar* /vi/ to be destroyed. - iva *mitdammar*.

د م ر [2] see د م م و ر : *dammuur, dammuriyya*

د م ر [3] see د م ي ر : *dimiira, dimeera*

د م س
دمس *dims* /n/ remains of any threshed crop, used as bedding for cattle, then as fuel.
دمّاسة *dammaasa* /n pl *-aat/* **1** appliance for slow cooking of beans, lentils etc., consisting of a paraffin stove or electric coil, and an aluminium or copper pot with stopper. **2** urn-shaped pot used for slow cooking.
دمّاسي *dammaasi: fuul dammaasi* broad beans which are intended for cooking as *fuul midammis*.
دمّس *dammis* /vt/ to cook (e.g., broad beans, lentils, tripe) in a stoppered container over a slow fire or buried in hot ashes. *(fúul) midammis* dried broad beans cooked by *tadmiis* (a staple food of Egypt). - vn *tadmiis*; ava/pva *midammis*.
اتدمّس *ʃitdammis* or *ʃiddammis* /vi/ passive of *dammis*. - iva *mitdammis*.

د م س ي س
دمسيسة *damsiisa* /n/ sea ambrosia.

د م س ي ه
دماسيه *damaseeh* <Fr *damassé*> /n/ damask cloth.

د م ع
دمع *damɛ* /coll n/ tear(s).
دمعة *dimɛa[1], damɛa↑* /n pl *dimuuɛ, dumuuɛ*/ tear. *ʃid-damm[i] wil-ɛaraq wid-dumuuɛ* blood, sweat and tears. *ma-yimsaḥ-f[i] dimɛit-ak ʃilla ʃiid-ak [prov]* (only your own hand will wipe away your tear) ≈ in times of trouble you can rely only on yourself. ‖*dimɛit-ha sabɋaa-ha* she cries easily. *-zayy[i] dimɛit il-ɛeen* lukewarm.
دمعة *dimɛa[2]* /n/ sauce of tomatoes with stock.
دمّع *dammaɛ* /vi/ to water (of the eyes), shed tears. *fakkarit fii wi-dammaɛit* she thought about him and cried a little. ‖ *ʃis-sama* (or *ʃid-dinya) bi-tdammaɛ* it's drizzling. - vn *tadmiiɛ*; ava *midammaɛ*.

د م غ [1]
دمغ *damaɣ (i)* /vt/ to hallmark (metals) according to purity of content or weight. ‖*damaɣt-u ɛala ɋafaa* I slapped him on the back of the neck. - vn *damɣ*; ava *daamiɣ*; pva *madmuuɣ*.
مدموغ *madmuuɣ* **1** pva of *damaɣ*. **2** /adj/ stamped with a fiscal stamp. *laazim yikuun iṭ-ṭalab madmuuɣ* the application must have a fiscal stamp on it.
دمغة *damɣa* <T *damga*> /n pl *-aat/* **1** *(waraɋit* or *ṭaabiɛ) damɣa* fiscal stamp. *ɛarḍaḥaal damɣa* government petition form with fiscal stamp. *ḍariibit id-damɣa* or *rasm id-damɣa* stamp duty. **2** assay mark. *maṣlaḥit id-damɣa wil-mawaziin* government office responsible for assaying and hallmarking metals.
اتدمغ *ʃitdamaɣ* or *ʃiddamaɣ* /vi/ **1** to be stamped with a fiscal stamp. **2** to be hallmarked or impressed with a mark indicating weight or purity of content. - iva *mitdimiɣ*.
اندمغ *ʃindamaɣ = ʃitdamaɣ*. - iva *mindimiɣ*.

د م غ [2]
دماغ *dimaaɣ* /masc and fem n, pl *dimíɣa, ʃidmiɣa, dimaɣaat/* **1a** top of the head, skull. *ṭuuba wiɋɛit ɛala dmaaɣ-i* a brick fell on my head. *wagaɛ dimaaɣ* (1) headache. (2) bother, fuss, trouble. ‖*gat* (or *ṭabbaɋit) ɛala dmaaɣ-u* he really copped it. *- dimaaɣ baṣal* a large onion. *- ʃiddaa-li dmaaɣ fi-wiff-i* he butted

me in the face. **1b** mind, brain. *ʈiliʒ fi-dmaaʏ-i* it occurred to me. *ma-malit-ʃ[i] dmaaʏ-u* it didn't convince him. *ʕil-fikra di miʃ daxla dmaaʏ-i* I'm not convinced that this idea is right. ‖*dimaaʏ-u naffa* he is stubborn. -*dimaaʏ-u mṣaffaḥa* (1) he is obstinate. (2) he stays up late. **2** knob, knob-like protruberance. *dimaaʏ il-musmaar* the head of the nail.

د م ق see د ق م: *dumqa*

د م ق ر ـ

ديموقراطي *dimuqraaʈi* <prob Fr> **1** /adj */ democratic. **2** /n */ democrat.

ديموقراطيّة *dimuqraʈiyya* /n/ democracy.

د م ك

دمك *damak (i)* /vt/ to press together. *gism-a-ha madmuuk* her flesh is firm. - vn *damk*; ava *daamik*; pva *madmuuk*.

مدماك *midmaak, mudmaak* /n pl*madamiik*/ *[constr]* course of bricks.

اتدمك *ʕitdamak or ʕiddamak* /vi/ to be pressed together. - iva *mitdimik*.

اندمك *ʕindamak* = *ʕitdamak*. - iva *mindimik*.

د م ل [1]

دمل *damal (i)* **1** /vt/ to heal. *ʕil-marham damal il-garḥ* the ointment healed the wound. **2** /vi/ to heal. *ʕil-garḥ[i] damal* the wound healed up. - vn *daml, damaʟaan*; ava *daamil*.

اندمل *ʕindamalʔ* = *dimil*. - ava *mindimil*.

د م ل [2]

دمّل *dimmil* /n pl *damaamil*/ **1** boil. ‖*waaḥid zayy[i] id-dimmil* a touchy person, **2** cyst.

دمّلة *dimmila* /n pl *-aat*/ pustule, pimple.

دمّلاية *dimmilaaya* /n pl *-aat*/ pustule, pimple. *dimmilaaya fil-ʒeen* sty.

دمّل *dammil* /vi/ to develop boils, abscesses or pimples. *wiff-u dammil* his face came out in boils. - vn *tadmiil*; ava *midammil*.

د م ل ج

دملج *damlig* /vt/ to make round and well-formed. - vn *damlaga*; ava/pva *midamlig*.

اتدملج *ʕitdamlig* or *ʕiddamlig* /vi/ to become or be made round and well-formed. *ʕil-bint[i] kibrit wi-gism-a-ha tdamlig* the girl grew up and her figure filled out. - ava/iva *mitdamlig*.

د م ل ك

دملك *damlik* /vt/ to compress, squeeze into a solid mass. *laazim tidamliki l-ʕagiina ʕaʃaan ma-tfarwil-ʃ* you should squeeze the dough together so it doesn't crumble. - vn *damlaka*; ava/pva *midamlik*.

اتدملك *ʕitdamlik or ʕiddamlik* /vi/ to be compressed, be squeezed into a mass. - iva *mitdamlik*.

د م م [1]

دم *damm[1]* /n/ **1a** blood. *laḥm[i] w-damm* flesh and blood. *ʕariib-i min damm-i* my blood relation. *min damm[i] mluuk* of royal blood. *naʔl[i] damm* blood transfusion. *faʔr[i] damm* anaemia. *faṣiilit damm* blood group. ‖*burtuʔaan bi-damm-u* blood oranges. -*ḥagar id-damm* bloodstone. -*damm il-ʕaxaween* dragon's blood. -*ʒaleeha d-damm* she's menstruating. -*(ʕaḥmar) damm il-ʏazaal* deep rose (red) colour. -*ʒumr id-damm[i] ma-yibʔa mayya [prov]* ≈ blood is thicker than water. -*ʕid-damm[i] yḥinn [prov]* an uncanny affinity exists between relatives. -*ʈafaḥ id-damm* to work very hard. -*dafaʕ* (or *ṣaraf* or *kaʕʕ[i]*) *damm[i] ʔalb-u* to pay a very high price. -*ʔarbit id-damm[i] tṣiib-ak* may a pox take you! -*ḥ-asayyaḥ damm-ak* or *ḥ-afrab min damm-ak* ≈ I'll beat the living daylights out of you! -*damm-i nifif* or *ma-baʔaa-ʃ fiyya wala nuʔṭit damm* or *damm-i hirib* or *damm-i gimid* I was frightened out of my wits. -*fawwar damm-i* or *ḥaraʔ damm-i* he made my blood boil. -*ḥaaga fid-damm* something that runs in the blood, an intrinsic part of one's character. -*ma-fii-ʃ fi-wiff-u damm* he has no shame. **1b** blood feud. *benhum damm* they have a blood feud. **2** disposition, (finer) feeling. *raagil ʕandu damm* a considerate man. *damm-u xafiif* he has a cheerful disposition, he has a sense of humour. *damm-u mʕakkar* he's in a bad mood. *damm-u tʔiil* he is stolid. *damm-u baarid* he is a boor. *damm-u zifir* (1) he is unsympathetic or unresponsive. (2) he has venereal disease. *damm-u yulṭuf* he has a boorish offensive disposition. ‖*wid-damm* response to mention of the name of a person one dislikes. -*ya damm* how boorish! -*ya (salaam ʕala) damm-ak* how offensive you are! what a rotten type you are!

دما، دماء *dima, dimaaʕʔ* /pl n/ much blood. *safk[i] dima* bloodshed. ‖*maṣṣaaṣ dimaaʕ* extortioner.

دموى *damawi* /adj/ pertaining to blood, bloody. ‖ *mazaag* (or *ʈabʕ[i]*) *damawi* a sanguine temperament (one of the four cardinal humours).

دمويّة *damawiyya* /n/ ruddiness (of complexion, as a sign of good health).

د م م [2]
دمّة *dimma: ʕis-sabɛa w-dimmit-ha* every conceivable evil. - also *timma*.

د م م [3] see ز م م [2]: *damm²*

د م م و ر
دمّور *dammuur* /n/ type of coarse cotton fabric (used extensively in upholstery).
دمّورية *dammuriyya* /n/ length of *dammuur*.

د م ن [1]
أدمن *ʕadman* /vt/ to become addicted to. *ʕidmaan is-sukr[i] ḍarr[i] ṣiḥḥit-u* addiction to drink damaged his health. - vn *ʕidmaan*; ava *mudmin*.
مدمن *mudmin* /n */ addict. *mudmin muxaddaraat* drug addict. *mudmin ċiraaya* bookworm. *mudmin riyaaḍa* a sports enthusiast.

د م ن [2] see د م أ ن: *dumaan, dumangi*

د م ن ه –
دمنهور *damanhuur* /prop n/ Damanhour, a city in the Western Delta, the capital of the province of Beheira.
دمنهوري *damanhuuri* **1** /adj/ pertaining to Damanhour. **2** /n */ one from Damanhour. *ʕalf[i] nuuri wala damanhuuri [prov]* a thousand Nuri gypsies are preferable to a single Damanhouri (a comment on the alleged Damanhouri propensity for cunning).

د م و see د م م: *dima, dimaaʕ, damawi, damawiyya*

د م ي ا ط
دمياط *dumyaaṭ* /prop n/ Damietta, a town on the northern coast of Egypt where the eastern branch of the Nile joins the sea.
دمياطي *dumyaaṭi* /pl *damayṭa, dumyaṭiyya*/ **1** /adj/ pertaining to Damietta. **2** /n/ native of Damietta.
دميط *damyaṭ [joc]* /vt/ to do or make (s.th.) in the style typical of Damietta. *bi-tquul di gibna dumyaaṭi w-hiyya fallaaḥi - baqa kida tdamyaṭ-ha marra waḥda ya naṣṣaab* you say this is cheese from Damietta, but it's just ordinary cheese - and you've made it into Damietta cheese just like that, you cheat! - vn *damyaṭa*; ava/pva *midamyaṭ*.
اتدميط *ʕitdamyaṭ* or *ʕiddamyaṭ* /vi/ to adopt the ways of a *dumyaaṭi*. - ava *mitdamyaṭ*.

د م ي ر
دميرة *dimiira, dimeera* <Copt> /n/ time of (Nile) flood.

د ن ا ر
ديناري *dinaari* <It *danari*> /n/ diamonds (card suit).

د ن ء see د ن ى: *daniiʕ, danaaʕa*

د ن ب
دنب، ذنب *danab* /n pl *ʕadnaab*/ tail. *danab il-ɠaqrab* scorpion's tail. *danab il-ḥayya* serpent's tail.
دنيبة، ذنيبة *dineeba[1]: ʕabu dneeba* tadpole.
دنيبة، ذنيباء *dineeba[2]* /n/ barnyard grass (Panicum crus-galli, Echinochloa crus-galli) grown as a forage crop, and appearing as a weed in rice fields.

د ن ت ل
دنتلة *dantilla, dantilla* (also *tantan*↓, *tantana*↓) <Fr *dentelle*> /n/ lace. - also *tantilla*.
دنتلّاية *dantillaaya, dantillaaya* (also *tantana*↓) /unit n, pl -*aat*/ piece of lace.

د ن ت ى ل
دانتيل *dantiil, danteel* = *dantilla*.
دنتيلا *dantiila, danteela* = *dantilla*.

د ن ج
دونج *dung* /n pl -*aat*/ portable powered water-pump. - also *dunk*.

د ن ج ل
دنجل *dungul* <T *dingil*> **1** /n pl *danaagil*/ axle. **2** /no pl/ nickname for a tough fast-operating swindler.
دنجل *dangil* **1** /vi/ to hang on under a train (so as to travel without paying), stow away on a train. **2** to play tricks. - vn *dangala*; ava *midangil*.

د ن د ر م
دندرمة، دندورمة *dandurma* (also *dardurma*↓) <T *dondurma*> /n/ ice cream, fruit ice.

د ن د ش
دندش *dandiʃ* /vt/ **1** to (over-)ornament. ‖*nahar-na mdandiʃ* ≈ it must be our lucky day! (said on seeing a pretty girl). **2** to reward (especially with money). *ɠaʃaan il-xidma lli-ddet-haa-li ʕana ḫ-adandiʃ-ak* I'll reward you for the service you've done for me. - vn *dandaʃa*; ava *midandiʃ*.
اتدندش *ʕitdandiʃ* or *ʕiddandiʃ* /vi/ to be (over-)ornamented. - iva *mitdandiʃ*.

د ن د ن
دندن *dandin* /vi/ to hum. - vn *dandana*; ava *midandin*.

د ن د و ن
دندون *danduun* /n/ drip of mucus running from the nose. ‖ *ʕinta fakir-ni b-danduun* do you think I'm just a kid! - also *dannuun*.

د ن د ى
دندى *dindi* <It *dindio*> /n/ turkey meat.

د ن ر [1]
دينار *dinaar* /n pl *dananiir*/ dinar.

د ن ر [2] see د ن ا ر : *dinaari*

د ن س [1]
دنّس *dannisˀ* /vt/ to foul, pollute. *dannisu ʕarḍ-i-na ṭ-ṭahra* they fouled our pure land (with their presence). - vn *tadniis*; ava/pva *midannis*; pva *mudannas*.
اتدنّس *ʕitdannis* or *ʕiddannis* /vi/ to be fouled, be polluted. - iva *mitdannis*.

د ن س [2] see د ن ى س : *diniis*

د ن ش
دنشة *danʃa, dinʃa* /n pl *-aat*/ pinch (of salt, snuff etc.).

د ن ف
دنف *danaf* /adj invar/ oafish.

د ن ق see د ا ن ق : *daaniq*

د ن ك
دونك *dunk* /n pl *-aat*/ portable powered water-pump. - also *dung*.

د ن م see د ن ى م : *daniim*

د ن م و
دينمو *dinamu* <Fr> /n pl *-haat, dinamuwaat*/ dynamo, generator. ‖ *dinamu l-fariiq* the star player of the team, the dynamo of the team.

د ن م ى ت
دينميت *dinamiit* <Fr> /n/ dynamite.

د ن م ى ك
ديناميكا *dinamiika* <It *dinamica*> /n/ *[phys]* dynamics.
ديناميكى *dinamiiki* /adj/ *[phys]* dynamic.

(د ن ن)
دنّ *dinn* /n pl *danaani, dinaan*/ wooden cask, butt. ‖ *ʕitnayyil fi-danaani n-niila* ≈ go to hell!
دنّ *dann- [non-Cairene]* = *tann-*.

د ن ن و ن
دنّون *dannuun* /n/ drip of mucus running from the nose. - also *danduun*.

د ن و see د ن ى : *danaawa*

د ن ى
دنى *dini* /adj pl *dunaay*/ **1** gluttonous. **2** base, low. *dini f-ʕaxlaaq-u* of low morals.
أدنى *ʕadna* /el/ **1** more/most gluttonous. **2** lower/lowest, baser/basest. *ʕil-ḥadd il-ʕadna* the minimum.
دنيا *dinya* or *dunya* /fem n/ **1a** world. *fi-dinya ṿeer id-dinya* in another world. ‖ *ʕana ʒamalt[i] ʕeeh fi-dinyit-i* what in the world have I done (to deserve this)? - *ma-daxal-f[i] dinya* he's had no experience with a woman. **1b** great crowd. *ʕil-buliiṣ ga wig-geef wi-dinya* the police came, and the army, and a great crowd. — *ʕid-dinya* or *ʕid-dunya* **2a** the world (especially with a strong connotation of its vastness). *ʕayy[i] balad fid-dinya* any country in the whole world. *fi-ʕaaxir id-dinya* at the ends of the earth. - /used in construct to indicate greatness or an extreme degree/ *firiḥt[i] faraḥ id-dinya* I was overjoyed. *ʠadd id-dinya* (1) very big, very important, as in *muhandis ʠadd id-dinya* a big-shot engineer. (2) very much, as in *b-aḥibb-ik ʠadd id-dinya* I love you with all my heart. ‖ *ʕumm id-dinya* epithet of Cairo. - *sanduuʠ id-dinya* (1) portable puppet theatre. (2) peep-show. **2b** this world (as opposed to the next). *ʕir-ragil-da karrah-ha fid-dinya w-fig-gawaaz* that man made her hate life and marriage. *ʕid-dinya yoom ʒasal wi-yoom baṣal [prov]* (life is a day of honey and a day of onions) life has its ups and downs. ‖ *bitaaʒ id-dinya* materialist. - *hiyya d-dinya ṭaarit* ≈ what's the rush? **3** the prevailing environment. *ʕid-dinya ḍalma* it's dark. *ʕid-dinya ḥarr* the weather is hot. *ʕid-dinya tiraab* it's dusty. *ʕid-dinya bi-tnaṭṭar* it's raining. *ʕid-dinya ṣiyaam* it's a fasting season.
دنيوى *dunyawi* /adj */ worldly, mundane. ‖ *raagil dunyawi* mercenary or materialistic person.
دنياوى *dinyaawi* = *dunyawi*.
دناءة *danaaʕaˀ* /n/ baseness, vileness.
دناوة *danaawa* /n/ gluttony, self-indulgence, sensualism. *ʕid-danaawa ṭabʒ [prov]* self-indulgence is a matter of nature.
دنىء *daniiʕˀ* /adj */ base, vile, contemptible.
دنيّة *daniyyaˀ* /n pl *-aat*/ vile or base deed. *nafs-u ma-tirḍaa-ʃ id-daniyya* he couldn't bring himself to do a

mean thing.
دنّى *danna* /vt/ to demean. *tidanni nafs-ak ɛala ʃakla* will you demean yourself for a bite to eat? - vn *tadniyya*; ava/pva *midanni*.

د ن ى س
دنيس *diniis* /n/ Chrysophrys aurata, a type of sea bream found in the Mediterranean and the Red Sea.

د ن ى م
دنيم *daniim* <Engl> /n/ denim.

[1] د ه
ده *dih* /fem n/ eighth letter of the Arabic alphabet. - also *daal*.

[2] د ه see د ا : *dahú, dahí*

[1] د ه ب
دهب *dihib (a)* /vi/ to become exhausted, become worn out. *dihibt[i] miʃ-ʃuɣl* I'm worn out from working. - ava *dahbaan*.
مدهوب *madhuub* /adj */ worn out, exhausted. ‖ *ʃibn il-madhuuba [abus]* son of a whore.

[2] د ه ب
دهب، ذهب *dahab* /n/ 1 gold. *ʃil-waqt min dahab* ≈ time is money. *gineeh dahab* gold sovereign. *dahab ʃaḥmar* red gold. *dahab ʃaṣfar* yellow gold. *dahab ʃabyaḍ* (1) white gold. (2) cotton. *ʃid-dahab il-ʃiswid* black gold (petroleum). *dahab qifra* gold-leaf. ‖ *ɛirq[i] dahab* ipecacuanha. - *giziirit id-dahab* a small island in the Nile at Old Cairo. - *mayyit dahab* or *maaʃ id-dahab* gold lacquer. - *zayy id-dahab* exemplary, admirable (of character), as in *qalb-u zayy id-dahab* ≈ he has a heart of gold, *ʃir-raagil da muɛamlit-u zayy id-dahab* that man is very honest in his dealings. - *mihna yaakul minha dahab* an occupation from which he makes a very good living. - *ʃit-turaab fi-ʃiid-u dahab* ≈ he's lucky. - *rixiṣ id-dahab wi-vili n-naḥaas* ≈ values have been turned completely upside down. 2 /coll/ *[euphem]* bedbugs.
دهبى، ذهبى *dahabi, zahabi* /adj */ golden.
دهباية *dahabaaya* /unit n, pl *-aat*/ 1 small piece of gold. 2 *[euphem]* a bedbug.
دهبيّة *dahabiyya* /n pl *-aat*/ *[obsol]* houseboat.
مدهب، مذهب *mudhab* /adj invar/ gilded. *ṣaloon mudhab* gilt sitting-room suite.
دهّب، ذهّب *dahhab* /vt/ to gild. *dahhab ik-kursi da* gild this chair. - vn *tadhiib, tazhiib*; ava/pva *midahhab*.

مدهّباتى، مذهّباتى *midahhabaati* /n pl *-yya*/ gilder.
اتدهّب، اتذهّب *ʃitdahhab* or *ʃiddahhab* /vi/ to be gilded. - iva *mitdahhab*.

[3] د ه ب see [1] ز ه ب : *madhab*

د ه ت و ر
دهتورة *dahtuura* /coll n/ *[bot]* datura. - also *datuura, tatuura, ṭaṭuura*.

د ه د ه
دهده *dihdah* exclamation of surprise and consternation ≈ what's this?

د ه ر
دهر *dahr* /n pl *duhuur*/ 1 (infinite) time, time from the beginning of the world to the end. *kal ɛaleeha d-dahr[i] w-ʃirib* ≈ time has done its worst with it, it has suffered at the hands of time. 2 fortune, fate. *dahr-ak ṣafaa-lak* you've come upon good times.

د ه س
دهس *dahas (a)* /vt/ to trample on, crush, run over. - vn *dahs*; ava *daahis*; pva *madhuus*.
اتدهس *ʃitdahaṣ* or *ʃiddahas* /vi/ to be trampled on, be crushed, be run over. - iva *mitdihis*.
اندهس *ʃindahas* = *ʃitdahaṣ*. - iva *mindihis*.

د ه ش
دهش *dahaf (i)* /vt/ to astonish, amaze. *ḥaaga tidhiʃ* an amazing thing. - vn *dahʃa*; ava *daahiʃ*; pva *madhuuf*.
دهشان *dahʃaan* /adj */ bewildered, perplexed, astonished.
اتدهش *ʃitdahaf* or *ʃiddahaf* = *ʃindahaf*. - ava *mitdihiʃ*.
اندهش *ʃindahaf* /vi/ to be astonished, be amazed. - vn *ʃindihaaf*; iva *mindihiʃ*.
أدهش *ʔadhaf↑* = *dahaf*. - vn *ʃidhaaf*; ava *mudhiʃ*.

د ه ك
دهك *dahak (a)* /vt/ 1 to smear or plaster (with mud). 2 to mash (beans, potatoes etc.). - vn *dahk, dihaaka*; ava *daahik*; pva *madhuuk*.
اتدهك *ʃitdahak* or *ʃiddahak* /vi/ 1 to be smeared or plastered (with mud). 2 to be mashed. - iva *mitdihik*.
دهّك *dahhak* /vt/ 1 to plaster (with mud). 2 to mash (food). — /vi/ 3 to eat hashish. - vn *tadhiik*; ava/pva *midahhik*.

د ه ك س
دهكس *duhuks* /n pl *-aat*/ handle of a drover's whip.

د ه ل ز

دهلز *dahliz* **1** /vt/ to postpone, delay. *qaɛad yidahliz-lina ṭ-ṭalab bitaɛ-na l-ḥadd[i] ma qaaɛ il-waqt* he went on holding up our application until it was too late. **2** /vi/ to make a discreet approach, prepare the way. *da ɛaayiz yidahliz-li ɛafaan ʕagawwiz-lu bint-i* he's trying to soften me up so I'll marry my daughter to him. *qaɛadna ndahliz lil-masʕala di kaam yoom* we spent several days paving the way to this subject. - vn *dahlaza*; ava/pva *midahliz*.

مدهلزاتى *midahlizaati* /n pl *-yya*/ person practised in *dahlaza*.

دهلاز *dihlaaz* /adj pl *dihlaaza*/ smarmy, smooth-talking.

دهليز *dahliiz* /n pl *dahaliiz*/ *[rur]* vestibule, porch (of a house).

اتدهلز *ʕitdahliz* or *ʕiddahliz* /vi/ to toady, smarm, deceive by flattery. *yiddahliz ɛan-naas ɛafaan ʕaɤraaḍ-u* he wheedles his way round people for his own ends. - /impersonally/ *muf ana lli yiddahliz ɛalee* I am not one to be deceived. - vn *tidahliiz*; ava/pva *mitdahliz*.

(د ه ل ل)

دهل *duhull* /adj invar/ gullible, gormless. *mara duhull* a dumb broad.

دهلّة *duhulla* <P *duhul*> /n pl *-aat*/ bass drum.

د ه م [1]

دهم *daham (i)* /vt/ to take unawares. *dahamit-ha ɛarabiyya* a car ran into her suddenly. *daham-u ɛazraʕiil* ≈ he died unexpectedly. - ava *daahim*.

داهم *daahim↑* = *daham*. - ava *midaahim*.

د ه م [2] see د ا م: *dahúm, dahumma, dahummat, dahummak, dahumman, duhamma, duhammat, duhammak, duhamman*

د ه ن

دهن *dahan (i)* /vt/ **1** to coat, paint (with oil paint, varnish, grease etc.). ‖*kalaam madhuun* glib talk, unctuous words. - *kalaam il-leel madhuun bi-zibda - ʕiza ṭiliɛ in-nahaar ɛalee saaḥ [prov]* ≈ promises made at night tend to be forgotten the next morning. **2** *[Chr]* to anoint. *bi-yṣallu ɛalee wi-yidhinuu bi-zeet bi-sm ir-rabb* they pray over him and anoint him with oil in the name of the Lord. — /vi/ **3** to toady, curry favour. *ʕidhin-lu ʃwayya w-huwwa yiddii-k illi-nta ɛawz-u* butter him up a bit and he'll give you what you want. **4** to use aphrodisiac ointment. - vn *dihaan, dahaan*; ava *daahin*; pva *madhuun*.

دهان *dihaan, dahaan* /n pl *-aat*/ **1** paint. ‖*dihaan ɛala wabar* something superficial and therefore fragile, as in *ṣuḥubiyyit-hum dihaan ɛala wabar* their friendship can't last. **2** ointment.

دهن *dihn, duhn↑* /n pl *duhuun*/ fat, grease. *laḥma b-dihn* fatty meat. *duhuun nabatiyya* vegetable fats. ‖*dihn il-ward* attar of roses. - *ʕid-dihn[i] fil-ɛataaqi [prov]* (old chickens are the ones with fat on) the best wine comes in old bottles.

دهنة *dihna* = *dihn*.

دهنى *duhni* /adj/ fatty, greasy. *ʃaɛr[i] duhni* greasy hair. *ʕaḥmaaḍ duhniyya [chem]* fatty acids. ‖*kiis duhni [path]* sebaceous sac.

دهنيّات *duhniyyaat* /pl n/ fats, fatty foods. *ma-b-akul-ʃ[i] duhniyyaat ɛalaʃaan ɛamla rijiim* I don't eat fats because I'm on a diet.

دهن *dihin* /adj/ fatty.

أدهن *ʕadhan* /el/ more/most fatty.

مدهن *midhin* **1** /adj */ fatty. *laḥma midhina* fatty meat. **2** /adj * or invar/ obese. *mara midhina* a fat woman.

اتدهن *ʕitdahan* or *ʕiddahan* /vi/ **1** to be coated (with paint, varnish, grease etc.). **2** *[Chr]* to be anointed. - iva *mitdihin*.

دهّن *dahhan, dahhin* /vt/ to paint or smear in blotches. - vn *taḍhiin*; ava/pva *midahhin*.

اتدهّن *ʕitdahhin* or *ʕiddahhin* /vi/ **1** to oil or anoint oneself. **2** to be oiled or anointed. - vn *tadahhun↑*; ava/iva *mitdahhin*.

داهن *daahin* /vi/ to deceive by flattery. - vn *midahna*; ava *midaahin*.

استدهن *ʕistadhin* /vt/ **1** to select for fattiness. **2** to consider (too) fatty. - ava *mistadhin*.

د ه ن ن

دهنن *dahnin↓* **1** /vt/ to make greasy. *ḥaasib la-tdahnin ʕidee-k* take care! you may get grease on your hands. **2** /vi/ to become greasy. - vn *dahnana*; ava/pva *midahnin*.

اتدهنن *ʕitdahnin↓* or *ʕiddahnin↓* /vi/ to become greasy. - ava *mitdahnin*.

د ه و [1] see د ه ى [1]: *dahwa*

د ه و [2] see د ا ه و: *dahú*

د ه و ر

دهور *dahwar* /vt/ to cause to decline, cause to deteriorate. *ʕis-sahar dahwar ṣiḥḥit-u* staying up late had a bad effect on his health. - vn *dahwara*; ava/pva *midahwar*.

اتدهور *ʕitdahwar↑* or *ʕiddahwar↑* /vi/ to deteriorate.

tadahwur il-ʕilaqaat been il-baladeen the deterioration in relations between the two countries. - vn *tidahwiir*↓, *tadahwur*; ava *mitdahwar*.
تدهويرة *tidahwiira* /inst n, pl *-aat*/ a deterioration, a decline.

د ه و س
دهوس *dahwis* /vt/ to trample (on). *ʔil-ʕiyaal dahwisu z-zarʕ* the children trampled on the plants. *ʔana saamiʕ dahwasa barra* I can hear someone trampling about outside. ‖ *dahwis kalaam-i* he rode roughshod over my arguments. - vn *dahwasa*; ava/pva *midahwis*.
اتدهوس *ʔitdahwis* or *ʔiddahwis* /vi/ to be trampled on. - iva *mitdahwis*.

د ه و ل
دهول *dahwil* /vt/ to mess up, wreck, throw into confusion. *ʔil-ʕiyaal dahwilu l-ʔooḍa* the kids made a mess of the room. *ʔil-ʕaya dahwil-u* the illness affected him badly. ‖ *midahwil ʕala ʕeen(-u)* wretched, miserable. - *midahwil fi-rooḥ(-u)* or *midahwil fi-nafs(-u)* scruffy. - vn *dahwala*; ava/pva *midahwil*.
اتدهول *ʔitdahwil* or *ʔiddahwil* /vi/ to get messed up, be thrown into confusion. - iva *mitdahwil*.

د ه و و see د ا: *dahuwwa, dahuwwat, dahuwwak, dahuwwan, dihawwa, dihawwat, dihawwak, dihawwan*

د ه ي [1]
دهى *daha (i)* /vt/ to overcome, overwhelm. *ḥaaga dahit-ni - ma-ʕrift[i]-ʃ ʔakkallim* something came over me; I couldn't speak. - ava *daahi*; pva *madhi*.
داهية *dahya* /n pl *-aat, dawaahi*/ calamity. *gat-ak dahya* ≈ to hell with you! may a calamity befall you! ‖ *waddaa f-dahya* ≈ he caused him a lot of trouble, he gave him a hard time. - *raaḥ fi-dahya* ≈ (1) he came to a bad end. (2) he went, and good riddance to bad rubbish! - *raagil dahya* ≈ a sly devil. *ya dahyit id-dawaahi* ≈ you sly devil! - *ga min ʔanhi dahya* where the hell did he come from! - *dahyit-u (ʕala) baṭn-u* ≈ he's interested only in filling his belly. - *dahyit il-baṭn[a] ḥarra [prov]* ≈ gluttony leads people into a lot of trouble. - *taḥt is-sawaahi dawaahi [prov]* ≈ still waters run deep. - *ya dahya duqqi* ≈ oh no! now we're in for it! - *ya dahya law* ... what a disaster it would be if ..., as in *ya dahya law ḥadd[i] ʃaf-na* what trouble we would be in if anyone were to see us!
دهوة *dahwa* /n/ calamity. *ya dahwit-i [women]* O my calamity! (a conventional exclamation of dismay), as in *ya dahwit-i ʔeeh illi b-tiʕmil-u ya walah* good God, what are you doing, boy?
أدهى *ʔadha* /el/ more/most calamitous. *wil-ʔadha min kida* ... what's worse than that, as in *wil-ʔadha min kida ma-dafaʕ-ʃ il-ʔigaar* and what is more he hasn't paid the rent!
دهاء *dahaaʔ* /n/ cunning.

[2] د ه ي see د ا: *dahí*

د ه ي ي see د ا: *dihayya, dihayyat, dihayyak, dihayyan, dahiyya, dahiyyat, dahiyyak, dahiyyan, dihiyya, dihiyyat, dihiyyak, dihiyyan*

د و [1]
دو *doo[1]* <prob It *do*> /n/ *[mus]* **1** the note C. **2** doh.

[2] د و see د و ه: *doo[2]*

د و ا ي
دواية *dawaaya[1]* <Fr *douille*> /n pl *-aat, diwy, duwy*/ light-bulb socket. *dawaaya musmaar* bayonet light-bulb socket. *dawaaya ʕalawooz* screw-in light-bulb socket.

د و ب [1]
داب، ذاب *daab (u)* /vi/ **1** to dissolve. *ʔis-sukkar bi-yduub bi-surʕa fil-mayya s-suxna* sugar dissolves quickly in hot water. *madda ʕabla lid-dawabaan* soluble substance. ‖ *(ka-ʔinn-a-ha) faṣṣ[i] malḥ[i] w-daab* (she) vanished. - *hiyya dayba fii* she is madly in love with him. - *ʕalb-a-ha daayib ʕala-bn-a-ha* she worries a lot about her son. **2** to wear out. *ʔil-farʃ[i] daab xalaṣ* the furniture has completely worn out. *ʔil-yaaʕa baʕit dayba* the collar has worn out. ‖ *ʔibn id-dayba [abus]* son of a whore. - *ḥ-aḍrab-u bid-dayba* I will hit him with the old shoe! - vn *doob, dawabaan*; ava *daayib*.
مديوب *madyuub* /adj */ *[abus]* wretched.
دوّب، ذوّب *dawwib* /vt/ **1** to dissolve, cause to dissolve. **2** to wear out. ‖ *tidawwibii-ha f-ʕaraʕ il-ʕafya [women]* (may you wear it out with healthy perspiration) ≈ wear it in good health! (said to someone who has just bought a new garment). - *tidawwibi ʕadad xeṭan-ha [women]* ≈ may you live to wear out as many garments as this one has threads! (said to someone who has just bought a new garment). - vn *tadwiib*; ava/pva *midawwib*.
تدويبة *tadwiiba* /inst n, pl *-aat*/ **1** a dissolving. *ʕayiz-lu tadwiibit farba dubl[i] l-baṭn-u* ≈ he needs a strong laxative for his bowels. **2** a wearing out.

اتدوّب ʕitdawwib or ʕiddawwib /vi/ **1** to be dissolved. **2** to be worn out. - iva *mitdawwib*.
مذيب *muẓiib↑* /n pl *-aat*/ solvent.
مذاب *muẓaab↑* /n pl *-aat*/ solute.

[2] د و ب see ي د و ب: *yadoob*

د و ب ي
دوبي *duubi* <Engl> /n pl *dawaabi*/ *[text]* dobby.

د و ت
دوتة *doota* <It *dote*> /n pl *-aat*/ dowry. - also *duṯṯa, dooṯa*.

د و ت ت
دويتو *duwittu* <It *duetto*> /n/ duet.

د و ح ر
دوحر *dooḥar* /vi/ to apply oneself determinedly and incessantly, keep at it. *ʔaaʕid yidooḥar fil-mas ʕala leeh* why does he keep on battling with the problem? - vn *mudoḥra*; ava *midooḥar*.

د و ح س see also د ح س
دوحس *dòoḥas* /vi/ to become abscessed under the nail (of a finger or toe). - vn *midoḥsa*; ava *midooḥas*.
دحاس *duḥaas* /n pl *dawaḥiis*/ whitlow, abscess under the nail of a finger or toe.

د و خ
داخ *daax (u)* /vi/ **1** to become dizzy. **2** to experience difficulty, be given the run-around. *duxt is-sabaʕ doxaat ʕaʃaan ʕalaaʔi ḥaaga ʕidla* I had an awful time finding something suitable. ‖*kunti feen ya mara ya dayxa [abus]* where've you been gadding about, woman? - vn *dooxa, dawaxaan*; ava *daayix*.
دوخ *dawax (i)* /vt/ to make dizzy. *ʕil-ḥarr[i] dawax-ni* the heat made me dizzy. - vn *dawaxaan*; ava *daawix*; pva *madwuux*.
دوخة *dooxa* /n pl *-aat*/ dizziness, nausea, dizzy spell. ‖*ya di-d-dooxa* what an awful time!
اتدوخ ʕitdawax or ʕiddawax /vi/ to be made giddy or dizzy. *ʕiddawax[t][i] miḍ-ḍarba* I was stunned by the blow. - iva *mitdiwix*.
دوّخ *dawwax* /vt/ **1** to make dizzy. *ʕil-quʕaad bi-ydawwax-ni* sitting up makes me dizzy. ‖*dawwaxii-ni ya lamuuna* a child's game in which the winner is the one who keeps spinning round longest without getting giddy. **2** to cause (s.o.) difficulty, give (s.o.) the run-around. - vn *tadwiix*; ava *midawwax*.
اتدوّخ ʕitdawwax or ʕiddawwax /vi/ passive of *dawwax*. - iva *mitdawwax*.

[1] د و د
دود *duud* /coll n, pl *didaan*/ worm(s), maggot(s), caterpillar(s). ‖*duud ruumi* leech(es). - *ẓayy id-duud* (a crowd milling and swarming) like worms. - *maat wi-kal-u d-duud* he died long ago. - *kul id-duud ʔabl[i] ma yakl-ak [prov]* (1) eat the worms (in your food) before they have a chance to eat you (when you die). (2) it's either them or us.
دودة *duuda* /unit n, pl *-aat*/ a worm, a maggot, a caterpillar. *duudit il-ḥariir* or *duudit il-ʔazz* silkworm. *duuda fariṭiyya* tapeworm. *ʕid-duuda d-dawwaara* or *duudit il-ʕiskaaris* roundworm. *duudit il-quṭn* cotton-pest. ‖*ʕabu duuda* or *waaḥid ʕandu duuda* catamite, passive homosexual. - *fi-ʔalb-u duuda minni* ≈ he bears a grudge against me.
دوّاد *dawwaad* /n */ (in folk medicine) specialist in removing parasitical worms from the eyes and nose of children or sheep.
دوّد *dawwid* /vi/ to become worm-eaten, become riddled with worms. ‖*raas-u dawwidit* (1) his head became infested with lice. (2) his head was badly affected with ringworm. - *ya mdawwid [abus]* ≈ you creep! - vn *tadwiid*; ava *midawwid*.

[2] د و د
مدود، مذود *madwid, midwid, midwad* /n pl *madaawid*/ feeding-trough, manger.
مزود، مذود *mizwad* /n/ *[Chr]* manger (in a Christmas tableau).

[3] د و د see ء د و د: *ʕadwad*

د و ر
دار *daar[1] (u)* /vi/ **1** to circle, move in a circle, go around. *ʔamar ṣinaaʕi bi-yduur ḥawaleen il-ʕarḍ* a satellite which orbits the earth. *ḥa-nduur ʕala l-makaatib kull-a-ha* we'll go round to all the offices. *durt[i] fid-dunya* I roamed the world. *ʕid-diwaara wara l-banaat* skirt-chasing. *laff[i] w-dawaraan* (1) beating about the bush. (2) deviousness. ‖*ʕil-kaas id-daayir* (the cup which circulates) death. - *bint[i] dayra* a loose girl. - *ʕala daayir malliim* to the last penny. - *ʕeef ʕala baal id-daayir mi-lli bi-yʕaayir [prov]* one who is irresponsible can't understand one who takes things seriously. - *daarit il-ʕayyaam* time went by. - *daayir ma*

yduur or *dayrin daayir* all around, as in *bi-nxayyaṭ-ha daayir ma yduur* we sew all round them. **2a** to revolve, rotate. *kull*[a] *ɛagala bi-tduur ɛala l-ʔaks*[i] *btaɛ-ha* each wheel revolves on its axle. *surɛit id-dawaraan* speed of rotation. *daar ɛala kaɛb-u* he spun round on his heel. *daarit ɛala nafs-a-ha* she turned round. ‖*raas-i daarit* I became dizzy. - *bi-yduur ɛala zabaan-u* he's just bumming around. - *munfaar dawaraan [carp]* pad-saw. - *ʔil-ḥagar id-daayir la budd*[i] *min laṭṭ-u [prov]* one who involves himself in many activities should expect a few mishaps. - *ʃimaal duur [mil]* left, turn! *lil-xalf*[i] *duur [mil]* about, turn! **2b** to run, turn (of a motor etc.). *ṭiliɛt agiib if-fanṭa w-sibt il-mutoor daayir* I got out to fetch the bag and left the engine running. *xalli l-mutoor yiduur* start the engine! ‖*daarit benhum xinaaqa* they had a quarrel. **3** to reach maturity (of cheese or wine). *bi-ysiibu l-miff*[i] *ɛaʃaan yiduur* they leave the *miff* to ferment to maturity. ‖*gibna dayra* a cheese made from skimmed milk and matured in milk and salt for at least a year. **4** to be stirred and mixed to the correct shade (of paint). - vn *dawaraan, diwaara, duwaara*; ava *daayir*.

دور *dawar (i)* /vt/ to confuse, perplex. *ḥaaga tidwir id-dimaay* something that confuses the mind. - vn *dawar*; ava *daawir*; pva *madwuur*.

دار *daar*[2] *(i)* /vt/ **1** to turn, change the position of. *daarit ḍahr-a-ha liyya* she turned her back on me. **2** to manage, administer. *bi-tdiir fuʔuun bet-ha* she manages her household affairs. - ava *daayir*.

دوران *dawaraan* /n pl *-aat*/ **1** curve, curvature. **2** circumference. **3** somersault (in diving).

دورانى *dawaraani* /adj/ rotational. *ḥaraka dawaraniyya* rotational motion.

داير *daayir* /n pl *dawaayir*/ outer edge, surround. *daayir il-maḍrab* the frame of the racquet.

دايرة *dayra* /n pl *dawaayir, dayraat*/ **1** circle, ring. *dayra kamla* full circle. *dayrit is-sinṭar [soccer]* centre circle, ten-yard circle. *ʔid-dayra l-quṭbiyya ʃ-ʃamaliyya* the Arctic Circle. ‖*dayrit maɛaarif* encyclopedia. **2** circuit. *dayra kahrabaʔiyya* electrical circuit. *dayrit zeet* oil circuit. **3** precinct, area defined for a particular purpose. *dayra ntixabiyya* constituency. *dayrit maḥkamit ɛabdiin* the jurisdictional area of the 'Abdin Court. **4** *[leg]* division of a court of justice. **5** *[obsol]* large landholding, usually including several estates.

دايرى *dayri* /adj/ **1** circular. *xaṭṭ*[i] *dayri* circular bus-route. ‖*malaff*[i] *dayri* circular memo. **2** cylindrical.

دار *daar*[3] /fem n, pl *duur, diyaar*/ **1** *[rur]* house. *ṣaḥn id-daar* courtyard. *min xarag min daar-u ʔiṭɛall*[i] *miṣdaar-u [prov]* he who leaves home loses respect. *ṣabaaḥ il-xeer ya gaar-i ʔinta f-daar-ak w-ana f-daar-i* ≈ good neighbours are polite to each other but do not interfere in one another's affairs. ‖*moot wi-xaraab diyaar* death and destruction, total ruin. - *ya daar ma-daxal-ik ʃarr* ≈ it's all the same, no harm has been done (said, e.g., in approval of a proposed change in a plan). - *min id-daar lin-naar* ≈ directly, immediately (into trouble). **2** establishment, house. *daar naʃr* publishing house. *daar il-qaḍaaʔ il-ɛaali* the Court of Criminal Appeal. *daar il-ɛuluum* college in Cairo specialising in Arabic and Islamic studies (part of Cairo University). *daar ḥaḍaana* children's nursery. *duur il-muɛallimiin* teacher-training colleges. **3** abode, dwelling place. ‖*ʔid-diyaar il-maṣriyya* Egypt. - *mufti d-diyaar* the Grand Mufti of Egypt. - *ʔid-daar il-ʔaaxiraˆ* or *daar il-ʔaxraˇ* or *daar il-baqaaʔˆ* the hereafter. - *daar id-dunya* or *daar il-fanaaʔˆ* this present world. - *daar il-xuld* paradise.

دور *door* /n pl *ʔadwaar*/ **1** turn (in a succession). *bid-door* in turn, by turns. *ɛaleek id-door* it's your go. *laazim tistanna door-ak* you must wait your turn. ‖*door il-mayya [agric]* (one's) turn to be supplied with irrigation water. **2** stage. *door in-nuḍg* stage of maturity. *door iṭ-ṭufuula* stage of childhood. ‖*raagil min door-i* a man of my age. - *ḥuwwa bi-ynaaziɛ fid-door il-ʔaxiir* he is dying. **3** round. *door kutʃiina* a round of cards. *xad* (or *kisib) id-door* he won the game. *door sagaayir wi-door ḥaaga saqɛa* first cigarettes and then a cold drink. *daxalna maɛa baɛḍ*[i] *f-door ṣuḥubiyya* we made friends with each other. **4** circuit. *bi-yiṭlaɛu s-suɛaah bil-ʔadwaar* the messengers go out on their rounds. **5** bout, fit. *ʔid-door bi-yziid wil-ʔazma b-tiigi.ktiir* the bout grows worse and the crisis comes more frequently. *waaxid door zukaam* he has a cold. **6** role. *ʔeeh door il-muwaẓẓaf fil-ḥarb* what is the role of the civil servant in the war? **7** storey, tier. *ɛandu beet ṣuvayyar talatt idwaar* he has a small three-storey house. ‖*xidmit ʔadwaar* floor service (in a hotel). **8** *[mus]* responsorial musical form consisting of long vocal solo passages beginning in a fixed key and modulating to any number of keys, alternating with choral responses in the original key. **9** *[obsol]* stanza in a *muwaʃʃaḥ*.

دور *dawr: dawr kindi [mus]* rhythmic mode in 7/8 time consisting of a strong beat and two weak beats each of one count followed by a strong beat and a weak beat, each of two counts.

دورة *doora* /n pl *-aat*/ **1** cycle, system (e.g., of an engine). ‖*doorit mayya* water-closet, lavatory. **2** ride (on, e.g., horse or camel).

دورة *dawraˆ* /n pl *-aat*/ **1a** (cyclic) stage, (seasonal) session. *dawra tadribiyya* training cycle. *dawra*

ʃahriyya menstrual period. *dawra ziraɛiyya* crop rotation. *dawrit il-baraamig iṣ-ṣefiyya* the summer period (radio and television) programmes. **1b** tournament. **1c** revolution. **2** circulation. *ʃid-dawra d-damawiyya* blood circulation.

دورى *dawri* **1** /adj/ periodic. *ɛilaawa dawriyya* annual increment. *bi-ṣifa dawriyya* periodically. **2** /n/ sporting tournament (notably the football championship).

دوريّة *dawriyya* /n pl *-aat*/ patrol, military patrol. *ɛasaakir id-dawriyya* police patrol. *ʃid-dawriyyaat is-saaḥiliyya* coast patrols, coastguard.

دوريّة *diwariyya, dawariyya* /n pl *-aat*/ **1** circumference. *ʃizraɛ-u f-dawariyyit is-suur* plant it around the fence. **2** *[butcher]* intestines and surrounding parts.

دوّار *dawwaar*[1] /adj/ revolving. *baab dawwaar* a revolving door. *riiḥ dawwaar* cyclone. *makanit iṭ-ṭibaaɛa d-dawwaara* rotary press (newspaper). ‖ *ʃid-duuda d-dawwaara* roundworm. - *ɛumr id-dawwaara ma-trabbi katakiit [prov]* (a woman who is never at home can't raise chicks) ≈ a rolling stone gathers no moss.

دوّار *dawwaar*[2] or *duwwaar* /n pl *dawawiir/ [rur]* **1** common guest-house in a village, for the accommodation of strangers. *dawwaar il-ɛumda* place where the village mayor receives officials and visitors. **2** cattle-pen.

دوّارة *dawwaara* (also *dawwaarit ir-riiḥ*) /n pl *-aat*/ weathercock.

ديّارة *dayyaara*[1] /n pl *dayayiir, dayyaraat*/ large grain sieve.

مدار *madaar* /n pl *-aat*/ **1** track on which an animal moves around a water wheel. **2** orbit. ‖ *ɛala madaar is-sana* (or *il-ɛaam*) all the year round, as in *ʃil-burtuqaan bi-nlaqii dilwaqti ɛala madaar is-sana* now we find oranges all through the year. - *madaar il-gady* Tropic of Capricorn. *madaar is-saraṭaan* Tropic of Cancer. - *ʃil-madaar ɛala* ... the essential thing is ..., as in *ʃil-madaar ɛal-fuluus li-kmaalit il-maʃruuɛ* money is essential to finish the project, *ʃil-madaar ɛala mwafqit-u* all that matters is his approval.

اتدور *ʃitdawar* or *ʃiddawar* /vi/ to be confused, be perplexed. - iva *mitdiwir*.

اندور *ʃindawar* = *ʃitdawar*. - iva *mindiwir*.

اندار *ʃindaar* /vi/ to turn. *ʃindaar ɛalayya* he turned on me. ‖ *bil-mindaar* back to front, as in *ʃid-dinya maʃya bil-mindaar* the world is going backwards. - *daayir mindaar* all round. - ava *mindaar*.

دوّر *dawwar* /vt/ **1a** to cause to turn (round). *dawwarna l-ɛarabiyya wi-rgiɛna* we turned the car about and went back. ‖ *dawwar maktab [mil]* command to report to the commanding officer (for wrongdoing). **1b** to cause to circulate. *dawwar il-kaas ɛaleena* pass the glass around to us. ‖ *dawwar laha ɛaql-a-ha* he perverted her thinking. **2** to make round. *dawwari ḥardit il-kumm*[i] *ʃwayya* cut the sleeve with more curve. **3a** to cause to run, cause to be in operation. *dawwar il-makan* start the engines! **3b** to cause to be under way or in progress. *dawwar xinaaqa benhum* he set a quarrel going between them. **4** to stir and mix (paints and the like) correctly. — /vi/ **5** to turn around, turn back. *ʃil-ɛarabiyya ɛaṭlaana w-ḥa-tdawwar ɛal-garaaj* the bus has broken down and is going to go back to the garage. **6** to look (for s.th.), quest, search. *ʃilli ydawwar yilaaqi* ≈ seek and you shall find. *bi-ydawwar-li ɛala ʃaqqa* he's looking for a flat for me. *laazim tidawwaru ɛalee wi-tgibuu min taḥt il-ʃarḍ* you must search for it and bring it, regardless of effort. *ʃibn-u ɛala kitf-u w-bi-ydawwar ɛalee [prov]* ≈ it's right under his nose and he can't find it. *dawwart*[a] *ɛalee ṣalqaṭ fi-malqaṭ* I have looked high and low for it. - vn *tadwiir, tadwiir*; ava/pva *midawwar*.

تدوير *tadwiir* /n pl *-aat*/ twisting (of threads).

تدويرة *tadwiira* /n pl *-aat*/ **1** instance noun of *tadwiir*. **2** semicircular cut in cloth.

مدوّر *midawwar* **1** /adj */ round, rounded, curved. *ʃibra mdawwara* a curved needle. ‖ *ʃil-ɛeen il-midawwara [magic]* the evil eye. **2** /n/ *[mus]* a rhythmic mode in 12/4 time.

ديّر *dayyar* /vt/ to turn (s.th.) around. *dayyart il-maktab* I turned the desk around. *ʃit-tarzi dayyar il-jakitta* the tailor remade the jacket with the cloth reversed. *laazim tidayyar il-maraqa* you must stir the gravy. ‖ *dayyar dimaaɣ-i* he got me to change my mind. - *ḥaaga tdayyar il-muxx* something that puts one at a loss. - vn *tadyiir*; ava/pva *midayyar*.

اتدوّر *ʃitdawwar* or *ʃiddawwar* /vi/ **1** to turn round. **2** to be or become turned round. - ava/iva *mitdawwar*.

اتديّر *ʃitdayyar* or *ʃiddayyar* /vi/ to move through a revolution. *ʃil-wagaɛ kaan fi-baṭn-i wi-tdayyar li-wara w-taḥt* the pain was in my abdomen, then it moved round behind and further down. - ava *mitdayyar*.

داور *daawir* /vt/ to equivocate with, be devious with (s.o.). *yuqɛud yiḥawir-ni wi-ydawir-ni* he never gives me a straight answer. - vn *midawra*; ava *midaawir*.

مداورة *midawra, mudawra*[↑] /n pl *-aat*/ deviousness.

أدار *ʃadaar* /vt/ to manage, administer. *suuʃ il-ʃidaara* mismanagement. *maglis il-ʃidaara* administrative board, board of directors. ‖ *muftaaḥ il-ʃidaara [auto]* starter switch. - *ḥa-tiɛmil ʃidaara ɛala miin* who you are bossing! - vn *ʃidaara, ʃadaara*[↓]; ava *mudiir*.

إدارة *ʃidaara* /n pl *-aat*/ administrative department. *ʃidaarit it-taḥqiqaat* the Office of Investigation. *ʃidaarit*

it-taraxiiṣ the licensing department. *ʕidaarit il-ʕafraad* personnel office.

إداري *ʕidaari* /adj */ administrative, executive. *musaaɛid ʕidaari* administrative assistant. *mudiir if-fuʕuun il-ʕidariyya* director of administrative affairs. *ʃahaada ʕidariyya* certificate authenticated by two governmental officials and their immediate supervisor. *kaadir ʕidaari* administrative pay scale. *rusuum ʕidariyya* administrative fees. ‖*yoom ʕidaari [mil]* day set aside for washing clothes.

إدارجي *ʕidargi* /n pl *-yya*/ good administrator.

مدير *mudiir* /n */ manager, director (of a company, government department etc.). *mudiir ɛaamm* director general. *mudiir mustaxdimiin* personnel director.

مديريّة *mudiriyya* /n pl *-aat*/ **1** *[obsol]* former designation of an Egyptian province (later termed *muḥafẓa*, the sole exception being *mudiriyyit it-taḥriir*). **2** designation of the provincial apparatus of a ministry (headed by a *mudiir ɛaamm*). *mudiriyyit it-tarbiya wit-taɛliim fi-bani sweef* the Directorate of Education in Bani Suef.

مستدير *mustadiir* /adj */ rounded.

د و ر ق

دورق *dooraq* /n pl *dawaariq*/ **1** pitcher or jug. **2** *[chem]* flask. **3** glass bowl of a water-pipe (see Pl.I, 5).

د و ز ن

دوزن *doozan* <T *düzen*> /vt/ to tune (an instrument). -vn *duzaan, miduzna*; ava *midoozan*.

د و س [1]

داس *daas (u)* /vt/ **1** to step on, tread on, trample on. *daas il-ward* he trod on the flowers. *duus banziin* step on the gas! *ʕiwɛa l-ɛarabiyya tduus-ak* be careful the car doesn't run you over! ‖ *ʕilli yiɛmil ḍahr-u ɣanṭara yistaḥmil id-doos [prov]* he who accepts mistreatment in the beginning should not complain of its continuation. — /vi/ **2** to step, tread, trample. *daas fil-waḥla* he stepped in the mud. ‖*ma-ḥadd[i]-ʃ das-lu ɛala ṭaraf* nobody gave him cause to be angry. - *ʕilli yduus ɛaleek duus ɛalee* show no consideration to those who show you none. - *bi-yduus ḥaafi* he goes barefoot. **3** to exert pressure. *baṭn-i b-tiwgaɛ-ni lamma ʕaduus ɛaleeha* my stomach hurts when I press it. **4** to lay emphasis. *laazim ʕaduus ɛan-nuqṭa di* I must emphasize this point. -vn *doos, dawasaan, diwaasa, duwaasa*; ava *daayis*.

دوس *doos: ḥoos doos* utter confusion, as in *xallu l-masʕala ḥoos doos* they turned the matter into a complete mess.

دوسة *doosa[1]* **1** instance noun of *doos*. ‖*(ya ḥost-i) ya dost-i [women]* ≈ what a calamity! **2** /n/ Sufi ceremony in which the sheikh walks upon the necks of his followers.

دوّاسة *dawwaasa* /n pl *-aat*/ any of the range of things upon which a foot may be placed, or the pressure of a foot exerted (e.g., foot-rest, treadle, duck-board, pedal, bath-mat, car-mat etc.).

مداس *madaas*↓ /n pl *-aat*/ pair of any type of footwear. ‖*ɛamal li-... xadd-u madaas* (to make one's cheek a stepping place for ...), treat (s.o.) with the utmost respect.

انداس *ʕindaas* /vi/ **1** to be trodden on, be walked on. *naas bi-tindaas wi-naas bi-tinbaas [prov]* (some people are trodden on and some are kissed) ≈ life is a matter of luck. **2** to be degraded. -iva *mindaas*.

اتداس *ʕitdaas* or *ʕiddaas* = *ʕindaas*. -iva *mitdaas*.

دوّس *dawwis* = *daas*. -vn *tadwiis*; ava/pva *midawwis*.

اتدوّس *ʕitdawwis* or *ʕiddawwis* = *ʕindaas*. -iva *mitdawwis*.

د و س [2]

دوسة *doosa[2]* <P *dû-sih*> /n pl *-aat*/ pair of threes (in backgammon).

د و ش [1]

دوش *dawaʃ (i)* /vt/ to bother, irritate, trouble. *dawaʃit-na b-ṭalabat-ha k-kitiira* she bothered us with her numerous requests. *ʕinta dawaʃt[i] dmaaɣ-i* you gave me a lot of trouble. *ʕil-ɛiyaar illi ma-yṣib-ʃ[i] yidwiʃ [prov]* (the bullet which doesn't hit its mark is (nevertheless) a bother) one may have been saved the bite, but the barking was bad enough. - vn *dawaʃ, dawʃa*; ava *daawiʃ*; pva *madwuuʃ*.

دوشة *dawʃa* /n pl *diwaʃ*/ **1** loud noise, din, uproar. *miʃ qaadir ʕaʃtaɣal fid-dawʃa di* I can't work in this din. **2** fuss and bother, commotion. *ʕaɛmil-lak dawʃa* do you want me to make a scene! ‖ *wid-dawʃa di* and what-have-you, and so on, as in *lamma ɛazzilu kaan laazim yaxdu l-ɛaff[i] wil-hiduum wiʃ-funaṭ wid-dawʃa di kull-a-ha* when they moved, they had to take their furniture, clothes, bags and everything.

دوشجي *dawʃagi* /n pl *-yya*/ noisy boisterous person.

أدوش *ʔadwaʃ* /el/ more/most noisy.

اتدوش *ʕitdawaʃ or ʕiddawaʃ* /vi/ to be irritated, be bothered, be troubled. -iva *mitdiwiʃ*.

اندوش *ʕindawaʃ* = *ʕitdawaʃ*. -iva *mindiwiʃ*.

د و ش [2]
دوش *dooʃ* <T *döş*> /n/ rib-cut (of meat).

د و ط
دوطة *dooṭa* <It *dote*> /n pl *-aat*/ *[Chr]* dowry. - also *duṭṭa, doota*.

د و غ
داغ *daaɣ* <poss Copt>: *gaab daaɣ(-u)* to knock the living daylights out of (s.o.).
دوّغ *dawwaɣ* /vt/ to wear out, exhaust, consume. *ɋaswit l-ʕayyaam dawwaɣit-ni* hard times got me down. - vn *tadwiiɣ*; ava/pva *midawwaɣ*.
مدوّغ *midawwaɣ* /adj */ sophisticated, hardened by experience. *da raagil midawwaɣ ma-yustahan-ʃ[i] bii* he is a hard nut, not to be trifled with.
اتدوّغ *ʕitdawwaɣ* or *ʕiddawwaɣ* /vi/ to be worn out, be exhausted, be consumed. - iva *mitdawwaɣ*.

د و ق [1] see also ز و ق [2]
ذاق، داق *ðaaɋ[1] (u)* /vt/ **1** to taste. *duuɋ ɋabl[i] ma tiftiri* taste before you buy. ‖ *ʕilli ma-yduuɋ il-murr[i] ma-yiɣraf il-ɦilw* ≈ only after experiencing hard times can one appreciate good fortune. - *duɋt il-ɦilw[i] wil-murr* ≈ I've tried everything. - *ɋaalit yaama l-ɦalaawa ɦilwa*. - *ɋaalu duɋtii-ha* She said 'How sweet the confection is!' They said 'Have you tasted it?' (applied to one who passes judgement on others without first-hand knowledge). - *yaama tduuɋ ɛala lsaan-ak* ≈ you'll have to go through a lot! you'll have much to experience. **2** to appreciate. *yiduuɋ il-ʕalwaan* he has colour sense. - vn *dooɋ, dawaɋaan, diwaaɋa, dawaaɋa*; ava *daayiɋ*.
ذوّاق، دوّاق *dawwaaɋ* /n */ taster. *ʕir-rakk[a] ɛad-dawwaaɋ [vendor's cry]* (it's up to the taster) ≈ taste them and see!
مذاق، مداق *madaaɋ* /n/ taste. *ʕil-waṣf[i] miʃ kifaaya ʕir-rakk[a] ɛal-madaaɋ* it's not enough to describe (the food to me); it's the taste that matters.
انداق *ʕindaaɋ* /vi/ to be tasted. - iva *mindaaɋ*.
اتداق *ʕitdaaɋ* or *ʕiddaaɋ* = *ʕindaaɋ*. - iva *mitdaaɋ*.
ذوّق، دوّق *dawwaɋ* /vt/ to cause to taste. *ʕadawwaɋ-ak minnu ɦitta* I'll give you a bit of it to taste. ‖ *ʃawwaɋt-i-ni wala dawwaɋt-i-ni [prov]* you tantalize me with things that are not in your power to give. - vn *tadwiiɋ*; ava/pva *midawwaɋ*.

د و ق [2]
دوق *dooɋ* <Engl> /n pl *-aat*/ duke.
دوقة *dooɋa* /n pl *-aat*/ duchess.
دوقيّة *doɋiyya* /n pl *-aat*/ duchy.

د و ك
دوكة *dooka[1]* /n/ uproar, din, tumult. *miin ɛaamil id-dooka di barra* who is making that noise outside? *xuduu-hum fi-dooka la-yixlibuu-ku* ≈ overwhelm them with bluster lest they defeat you (said to one who monopolizes or shouts in a discussion). *ɛamliin dooka w-dabaka ɛal-faaɋi* they are causing a hullabaloo for nothing.
دوّك *dawwik* /vi/ to make (loud) noise. *ʕir-radyu dawwik ɛalayya* the radio overwhelmed me with its blaring. - vn *tadwiik*; ava *midawwik*.
اتدوّك *ʕitdawwik* or *ʕiddawwik* /vi/ to be overwhelmed by noise, be shouted down. - iva *mitdawwik*.

د و ك ا
دوكاه *dooka[2]* <P *du-gâh*> /n/ *[mus]* the note D.

د و ك و
دوكو *duuku* <trade n *Du [Pont] Co*> /n/ paint with which cars, refrigerators etc. are sprayed, body paint. *maɦall[i] duuku* paint-spraying workshop. ‖ *warniif duuku* car polish.

د و ل [1]
دولة *dawla* /n pl *duwal, diwal, dawlaat*/ nation, state. *mizaniyyit id-dawla* the national budget. ‖ *ʕid-duwal il-kubra* (or *il-ɛuẓma*) the major powers. - *ṣaaɦib id-dawla [obsol]* title of the Prime Minister. - *ʕirɋuṣ lil-ɋird[i] f-dawlit-u [prov]* dance for the ape in his kingdom. - *ʕil-ʕayyaam duwal [prov]* life is full of ups and downs.
دولي *dawli, duwali* /adj */ international.
دوّل *dawwil* /vt/ to internationalize. - vn *tadwiil*; ava/pva *midawwil*.
تدويل *tadwiil* /n/ internationalism.
اتدوّل *ʕitdawwil* or *ʕiddawwil* /vi/ to be internationalized. - iva *mitdawwil*.
مداولة *mudawla* /n pl *-aat*/ *[leg]* consultation (between judges before passing sentence). *ɤurfit il-mudawla* judges' retiring room. *ʕil-ɦukm[i] baɛd il-mudawla* judgement will be pronounced (directly) after consultation.
اتداول *ʕitdaawil* or *ʕiddaawil* /vi/ **1** *[leg]* to consult together (of judges, to reach a decision or a sentence). **2** to be in circulation, be current. - vn *tadaawul*; ava *mutadaawil*.
متداول *mutadaawalʔ* /adj/ current, in circulation, prevalent.

د و ل [2] see د ا : *dool, dooli, doola, doolat, doolak, doolan*

د و م [1]

دام *daam*[2] *(u)* /vi/ to last, endure, persist. *zibuun daayim lil-maḥaṭṭa* a permanent customer of the station. ‖*yiduum* (long may it last) ≈ may you always be well enough off to give to others (said to a host after eating or drinking, or on receipt of a gift or favour). -*yiduum faḍl-ak* may your bounty last (conventional reply to *ʕitfaḍḍal*). -*daamit ḥayaat-ak* may you live forever (conventional reply to *sufra dayma*). -*ɛala d-dawaam* for ever and always. -*dawaam il-ḥaal min il-muḥaal [prov]* ≈ nothing lasts for ever. -*ʕid-dawaam li-llaah* immortality is for God (alone) (said in consolation at funerals). -*sufra dayma* ≈ may your table always be laden (said by a guest on finishing a meal). -*ʕid-daaʕimit il-batuliyya [Chr]* Ever Virgin (epithet of the Virgin Mary). -vn *doom, dawaam*; ava *daayim, daaʕim*↑.

¶ *ma-daam* /occurs both inflected and non-inflected, w conj function/ as long as, since. *ʕana ḥ-aftaḥ-ha ma-dumt*[i] (or *ma-daam*) *ʕinta labxa kida* I'll open it, since you're so clumsy. *fiiha ʕeeh ma-daamit* (or *ma-daam*) *hiyya ɛagbaa* what's wrong with it, so long as he's pleased with her. see further under م د ا م [2]

يديم *yidiim* /vt, imperf and imper only/ to perpetuate (of God). *ya rabb*[i] *diim il-maḥabba ɛaleena* O Lord, make our (brotherly) love last forever!

دايم *daayim* /n/ Everlasting One (epithet of God).

¶ *dayman* **1** /adv/ always. *ʕis-sitt*[i] *minnina dayman miḥtaaga l-raagil* we women always need a man. *dayman b-awzin il-laḥma min ɣeer waraq* I always weigh the meat unwrapped. **2** /interj/ ≈ may your bounty last (said to a host after eating or drinking).

أدوم *ʕadwam* /el/ more/most lasting.

دوّامة *dawwaama* /n pl *-aat*/ **1** whirlpool. ‖*laqeet nafs-i f-dawwaamit if-fuxl* I found myself up to my neck in work. **2** whirlwind.

دوّم *dawwim* **1** /vt/ to whirl, cause to turn, spin or rotate rapidly. *ʕin-nawwa dawwimit il-ɣaarib* the high wind whirled the boat around. **2** /vi/ to whirl, spin, rotate rapidly. -vn *tadwiim*; ava/pva *midawwim*.

داوم *daawim* /vi/ to continue, persevere. *bi-ndaawim ɛala r-rayy*[i] *kull*[i] *ʕusbuɛeen* we continue to irrigate every two weeks. -vn *midawma*; ava *midaawim*.

استدام *ʕistadaam* /vi/ to continue, remain. *ʕil-maraḍ istadaam ɛala kida ʃahreen* the illness continued like this for about two months. ‖*ʕawaamir mustadiima [mil]* standing orders. -*sulfa mustadiima [admin]* advance cash (for operational expenditure). -*zarɛ*[i] *mistadiim* perennial crops. -vn *ʕistidaama*; ava *mistadiim, mustadiim*.

د و م [2]

دوم *doom* /coll n/ **1** doum-palm(s) (Hyphaene thebaica). **2** fruit(s) of the doum-palm.

دومة *dooma* /unit n, pl *-aat*/ **1** a doum-palm. **2** a single doum fruit.

د و ن [1]

دون *duun* /adj invar/ low, wretched. *ʕil-mahiyya duun* the pay is miserable. *raagil duun* a scoundrel. *da duun id-duun* he's the lowest of the low.

¶ *bi-duun* without. *bi-duun sabab* for no reason. *ʃagsaam bi-duun ʕiḥsaas* bodies without feeling. -*min duun* (1) (also *duunan ɛan*) in contradistinction to, as in *ʕinti min duun in-naas kiwayyisa* you alone are good, *bi-yifrabu kunyaak min duun iz-zabaayin* they out of all the customers are the only ones who drink cognac. (2↓) without, as in *maɛɣuul ḍarabit-ak min duun sabab* is it conceivable that she hit you for no reason?

استدون *ʕistadwin* **1** /vt/ **1a** to select for meanness or baseness. **1b** to consider mean or base. *ʕana stadwint*[i] *nafs-i fil-ɛamla di* I despised myself for this act. **2** /vi/ to behave basely or despicably. -ava *mistadwin*.

د و ن [2]

ديوان *diwaan* /n pl *dawawiin*/ **1** (loosely) any government office or department. *diwaan ɛaamm* headquarters (of a government department). **2** compartment (in a train). **3** anthology (of poems). **4** *[mus]* octave. *ʕid-diwaan il-ʕawwil* the lowest octave on any instrument. *diwaan kibiir* a major scale. *diwaan ṣuɣayyar* a minor scale. **5** *[magic, Isl]* realm of spirits. *ʕahl id-diwaan* (good) spirits. ‖*raaḥ fi-dawawiin-u* (1) he fainted. (2) he became lost in thought. (3) he fell into a deep sleep.

ديوانى *diwaani* /n/ **1** ornate calligraphic style of Ottoman origin. **2** *[obsol]* government coin.

دوّن *dawwin* /vt/ **1** to record, enter (in a book etc.). *dawwin ʕaqwaal-u w-maḍḍaa ɛaleeha* he took down his testimony and made him sign it. **2** *[mus]* to notate. -vn *tadwiin*; ava/pva *midawwin*; pva *mudawwan*↑.

اتدوّن *ʕitdawwin* or *ʕiddawwin* /vi/ **1** to be recorded, be noted down. **2** *[mus]* to be notated. -iva *mitdawwin*.

د و ه
دو *dooh* (also *doo*[2]) <P *dû*> /n pl *-aat*/ two (in dice etc.).

د و و see د ا : *dawwa, dawwat, dawwak, dawwan*

د و ى [1]
دوا، دواء *dawa* /n pl *ʕadwiya*/ medicine, remedy. *ḫ-aktib lukum dawa ymawwit il-mikroob* I'm going to prescribe you a medicine to kill the germ. *ʕiṣ-ṣabr[i] ʕaḫsan dawa* patience is the best cure. *ʕid-daaʕ it-tifis lii ʕid-dawa n-nigis [prov]* a nasty disease requires a foul medicine. ‖*dawa ṣaraṣiir* substance for killing cockroaches.
داوى *daawa* /vt/ to treat, cure. -vn *midawiyya*; ava *midaawi*.
اتداوى *ʕitdaawa* or *ʕiddaawa* /vi/ **1** to seek a cure. **2** to be cured, be treated. -ava/iva *mitdaawi*.

د و ى [2]
يدوى *yidwi* /vi, imperf and imper only/ to resound, make a ringing sound. *widaan-i b-tidwi* my ears are whistling. ‖*lamma tidwi* not even if you cry to the Heavens! -*nizil yidwi* he fell flat! -*ʕidwi* what a thrashing! (said, e.g., when the speaker is watching a fight). -*ʕid-dayy[i] fil-widaan ʕaktar miṣ-siḫr [prov]* constant repetition of an idea in someone's ears is more effective than magic. -vn *dayy, dawy*; ava *daawi*.
دوّى *dawwaʕ* /vi/ to make a ringing sound, reverberate. *lissa bi-tdawwi fi-wdaan-i* it is still ringing in my ears. -ava *midawwi*.

د و ى [3]
دواة، دواية *dawaaya*[2] (also *dawaayit ḫibr*) /n pl *-aat, diwy, duwy*/ inkwell, inkpot.

د و ى [4] see د و ا ى : *dawaaya*[1]

د و ى ك
دويكة *diweeka: diik id-diweeka* ≈ cock of the walk.

د ى ا ز see د ى ى ز

د ى ا ك ن
دياكن، ذياكن *diyaakun* (also *ziyaakun*) <Gr *diakonos*> /n pl *-aat*/ *[Chr]* deacon, a grade in the hierarchy of the Coptic church.
دياكنيّة، ذياكنيّة *diyakuniyya* /n/ *[Chr]* organization of deacons working as preachers in country districts.

د ى ب
ديب، ذئب *diib* /n pl *diyaaba, diyaab, diyʕba*/ **1** dieb, jackal. ‖*ʒinab diib* black nightshade (Solanum nigrum). -*miʃ ḫa-tgiib id-diib min deel-u* ≈ what you're doing is no big deal (said in disparagement of s.o.'s efforts). **2** wolf. *ʕin ʒiʃt[i] naʒga takl-ak id-diyaaba [prov]* (if you live the life of a sheep, you'll be devoured by wolves) ≈ the weak must perish.
دياب *diyaab: diyaab ibn[i] ɣaanim* the enemy of the folk hero Abu Zayd.

د ى ب ز –
ديابزون *dayabzoon* <Fr *diapason*> /n pl *-aat*/ pitch-pipe.

د ى ث see د ى س

د ى خ see د و خ

د ى د ب – see د د ب ا ن : *didabaan*

د ى ر [1]
دير *deer* /n pl *ʕadyira, diyíra, ʕadyura, duyúra*/ monastery, convent.
ديّارة *dayyaara*[2] /n/ monastic community.

د ى ر [2] see د و ر : *daayir, dayra, dayri, dayyaara*[1], *dayyar, ʕitdayyar, mustadiir*

د ى ز (1)
ديز *diiz*[1] /n/ *[bot]* type of tall grass (Scirpus tuberosus).
ديز *diiz*[2] <T *diz*>: *ʕirkaʒ diiz* kneel down.

د ى ز [2] see د ى ى ز : *diyeez*

د ى ز ل
ديزل *diizil* <Engl> /n/ **1** /pl *-aat*/ diesel engine. *ʕalaat diizil* diesel engines. **2** /no pl/ diesel oil.

د ى س
ديّوث *dayyuus* /n/ wittol.

د ى ف ر –
دايافرام *diyafraam* <Engl> /n pl *-aat*/ contraceptive diaphragm.

د ى ق
ضاق *daaq*[2] *(i)* /vi/ to become narrow, close in. *ʕil-villa btaʒt-i daaqit ʒalayya* my villa became (too) cramped

for me. *daaqit biyya l-ħaala* I was in straitened circumstances. ‖*daaqit id-dinya f-wiff-i* I have exhausted all possibilities. -*sidr-u daaq* he lost patience. -*ma daaqit ʕilla ma ftaragit* (or *furgit*) *[prov]* ≈ things get worse before they get better. -vn *diiq, dayaqaan*; ava *daayiq*.

ضيقة *diiqa* /n pl -*aat*/ (financial) strait, (financial) crisis. *xud il-qirfeen dool fukk*[i] *diqt-ak biihum* take this money and ease your indigence with it.

ضيّق *dayyaq*[1] /adj */ narrow, tight. *fawaariɛ dayyaqa* narrow streets. ‖*bi-riiħ dayyaq [naut]* close-hauled. -*muxx-a-ha dayyaq* she is narrow-minded. -*raagil xulq-u dayyaq* an impatient man. -*qurt-u dayyaqa* he's dim-witted. -*rizq-u dayyaq* he has a hard time earning a living, he's unfortunate. -*ɛad-dayyaq* on a small scale, as in *ɛuzuuma ɛad-dayyaq* a small party.

أضيق ʕ*adyaq* /el/ narrower/narrowest, tighter/tightest.

ضيّق *dayyaq*[2] /vt/ to make narrow(er) or tight(er). ʕ*il-ɛimaara l-gidiida dayyaqit if-faariɛ* the new building made the street narrow. ‖*dayyaq riiħ-ak [naut]* haul close to the wind! -*dayyaq il-xinaaq ɛala* to harass. -*dayyaqt*[i] ʕ*axlaaq-i* you've exhausted my patience! -ʕ*inta ħa-tdayyaq id-dunya leeh* why are you being so obstructive? -vn *tadyiiq*; ava/pva *midayyaq*.

¶ *dayyaq ɛala* (1) to put in a tight corner, put pressure on, as in ʕ*iz-zaabiṭ qaɛad yidayyaq ɛalee li-xaayit ma ɛtaraf* the (police) officer kept pressurizing him until he confessed. (2) to be mean, miserly or stingy with, as in *goz-ha mdayyaq ɛaleeha f-kull*[a] *ħaaga nifs-a-ha fiiha* her husband is depriving her of everything she desires.

اتضيّق ʕ*itdayyaq* or ʕ*iddayyaq* /vi/ be made narrower. -iva *mitdayyaq*.

ضايق *daayiq* /vt/ to annoy, harass. *lamma tirkab il-ʕutubiis ma-tdayiq-f*[i] *ir-rukkaab* when you ride the bus don't irritate the passengers. -vn *midayqa*; ava *midaayiq*.

اتضايق ʕ*itdaayiq* or ʕ*iddaayiq* /vi/ to become annoyed, get fed up. *ma-titdayiq-f*[i] *minni* don't get annoyed with me. -ava *mitdaayiq*.

استضيق ʕ*istadyaq* /vt/ **1** to select for narrowness or tightness. **2** to consider (too) narrow or tight. ʕ*istadyaqit* ʕ*akmaam il-fustaan* she thought that the sleeves of the dress were too tight. -vn ʕ*istidyaaq*; ava *mistadyaq*.

[1] د ى ك

ديك *diik*[2] /n pl *diyuuk*/ **1** cock, rooster. *diik ruumi* turkey cock. ʕ*in naṭaq id-diik fukuk* ʕ*addii-k* only if the cock speaks will I sell to you on credit (no-credit notice). ʕ*id-diik il-faṣiiħ fil-beeda yṣiiħ [prov]* ≈ talent shows itself early. ‖*diik il-baraabir* the only son of a family with many daughters. -*diik id-diweeka* ≈ cock of the walk. **2** bantam-weight (in boxing).

ديكى *diiki: suɛaal diiki* whooping cough.

ديّك *dayyik* /vi/ to become pompous, become starchy. -vn *tadyiik*; ava *midayyik*.

استديك ʕ*istadyik* /vt/ **1a** to consider virile. **1b** to select for virility. **2** to consider pompous and bossy. — /vi/ **3** to behave in a pompous and overbearing manner. -ava *mistadyik*.

[2] د ى ك

ديك *diik*[3] /n/ euphemism for *diin* in abusive remarks. *yilɛan diik-ak* go to heck!

[3] د ى ك see د ا ك : *diik*[1]

[1] د ى ل

ديل، ذيل *deel* /n pl *diyuul*/ **1** tail. ‖*deel ħuṣaan* pony tail (hairstyle). -*mabrad deel il-faar* rat-tail file. -*deel il-kalb*[i] *ma yinɛidil wi-law ɛallaqu fii qaalib [prov]* (a dog's tail won't come straight even if they hang a brick on it) ≈ a leopard cannot change his spots. -*hiyya mqaṭṭaɛa s-samaka w-del-ha* ≈ her outrageous behaviour knows no bounds. -*fid-deel* bringing up the rear. -*nigma* ʕ*umm*[i] *deel* comet. **2a** hem, bottom edge (of a garment). ‖*ħaṭṭ*[i] *deel-u fi-snaan-u* he took to his heels. -ʕ*il-wad-da deel* ʕ*umm-u* that lad is tied to his mother's apron strings. **2b** train (of a skirt).

ديّل *dayyil* /vt/ to move to or leave at the rear. ʕ*ikminnu ṭawiil dayyiluu fi-*ʕ*aaxir il-faṣl* they moved him to the back of the class because he was tall. -vn *tadyiil*; ava *midayyil*.

اتديّل ʕ*itdayyil* or ʕ*iddayyil* /vi/ to moved to the rear, to be left at the rear. -iva *mitdayyil*.

[2] د ى ل

ديلة *diila: ħilt-i w-dilt-i* the only property I have.

د ى ل ى ن

ديولين *diyuliin* /n/ type of synthetic fibre, made into a wash-and-wear fabric.

د ى م see د و م : *yidiim, daayim, dayman*

د ى م ت ر

ديامتر *diyamitr, dayamitr* <Fr> /n pl -*aat*/ diameter.

[1] د ى ن

دان *daan*[1] *(i)* /vt/ to have (s.o.) in one's debt (financial-

ly). *ʕana dayn-u b-ɛaʃara gneeh* he owes me ten pounds. *ʕilli dayin-ni b-malliim yiigi yaxd-u* whoever I owe a millime to can come and get it. - vn ***deen***; ava *daayin*; pva *madyuun*.

دين *dayan (i)* = *daan*. - vn *deen, dayanaan*; ava ***daayin***; pva *madyuun*.

دين *deen* /n pl *diyuun*/ debt. *ʕana ṣaaḥib deen ɛaleek* you are in debt to me. ‖ *bi-yiʃtiri bid-deen* he buys on credit. - *kull-u salaf wi-deen [prov]* ≈ nothing ever goes unrewarded or unpunished, justice is always done in the end.

داين *daayin*[1] **1** /n */ creditor. **2** /adj/ *[bank]* in credit (of an account).

مديونيّة *madyuniyya* /n pl *-aat*/ debt, indebtedness.

ديّانة *dayyaana* /pl n/ creditors.

مدين *madiin* **1** /n */ debtor. **2** /adj/ *[bank]* overdrawn (of an account).

اندان *ʕitdaan* or *ʕiddaan* /vi/ to fall into debt. *ʕiz-zaman xallaa-ni tdant-i-lu* circumstances caused me to fall into debt to him. - ava *mitdaan*.

اندان *ʕindaan* = *ʕitdaan*. - ava *mindaan*.

اتدين *ʕitdayan* or *ʕiddayan* = *ʕitdaan*. - ava *mitdiyin*.

اندين *ʕindayan* = *ʕitdaan*. - ava *mindiyin*.

داين *daayan, daayin*[2] /vt/ to borrow from (s.o.), buy from (s.o.) on credit. *ma-xallaa-ʃ ḥadd*[i] *ma-dayn-uu-ʃ* he borrowed from absolutely everyone. *da-na mdaayin il-baqqaal wig-gazzaar wi-btaaɛ il-firaax* but I owe money to the grocer, the butcher and the chicken man. - vn *midayna*; ava *midaayin*.

اتداين *ʕitdaayan* or *ʕiddaayan*, *ʕitdaayin* or *ʕiddaayin* /vi/ to borrow money from each other. *lamma n-naas titḥiwig lil-fuluus titdaayin min baɛḍ-a-ha* when people are short of money they borrow from one another. ‖ *ʕana b-addaayan min ʕideen in-naas* I have no money of my own. - ava *mitdaayin*.

استدان *ʕistadaan, ʕistidaan* /vi/ to borrow, get into debt. *ɛumr-i m-astidiin* I never borrow money. - vn *ʕistidaana*; ava *mistidiin*.

د ی ن [2]

دين *diin* **1** /n pl *ʕadyaan*/ religion. *ʕid-diin il-ʕislaami* the Islamic religion. *wi-diin-i* by my faith! (a strong oath). ‖ *ya diin-i ɛala kida* how very nice! - *ya diin in-nabi* wild exclamation of astonishment. - *ya diin ik-kalb* ≈ you bloody bastard! - *yilɛan diin-ak* ≈ God damn you! - *ḥ-aṭallaɛ diin-ak* ≈ I'll beat hell out of you, I'll give you hell. - *ʕin-naas ɛala diin muluk-hum [prov]* ≈ people follow the example of their leaders. - *ʕig-gawaaz nuṣṣ id-diin* to marry is to fulfil half of one's religious obligations. *naweet ʕakammil nuṣṣ*[i] *diin-i* I decided to get married. **2** /intensifying element/ *huwwa ṭaaliɛ diin ʕaymaan ʕahl-u fiʃ-fuxl* he's working fit to bust a gut. *ḥittit diin ṭabaq dandurma* an absolutely super dish of ice cream. ‖ *li-ʕabu diin(-u)* to the furthest limit, to the extreme, to the full.

ديني *diini* /adj/ religious. *laɡnit iʃ-fuʕuun id-diniyya* the Committee for Religious Affairs.

ديانة *diyaana* /n pl *-aat*/ religion, confession, sect.

اتديّن *ʕitdayyin* or *ʕiddayyin* /vi/ to become religious, become pious, make a show of being religious. - ava *mitdayyin, mutadayyin*.

د ی ن [3]

دان *daan*[2] *(i)* /vt/ to convict. *danit-u ʕil-maḥkama* the court convicted him.

ديّان *dayyaan* /n/ Judge (epithet of God).

دينونة *daynuuna* /n/ Judgement. *yoom id-daynuuna* the Day of Judgement. *ʕid-daynuuna l-ɛuẓma* the Last Judgement.

أدان *ʔadaan*[2] = *daan*[2]. - vn *ʕidaana*; ava *mudiin*; pva *mudaan*.

د ی و ل

دياولو *diyawlu* <It *diavolo*>: *wala diyawlu* nothing (else) whatsoever, as in *wala nigiḥ wala diyawlu* he didn't succeed or come anywhere near it.

د ی ی [1]

دية *diyya* /n pl *-aat*/ ransom. ‖ *ma-luu-ʃ diyya* (1) he is of no significance, he is worthless (2) he is an outlaw. - *ʕilli tiɛraf diyyit-u ʕiqtil-u [prov]* ≈ when you know the consequence of a deed, go ahead and act decisively.

د ی ی [2]

د ی ی see ا د : *diyya, diyyat, diyyak, diyyan*

د ی ی [3]

د ی ی see د و ی [2] : *dayy*

د ی ی ز

دياز *diyeez* <Fr *dièse*> /n pl *-aat*/ *[mus]* sharp.

ذ

زك² see ذكو

زا see ذلك

زلل³ see ذلل

زمر² see ذمر

زمم² see ذمم

زنب² and دنب see ذنب

زهب¹ and دهب² see ذهب

زهل see ذهل

زهن see ذهن

زو see ذو

زات see ذوات

دوب¹ see ذوب

دود² see ذود

زوق² and دوق see ذوق

زو see ذى

دياكن see ذياكن

زيع see ذيع

ديل¹ see ذيل

زات see ذات

زال see ذال

دىب see ذىب

دبب⁴ see ذبب

دبح¹ see ذبح

زبزب see ذبذب

دبل³ see ذبل

دخر see ذخر

در see ذر

زرر² see ذرر

درع² see ذرع

درى³ see ذرى

زعر² see ذعر

زعن see ذعن

زفر¹ see ذفر

دقن see ذقن

زكر¹ and دكر see ذكر

زكصل - see ذكصل -

ر

ر ا
راء، راء *raa* /fem n/ tenth letter of the Arabic alphabet. - also *raaʕ, rih*.

ر ا ء
راء، راء *raaʕ* /fem n, pl *-aat*/ tenth letter of the Arabic alphabet. - also *raa, rih*.

ر ا ب ش
رابش *raabiʃ* <Engl *rubbish*> /coll n/ **1** *[obsɒl]* articles discarded by the British army and sold on the Egyptian market. *bi-yiʃtaɣal fir-raabiʃ* he works in the trade in army cast-offs. **2** any discarded articles.

ر ا ح see ر و ح: *raaḥ, raaḥa*

ر ا خ ر see ر خ ء: *raaxar*

ر ا س see ر ء س: *raas*

ر ا ش ن
راشن *raaʃin* <Engl> /n/ *[naut]* ration.

ر ا ق
راق *raaq*[1] /n pl *raqaat*/ layer. *niruṣṣ[i] fiṣ-ṣaniyya raaq laḥma w-raaq ruqaaq* we put a layer of meat and a layer of *ruqaaq* in the baking dish. ‖ *xadit minnu raqaat* it wore him out.
راقة *raaqa* = *raaq*.

ر ا ك ت
راكت *raakit* <Fr *raquette*> /n/ paddle-ball.

ر ا م
رامة *raama: ʃibn[i] raama* epithet of the Prophet Muhammad.

ر ا ى (1)
راى *raay*[1] <Copt> /n/ Alestes dentex, Alestes batemose, a type of Nile fish.
راى *raay*[2] /n/ *[zool]* ray, skate.

راى[2] see ر ء ى: *raaya*

ر ا ى ش
رايش *raayiʃ* /n/ **1** burr (on metal), ragged edge (to a piece of material). **2** metal filings or shavings (especially as impurities, e.g., within the working parts of a mechanism).

ر ء
رئة *riʃa* /n pl *-aat*/ lung. *saraṭaan ir-riʃa* lung cancer. رئوى *riʃawi* /adj/ pulmonary. *ʃiltihaab riʃawi* pneumonia.

ر ء س
رأس *raʃaṣ↑ (a, u)* /vt/ **1** to head, be head of. *huwwa b-yirʃas il-farrafiin* he is in charge of the office servants. **2** to preside over. *raʃas l-igtimaaɛ* he chaired the meeting. - vn *riyaasa, riʃaasa↑*; pva *marʃuus*.
رياسة، رئاسة *riyaasa, riʃaasa↑* /n/ leadership, chairmanship, presidency. *bi-yitlammu l-fuqaha maɛa baɛḍii-hum bi-ryaasit fex-hum* the Koran reciters gather under the leadership of their sheikh. *ʃil-markib taḥt[i] ryast-i* the ship is under my command.
مرؤوس *marʃuus* /n */ subordinate.
رأس، راس *raas, raʃs↑* /fem n, pl *ruus, ruʃuus↑*/ **1** head (of a person or animal). *masnad raas* head rest. *raas ḍaani* **(1)** a sheep's head (for eating). (2) stupid person, muttonhead. *ʃixsil raas-ak* wash your hair! *raas*

baruuka wig-stand. ‖*raas bi-raas* on an equal footing, as in *ħa-niftaxal raas bi-raas* we shall work as equal partners, *bi-tiɛmil ras-ha b-raas-i* she behaves as though she's my equal, she confronts and defies me. -*raaħ raas fi-raas* to faint. -*raas-u w-ʕalf^{i} seef* (or *barṭuuʃa [abus]* or *wi-baraṭiif il-balad [abus]*) ≈ wild horses could not make him (do something), as in *raas-u w-ʕalf^{i} seef ma-ybiɛ-haa-ʃ naaqiṣ ɛan kida* he absolutely refuses to sell it any cheaper. -*lamma yuqaɛ l-faas fir-raas* ≈ at the point of no return. -*raas-u fis-sama* he is proud. -*min is-saas lir-raas* from head to toe, from top to bottom. -*xalla ras-na ɛalya l-fooq* he made us proud of him. -*xalla ras-na miṭaṭiyya* he made us ashamed of him. -*fooq raas* born (immediately) after, as in *hiyya fooq raas-i ɛala ṭuul* she is the next oldest in the family after me, *bi-tgiib ʕawlaad fooq raas baɛḍ* she has children one after the other. -*raas-i bi-tliff* I am dizzy, I am in a spin. -*baɛd^{i} raas-i ma ħadd^{a} ɛaaf* after me, the deluge. -*raas il-ɛabd* long-handled ceiling brush. -*ɛala raas-u riiʃa [sarc]* he's a big-shot. -*maaʃi ɛala raas-u* he is living irresponsibly. -*min taħt^{i} raas* attributable to (of fault, blame etc.), as in *kull illi ħaṣal min taħt^{i} raas-ak* all that happened is your fault. -*min raas li-rigl* totally, as in *ʕinta ɤalṭaan min raas-ak li-riglee-k* you're completely wrong. -*miʃ ɛaarif raas-u min riglee* ≈ he doesn't know whether he's coming or going. -*ɛala ɛeen-i w-raas-i* or *ɛala raas-i min fooq* certainly, with pleasure. -*maṭraħ ma tħuṭṭ^{i} raas-ak ħuṭṭ^{i} rigl-ak* ≈ do your worst (you don't scare me)! -*raas ɤanam* one of a herd of sheep and goats. -*ʕabu raas* one suffering from ringworm. -*ʕabu r-ruus* epithet for one with a large head. **2** top part or business end. *raas kursi* the top (of the back) of a chair. *raas ħarba* spearhead. *raas ʃakuuʃ* head of a hammer. *raas musmaar* head of a nail. *raas siriir* head of a bed. *ɛala raas ħarit-na* at the top of our alley. *raas ṭoom* a head of garlic. ‖*raas sukkar* sugar loaf. -*raas xaṣṣ* stem of a lettuce. -*raas ħagar* breakwater. **3** beginning, starting point. *bi-yɛidd is-sibħa min ras-ha* he counts the prayer beads from the beginning. *raas is-sana* New Year's day. **4** top (of a hierarchy). *ʕil-ʕidaara ɛala ras-ha l-ɛamiid* the administration is headed by the dean. *raas manṣar [obsol]* leader of a band of thieves. **5** heading, title. *katabt^{i} raas il-mawḍuuɛ ɛaṣ-ṣabbuura* I wrote the title of the topic on the blackboard. **6** leading personality. *hiyya ʕakbar raas fil-ħitta* she's the most influential person in the neighbourhood. **7** cape, promontory. *raas il-barr* Ras el-Barr, promontory and resort to the west of the eastern estuary of the Nile. *raas it-tiin* Ras et-Tin, promontory at Alexandria, site of a former royal summer palace. **8** *[carp]* rail. *raas baab* rail of a door. **9** headband (of a bridle). **10** boom (of a crane). see further under ^{1} ر و س

¶ *raʕsan↑* /adv/ directly, immediately.

رأسي *raʕsi↑* /adj/ vertical.

روسيّة *rusiyya* /n pl *-aat*/ blow delivered with the forehead (against the forehead of another). *ḍarab-u* (or *ʕiddaa-lu) rusiyya* (or *bir-rusiyya*) he butted him with his head.

رئيس *raʕiis↑* /n pl *ruʕasa, ruʕasaaʔ*/ chief person, head, leader. *raʕiis fariiq* team captain. *raʕiis qism* department head. *raʕiis maglis il-ʕidaara* the chairman of the board. *raʕiis wuzara* Prime Minister. *raʕiis iggumhuriyya* the President of the Republic.

رئيسي *raʕiisi* /adj */ principal, main. *ʕil-bayanaat ir-raʕisiyya* the most important items of information. *maktab raʕiisi* main office. *ṭariiq raʕiisi* main road. ‖*ɛinwaan raʕiisi* headline (in a newspaper).

ريّس *rayyis* /n pl *ruyasa*/ **1** man in charge of a group of workers, foreman, boss, chief. **2** captain of a boat. ‖*ɛuqdit ir-rayyis [naut]* boatswain's hitch. **3a** title of, and form of address or reference to, (1) any male not wearing military or religious dress or smart western clothes. (2) a waiter and any male who may be referred to as *ʕusṭa* (q.v.). **3b** *ʕir-rayyis* informal title of, and form of address or reference to, the President of Egypt.

ريّسة *rayyisa* /n pl *-aat*/ woman in charge of a group of workers, forewoman.

اتريّس *ʕitrayyis* /vi/ to be in charge (of a group of workers). -ava *mitrayyis*.

ر ء س م ل see ر س م ل: *raʕsimaal, raʕsimaali, raʕsimaliyya*

ر أ ف

رأف *raʕaf (a)* /vi/ to be compassionate, show mercy. -vn *raʕfa, raʕafaan*; ava *raaʕif*.

رأفة *raʕfa* /n/ compassion, mercy. *ʕir-raʕfa bil-ħayawanaat* kindness to animals. ‖*lagnit ir-raʕfa [acad]* university committee that gives the final ruling on borderline or just below borderline examination papers.

رؤوف *raʕuuf* /n/ Gracious One (epithet of God).

ر ء م see ^{1} ر ى م

ر ء و see ر ء: *riʕawi*

ر ء ى see also ^{1} ر و ى

رأى *raʕa (yara)* /vt/ **1** to see in a dream or vision. *raʕeet*

ʕabuu-ya laabis ʕabyaḍ f-abyaḍ I dreamt that I saw my father dressed all in white. **2** *[frozen contexts]* to see, behold. *la ʃuft-u wala ɣeen-i raʕit-u* I didn't see hair nor hide of him. **3**↑ to see (s.th.) as best, consider (s.th.) right. *ʕilli taraa ʕiɣmil-u* do whatever you think best. - vn *raʕy, ruʕya*; pva *marʕi*.

¶ *ya tara* or *ya hal tara* I wonder. *ma-gaa-ʃ leeh ya tara* I wonder why he didn't come.

رأى *raʕy* /n pl *ʕaraaʕ*/ opinion, view. *ʕir-raʕy il-ɣaamm* public opinion. *raʕy[i] qanuuni* legal opinion. *ʕana raʕy-i niɣmil qurɣa* I think we should draw lots. *bi-ymaʃʃi raʕy-u ɣaleena* he forces his opinion upon us. ‖*ɣala raʕy* according to the view of, according to the saying of, as in *ɣala raʕy-ak illi yisraq maɣruuf ʕâmr-u* as you say, it's well known what happens to those who steal, *ɣala raʕy il-masal* as the proverb says. - *ʕana min raʕy-ak* or *raʕy-i min raʕy-ak* I share your opinion. - *ʕeeh raʕy-ak ʕinn* ... (1) what do you say to the fact that ...? as in *ʕeeh raʕy-ak ʕinnak ma-tifham-ʃ ḥaaga* (1) what would you say if I told you that you don't understand a thing? (2) can you credit that ..., just imagine that ...? (sometimes used defiantly), as in *ʕeeh raʕy-ak ʕinni ma-tɣaʃʃet-ʃ[i] lissa* can you imagine? I haven't had supper yet. - *lu raʕy[i] gamiil* he comes up with good ideas.

رؤية *ruʕya[1]* /n/ **1** seeing, sighting. *ʕiḥna fi-ntiẓaar ruʕyaa-k* we're looking forward to seeing you. **2** *[Isl]* sighting of the new moon, which marks the first day of a month. *sabatit ir-ruʕya* the sighting (of the new moon) was confirmed.

مرئى *marʕi*↑, *marʕi* /adj/ visual. *ʕil-funuun il-marʕiyya* the visual arts.

راية *raaya* /n pl *-aat*/ pennant, small flag.

رؤيا *ruʕya[2]* /n/ vision, dream. *ʃaaf ruʕya wiḥʃa (fil-manaam)* he had a bad dream. ‖*sifr ir-ruʕya [Chr]* Book of Revelation, Apocalypse.

مراية *miraaya* /n pl *-aat*/ **1** mirror. ‖*fil-wiʃʃ[i] mraaya w-fil-qafa sillaaya [prov]* (a mirror to the face and a thorn to the back of the neck) ≈ he is pleasant with you to your face, but stabs you in the back. - *miraayit il-ḥubb[a] ɣamya [prov]* ≈ love is blind. - *miraaya siḥriyya* kaleidoscope. **2** opening in the floor of a baker's oven through which the heat enters from the fire-chamber. **3** backboard (e.g., of a boat or a cart). **4** area on the neck of an *ɣuud* where the fingers stop the strings (see Pl.J, 10).

اتراءى *ʕitraaʕa* /vi/ it occurred (to one's mind). *ʕiɣmil ka-ma yitraaʕa liik* do as you think (best). - ava *mitraaʕi*.

ارتأى *ʕirtaʕa* /vt/ to consider right or suitable. - ava *mirtiʕi*.

ر ب ا see ر ب و : *riba*

¹ ر ب ب

ربّ *rabb[1]* /n/ **1** Lord God. ‖*ya rabb* O Lord (protect us)! (expression of dismay, anxiety or resignation). - *ɣuul ya rabb* ≈ rely on God! - *ya rabb[i] yingaḥ* ≈ I hope to God he succeeds. - *rabb[i] hina rabb[i] hnaak* (the God of here is the God of there) all places are as good as each other. - *raagil bitaaɛ* (or *bi-yiɣraf*) *rabb-i-na* a pious man. - *ʕil-ḥikaaya di btaaɣit rabb-i-na* the matter is in God's hands, there is nothing any man can do about it. - *rabb-ak rabb[i] quluub* the Lord looks on the heart. - *liina rabb ism-u l-kariim* we have a Lord whose name is the Generous One (expression of despair or helplessness or, addressed to another, of consolation). **2** /pl *ʕarbaab*/ master. *rabb il-beet* (1) the Lord of the Kaaba, i.e. God. (2) the master of the house. *ʕarbaab iṭ-ṭariiqa* the leaders of the Order. ‖ *ʕarbaab il-ʕaḥwaal* Sufis with hidden spiritual powers. - *ya ʕarbaab kull[i] mṣiiba* you trouble-makers! **3** *ʕarbaab* /pl n in constr state/ the ones with. *ʕarbaab is-sawaabiq* those with previous convictions. *ʕarbaab il-ḥiraf* craftsmen, skilled workmen. *ʕarbaab il-maɣaʃaat* pensioners.

ربّة *rabba[1]*↑ /n pl *-aat*/ mistress. *rabbit beet* housewife. *rabbit il-beet* the mistress of the house.

ربّانى *rabbaani* **1** /adj/ pertaining to the Lord God. *ʕiṣ-ṣala r-rabbaniyya [Chr]* the Lord's Prayer. *raagil rabbaani* a pious man. **2** /adj invar/ God given, inscrutable. *ḥalaawa rabbaani* natural beauty. - /adverbially/ *ʕil-ḥikaaya di ḥaṣalit rabbaani* this affair came about for no apparent reason.

² ر ب ب

ربّ *rabb[2] (u)* /vt/ to beat (s.th.) of liquid consistency. - vn *rabb, rababaan*; ava *raabib*; pva *marbuub*.

ربّ *rubb* /n pl *rubuub*/ thickened fruit juice, fruit purée. ‖*rubb[i] suus* liquorice sweets or pastilles.

مربّى، مربّة *marabba* /n pl *-aat*/ jam. *marabbit naring* orange marmalade.

اتربّ *ʕitrabb* /vi/ to be beaten. - iva *mitrabb*.

انربّ *ʕinrabb* = *ʕitrabb*. - iva *minrabb*.

³ ر ب ب

ربابة *rabaaba, ribaaba* /n pl *-aat*/ musical instrument with one or two strings, with a small resonance box

usually made of coconut, held vertically and played with a bow, rebab (see Pl.J, 1). *faaʕir ir-rabaaba* singer who accompanies himself on the *rabaaba*. ‖*maafi b-rabaaba* he is telling the news to all and sundry.
رباب *rabaab, ribaab* /n/ collective of *rabaaba, ribaaba*.
رَبّاب *rabbaab, rabbaab* /n pl *rabbaaba, rabbaaba, rabbabiin*/ player of the *rabaaba*.

⁴ ر ب ب
رِبّة *ribba* /n/ *[agric]* **1** that part of the clover crop left to produce seed (and not cut for fodder). **2** /pl *ribab*/ crop or field of clover grown for seed.

⁵ ر ب ب
رِبَما *rubbama* (also *rubbatan*↓) /adv/ perhaps, possibly. *huwwa rubbama ykuun taʕbaan* perhaps he's sick. *rubbama nisyu* maybe they forgot.

– ر ب ب س
رِبّسوس *rubbisuus* /coll n/ liquorice sweet(s) or pastille(s).

– ر ب ب ك
روبابكيا *rubabikya, rubabikya* <It *roba vecchia*> /n/ cast-off household articles, junk. *bitaaʕ rubabikya* rag-and-bone man, junk peddler.

ر ب ب ي ت
رِبّيتا *rubbeeta* /n/ *[Chr]* guest master in a monastery.

ر ب ح
ربح *ribiḥ*↑, *rabaḥ*↑ *(a)* **1** /vt/ to make (a profit). *ribiḥt*ⁱ *fluus kitiir* I made a large profit. *rabaḥ il-biriimu* he won the first prize. **2** /vi/ to make a profit. *ʕid-dukkaan ribiḥ ʠawi* the shop did very well. *ʕilaah-i ma-tirbaḥ [women]* may you never prosper! - vn *ribḥ*; ava *raabiḥ, rabḥaan*.
ربح *ribḥ* /n pl *ʕarbaaḥ*/ **1** profit. *bi-yṭallaʕ filuus bir-ribḥ*↓ *[Isl]* he practises usury. **2** *ʕarbaaḥ* /pl n/ **2a** dividends paid on shares. **2b** dividends paid to workers in a public sector company from the profits of that company.
ربحيّة *ribḥiyya* /n/ profitability.
أربح *ʕarbaḥ* /el/ more/most profitable.
رباح *rabaaḥ: ʕiṣ-ṣabaaḥ rabaaḥ* ≈ let's sleep on it, tomorrow will be a better time (to consider the matter).
مربح *murbiḥ*↑ /adj/ lucrative, highly profitable.
ربّح *rabbaḥ* **1** /vt/ to cause to make profit. *ʕarabbaḥ-ak fil-beet ʕalfⁱ gneeh* I give you one thousand pounds' profit for the house. **2** /vi/ to lend money for profit. - ava *mirabbaḥ*.
استربح *ʕistarbaḥ* /vt/ to try to gain. *laazim tistarbaḥ riḍa ʕabuu-k* you must try to gain your father's favour. - vn *ʕistirbaaḥ*; ava *mistarbaḥ*.

ر ب ر ب
ربرب *rabrab* /vi/ to become plump, fill out. - vn *rabraba*; ava *mirabrab*.
ربريب *rubreeb* /n/ soft mud, mire.
ربريبة *rubreeba* /n/ pool or puddle of mud.

– ر ب ر ت
ريبورتاج *riburtaaj* <Fr> /n pl *-aat*/ reportage, news coverage.

ر ب س
ريبس *ribs* <Engl> /n/ *[text]* rep.

¹ ر ب ش
ربش *rabaʃ* <Engl *rubbish*>: *naas rabaʃ* worthless people, rabble, riff-raff.

² ر ب ش see ر ا ب ش: *raabiʃ*

ر ب ص
رابص *raabiṣ* /adj */ lying in wait, on the look-out.
اتربّص *ʕitrabbaṣ* /vi/ to be in wait, watch out (for s.o.). *bi-ytrabbaṣu l-ʕayyⁱ waaḥid gayyⁱ min ir-riif* they are on the look-out for anyone coming from the countryside. *gariimit it-tarabbuṣ* the criminal act of ambush. - vn *tarabbuṣ*; ava *mitrabbaṣ*.

ر ب ط
ربط *rabaṭ (u)* /vt/ **1a** to fasten, tie. *rabaṭ karafattit-u* he tied his tie. *rabaṭtⁱ ḥzaam-i* I fastened my belt. ‖*yiḥillⁱ w-yurbuṭ* to exercise power, act effectively and decisively, as in *la yḥillⁱ wala yurbuṭ* (he) is useless, (he) is ineffective. *ʕana miʃ ʠayz-u la yḥillⁱ wala yurbuṭ fil-ʠamaliyya* I don't want him to have anything to do with the business. **1b** to make fast, hitch, moor. *ʕilli ma-yurbuṭ bihimt-u tinsiriʠ minnu [prov]* he who doesn't tie up his beast gets it stolen. *ʕil-malayka wig-ginnⁱ marbuṭiin biz-zikr* the angels and jinn are held powerless by the dhikr. ‖*ʠuʠda rabṭ [naut]* link-tightening hitch. - *lanfⁱ rubaaṭ [naut]* boat that carries the mooring cable from a ship to the quay. **1c** to bind, tie up, bundle. *ʕurbuṭ iṭ-ṭard* tie up the parcel! **1d** to bandage. *rabaṭit-lu g-garḥ* she bandaged his wound.

2 to screw tight. *ʃurbuṭ il-faraamil* tighten the brakes! **3** to occupy, keep busy. *ma-ɋdirtʲ-ʃ ʃagii-lak ɛafaan iẓ-ẓuruuf rabaṭit-ni* I couldn't come to you because things kept me. **4** to determine, fix, specify. *rabaṭu ʃ-ʃuruuṭ* they agreed on the conditions. ‖*rabṭʲ kalaam* (or *lisaan* or *beeɛa* or *ʃittifaaɋ*) paying of an earnest or deposit to seal a deal. - *ʃiḍ-ḍabṭʲ wir-rabṭ* discipline. **5** to cause impotence in (e.g., a bridegroom) by magic. — /vi/ **6** to be fastenable, be attachable. *ʃil-musmaar da b-yurbuṭ fooɋ* that screw goes on top. **7** to make a connection, see a relationship. *bi-yurbuṭ been il-maɛlumaat ɛafaan yifham il-mawɋif* he relates all the information in order to understand the situation. *ʃiʃ-ʃaɛb il-maṣri b-yurbuṭ been il-farah wil-bayaaḍ* Egyptians associate white with festivity. **8** to come to a dead halt, stop completely. *ʃurbuṭ ɛandak* stop right where you are! *yiftaxal ṭuul in-nahaar wi-yiigi s-saaɛa xamsa w-yurbuṭ* he works all day and then, when it gets to five o'clock, he downs tools. **9** to lie in ambush. *rabaṭuu-lu fil-ɋaṣab* they lay in ambush for him in the sugar cane. - vn *rabṭ, rubaaṭ, rabaṭaan*; ava *raabiṭ*; pva *marbuuṭ*.

ربطة *rabṭa*[1] /n pl *-aat*/ **1** /inst n/ a tying, a binding, a fastening. — /also pl *rubaṭ*/ **2** bunch, bundle. *niɋlaɛ iʃ-ʃatl*[i] *wi-nrabbaṭ-u rubaṭ* we pull up the seedlings and tie them in bundles. ‖*bi-rabṭit il-miɛallim* including every single one, as in *xad-hum il-buliis bi-rabṭit il-miɛallim* the police took them all in. **3** knot. *rabaṭit rabṭa fil-ḥabl* she tied a knot in the rope. ‖*wisaam rabṭit is-saaɋ* the Order of the Garter.

رباط *rubaaṭ* /n pl *-aat, ʃarbiṭa, ribiṭa*/ **1** tie, tie-string. *gazma b-rubaaṭ* lace-up shoes. *rubaaṭ is-sitaara* curtain sash, tie-back. **2** bandage. **3** brake. **4** *[naut]* strake. **5** spell to induce impotence. **6** bond. *rubaaṭ muqaddas [Chr]* a holy bond (i.e. marriage).

رابطة *rabṭa*[2] /n pl *rawaabiṭ*/ **1** bond. *wilad-na humma r-rabṭa benatna* our children are the bond between us. **2a** social or academic association. *rabṭit ʃabnaaʃ ɋina* Sons of Qena Association (a club for those from Qena living in Cairo). **2b** guild, union. *ʃir-rawaabiṭ il-ɛummaliyya* the labour unions.

مربوط *marbuuṭ* /n/: *marbuuṭ id-daraga [admin]* salary bracket.

رِبّاطيّة *rubbaṭiyya* /n/ gang. *ɛamalu rubbaṭiyya ɛalayya* they ganged up on me.

مربط *marbaṭ* /n pl *maraabiṭ*/ hitching place for livestock, stable. ‖*marbaṭ il-faras* the heart of the matter, as in *ʃahu gibtʲ marbaṭ il-faras* you've hit the nail right on the head!

اتربط *ʃitrabaṭ* /vi/ passive of *rabaṭ*. - iva *mitribiṭ*.

انربط *ʃinrabaṭ* = *ʃitrabaṭ*. - iva *minribiṭ*.

ربّط *rabbaṭ* /vt/ to tie, fasten, bind etc. (a number of things, or a number of times in succession). *bi-nrabbaṭ it-tiil ḥizam* we tie up the hemp in bundles. *ʃil-muuna bi-trabbaṭ il-madamiik* the mortar binds the courses. *tarbiiṭ ɛarabiyya* the checking and tightening of loose screws and bolts on a car. - vn *tarbiiṭ*; ava/pva *mirabbaṭ*.

اتربّط *ʃitrabbaṭ* /vi/ **1** to be tied, be fastened, be bound etc. (of a number of things, or a number of times in succession). **2** to lie in wait. - ava/iva *mitrabbaṭ*.

رابط *raabiṭ* /vi/ to station oneself, take up one's stand, settle oneself in position. *rabiṭtᵃ ɛala baab ig-gaamiɛ* I stationed myself by the door of the mosque. *ʃig-geeʃ miraabiṭ fi-siina* the army has taken up position in Sinai. *ḥa-tiɛmil ʃeeh bukra.* - *ʃaraabiṭ fil-beet* 'What are you going to do tomorrow?' 'Just hang about at home.' ‖*ʃig-geeʃ il-muraabiṭ [obsol]* ≈ the territorial army. - vn *mirabṭa, muraabaṭa*↑; ava *miraabiṭ*.

ارتبط *ʃirtabaṭ*↑ /vi/ **1** to be linked, be connected, be related. *ʃil-mawḍuɛeen murtabṭiin bi-baɛḍ* the two matters are interlinked. **2** to enter an agreement, commit oneself. - vn *ʃirtibaaṭ*; ava *murtabiṭ*.

ارتباط *ʃirtibaaṭ* /n pl *-aat*/ **1** link, tie, connection, relation. *dimuuɛ-i ma-lhaa-ʃ irtibaaṭ big-gawaaz* my tears have nothing to do with marriage. **2** commitment. *ʃirtibaṭaat maliyya* financial commitments.

ر ب ع

ربع *rabaɛ (a, i)* /vi/ **1** to gallop (of a donkey). **2** *[joc]* to get going full-swing, get properly under way. - vn *rabɛ*; ava *raabiɛ*.

ربع *rabɛ* /n pl *ʃurbuɛ*/ *[obsol]* building divided into private apartments with a common courtyard for cooking etc. ‖*ɋayy ir-rabɛ* old and shabby (of a building). - *taḥt ir-rabɛ* historic district running west along the outside of the line of the Cairo city walls from Bab Zuweila.

ربعة *rabɛa* /n/ manuscript copy of the Koran in thirty volumes, usually kept in a box, and on which oaths are traditionally sworn in cases of serious dispute.

ربع *rubɛ* /n pl *ʃirbaaɛ, ʃirbaɛ*/ **1** one fourth, quarter. *rubɛʲ saaɛa* a quarter of an hour. *talatt irbaaɛ kiilu laḥma* three quarters of a kilo of meat. **2** one quarter of a *ḥizb* of the Koran. **3** *[mus]* quarter tone. **4** *[Chr]* four-line antiphonic verse from the liturgical hymns of the Coptic *tasbiḥa* (q.v.). **5a** unit of volume equal to four *ɋadaḥ* or half a *keela* (8.25 litres). **5b** vessel used to measure out one *rubɛ* of grain. **6** corner piece in tent

appliqué work (see Pl.H, 1).

ربعة *rubɛa* /n pl *-aat, -aat/* unit of volume equal to one quarter of an *ɋadaḥ* (0.516 litres).

ربع *ribiɛ* /adj */ stocky, stout.

أربع *ʕarbaɛ*[1] /num: in constr w foll n pl; usu *ʕarbaɛt* when followed by n pl ordinarily w initial hamza/ four. *ʕif-faɋɋa ʕarbaɛ maṭaariḥ* it's a four-roomed flat. *ʕarbaɛt alaaf* four thousand. *ʕarbaɛt iɋlima* four pens. ‖*bi-ʕarbaɛ ɛeneen [joc]* (with four eyes) wearing glasses.

أربع، أربعاء *ʕarbaɛ*[2] (also *yoom ʕarbaɛ*) /n/ a Wednesday. *(yoom) il-ʕarbaɛ* (this) Wednesday. ‖*ʕarbaɛ ʕayyuub [Chr]* the Wednesday of Holy Week on which the sufferings of Job are commemorated.

أربعة *ʕarbaɛa* /num: in absol state, in apposition, or w foll n sing in contexts of ordering and itemizing; pl-*aat*/ four. *ʕarbaɛa w-ʕarbiɛiin sana* forty-four years. *ʕil-maẓaahib il-ʕarbaɛa* the four Islamic schools of law. *ʕil-kutub di ʕarbaɛa* these books are four (in number). *ʕil-ʕiɋlima l-ʕarbaɛa* the four pens. *ʕarbaɛa kiilu* four kilos. ‖*ʕumm*[a] *ʕarbaɛa w-ʕarbiɛiin* (1) centipede. (2) a witch of a woman.

¶ *ʕarbaɛaat* /adv/ in fours.

رباعى *rubaaɛi* /adj/ **1** fourfold, quadripartite. **2** for four people. *ɋawaarib rubaɛiyya* four-man boats. — /n pl *rubaɛiyyaat/* **3** *[mus]* quartet. **4** quatrain.

ربيع *rabiiɛ* /n/ **1** spring, springtime. ‖*rabiiɛ (il-)ʕawwal* the third month of the Muslim year. *rabiiɛ (it-)taani* the fourth month of the Muslim year. **2** *[rur]* clover grown as a main crop.

ربيعى *rabiiɛi* /adj/ spring-like (of weather). ‖*ramad rabiiɛi* inflammation of the eyes caused by an allergy to pollen etc., and occurring in the spring.

ربّاع *rabbaaɛ* /n */ weight-lifter.

مربع *marbaɛ* /n pl *maraabiɛ/* pasture, meadow.

أربعتاشر، أربعة عشر *ʕarbaɛtaaʃar* **1** /num pl *-aat/* fourteen. ‖*ɋamar ʕarbaɛtaaʃar* (1) a full moon (being the state of the moon on the fourteenth night of a lunar month). (2) a dazzling beauty. **2** *ʕil-ʕarbaɛtaaʃar* /adj invar/ the fourteenth.

أربعين *ʕarbiɛiin* **1** /num pl *-aat/* forty. — *ʕil-ʕarbiɛiin* **2** /adj invar/ the fortieth. **3** /n/ the fortieth day (1) after a death, when certain traditional ceremonies are performed in commemoration of the deceased. (2) after childbirth, when the mother ceases to be ritually impure. see further under ر ب ع ن

ربعمية، أربعمائة *rubɛumiyya* **1** /num pl *-aat/* four hundred. **2** *ʕir-rubɛumiyya* /adj invar/ the four-hundredth.

رابع *raabiɛ*[1] /adj */ fourth. ‖*min raabiɛ il-mustaḥiil* (or *il-mustaḥilaat*) absolutely impossible.

مربوع *marbuuɛ* /adj */ **1** stocky, stout. **2** folded in four.

ربّع *rabbaɛ* /vt/ **1** to form (s.th.) into a square, give (s.th.) the shape of a square. **2a** to quadruple. *salaam mirabbaɛ* (1) a fourfold flourish (e.g., from a band at a wedding after each toast). (2) a pompous and effusive greeting. **2b** *[math]* to square (a numeral). *ʕitneen tarbiiɛ* two squared. *mitr*[i] *mrabbaɛ* a square metre. **3** to cross (the arms or legs). ‖*ɋaaɛid wi-mrabbaɛ riglee* he's sitting comfortably. — /vi/ **4** to eat clover. **5** to practise weight-lifting. -vn *tarbiiɛ*; ava/pva *mirabbaɛ*.

تربيع *tarbiiɛ* /n pl *tarabiiɛ/* square.

تربيعة *tarbiiɛa* /n pl *tarabiiɛ/* **1** square piece, e.g., in tent appliqué work (see Pl.H, 4). **2** triangular headkerchief (see Pl.F, 9).

التربيعة *ʕit-tarbiiɛa* /prop n/ market in Cairo, in the Ghouriyya district.

تربيعى *tarbiiɛi* /adj/ *[math]* pertaining to squaring. *gizr tarbiiɛi* square root.

مربّع *mirabbaɛ, murabbaɛ*[1] /n pl *-aat/* square. ‖*mirabbaɛ il-ɋiff [naut]* cross-jack. *-ɋumaaʃ mirabbaɛaat* (1) checkered cloth. (2) needle-point cloth.

مربّع *murabbaɛ*[2] /n/ **1** *[mus]* 4/4 time. **2** dance performed by horses.

اتربّع *ʕitrabbaɛ* /vi/ **1** to be formed into a square. **2a** to be quadrupled. **2b** *[math]* to be squared. **3** to sit cross-legged. -ava/iva *mitrabbaɛ*.

رابع *raabiɛ*[2] **1** /vt/ to undertake a quarter share with (s.o., in business etc.). *ḫ-arabiɛ-kum fil-beeɛa di* I'll be your fourth partner in the deal. **2** /vi/ *[rur]* to work as a farm labourer (because labourers formerly shared a quarter of the crop). -vn *mirabɛa*; ava *miraabiɛ*.

مرابعة *mirabɛa* /adv/ by four people. *yitʃaal mirabɛa* it is carried by four people. *bi-yilɛabu koomi mrabɛa* they play four-hand *koomi*.

مرابع *miraabiɛ* /n */ *[rur]* farm labourer.

استربع *ʕistirabbaɛ* /vi/ to sit cross-legged. -ava *mistirabbaɛ*.

ر ب ع ن see also ر ب ع

ربعن *rabɛan* /vi/ to reach the fortieth day (1) after childbirth (of a mother or child). *lamma rabɛant*[i] *sxint*[i] *ɋawi* forty days after giving birth, my temperature went up very high. (2) after death (of the deceased). -vn *rabɛana*; ava *mirabɛan*.

ر ب ك

ربك *rabak (i, u)* /vt/ **1** to entangle, muddle, compli-

cate. *marbuuk fiʃ-ʃuɣl* up to one's neck in work. **2** to confuse, bewilder, embarrass. - vn *rabka*; ava *raabik*; pva *marbuuk*.

ربكة *rabka* /n pl *-aat*/ confusion, muddle:

مربك *murbikˀ* /adj */ confusing, complicated. *ʃil-mawqif murbik wi-raɣmⁱ kida ḫ-alaaqi ḫall* it's a complicated situation, but even so I'll find a solution.

اتربك *ʃitrabak* /vi/ **1** to be or become muddled. *ʃiʃ-ʃuɣlⁱ ḫa-yitribik* the work will get messed up. **2** to become confused and embarrassed. *ʃawwil ma ʃaf-ha trabak* as soon as he saw her he became flustered. - ava/iva *mitribik*.

ارتبك *ʃirtabak* = *ʃitrabak*. - vn *ʃirtibaak*; ava *mirtibik*.

ر ب ن

ربّان *rubbaan* /n pl *rababna*/ captain, skipper.

ر ب و ¹

ربوة *rabwa* /n pl *ruba*/ hill, slight incline.

ربا *riba* /n/ usury.

رباية *ribaaya* /n/ **1** upbringing, education. *ʃana sittⁱ rbaayit madaaris* I'm a woman with schooling. **2** good breeding, good manners. *ʃin-naas dool ɛanduhum ribaaya* those are well-bred people.

ربّى *rabba²* /vt/ **1a** to make or let grow, rear. *bi-nrabbi t-taqaawi f-qaṣaari* we grow the seeds in pots. *bi-yrabbu g-gimaal ɛaʃaan iʃ-ʃeel* they raise camels for carrying work. *rabba ʃaɛr-u* he let his hair grow. *huwwa mrabbi daqn-u* he has a beard. ‖*ɛuguul tarbiyya* calves kept for meat. - *rabbit il-xamiira* she prepared the leaven so that it started to work. - *rabbit-li ɛilla* she made me sick and tired, she made me fed-up. **1b** to keep (an animal, as a pet). *ʃil-ɛeela mrabbiyya kalb* the family keeps a dog. **2** to put on (extra weight or the like). *rabbeet kirʃ* you've grown a paunch. *ʃin-naas bi-tzaɣɣaṭ-hum ɛaʃaan yirabbu laḫmⁱ ktiir* people force-feed them to make them put on a lot of meat. **3a** to bring up, raise (children). *da ɛamm-i lli rabbaa-ni* this is my uncle who brought me up. *rabbaa-hum tarbiyya masiḥiyya* he gave them a Christian upbringing. **3b** to educate in moral and social conduct, bring up to be well-mannered. *ʃilli ma-trabbii ʃil-ʃahaali trabbii ʃil-ʃayyaam [prov]* he who is not disciplined by his parents will be disciplined by life. - vn *tarbiyya, tarbiyaˀ*; ava/pva *mirabbi*.

تربية *tarbiyya, tarbiya* /n/ **1** education, upbringing. *wizaarit it-tarbiya wit-taɛliim* the Ministry of Education. *tarbiya badaniyya* physical education. *ɛadiim it-tarbiyya* ill-bred. **2** *[cook]* thickening of flour and butter or yoghurt added to soups and stews.

مربّى *murabbi* /n */ mentor, spiritual tutor.

مربّية *murabbiyya, murabbiya* /n pl *-aat*/ children's nurse, nanny, nursemaid.

تربوي *tarbawi* /adj/ pedagogical, educational.

اتربّى *ʃitrabba* /vi/ **1** to be raised, be reared. *ʃil-firaax bi-titrabba fil-beet* the chickens are raised in the house. **2** to be well brought-up. *ʃinta ɋaliil il-ʃadab wi-ma-trabbet-ʃ* you are rude and ill-bred. - iva *mitrabbi*.

رابى *raaba* /vi/ to practise usury. - ava *miraabi*.

مرابى *muraabi* /n */ usurer.

ر ب و ²

ربو *rabw* /n/ asthma.

ر ب و ر

ربور *raboor* <Fr *rapport*> /n/ report.

ر ب و ه

ربوه *rabooh* <Fr *rabot*> /n pl *-aat*/ *[carp]* **1** trying plane. **2** planing machine.

ر ب ى ¹ see ر ب و ¹: *ribaaya, rabba, tarbiyya, tarbiya, murabbi, murabbiyya, ʃitrabba, raaba, muraabi*

ر ب ى ² see ر ب ب ²: *marabba*

ر ب ى ر

روبير *rubeer* <Fr *repère*> /n/ *[eng]* bench-mark.

ر ت ب

رتبة *rutba* /n pl *rutab*/ rank. *rutab ɛaskariyya* military ranks.

رتيب *ratiib* /adj */ monotonous.

مرتبة *martaba* /n pl *maraatib*/ **1** mattress. **2** rank, status. ‖ *ʃallaah yiɛalli maratb-ak* God advance you! (expressing gratitude). - *maɛa martabit iʃ-ʃaraf [acad]* with honours, as in *ʃitxarrɑgtⁱ b-taqdiir gayyid giddan maɛa martabit iʃ-ʃaraf* I graduated with the grade 'Very Good with honours'.

راتب *raatib* /n pl *rawaatib*/ **1** regular supply. *raatib il-biqaala* regular grocery order. *laḫmit ir-raatib* the regular meat order. ‖*ḫallaaq ir-raatib* barber who makes regular visits to customers. **2** salary, wage. — /adj/ **3** regular. *ʃil-ʃimaam ir-raatib* the regular imam.

رتّب *rattib* /vt/ to put in order, arrange. *rattib hiduum-ak fid-durg* arrange your clothes in the drawer. *rattibt-i-lak maɛaad* I've arranged an appointment for you. *ʃik-kutub mirattiba tartiib ʃabgadi* the books are arranged alphabetically. ‖*raagil murattab* an orderly man. - vn *tartiib*; ava *mirattib*; pva *mirattib, murattab*.

ترتيب *tartiib* /n pl *-aat*/ **1** organization, order, arrangement. *bit-tartiib* in order, in succession. **2** plan, preparation. *tartibaat il-faraḥ* arrangements for the wedding-party.
مرتّب *murattab* /n pl *-aat*/ salary.
اترتّب *ʔitrattib* /vi/ to be put in order, be arranged. - iva *mitrattib, mutarratib*↑.
¶ *ʔitrattib ɛala*↑ to follow upon, be consequential upon.

ر ت ت ى ف
روتاتيف *rutatiif* <Fr *rotative*> /n/ *[print]* rotary press.

ر ت ر د
ريترِيد *ritrid* <Engl> /n/ *[auto]* retread.

ر ت س
رتسا، ريتسا *ritsa* <It *rizzo*> /coll n/ sea-urchin(s).

ر ت ش [1]
رتش *ratf* /n/ **1** soil, earth. **2** rubble, broken stone. - also *radf*.
رتشة *ratfa* /unit n, pl *-aat*/ piece of stone or broken brick.

ر ت ش [2] see ر ت و ش : *rutuuf*

ر ت ع
رتع *rataɛ (a)* /vi/ **1**↑ to revel, indulge oneself. **2** to let up, calm down. *ṭuul in-nahaar titxaaniq ma-tirtaɛ-ʃ laḥẓa* she is quarrelling all day long and never shuts up for a moment. - vn *rataɛaan*; ava *raatiɛ*.

ر ت ل [1]
رتّل *rattil* /vt/ **1** *[Isl]* to chant (e.g., the Koran, according to prescribed rules). **2** *[Chr]* to sing, chant (hymns, responses etc.). - vn *tartiil*; ava *mirattil*; pva *murattal*.
ترتيلة *tartiila* /n pl *taratiil*/ *[Chr]* hymn.
مرتّل *murattil* /n */ *[Chr]* cantor.
اترتّل *ʔitrattil* /vi/ passive of *rattil*. - iva *mitrattil*.

ر ت ل [2] see ل ت ر : *ritl*

ر ت و ش
رتوش *rutuuf* <Fr *retouche*> /n/ *[phot]* retouching (of a negative).

ر ت ى ن [1]
روتين *rutiin* <Engl> /n/ **1** routine, humdrum round. *rutiin il-ḥayaah il-ɛadiyya* the routine of ordinary life. **2** bureaucratic routine, sanctified practice. *ʔir-rutiin ma-yismaḥ-lii-ʃ ʔaruuḥ maaʃi* it would be contrary to regulations for me to go on foot.
روتيني *rutiini* /adj */ **1** routine, normal. *ʔigraʔaat rutiniyya* routine procedures. **2** attached to routine. *ḥa-yifham ʔinnak rutiini zayyu* he'll think that you're as much a stickler for routine as he is.

ر ت ى ن [2]
رتينة *ritiina, ratiina* <It *retina*> /n pl *rataayin*/ mantle (of a Tilley lamp).

ر ت ى ن ج
رتينج، راتينج *ratiinag* /n pl *-aat*/ resin.
رتينجي، راتينجي *ratingi* /adj/ resinous.

ر ث ى see ر س ى [2]

ر ج ء see ر ج و : *ragaaʔ*

ر ج ب
رجب *ragab* /n/ Ragab, the seventh month of the Muslim year. ‖*la yiɛgib-u l-ɛagab wala ʂ-ʂiyaam fi-ragab [prov]* (he is pleased neither by wonders nor even by fasting in Ragab) ≈ he is the sort who will always find something to disapprove of, even in the most remarkable things.
الرجبيّة *ʔir-ragabiyya* /n/ *[Isl]* **1** the 27th of Ragab. **2** visit to Mecca made on that day.

ر ج ج
رجّ *ragg (u)* /vt/ to shake, cause to tremble, cause to quake. - vn *ragg, ragagaan*; ava *raagig*; pva *marguug*.
رجّة *ragga* /inst n, pl *-aat*/ a shaking, a trembling, a quake.
اترجّ *ʔitragg* /vi/ to shake or be shaken, tremble or be made to tremble, quake or be made to quake. - ava/iva *mitragg*.
ارتجاج *ʔirtigaag* /n/ *[path]* concussion.

ر ج ح
راجح *raagiḥ*↑ /adj/ preponderant. *ʔil-kaffa r-raghḥa* the upper hand. ‖*ɛaql raagiḥ* a sensible mind, a prudent mind. see further under م ر ج ح

ر ج ر ج
رجرج *ragrag* /vt/ to cause to quiver, tremble or vibrate. - vn *ragraga*; ava/pva *miragrag*.
اترجرج *ʔitragrag* /vi/ to quiver, tremble, vibrate. - ava *mitragrag*.

ر ج ع

رجع *rigiʕ (a)* /vi/ **1** to come or go back, return. *ma-b-yirgaʕ-f*^{i} *ʔilla baʕd il-ʕaṣa* he doesn't come back till after supper. *rigiʕna taani lil-ʔamsaal* we've got back to saying proverbs again. *ʔil-ḥasana ḥa-tirgaʕ-lak bil-xeer* the good you do will bring you good. ‖*rigiʕ fi-kalaam-u* (1) he went back on his word. (2) he changed his mind. **2** to refer. *ma-fii-ʃ kutub yirgaʕ laha ṭ-ṭalaba* there are no books for the students to consult. *ʔir-ruguuʕ liʃ-ʃaʕb* consulting the people. **3** to go back, be attributable (to an origin). *fii yimkin sittiin ṿaṭṣa laakin kull-a-ha b-tirgaʕ li-talat ʔawḍaaʕ lig-ġism* there are maybe sixty ways of diving but they all go back to three physical positions. *di ragʕa l-ʒuruuf il-ʔiṣaaba* this is attributable to the circumstances surrounding the injury. **4** /preverb/ to return (to doing s.th.). *rigiʕ yiqul-li* he started telling me again. *dimaaɣ-i rigʕit tiwgaʕ-ni* my head started hurting again. - vn *ruguuʕ*; ava *raagiʕ*.

¶ *rigiʕ ʕan* to turn from, give up. *ʔirgaʕ ʕan ʕamayl-ak* give up your (evil) ways!

رجوع *ruguuʕ* /n/ return. *bi-ruguuʕ il-bariid* by return of post. ‖*ruguuʕ if-ʃeex (ʔila ṣibaa)* the old man's return to youth (title of a widely-quoted book on sexual techniques).

مرجوع *marguuʕ* /n pl *-aat*/ unsold merchandise, surplus stock. *ʔaxbaar il-yoom taqriiban ma-l-haa-ʃ marguuʕ* there are virtually no surplus copies left of (the weekly) Akhbar el-Yoom. ‖*yirgaʕ marguʕ-na li-...* let our subject revert to.... - *nirgaʕ li-marguʕ-na* let's get back to our (original) subject.

رجعة *ragʕa* /unit n/ a return.

رجعى *ragʕi* /adv */ **1** retroactive. *bi-ʔasar ragʕi* with retroactive force, with retroactive effect. **2** revocable. *ṭalaaq ragʕi [leg]* revocable divorce. **3** reactionary.

رجعيّة *ragʕiyya* /n/ *[pol]* reactionism.

رجيع *ragiiʕ* **1** /adj invar/ second-rate, second-hand. **2** /coll n/ rejects. ‖*ragiiʕ il-koon* rice hulls.

مرجع *margiʕ*$^{\uparrow}$ /n pl *maraagiʕ*/ reference work. *kaʃʃaaf miṭʕaddid il-maraagiʕ* cross index.

رجّع *raggaʕ, raggaʕ* /vt/ **1** to cause to return, move or bring back, give or take back. *raggaʕt*^{i} *ktaab* I returned one book. *raggaʕ dimaaɣ-ak* move your head back! *maddeet ʔiid-i w-raggaʕt-a-ha taani* I stretched out my hand and withdrew it again. *raggaʕ iʃ-ʃiriṭ* he rewound the tape. *ʔil-ḥagaat di tiraggaʕ-na l-maṣr il-firʕoniyya* these things take us back (in time) to pharaonic Egypt. ‖*zuraar it-targiiʕ* back spacer on a typewriter. **2** to bring up, vomit. *raggaʕt*^{i} *kull illi f-baṭn-i* I brought up everything that was in my stomach. **3** to attribute. *ʔana b-araggaʕ ʕaraf-u mid-dinya l-beet-u* I attribute his general discontent to his home-life. - vn *targiiʕ*; ava/pva *miraggaʕ*.

ترجيعة *targiiʕa* /n pl *-aat/ [mus]* refrain.

مرجّع *miraggaʕ* /n pl *-aat/ [mus]* segno of a passage to be repeated.

اترجّع *ʔitraggaʕ* /vi/ passive of *raggaʕ*. - iva *mitraggaʕ*.

راجع *raagiʕ* /vt/ **1** to revise, check, review. *ʔil-muhandis il-ʔinʃaaʔi b-yiigi yraagiʕ il-maʕasaat* the construction engineer comes and checks the measurements. *raagiʕ nafs-u* he reconsidered. - *qism il-muragʕa* comptrolling department. **2** to audit (an account). *miʒaan muragʕa [bank]* trial balance. - vn *muragʕa*; ava *miraagiʕ*; pva *muraagaʕ*$^{\uparrow}$.

مراجعة *muragʕa* /n pl *-aat/* check, revision, audit.

مراجع *muraagiʕ* /n */ **1** checker, reviewer. **2** auditor.

اتراجع *ʔitraagiʕ* /vi/ **1** to be gone over, be checked, be revised. **2** to be audited. **3** to recede, retreat. - ava/iva *mitraagiʕ*.

مرتجع *murtagaʕ* **1** /adj/ unsold (merchandise), surplus (stock). ‖*zeet murtagaʕ* used (car) oil (sold cheap for re-use). **2** /n pl *-aat/* unsold merchandise, surplus stock.

أرجع *ʔargaʕ* /vt/ to attribute. - vn *ʔirgaaʕ*; ava *murgiʕ*.

إسترجع *ʔistargaʕ*$^{\uparrow}$ /vt/ **1** to remind oneself of (s.th.), recall. *ʔil-ʔustaaz bi-yistargiʕ muḥaḍraat-u* the professor goes over his lectures (to refresh his memory). **2** to recall, ask the return of. - vn *ʔistirgaaʕ*; ava *mistargiʕ*.

ر ج ف

رجف *ragaf (i)* /vi/ to tremble, shake, shiver. *ʔalb-i ragaf* my heart trembled. - vn *ragf, ragafaan*; ava *raagif*.

مرجوف *marguuf* /adj */ shaky, trembling (especially from fear). *ʔalb-i marguuf mil-ʕamaliyya* I am very frightened of the operation.

اترجف *ʔitragaf* /vi/ to be shaken, shake. - ava/iva *mitrigif*.

ارتجف *ʔirtagaf*$^{\uparrow}$ = *ragaf*. - vn *ʔirtigaaf*$^{\uparrow}$; ava *mirtigif*.

ر ج ل [1]

راجل *raagil* /n pl *riggaala, rigaal*$^{\uparrow}$/ **1a** man, adult male. *raagil kibiir* an old man. ‖*raagil il-beet* the master of the house. **1b** one distinguished by manly qualities and virtues. *xallii-k raagil* be a man! *ʕamal raagil ʕalayya* he tried to show me what a tough guy he was. - /adjectivally, occasionally fem *ragla/ da waad raagil* he's a manly boy. *di sitt*^{i} *raagil* she's a tough woman. *xallii-ki bitt*^{i} *ragla* be a brave girl! **1c** condescending or familiar form of address or reference to a man. *ʔinta ya raagil* hey, you there! *ʔir-raagil ig-ganayni lli kaan hina* the garden-

er fellow who was here. **2** husband. *ragl-ik feen* where's your husband? *ḍill*^{i} *raagil wala ḍill*^{i} *ḥeeṭ [prov]* (the shadow of a husband rather than that of a wall) ≈ it's better to get married than to stay at home by yourself. **3** underling, employee, follower. *ʕir-raagil bitaaʕ-i* my man, my servant, my agent, etc. *riggaalit il-miʕallim* the boss's men, the boss's gang. **4** king in a pack of playing-cards. — *riggaalit, rigaal* /pl n in const state/ **5** the men of (a particular profession). *rigaal id-diin* the men of religion. ‖*ma-ygib-ha lla rigal-ha* it takes an expert (compliment to one who accomplishes a difficult task).

رجالى *rigaali* /adj invar/ **1** pertaining to men, for men. *banṭalonaat rigaali* men's trousers. **2** consisting of men. *firʕa rigaali* a men's team.

رجولة *ruguulaʔ* /n/ manliness.

رجوليّة *ruguliyya* = *ruguula*.

استرجل *ʕistargil* **1** /vt/ to consider manly. *ʕistargilt-u lamma ʕaam yidaafiʕ ʕankum* I thought it very manly of him when he defended you. **2** /vi/ to become mannish, affect manliness. *sitt*^{i} *mistargila* a mannish woman. -vn *ʕistirgaal*; ava *mistargil*. see further under م ر ج ل.

ر ج ل [2]

رجل *rigl* /fem n, pl *rigleen, ruguul*/ **1** foot, leg (of a person or animal). *raaḥ ʕala riglee* he went on foot. *ḥuuʃi rigleen il-waad* keep the kid's feet away! *simiʕt*^{i} *rigl*^{i} *maʃya ʕas-sillim* I heard a footstep on the stairs. ‖*xiliww*^{i} *rigl* key-money. -*ḥagar rigleen* pumice stone. -*ḥaṭṭ*^{i} *rigl*^{a} *ʕala rigl* he crossed his legs. *sallim ʕalayya w-huwwa ḥaaṭiṭ rigl*^{a} *ʕala rigl* he shook hands with me without even bothering to uncross his legs (a sign of disrespect). -*rigl-u wil-ʠabr* he has one foot in the grave. -*gat rigl-u fiiha* he got mixed up in it (i.e., in the mess, in the disaster etc.). -*wi-rigl-ak fooʠ raʠabt-ak* whether you like it or not! -*ga-k kasr*^{i} *rigl-ak [abus]* ≈ drop dead! -*waaʠif* (or *ʠaayim*) *ʕala rigl* ≈ hopping with excitement, as in *ʃil-balad waʠfa ʕala rigl* the town is hopping with excitement. -*wiʠif ʕala riglee* to stand on one's own two feet, become self-reliant. -*bi-riglee* of one's own volition, as in *giit bi-riglay-ya* I came of my own free will, no one forced me to come, *raaḥ lin-naar bi-riglee* ≈ he walked into it with his eyes wide open, he and no-one else is responsible for the trouble he's in. -*b-agiib rigl-u fik-kalaam* Iam trying to trick him into telling the truth. -*bi-tgurr*^{i} (or *bi-tiʃḥab*) *rigl-u* she leads him on, she tempts him. -*hiyya ʃiid-i w-rigl-i* it is indispensable to me. -*ʃabu rigl*^{i} *masluuxa* ≈ the bogeyman. -*kull*^{a} *ḥaaga taḥt*^{i} *riglee* everything is at his disposal. -*ʃil-kidb*^{i} *ma-luu-ʃ rigleen* a lie will out. -*rigl il-ʁuraab* bird's-foot trefoil. **2** track, footsteps, wake, train. *fi-rigl-* following after, in the train of, as in *gayya f-riglee-hum* she is following them. *rizʠ-u f-riglee* good fortune follows him around, *ḥazẓ-u f-riglee* he always has the same good luck, *ʃil-xeer fi-riglee-k* you bring good luck. ‖*rigl-.. ʕala rigl-..* sticking close to the side of, as in *mineen ma truuḥ rigl-i ʕala rigl-a-ha* where ever she goes I am close behind, *ma-na mittaʕtaʕ min hina ʃilla w-rigl-u ʕala rigl-i* I'm not budging from here unless he comes with me. -*ʃir-rigl*^{i} *fiiha ktiir* it is much frequented. -*ʠaṭaʕ rigl-u min il-beet* he refused to set foot in the house again. **3** foot, leg (of an inanimate object). *rigl*^{i} *kursi* a chair leg. *rigleen babuur gaaz* tripod for a primus stove. **4** leg of a garment. *rigl*^{i} *banṭaloon* a trouser leg. **5** object resembling a foot. *sanda rigl* an L-shaped dolly block.

ر ج ل [3]

ارتجل *ʃirtagalʔ* /vt/ to improvise. *ʃiza l-mumassil naṭṭ*^{i} *saṭr*^{i} *ʃaw saṭreen laazim yirtagil kilmiteen* if the actor skips a couple of lines he has to improvise a few words. -vn *ʃirtigaal*; ava *mirtigil*.

ارتجالى *ʃirtigaaliʔ* /adj/ improvised. *ʠazf irtigaali* extemporized playing. *masʃala rtigaliyya* an improvised affair. ‖*ʃuxl irtigaali* poorly-planned work.

ر ج ل [4]

رجلة *rigla* /n/ purslane.

رجلاج see ر ج ل ش : *riglaaj*

ر ج ل ش

رجلاش *riglaaʃ* (also *riglaaj*) <Fr *réglage*> /n/ *[mech]* regulating, adjusting. *riglaaʃ ʕarabiyya* car-tuning. - also *riklaaʃ, riklaaj*.

رجلش *raglij* /vt/ *[mech]* to regulate, tune, adjust, set. -ava/pva *miraglij*.

اترجلش *ʃitraglij* /vi/ *[mech]* to be regulated, be tuned, be adjusted, be set. -iva *mitraglij*.

ر ج م [1]

رجم *ragam (u)* /vt/ **1** to stone. **2** to revile, curse (particularly by saying *ʃaʕuuzu bi-llaahi min iʃ-ʃiṭaan ir-ragiim*). -vn *ragm*; ava *raagim*; pva *marguum*.

رجيم *ragiim* /adj/ **1** stoned. **2** reviled. ‖*ʃir-ragiim* accursed one (epithet of Satan). *ʃaʕuuzu bi-llaahi min iʃ-ʃiṭaan ir-ragiim* I take refuge in God from the accursed Satan (an invocation of protection).

ارتجم ʃitragam /vi/ **1** to be stoned. **2** to be reviled, be cursed. - iva *mitrigim*.

انرجم ʃinragam = ʃitragam.

رجّم raggim /vt/ **1** to stone, pelt with stones. **2** to hurl abuse at. - vn *targiim, targiim*; ava *miraggim, miraggim*.

رجم [2] see رجمي : *rijiim*

رجن see رجني : *ragiina*

رجو

رجا raga *(u)* /vt/ **1**↑ to hope (for). *nargu ʃinn[i] kalam-na ykuun mafhuum* we hope our words are understood. **2** to beseech, implore. *ʃarguu-k* please! I implore you! *ʃarguu-ki ma-tkallimi-nii-ʃ ʕan ig-gawaaz taani* I beseech you, don't talk to me again about marriage! - vn *raga, ragaaʃ*; ava *raagi*; pva *margu*.

رجاء raga, ragaaʃ↑ /n/ **1** hope. *ragaaʃ-i fiik waḥd-ak ya rabb* my hope lies in you alone, O Lord. *ma-minnuu-ʃ raga* he's hopeless. *xaayib ir-raga* hopeless. *ʃitlamm il-matʕuus ʕala xaayib ir-raga [prov]* (the luckless joined up with the hopeless) ≈ one bad thing on top of another. **2** /pl *ragawaat, ragaʃaat*/ request for a favour. *ʃit-tarqiyya bil-ʕamal miʃ bir-ragawaat* promotion is by work not by favouritism.

ارتجّى ʃitragga /vt/ to entreat, solicit. *ʃatraggaa-k tiʕmil-li xidma* I entreat you to do me a favour. - ava *mitraggi*.

استرجى ʃistarga↓ /vt/ to expect, hope for. *ʃin biṭi mirsaal-ak ʃistargaa [prov]* ≈ no news is good news. - ava *mistirgi*.

استرجّى ʃistaragga↓ /vt/ **1** to hope for. *huwwa lli b-astaraggaa mid-dinya* it is all I desire from this world. **2** to beseech, implore. - ava *mistaraggi*.

رجى see رجو

رجيم

رجيم rijiim <Fr *régime*> /n/ diet. *ʃana ʕamla* (or *maʃya ʕala) rjiim* I'm on a diet.

رجين

رجينة ragiina <perh T *reçina*> /n/ rosin, colophony.

رحب

رحبة raḥaba↑ /n pl *-aat*/ open space, square.

أرحب ʃarḥab↑ /el/ larger/largest, more/most generous (in size).

رحاب *riḥaab: fi-rḥaab illaah* may he be welcomed into God's presence! (in reference to one deceased).

مرحب *marḥab* = *marḥaba*.

مرحبا *marḥaban* /interj/ welcome!

مرحبا *marḥaba* /dual *marḥabteen*, pl *maraaḥib*/ noun equivalent in usage to the English interjection 'welcome!'. *marḥaba* (or less familiarly *marḥabteen* or *maraaḥib*) welcome! greetings! *ya miit* (or *ʃalf* etc.) *marḥaba* a hundred (or a thousand etc.) times welcome! *marḥaba biik* welcome to you!

ترحاب *tarḥaab↑, tirḥaab* /n/ welcome. *ʕabil-ni bit-tarḥaab* he gave me a warm welcome.

رحّب *raḥḥab* /vi/ to give a welcome. *raḥḥabna biihum* we welcomed them. *raḥḥab bil-fikra* he welcomed the idea. - vn *tarḥiib*; ava *miraḥḥab*.

رحّ

رحّ *raḥḥ (i)* /vt/ to toss (bread dough) up and down on a *maṭraḥa* (q.v.) to make it flat and round. - vn *raḥḥ, raḥaḥaan*; ava *raaḥiḥ*; pva *marḥuuḥ*.

اترحّ ʃitraḥḥ /vi/ to be flattened and widened by tossing (of bread dough). - iva *mitraḥḥ*.

رحرح

رحرح *raḥraḥ* /vi/ to sprawl, stretch oneself out. - vn *raḥraḥa*; ava *miraḥraḥ*.

مرحرح *miraḥraḥ* /adj/ full, loose, wide. ‖ *ʕeeʃ miraḥraḥ* flat, crisp, unleavened bread.

رحض

مرحاض *marḥaaḍ↑, mirḥaaḍ↑* (more commonly occurring in the plural form *maraḥiiḍ*) /n/ lavatory.

رحق

رحيق *raḥiiʠ↑* /n/ nectar.

رحل

رحل *raḥal (a)* /vi/ to set out on a journey, depart. ‖ *ʃirḥali ya ʕeen [magic]* away, you evil eye! - vn *raḥiil*; ava *raaḥil*.

راحل *raaḥil* /adj */ deceased, late. *ʃiz-zaʕiim ir-raaḥil* the late leader.

رحلة *riḥla* /n pl *-aat*/ journey, trip. *riḥlit ṣeed* a hunting trip.

رحّالى *raḥḥaali: ʕeeʃ raḥḥaali* type of white bread of wheat or maize flour.

مرحلة *marḥala* /n pl *maraaḥil*/ stage, phase. *ʃil-ʕamaliyya fiiha ʃarbaʕ maraaḥil* the operation has four stages. *ma-fii-ʃ taxaṣṣuṣ ʃilla baʕd[i] marḥalit il-*

lisans there is no specialization until after the B.A. stage. ‖ *ʕaḥsan bi-maraaḥil* far and away better.

مراحيل *maraḥiil: gamal il-maraḥiil* strongest camel in a caravan.

رحّل *raḥḥal* /vt/ **1a** to send off, despatch. *raḥḥalt-u ɛala maṣr* I sent him off to Cairo. *raḥḥalit iṭ-ṭard* she despatched the parcel. **1b** to deport. *raḥḥaluu-ni mil-balad bil-ɋiwwa* they deported me from the country by force. **2a** to move on a stage, transfer. *raḥḥal il-ʕigmaali f-daftar il-ʕustaaz* he transferred the total to the master ledger. *tarḥiil deen* debt conversion. *ḥa-traḥḥal iʃ-fuvl*[a] *ɛalayya w-tuqɛud faaḍi* are you going to fob the work off on me and sit idly? **2b** to finish work on, finish off. **3** to move out of true. *ʕil-ḥadsa raḥḥalit ɋaḍiib il-ɋaṭr* the accident forced the railway line out of true. - vn *tarḥiil, tarḥiil*; ava/pva *miraḥḥal*.

ترحيلة *tarḥiila* or *tarḥiila* /n pl *taraḥiil*/ gang of casual or itinerant labourers.

اترحّل *ʕitraḥḥal* /vi/ passive of *raḥḥal*. - iva *mitraḥḥal*.

ر ح م

رحم *raḥam (a)* **1** /vt/ **1a** to have mercy on. *la tirḥam wala txalli raḥmit rabb-i-na tinzil* you neither help (us) nor allow (us) to find relief elsewhere. ‖ *ʕallaah yirḥam-u* God have mercy on his soul! (of the dead), as in *ʕabuu-ya maat ʕallaah yirḥam-u* my father's dead, God have mercy on his soul! ‖ *law ballaxu l-buliiṣ yibɋa l-ɛayyil ʕallaah yirḥam-u* if they inform the police, God help the (poor) kid! - *ʕallaah yirḥam ʕayyaam zamaan* ≈ O for the good old days! - *yarḥamu-kumu llaah* bless you! (to one who sneezes). **1b** to go easy on, spare. *ʕirḥam nafs-ak* go easy on yourself! *ʕana raḥm-u min iʃ-fuvlaana di* I'm sparing him that task. **2** /vi/ to be merciful, show compassion. *fii naas ma-b-yirḥamuu-ʃ* some people have no compassion. ‖ *buṣṣ*[i] *b-ɛeen-ak wi-rḥam bi-ɋalb-ak* (look with the eye, feel pity in the heart) ≈ don't close your eyes to the sufferings of others. - vn *raḥma*; ava *raaḥim*; pva *marḥuum*.

رحمة *raḥma* /n/ **1** mercy, compassion. *xalli f-ɋalb-ak raḥma* show some compassion! *raagil ir-raḥma manzuuɛa min ɋalb-u* a man with not a trace of compassion in his heart. ‖ *wi-raḥmit* ... strong oath sworn by the dead, as in *wi-raḥmit ʕabuu-ya* by my dead father's soul! *wi-raḥmit il-valya* by the soul of my dead (mother, sister etc.). - *ʕitwaffa l-raḥmit illaah* he died (and went to rest) in God's mercy. - *bisaaṭ ir-raḥma* baldaquin carried at Coptic funerals. - *ɛalee ʕalf*[i] *raḥma* a thousand mercies on his soul. **2** food or money distributed to the poor at cemeteries by relatives visiting tombs of the dead, especially on the traditional mourning Thursdays (viz., *ʕil-xamiis iṣ-ṣuvayyar* and *ʕil-xamiis ik-kibiir*). *ʕaṭlaɛ-lu b-raḥma* I go to visit his grave and distribute alms for his sake. **3** comfort, ease of living, relief from trouble. *hina fii raḥma bin-nisba l-ɛandina* life is easy here compared with where we come from. *ʕiʃ-ʃaay ɛanduku hina raḥma* the tea situation here where you are is easy.

المرحوم *ʕil-marḥuum* /n/ polite form of reference to one dead. *ʕil-marḥuum gooz-ik* your late husband. *ʕil-marḥuuma mraat-ak* your late wife.

رحمن *raḥmaan* /n/ Merciful One (epithet of God). *ya raḥmaan ya raḥiim* what a terrible thing (God save us from such a terrible thing), as in *raagil ya raḥmaan ya raḥiim* what a terrible man! *ʕilli tikrah-u ɋuulu ɛalee ya raḥmaan ya raḥiim* ≈ God help the one she doesn't like!

رحم *raḥim* (also *beet ir-raḥim*) /n/ womb.

أرحم *ʕarḥam* /el/ **1** more/most merciful or compassionate. **2** easier/easiest to bear.

أرحام *ʕarḥaam*↑ /pl n/ kin. *waaḥid min il-ʕarḥaam* a relative.

رحيم *raḥiim* **1** /adj pl *ruḥama*/ compassionate, merciful. **2** /n/ Compassionate One (epithet of God).

رحّم *raḥḥam* /vt/ **1** to distribute alms or pray in order to secure God's mercy on (the dead). **2** to bless (the dead). - vn *tarḥiim*; ava/pva *miraḥḥam*.

ترحيم *tarḥiim* /n pl *taraḥiim*/ *[Chr]* intercessory prayer for the dead (especially during the liturgy).

اترحّم *ʕitraḥḥam* /vi/ to intercede (for the dead). - ava *mitraḥḥam*.

استرحم *ʕistarḥam* /vt/ **1** to ask (s.o.) for mercy. **2** to consider merciful. **3** to select for mercifulness. - vn *ʕistirḥaam*; ava *mistarḥam*.

ر ح ى

رحاية *raḥaaya* /n pl *-aat*/ quern, hand-mill (see Pl.B, 8).

ر خ ت

رخت *raxt* <P *rakht*> /n pl *ruxúta*/ lavishly decorated saddle of the Arab style worked with velvet and silver and hung with tassels etc.

ر خ خ[1]

رخ *raxx (u)* /vi/ to pour down (of rain). *ya naṭara ruxxi ruxxi ɛala ɋarɛit bint uxt-i* (rain, pour down pour down on my sister's daughter's bald pate) a children's chant said when it's raining ≈ it's raining, it's pouring, the old man's snoring. - vn *raxx, raxaxaan, rixxiyya*; ava *raaxix*.

رخّة *raxxa* /inst n, pl *-aat*/ a heavy shower.

رخ خ [2]
رخ *ruxx* <P *rukh*> **1** /n/ *[obsol]* rook (in chess). **2** /coll n/ legendary bird of gigantic size, roc.

رخ ر see ء خ ر: *raaxar, ruxra, ruxriin*

رخ رخ
رخرخ *raxrax* /vt/ **1** to loosen, slacken. **2** to cause to be feeble or flabby. — /vi/ **3** to become loose, become slack. **4** to become feeble, become enervated. - vn *raxraxa*; ava/pva *miraxrax*.
اترخرخ *ʔitraxrax* /vi/ **1** to become loose or flabby. **2** to be made loose or flabby. - ava/iva *mitraxrax*.
استرخرخ *ʔistiraxrax* /vi/ to become loose or flabby. - ava *mistiraxrax*.

رخ ص [1]
رخص *rixiṣ, ruxuṣ (a)* /vi/ to go down in price. *ʔil-ħagaat il-ɣalya rixṣit* the expensive items became cheaper. *ʔil-ɣaali yirxaṣ-lak* ≈ nothing is too good for you. - vn *ruxṣ*.
رخص *ruxṣ* /n/ cheapness. ‖*fir-ruxṣ* when things were cheap. - *bi-ruxṣ it-turaab* dirt cheap.
رخاصة *raxaaṣa* /n/ cheapness.
رخوصيّة *ruxuṣiyya* /n/ cheapness.
رخيص *rixiiṣ* /adj pl *ruxaaṣ*/ **1** cheap, inexpensive. **2** cheap, mean.
رخيّص *rixayyiṣ* /adj */ cheap, inexpensive. *rixayyiṣ wi-kwayyis wi-bn[1] naas* cheap, of good quality and produced by reliable people ≈ ideal.
أرخص *ʔarxaṣ* /el/ **1** cheaper/cheapest. **2** meaner/meanest.
رخص *raxxaṣ[1]* /vt/ **1** to lower in price. *miʃ ħa-traxxaṣ-ha ʕan kida* won't you reduce its price more than that! **2** to degrade, humiliate. *raxxaṣtii-ni ʠawi ya bint ik-kalb* you've made me look very cheap, you bitch! - vn *ṭarxiiṣ*; ava/pva *miraxxaṣ*.
اترخّص *ʔitraxxaṣ[1]* /vt/ to be made cheaper. - iva *mitraxxaṣ*.
استرخص *ʔistarxaṣ* **1** /vt/ **1a** to consider cheap. **1b** to choose for cheapness. **2** /vi/ to look for cheapness, economize. *fii bi-yistarxaṣu w-yiftiru n-nooʕ il-ʔaʠall[1] maʕa ʔinn il-ɣaali taman-u fii* there are those who economize and buy the inferior sort, though it pays to buy the best. ‖*ya mistarxaṣ ya mistaɣli* when you buy cheap goods you end up paying more. - vn *ʔistirxaaṣ*; ava *mistarxaṣ*.

رخ ص [2]
رخصة *ruxṣa* /n pl *ruxaṣ*/ licence, permit. *ruxṣit siwaaʠa* driving licence. *ruxṣit silaaħ* gun licence.
رخّص *raxxaṣ[2]* /vt/ to license, permit, authorize. - vn *tarxiiṣ*; ava/pva *miraxxaṣ*.
ترخيص *tarxiiṣ* /n pl *taraxiiṣ*/ licence, permit.
اترخّص *ʔitraxxaṣ[2]* /vi/ to be licensed. - iva *mitraxxaṣ*.

رخ م
رخم *rixim* /adj */ unattractive, boorish, indolent.
رخام *ruxaam* /n/ marble. *baarid ʒayy ir-ruxaam* as cold (i.e. unfeeling, insensitive) as marble. *naxl[1] ruxaam* marble palms.
رخامة *ruxaama* /unit n, pl *-aat*/ **1** slab of marble, marble table-top, marble counter. **2** a marble palm.
رخّم *raxxam* /vt/ **1** to marble (paper). **2** to cover or decorate with marble. **3** to cause to sag, cause to lie heavy, cause to drag. — /vi/ **4** to sag, drag, lie heavy. **5** to become boorish. - vn *tarxiim*; ava/pva *miraxxam*.
مرخّماتي *miraxxamaati* /n pl *-yya*/ mason who works in marble.
اترخّم *ʔitraxxam* /vi/ **1** to be marbled (of paper). **2** to be covered or decorated with marble. - iva *mitraxxam*.

رخ و see رخ ى: *raxw, raxaawa, rixw*

رخ ى
رخى *raxa (i)* **1** /vt/ to slacken, loosen, relax. *ʔirxi ʃ-ʃabaka ʃwayya* lower the net a little! *ʔirxi l-ħabl* slacken off the rope! ‖*ʔirxi-lhum il-ħabl* give them more rope! be more lenient with them! **2** /vi/ to become slack, become loose. - vn *raxayaan, raxy*; ava *raaxi*; pva *marxi*.
مرخى *marxi* /adj */ near-impotent, sexually feeble (of a man).
رخو *raxw, raxw* **1** /n pl *raxaawi*/ whiplash. **2** /adj invar/ spineless, soft, feeble.
رخو *rixw* /adj/ slack, loose.
رخاء *raxa, raxa, raxaaʔ* /n/ abundance, plenty.
رخاوة *raxaawa, raxaawa* /n/ slackness, looseness. ‖*ʕandu raxaawa* he's effeminate.
تراخي *taraaxiʔ* /n/ slackness, laziness, not pulling one's weight.
اترخى *ʔitraxa* /vi/ to be slackened, be loosened, be relaxed. - ava *mitrixi*.
رخّى *raxxa* /vt/ **1** to slacken. *raxxi ʃ-ʃabaka ʃwayya* slacken the net a little. **2** to weaken, enervate. - vn *tarxiyya*; ava/pva *miraxxi*.
اترخّى *ʔitraxxa* /vi/ **1** to be slackened. **2** to be weakened, be enervated. - iva *mitraxxa*.
أرخى *ʔarxaʔ* = *raxa*.

ارتخى ʔirtaxa /vi/ **1** to become slack, become loose. **2** to lose vigour, become impotent. - vn *ʔirtixa, ʔirtixaaʔˁ*; ava *mirtixi*.

استرخى ʔistarxa /vi/ to be relaxed. *bi-ykuun ir-raas fooq il-mayya wir-rigleen mistarxiyyiin* the head is above the water and the legs relaxed. - vn *ʔistirxa, ʔistirxaaʔˁ*; ava *mistarxi*.

استرخّى ʔistiraxxa /vi/ to become loose, slacken. - ava *mistiraxxi*.

ر د ا

ردا *rida: ţuul ɛumr-ak ya rida wi-nta kida [prov]* (all your life, you garment, you've been the same) ≈ I am the same as I ever have been so the change must be in you.

ر د ا ر

رادار *radaar* <Fr> /n/ radar.

ر د ء see ر د ي

ر د ح

ردح *radaḥ (a)* /vi/ to indulge in a vulgar slanging match (usually of women). - vn *radḥ*; ava *raadiḥ*.

ردّاحة *raddaaḥa* /adj pl *raddaḥiin*/ foul-mouthed, abusive (of women).

ر د خ

ردّاخ *raddaax* /n pl *-aat*/ **1** *[auto]* fuel-pump. **2** valve. *makanit raddaax* lavatory cistern inlet valve. - *kawitʃit raddaax* rubber valve seal.

ر د د

ردّ *radd¹ (u)* /vt/ **1** to give back. *miʃ raddenaa-lu l-ɋalam* didn't we give him back the pen? **2** to put back in position, restore. *rudd il-baab* close the door! *ʔil-migabbaraati radd-i-lu kitf-u* the bone-setter reset his shoulder. *ʔiddaa ɋalam radd-i-lu ɛaɋl-u* he gave him a slap that brought him to his senses. ‖ *radd¹ mraat-u* he remarried his ex-wife. - *ḫaaga trudd¹ r-rooḥ* something that refreshes the spirit, as in *manzar yirudd ir-rooḥ* a sight for sore eyes. **3** to reciprocate. *raddu s-salaam* they returned the greeting. *raddit laha z-ziyaara* she paid a return visit to her. **4** to point out mistakes to, correct. *ʔiza kaan ɣalţaan laazim tirudd-u fil-ɣalaţ* if he's in error you must put him right. ‖ *ɋaalu ya firɛoon ʔeef farɛan-ak.* - *ɋaal ma-lɋit-f¹ ḫadd¹ yrudd-i-ni [prov]* They said, 'Tyrant, what made you tyrannical?' He said, 'No one corrected me'. **5** to remove, rescind, lift. *ʔilaah-i laa ʔasʔal-ak radd il-ɋaḍa bal il-luff¹ fii* O God, I do not ask You to rescind Your providence, rather that You deal kindly with me in it. **6** to reject, ward off, oppose. – /vi/ **7** to reply. *ʔinti ma-bi-truddii-f ɛalayya leeh* why don't you answer me? *ʔin-nimra ma-bi-trudd¹-f* the (telephone) number doesn't answer. **8** /preverb/ to reply (and say). *ʔarudd aɋul-lu ʔeeh* what shall I reply to him? **9** to return. *ʔil-ɛaya kaan bi-yuɋaf wi-yrudd* the sickness used to come and go. ‖ *fikra raddit fi-muxx-i* an idea reoccurred to me. - *raddit il-mayya f-zoor-ak* may the water choke you! **10** to grow healthy. *lamma btada yaakul radd¹ b-surɛa* when he started eating, he quickly got his health back. *wiff-u raadid* his face is glowing with health. - vn *radd, radadaan*; ava *raadid*; pva *marduud*.

¶ *radd² ɛala* to refer to, consult. *kaan yiṣaḥḥ¹ trudd² ɛalayya ɋabl¹ ma tiftiri l-beet da* you should have consulted me before buying this house.

ردّ *radd²* /n pl *ruduud*/ reply. ‖ *radd¹ fiɛl* reaction. - *radd¹ ʃaraf* restitution of honour.

¶ *raddan: raddan ɛalaʔˁ* in reply to.

ردّة *radda¹* /inst n/ one act of returning, answering, etc. ‖ *liɛbit iṣ-ṣadda radda* (1) street ball game. (2) hand-clapping game similar to that played to the rhyme 'Pat-a-cake, pat-a-cake'. - *ʔiid-u fiiha r-radda* he can cure (illnesses) by the touch of the hand.

ردّة *radda²* /n/ bran. ‖ *riḥt-u radda* it smells musty.

مردود *marduud* /adj/ ajar (of a door etc.).

ردّ *ridd* /n/ *[obsol]* ball game resembling a simple form of hockey.

ردّة *ridda* /n/ apostasy.

مردّ *maradd, maradd* /n pl *-aat, -aat*/ **1** trace (by which a farm implement is attached to the draught animal). **2** part of a garment that is turned back on itself, revers. **3a** *[mus]* refrain. **3b** *[Chr]* liturgical response.

اتردّ *ʔitradd* /vi/ **1** to be given back. ‖ *yitradd-i-lak fil-ʔafraaḥ* ≈ may we have the chance to repay your generosity on other happy occasions! (conventional compliment to a host or giver of a gift). **2** to be put back in position. ‖ *ʔitradd iɛtibaar-u* (1) his good standing was restored. (2) *[leg]* the conviction was erased from his record. **3** to be reciprocated. **4** to be corrected in one's mistakes. - iva *mitradd*.

انردّ *ʔinradd* = *ʔitradd*.

ردّد *raddid* /vt/ to give the response (to), echo. *ʔil-muţrib bi-yɋuul il-mazhab wi-baɛdeen il-kooras bi-yraddid-u* the singer sings the refrain and then the chorus repeats it. - vn *tardiid*; ava *muraddid*.

مردّد *muraddid* /n */ *[Chr]* cantor in the Coptic Church.

اتردّد *ʔitraddid, ʔitraddid* /vi/ **1** to go often. *bi-titraddid*

ʕal-baraat she frequents the bars. *bi-yitraddid ʕalee* he often goes to see him. **2** to hesitate. *ʕamiil mitraddid xaayif sahl[i] giddan ʃinn ana ʃaqniʕ-u* given a hesitant timid customer, I can easily convince him. **3**↑ to vibrate. - vn *taraddud*; ava *mitraddid, mutaraddid*↑.

تردّد *taraddud* /n/ **1** hesitancy, irresolution. **2** /n pl *-aat/ [communic]* frequency.

ارتدّ *ʃirtadd* /vi/ **1** to return, revert. *yirtadd[i] lu baṣar-u* his sight will return. **2** to apostatize. **3** to be returned. - vn *ʃirtidaad*; ava *mirtadd, murtadd*.

¶ *ʃirtadd[a] ʕala* (impersonal) passive of *radd[a] ʕala*. *ʃilli zayyak ma-yirtadd[i]-ʃ ʕalee* someone like you is not worth consulting with.

ارتداد *ʃirtidaad* /n/ apostasy.

مرتدّ *murtadd* /n */ apostate.

استردّ *ʃistaradd* /vt/ to recall, ask for the return of, take back. - vn *ʃistirdaad*; ava *mistiridd*.

ر د ر see ر د ا ر: *radaar*

ر د ش

ردش *radʃ* /n/ **1** soil, earth. **2** rubble, broken stone. - also *ratf*.

ردشة *radʃa* /unit n, pl *-aat/* piece of rubble.

ر د ع

ردع *radaʕ*↑ *(a)* /vt/ to deter. *ṭaalib bi-ʃafadd[i] ʕuquuba tirdaʕ il-mugrim* he demanded the severest punishment to deter the criminal. - vn *radʕ*; ava *raadiʕ*.

ر د ف

ردف *ridf* /n pl *ʃardaaf/* **1** *[naut]* middle section (curved portion) of the rib of a boat. **2** hip.

رديف *ridiif* /n/ *[mil]* army reserve.

ردّف *raddif* /vt/ *[agric]* to bank up (certain types of crop planted on one side only of a ridge) with earth from the unused side of an adjacent ridge. - vn *tardiif*; ava/pva *miraddif*.

رادف *raadif*↑ /vt/ to be synonymous with. - ava *miraadif*.

مرادف *muraadif* /n pl *-aat/* synonym.

ر د م

ردم *radam (i)* /vt and vi/ to fill in, or cover, with a layer of earth. *yḥuṭṭ[i] ʃwayyit bizra w-yirdim ʕaleehum* he puts in some seeds and covers them over. *radam iz-ziriiba* he put down a fresh layer of earth in the byre. *radamu l-birak* they filled in the ponds. - vn *radm*; ava *raadim*; pva *marduum*.

¶ *ʃirdim* /fem *ʃirdimi*, pl *ʃirdimu/* to hell with it! forget it!

ردم *radm* /n/ filling of earth, rubble or the like.

اتردم *ʃitradam* /vi/ to be filled in, or covered, with a layer of earth. - iva *mitridim*.

انردم *ʃinradam* = *ʃitradam*.

ر د ن

مردن *mardin, mardan* /n pl *maraadin/* **1** *[text]* spindle. **2** long poker used to arrange pieces in a furnace.

ر د ن ج –

ريدنجوت *ridingoot* <Fr *redingote*> /n/ tail-coat.

ر د و see ر د ى: *radaawa*

ر د ى

ردى *rada (i)* /vi/ **1** to run and leave a stain. *ʃil-ʃalwaan ma-titvisil-ʃ[i] sawa laḥsan tirdi ʕala baʕḍ* (different) colours should not be washed together lest they run and stain one another. **2** to leave an undesirable mark or taint. *ʃaxlaaq-u radit ʕala ʃaṣḥaab-u* his (evil) morals reflected on his friends. - vn *radayaan*; ava *raadi, raadi*; pva *mardi*.

رديء *radi* /adj pl *rudaay/* vile, base. ‖ *ʃil-ʕeen ir-radiyya* the evil eye. *-zayy il-ʕamal ir-radi* like (the consequences of) an evil deed (of something unwanted but inescapable), as in *ʃir-raagil da zayy il-ʕamal ir-radi* the man's like a leech! - *ʃil-ʃaṣl ir-radi yirdi ʕala ṣaḥb-u [prov]* ≈ bad blood will show, what's in the blood cannot be removed.

رداءة *radaaʃa* /n/ **1** vileness, baseness, meaness. **2** low quality. *radaaʃit iṣ-ṣanf[i] txalli z-zubuun ma-yirgaʕ-ʃ[i] taani* the poor quality of the goods stops the customer from coming back.

رداوة *radaawa*↓ = *radaaʃa*.

رديء *radiiʔ*↑ /adj/ = *radi*.

ر د ى ت –

رديتير *radyateer* <Fr> /n pl *-aat/ [auto]* radiator.

ر د ى ه

روديه *rudeeh* <Fr *roder*> /n/ *[mech]* running-in, grinding-in.

ر د ى و

راديو *radyu, radyu* <Fr> /n pl *radyuhaat, radyuhaat, radaawi*↓/ radio. *simiʕt-u fir-radyu* I heard it on the radio. ‖ *baaliʕ radyu* ≈ very talkative.

ر ذ ذ see ر ز ز[2]

ر ذ ل see ر ز ل

ر ز ا ز
رزاز *razaaz* <Fr *rosace*> /n pl *-aat/ [elec]* ceiling-rose.

ر ز ب
مرزاب *mirzaab* /n pl *maraziib/* gouge.
مرزبّة *mirzabba* /n pl *maraazib/* sledge hammer. ‖*wabuur mirzabba* pile-driver.

ر ز ب ي ت
روزبيت *ruzbeet, ruzbiit* <It *rispetto*> /n/ **1** thing or things held in reserve, resource to fall back on. *xalli l-qirfeen dool ɛandak ruzbeet* keep this money with you in case of need. **2** one who is a permanent fixture in a place. *xallii-k ʃinta ruzbeet fil-maktab* you stay put in the office and hold the fort. - also *rusbeet, rusbiit.*

ر ز ب ي ف
رزبيف *ruzbiif* <Engl> /n/ roast beef.

ر ز ت
روزتّة *ruzitta* <It *morsetto*> /n pl *-aat/ [elec]* terminal box, fuse-box (of an electric motor).

ر ز ر ز
مرزرز *mirazraz* /adj/ large, heavy and cumbersome. *ʧuuba mrazraza* a hulking great stone.

ر ز ز [1]
رزّ *ruzz* /coll n/ rice. *ruzz[a] ʃabyaḍ* (1) hulled rice. (2) plain cooked rice. *waraq ruzz* rice paper. ‖*zayy ir-ruzz* in great quantities, as in *kaan fii ɛasaakir zayy ir-ruzz* there were policemen everywhere. - *bi-yaakul ruzz[i] (b-laban) maɛa l-malayka* (he's eating rice pudding with the angels) ≈ he's sleeping soundly.
رزّة *ruzza[1]* /unit n, pl *-aat/* a grain of rice. ‖*ɣurzit ir-ruzza* moss-stitch (in knitting).
رزّاية *ruzzaaya* /unit n, pl *-aat/* a grain of rice.

ر ز ز [2]
رزّة *razza, ruzza[2]* /n pl *ruzaz/* **1** hasp of a door. **2** *[joc]* resounding slap on the back of the neck.
رذاذ *razaaz*↑ /n/ fine spray. *ʃin-naṭar naazil razaaz* it's raining lightly, it's drizzling.

ر ز ز [3] see ر ز ا ز : *razaaz*

ر ز س ت –
رزستانس *rizistans* <Fr> /n pl *-aat/ [elec]* **1** resistance. **2** resistor.

ر ز ع
رزع *razaɛ (a)* /vt/ **1** to slam, bang. *razaɛit il-baab* she slammed the door. *razaɛt is-sammaaɛa* I slammed down the receiver. **2** to deal (a hard blow or the like) to. *razaɛ-u kaff* he gave him a hard slap. *razaɛt-u ɛalqa* I gave him a hell of a beating. *raaḥ raziɛ-ni sabaɛ taman ʃakaawi* he went and clapped seven or eight complaints on me. ‖*razaɛ mifwaar* to tackle a (tiresome) errand, as in *ḥ-arzaɛ il-mifwaar lil-qalɛa* I'm in for that damned trip to the Citadel! **3** to keep (s.o.) hanging about. *razaɛ-ni ɛal-qahwa saɛteen* he kept me kicking my heels in the café two hours. *ʃana marzuuɛ ɛala l-maḥaṭṭa baqaa-li ʃarbaɛ saɛaat zaman* I've been stuck at the station four whole hours! - vn *razɛ, razaɛaan*; ava *raaziɛ*; pva *marzuuɛ*.
اترزع *ʃitrazaɛ* /vi/ **1** to be slammed, be banged. **2** to be dealt a hard blow. **3** to be kept waiting. - iva *mitriziɛ*.
انرزع *ʃinrazaɛ* = *ʃitrazaɛ*. - iva *minriziɛ*.
رزّع *razzaɛ* /vt/ to slam, bang (a number of things, or one thing a number of times). - vn *tarziiɛ*; ava *mirazzaɛ*.
اترزّع *ʃitrazzaɛ* /vi/ passive of *razzaɛ*. - iva *mitrazzaɛ*.

ر ز ق
رزق *razaq (u)* /vt/ to provide, provide for (of God). *ya rabb[i] ʃurzuq-ni* O Lord, sustain me! *rabb-i-na dayman bi-yurzuq-na bi-lli yɛaṭṭal-na* God always sends something to delay us. *daɛeet allaah yurzuq-hum bi-niila* I prayed God to bring disaster on them. ‖*ʃana mif marzuuq biik* I don't rely for my living on you (but on God), I can survive without you. - *ʃeef yiɛmil il-ḥasuud fil-marzuuq [prov]* what can the envious do against one blessed by God with wealth? - /the literary passive form occurs in unelevated speech/ *turzaq* you will be provided for (by God), something will turn up. *kull-u b-yurzaq* all things are provided for by God. *ruziqat bi-walad* a son was born to her. - ava *raaziq*; pva *marzuuq*.
رازق *raaziq* /n/ Provider (epithet of God).
رزق *rizq* /n pl *ʃarzaaq/* what God provides for man as his sustenance, livelihood, means of support. *ʃana b-aɛtimid ɛala r-rizq* I depend on what God sends. *ʃil-maksab da masʃalit rizq* whether one makes a profit is up to God. *ʃir-rizq[i] ktiir il-yomeen dool* business is booming these days. *ma-maɛii-ʃ rizq[i] ʃaṭɛaʃʃa bii* I've nothing to eat for supper. *rizq-u waasiɛ* he is prosperous. *ʃil-baḥr[i] rizq-u ktiir* the fruits of the sea are many. ‖*maɛaak rizq* did you make a catch? (from one fisherman to another). - *ʃahu rizq* it's a way of earning a living, it's something to keep body and soul together, as in *b-alimm[i] sabaaris wi-ʃahu rizq* I pick up cigarette

ends - it's a living. - *ʃinta w-rizq-ak* it's all up to your luck. - *kull' waaḥid wi-luu rizq* or *ʃir-rizq'* (or *ʃil-ʃarzaaq) ɛal-alla* God provides for all. - *ʃir-rizq' yḥibb il-laḥlaḥa* (or *il-xiffiya*) *[prov]* God helps those who help themselves.

أرزقى *ʃarzuqi, ʃarzaqi* /n pl *-yya*/ **1** one who lives from hand to mouth, one who does not know what his next day's job will be. **2** one always on the look-out for money, one who will do anything for a quick buck. *fannaniin ʃarzuqiyya* artists who prostitute their art.

رزّاق *razzaaq* /n/ Provider (epithet of God). *ya fattaaḥ ya ɛaliim ya razzaaq ya kariim* expression used upon beginning work in the morning.

مرتزق *murtazaq*↑ /n pl *murtazaqa*/ mercenary.

استرزق *ʃistarzaq* /vi/ to scrape together a precarious living. *bi-tistarzaq min ʃeeh il-yomeen dool* how are you keeping body and soul together these days? - vn *ʃistirzaaq*; ava *mistarzaq*.

ر ز ل

ارزل، ارذل *ʃirzal* /imper: fem *ʃirzali*, pl *ʃirzalu*/ behave yourself! stop this impertinence!

رزل، رذل *rizil* /adj */ impertinent, insolent.

أرزل، أرذل *ʃarzal* /el/ more/most impertinent.

رزالة، رذالة *razaala* /n/ impertinence, insolence. ‖ *wa-law fiiha razaala* excuse my rudeness, but ..., as in *mumkin tinawil-ni f-fanṭa di wa-law fiiha razaala* excuse my rudeness, but could you hand me that suitcase, *qul-li baqa yaɛni wa-law fiiha razaala ʃaɛmil-bu ʃeeh* so tell me, if you excuse my asking, just what am I supposed to do with it?

رزيل، رذيل *raziil* /adj pl *ruzalâ*/ = *rizil*.

رزيلة، رذيلة *raziila* /n pl *razaayil, razaaʃil*↑/ vice.

رزّل *razzil* **1** /vt/ to reprimand. **2** /vi/ to behave impertinently. - vn *tarziil*; ava/pva *mirazzil*.

اترزّل *ʃitrazzil* /vi/ to be reprimanded. - iva *mitrazzil*.

اترازل *ʃitraazil* /vi/ to behave offensively or insolently. *bi-yitxaaniq maɛa z-zabaayin wi-yitraazil maɛa da w-maɛa da* he gets into quarrels with customers and is offensive to everyone. - ava *mitraazil*.

ارزلّ *ʃirzall* /vi/ to become impertiment or insolent. - ava *mirzill*.

استرزل، استرذل *ʃistarzil* **1** /vt/ to consider cheeky or impertinent. **2** /vi/ to behave in an impertinent manner. - vn *ʃistirzaal*; ava/pva *mistarzil*.

ر ز م

رزمة *ruzma* /n pl *-aat, ruzam*/ **1** ream (of paper). **2** skein.

ر ز ن

رزانة *razaana* /n/ self-composure, steadiness, gravity of demeanour.

رزين *raziin* /adj * and pl *ruzana*/ self-composed, steady, grave.

ر ز ن ا م

رزنامه *ruznaama* <P *roz-nâma*> /n/ *[obsol]* pensions department.

ر ز ى

رزى *raza (i)* /vt/ **1** to afflict. *rabb-i-na razaa-na bi-graan wiḥʃiin* God has afflicted us with bad neighbours. **2** to dump. *ʃirzi l-walad ɛak-kursi* dump the boy on the chair. - vn *razayaan*; ava *raazi*; ava *marzi*.

رزيّة *raziyya* /n pl *razaaya*/ calamity, disaster. ‖ *ya raziyya* ≈ you devil!

ارزى *ʃitraza* /vi/ **1** to be afflicted. **2** *[deris]* to stay put. - ava/iva *mitrizi*.

رازى *raaza* /vt/ to nag, pester. *xallii-k kuwayyis wi-balaaʃ tiraazi ʃumm-ak* be good and don't pester your mother. - vn *miraziyya*; ava *miraazi*.

اترازى *ʃitraaza* /vi/ to be pestered, be nagged. - iva *mitraazi*.

ارتزى *ʃirtaza* /vi/ *[deris]* to stay put. *ʃirtizi ʃuqɛud* why on earth don't you sit down! - iva *mirtizi*.

ر س ب

رسب *rasab (i, u)* /vi/ **1** to fail (in an examination). *xad l-imtiḥaan wi-rasab* he took the exam and failed. ‖ *ṭaalib raasib [acad]* university student who has failed in more than two of a year's subjects and must therefore repeat a year. - *ʃir-rusuub il-waẓiifi* the overlooking of a group of civil servants in respect of salary increases. **2**↑ to settle as a deposit, sink to the bottom. - vn *rusuub*; ava *raasib*.

رسوبى *rusuubi* /adj/ sedimentary.

راسب *raasib* /n pl *rawaasib*/ residue, precipitate, sediment, deposit.

رسّب *rassib* /vt/ **1** to cause to settle as sediment, precipitate. *ʃil-kubbaaya bi-trassib il-wasaaxa lli fil-mayya* the anti-syphon trap allows the dirt in the water to settle. **2** to plate (metal). — /vi/ **3** to settle as sediment, form deposits. - vn *tarsiib*; ava/pva *mirassib*.

ترسيب *tarsiib* /n pl *-aat*/ sediment, deposit.

اترسّب *ʃitrassib* /vi/ to be deposited as sediment. - ava/iva *mitrassib*.

ر س ب س –

رسيسيون *risibsiyoon*↑ <Fr> /n pl *-aat*/ **1** reception desk. **2** room for guests, guests' parlour.

ر س ب ی ت
روسبيت *rusbeet, rusbiit* <It *rispetto*> /n/ **1** thing or things held in reserve, resource to fall back on. *xalli l-qirfeen dool ɛandak rusbeet* keep this money with you in case of need. **2** one who is a permanent fixture in a place. *xallii-k ʃinta rusbeet fil-maktab* you stay put in the office and hold the fort. - also *ruzbeet, ruzbiit*.

ر س ت
راست *rast* <P *râst*> /n/ *[mus]* (the note) middle C. **2** mode in Arabic music beginning on middle C (and having E half flat and B half flat).

ر س ت ق
رستق *rastaq* /vt/ to fix up, settle. *rastaqt il-mawḍuuɛ maɛaa* I arranged everything with him, I settled the affair with him. *rastaqt-i-lu waẓiifa* I fixed him up with a job. - vn *rastaqa*; ava/pva *mirastaq*.
اترستق *ʃitrastaq* /vi/ to be or become arranged, fixed up, settled or established. *ɛaawiz ʃaḥawwiʃ-li qirfeen kiwayyisiin ɛaʃaan ʃatrastaq w-akammil nuṣṣ[i] diin-i* I want to save a bit of money so that I can settle down and marry. - ava/iva *mitrastaq*.

ر س ت و
رستو *rustu* <It *arrosto*> /n/ *[cook]* **1** joint of meat for roasting. **2** roast meat. *firaax rustu* roast chicken.

ر س ح see س ر ح : *marsaḥ*

ر س خ
رسخ *rasax (u)* /vi/ to become established, take root, become entrenched. - vn *rasaxaan, rusuux*; ava *raasix*.
رسّخ *rassax* /vt/ to implant, establish, impress deeply. - vn *tarsiix*; ava/pva *mirassax*.

ر س ر ا س
رسراس *rasraas* /n/ adhesive made of a yellow powder and used especially for leather.

ر س غ
رسغ *rusɣ* /n pl *ʃarsaaɣ, ʃarsuɣ*/ wrist.

ر س ل
رسالة *risaala* /n pl *-aat, rasaaʃil, rasaayil*/ **1** consignment of merchandise. **2a** message. *ɛaawiz ʃasib-lu rsaala* I want to leave a message for him. **2b** *[Chr]* epistle. **3** *[acad]* thesis, dissertation. **4** calling, vocation, mission. *ʃil-ʃumuuma rsaala* motherhood is a vocation. *ʃaddeet risalt-ak fil-ḥayaah* you've fulfilled your mission in life.
رسول *rasuul* /n pl *rusul*/ **1** messenger. *ma ɛala r-rasuul ʃilla l-balaaɣ* a messenger's function is only to deliver a message. *ʃir-rasuul [Isl]* the Prophet Muhammad. **2** apostle. *ɛiid ir-rusul [Chr]* Feast of the Apostles, celebrated on 6th of Abib. *ṣoom ir-rusul [Chr]* fast observed from Pentecost till the Feast of the Apostles.
رسولي *rasuuli* /adj */ *[Chr]* apostolic.
مرسال *mirsaal* /n pl *marasiil*/ messenger (deliverer of a personal, rather than official, message). *goz-ha baɛat laha mirsaal tiqabl-u ɛal-maḥaṭṭa* her husband sent someone to tell her to meet him at the station. *ʃil-mirsaal la yitfittim wala yithaan [prov]* a messenger is not to be abused or molested.
راسل *raasil[1]* /n */ *[communic]* sender (i.e. of a letter, telegram etc).
رسّل *rassil↓* /vt/ to send, convey. *rassil ig-gawaab ɛal-beet* send the letter to the house. - vn *tarsiil*; ava/pva *mirassil*.
اترسّل *ʃitrassil↓* /vi/ to be sent. - iva *mitrassil*.
راسل *raasil[2]* /vt/ to exchange correspondence with. - vn *murasla, mirasla*; ava *miraasil*.
مراسلة *murasla* /masc n pl *-aat*/ *[mil]* orderly, batman.
مُراسلة *mirasla* /n pl *-aat*/ **1** correspondence, communication. **2** carrier-pigeon.
مراسل *muraasil* /n */ press correspondent.
اتراسل *ʃitraasil* /vi/ to correspond with one another. - ava *mitraasil*.
أرسل *ʃarsal (i)* /vt/ **1** *[communic]* to send, transmit (a telegram, radio signal etc.). **2**↑ to send. - vn *ʃirsaal*; ava *mursil*; pva *mursal*.
إرساليّة *ʃirsaliyya* /n pl *-aat*/ **1** consignment, shipment. **2** *[communic]* mail item. *ʃirsaliyyaat ḥukumiyya* government mail. **3** *[Chr]* mission.
مرسل *mursal: ʃil-mursal ʃilee [communic]* the addressee.

ر س م
رسم *rasam (i)* /vt/ **1a** to sketch, draw, paint. *rasamt-i-lu ʃiskitʃ* I drew a sketch for him. *faatiḥ kababgi w-raasim ḥamaama bin-niyoon ɛal-maḥall* he sells kebab and has had a picture of a dove done in neon over the shop. **1b** to form, shape. *bi-yḥuṭṭu ḥitat il-ɛagiin fiṣ-ṣaag wi-yirsimuu-ha fureek* they put the pieces of dough on the sheet and shape them like *fureek*. **2** to sketch out, draft out, plan. *rasam iṣ-ṣafḥa* he drew up the page (dummy). *kull[i] huguum kaan marsuum* each attack was carefully planned. **3** to dress up, make up. *tiqɛud tirsim fi-nafs-a-ha saɛteen* she spends ages painting her face.

waad marsuum an over-dressed lad. **4** *[Chr]* to ordain. - vn *rasm*; ava *raasim*; pva *marsuum*.

¶ *rasam ɛala* to have designs on. *ʃaxuu-k b-yirsim ɛala l-bint^{i} di* your brother has designs on that girl. *tilaqii bi-yirsim ɛal-filuus* he's probably trying to think of ways to get the money.

رسم *rasm* /n/ **1** /pl *rusumaat, rusuum*↑/ **1a** picture, sketch, drawing, painting. ‖ *dabbuus rasm* drawing-pin. - *rusuum mutaḥarrika* animated cartoons. - *rasm^{i} ɋalb* cardiograph. - *rasm^{i} bayaani* graph. **1b** pattern, design. *ɋumaa̅ʃ fii rusumaat beeḍa* cloth with white patterns. **1c** design, plan. **2** /pl *rusuum*/ **2a** fee, due, charge. *rasm iftiraak* (or *ɛuḍwiyya*) membership fee. **2b** formality, etiquette.

رسمة *rasma^{1}* /n pl *-aat*/ **1** instance noun of *rasm*. **2** pattern or model to be copied.

رسمي *rasmi* /adj */ official. *siɛr^{i} rasmi* official exchange rate (for currency). *mustaxrag rasmi* official transcript. *ʃigraʃaat rasmiyya* official procedures. *waɋt il-ɛamal ir-rasmi* official working hours.

¶ *rasmiyyan* /adv/ officially.

رسميّات *rasmiyyaat* /pl n/ formalities, etiquette, protocol, ceremonial.

راسمة *rasma^{2}* /n pl *-aat, rawaasim*/ tool-carrier (on a lathe).

مرسوم *marsuum* **1** /n pl *marasiim*/ decree, edict. **2** *marasiim* /pl n/ protocol, prescribed procedure.

رسامة *risaama, rasaama* /n/ *[Chr]* ordination.

رسّام *rassaam* /n */ **1** artist. **2** designer, draftsman.

رسّيم *rassiim* /adj pl *rassiima*/ **1** good at drawing. **2** scheming.

مرسم *marsam*↑ /n pl *maraasim*/ (artist's) studio.

مراسم *maraasim* /pl n/ protocol.

اترسم *ʃitrasam* /vi/ passive of *rasam*. - iva *mitrisim*.

ر س م ل

راسمال، رأسمال *rismaal, rasmaal, raʃsimaal*↑ /n/ **1** capital. **2** *[rur]* pigeon droppings (used as fruit tree manure).

رأسمالي *raʃsimaali*↑ **1** /adj */ capitalist, capitalistic. **2** /n */ a capitalist.

رأسماليّة *raʃsimaliyya*↑ /n/ capitalism.

رسمل *rasmil* /vt/ to finance. - ava/pva *mirasmil*.

اترسمل *ʃitrasmil* /vi/ **1** to be financed, amass capital. **2** to settle down in a job, gain status. - ava/iva *mitrasmil*.

ر س ي ^{1}

رسى *risi (a)* /vi/ **1a** to rest, be settled. *ʃil-ɛarabiyya kull-a-ha b-tirsi ɛala f-faseeh* the whole car rests on the chassis. **1b** to come to rest, settle. *risiina ɛala ḥall* we settled on a solution. *ʃit-taman illi risi ɛalee ʃil-mazaad* the price at which (the article) was knocked down at the auction. *risi ɛalee ʃil-ɋaṭa* the tender fell to him. **2** to dock, come to harbour. ‖ *risi ɛala barr* to come to a firm decision. - vn *rasayaan*; ava *raasi*.

راسي *raasi* /adj */ **1** sensible, steady, reliable. **2** in the know, *au courant*.

مرسى *marsa* /n pl *maraasi*/ anchorage, harbour.

مرساة *mirsa* /n pl *maraasi*/ *[naut]* grapnel.

رسّى *rassa* /vt/ **1** to award (a tender). *rassu ɛalee ʃil-ɋaṭa* they awarded him the tender. **2** to explain to, put in the picture. - vn *tarsiyya*; ava/pva *mirassi*.

اترسّى *ʃitrassa* /vi/ passive of *rassa*. - iva *mitrassi*.

ر س ي ^{2}

رثى *rasa*↑ *(i)* /vt/ to lament, elegize (the dead). - vn *risa*; ava *raasi*; pva *marsi*.

رثاء *risaaʃ* /n/ elegy.

ر س ي ا

روسيا *rusya* /prop n/ Russia. see further under ر و س ^{2}

ر ش ت

رشتة *riʃta* <P *rishta*> /n/ type of pasta.

ر ش ت ت

روشتّة *ruʃitta* <It *ricetta*> /n pl *-aat*/ prescription (for medicine).

ر ش ح

رشح *raʃaḥ (a)* /vi/ to filter, filtrate. *ʃil-mayya raʃaḥit min is-saɋf* the water seeped through the roof. - vn *raʃḥ*; ava *raaʃiḥ*.

رشح *raʃḥ* /n/ runniness of the nose.

مرشحة *marʃaḥa* /n pl *maraaʃiḥ*/ pack-saddle, working-saddle (of donkey).

رشّح *raʃʃaḥ* /vt/ **1** to filter. *waraɋ tarʃiiḥ* filter paper. **2** to nominate, put forward as a candidate. *kull^{i} ḥizb^{i} yraʃʃaḥ nuwwaab* each party nominates deputies. *ʃaɋall^{i} min is-sinn^{i} da ma-yiɋdar-ʃ^{i} yraʃʃaḥ nafs-u* under that age he cannot put himself forward as a candidate. — /vi/ **3** to drain, let out seepage. **4** to run (of the nose). - vn *tarʃiiḥ*; ava/pva *miraʃʃaḥ*.

مرشّح *muraʃʃaḥ* /n */ nominee, candidate.

اترشّح *ʃitraʃʃaḥ* /vi/ **1** to be filtered. **2** to be nominated, be put forward as a candidate. - iva *mitraʃʃaḥ*.

ر ش د ^{1}

رشد *ruʃd* /n/ maturity (of mind). *sinn ir-ruʃd [leg]*

majority, coming of age.
رشيد *rafiid* **1** /n/ Discerner (epithet of God). **2** /prop n/ Rosetta, a town on the western branch of the Nile near the coast. *ḥagar rafiid* the Rosetta Stone.
رشيدى *rafiidi* **1** /adj/ of or pertaining to Rosetta. **2** /n pl *rafayda*/ a Rosettan.
أرشد *ʔarfad*[1] /el/ more/most mature. *ʔarfad ʔixwaat-u* the eldest of his brothers and sisters.
أرشد *ʔarfad*[2] /vt/ **1**↑ to guide. **2** *[naut]* to pilot. -vn *ʔirfaad*; ava *murfid*.
إرشادات *ʔirfadaat* /pl n/ instructions.
إرشادى *ʔirfaadi* /adj/ pertaining to guidance.
مرشد *murfid* /n */ **1** guide. **2** *[naut]* pilot.
مرشدة *murfida* /n pl *-aat*/ Girl Guide.
استرشد *ʔistarfid* /vi/ **1** to ask for guidance. **2** to rely for guidance. *ʔana b-astarfid bi-lli tɛamal ɋabl*[i] *kida* I follow the precedents. -vn *ʔistirfaad*; ava *mistarfid*.

ر ش د [2]
رشاد *rafaad* /n/ garden cress, tongue-grass (Lepidium sativum).

ر ش ر ش
رشرش *rafraf* /vt/ to sprinkle all over or repeatedly. -vn *rafrafa*; ava/pva *mirafraf*.
اترشرش *ʔitrafraf* /vi/ to be sprinkled all over or repeatedly. -iva *mitrafraf*.

ر ش ش
رش *raff*[1] *(u)* /vt/ **1** to sprinkle, strew, spray (s.th., i.e. on another). *raffit ɛala nafs-a-ha kuuz mayya* she sprinkled a mugful of water over herself. *bi-nruff*[a] *ɛala wiff*[i] *kull*[i] *kaḫkaaya sukkar budra* we sprinkle icing sugar over the top of each piece of *kaḫk*. ‖ *tiruff il-malḥ*[i] *ma-yinzil-ʃ* (if you scatter salt it won't fall) ≈ there isn't room to swing a cat. *-looḫ ir-raff [naut]* washboard, splashboard. **2** to sprinkle, strew, spray (s.th., i.e. with another). *ʔil-baladiyya bi-truff if-fawaariɛ* the municipality sprinkles the streets. *ṣawaani marfuufa b-radda* trays sprinkled with bran. ‖ *ʔilli yruff-i-na bil-mayya bi-nruff-u bid-damm* (one who sprinkles us with water we sprinkle with blood) our revenge is terrible. **3** to scatter as largesse, distribute open-handedly. *ʔil-muɛiid bi-yruff*[a] *ɛaṭ-ṭalaba nimar* the instructor showers the students with (good) marks. *raff*[i] *ɋahwa w-ʃaay* he bought a round of coffee and tea (for all). -vn *raff*; ava *raafif*; pva *marfuuf*.
رش *raff*[2] /coll n/ lead shot. *bunduɋiyya raff*[i] shotgun.
رشة *raffa* /n pl *-aat*/ **1** /inst n/ a spray, a sprinkling, a scattering. **2** /unit n/ a piece of lead shot, a pellet.
رشّاية *raffaaya* = *raffa* 2.
رشاش *raffaaf* /n pl *-aat*/ spray nozzle (e.g., for a watering-can). *madfaɛ raffaaf* machine-gun.
رشّاشة *raffaafa* /n pl *-aat*/ **1a** spray, spray-gun, spraying machine. *raffaafit ʔasfalt* asphalt-sprayer. **1b** watering-can. **2** machine-gun. **3** *[naut]* blade of an oar.
اترشّ *ʔitraff* /vi/ to be sprinkled, be strewn, be sprayed (on s.th. or with s.th.). -iva *mitraff*.

ر ش ق [1]
رشق *rafaɋ (a)* /vt/ to insert with force, thrust, ram. *rafaɋ il-maṭwa fif-fagara* he drove the knife into the tree. *rafaɋt*[i] *snaan-i fiiha* I sank my teeth into it. -vn *rafɋ*; ava *raafiɋ*; pva *marfuuɋ*.
اترشق *ʔitrafaɋ* /vi/ to be inserted with force, be thrust, be rammed. -iva *mitrifiɋ*.
انرشق *ʔinrafaɋ* = *ʔitrafaɋ*. -iva *minrifiɋ*.

ر ش ق [2]
رشاقة *rafaaɋa*↑, *rafaaqa*↑ /n/ **1** slimness, slenderness. **2** gracefulness, elegance.
رشيق *rafiiɋ*↑, *rafiiq*↑ /adj/ **1** slim, slender. **2** graceful, elegant.

ر ش ك ت ت
رشكتّة *rafkitta* <It *raschietto*> /n pl *-aat*/ de-burring tool.

ر ش م [1]
رشم *rafam (i)* *[Chr]* **1** /vi/ to make the sign of the cross. **2** /vt/ to mark with the sign of the cross. -vn *rafm*; ava *raafim*; pva *marfuum*.
رشم *rafm* /n pl *rufuum*/ **1** *[Chr]* sign of the cross. **2** (also *rafm il-mayya*) *[naut]* water-line on a boat.
رشمة *rafma* /inst n, pl *-aat*/ a making of the sign of the cross.
اترشم *ʔitrafam*[1] /vi/ *[Chr]* to be marked with the sign of the cross. -iva *mitrifim*.
انرشم *ʔinrafam* = *ʔitrafam*. -iva *minrifim*.

ر ش م [2]
راشمة *rafma* /n pl *-aat*/ rust-scraper.
راشم *raafim* /vt/ to remove (rust), clean (s.th.) of rust. -vn *mirafma*; ava *miraafim*.
اتراشم *ʔitraafim* /vi/ to be cleaned of rust. -iva *mitraafim*.

ر ش م [3]
مرشوم *marfuum* /adj/ laden, full, crowded, packed.
اترشم *ʔitrafam*[2] /vi/ to become laden. -iva *mitrifim*.

رشم *raʃʃim* /vt/ to pack, load, cram. *raʃʃim il-maḥfaẓa fluus* he stuffed the wallet with money. - vn *tarʃiim*; ava/pva *miraʃʃim*.

اترشّم *ʔitraʃʃim* /vi/ to be laden with, be crowded with. *ʔil-ʔutubiis mitraʃʃim naas* the bus is packed with people. - iva *mitraʃʃim*.

ر ش م ⁴

رشمة *raʃma* <T *reşme*> /n pl *-aat, ruʃam, raʃaayim*/ **1** halter. **2** bridle (of a draught animal).

ر ش ن see ر ا ش ن : *raaʃin*

ر ش و see ر ش ى : *raʃwa, raʃwa*

ر ش ى

رشا *raʃa* or *raʃa ʔi* **1** /vt/ to bribe. *fii muwaẓẓaf yiwaqqaf il-waraq ɛaʃaan tirʃii* there are officials who delay the papers so that you will bribe them. **2** /vi/ to promise to make a votive offering. *ʔirʃu tiʃʃu [prov]* (carry out your) promise to make a votive offering (which will be distributed among the needy) and you'll be O.K. - vn *raʃw, raʃw*; ava *raaʃi, raaʃi*; pva *marʃi*.

رشوة *raʃwa* or *raʃwa* /n pl *raʃaawi, raʃaawi*/ **1** bribe. **2** votive offering (to a saint). *ya ḥuseen ʮik ir-raʃwa ʔin nagaḥt* If I pass my exam I'll bring you an offering, Hussein.

اترشى *ʔitraʃa* /vi/ to be bribed. - iva *mitriʃi*.

ارتشى *ʔirtaʃaʔ* /vi/ to take a bribe or bribes. *ʔana ɛaayiz waaḥid murtaʃi yiigi yiqniɛ-ni huwwa b-yirtiʃi leeh* I want a taker of bribes to come and give me a convincing reason why he takes them. - ava *mirtiʃi, murtaʃi*.

مرتشى *murtaʃi* /n */ one who habitually takes bribes.

ر ص د

رصد *raṣad*¹ *(u)* /vt/ **1** to make up (an account), keep account of, take stock of. *lagnit raṣd id-daragaat* committee for the recording of (examination) grades. **2** to chart (on a map). *bi-ngiib il-manasiib wi-b-nurṣud-ha ɛal-xariiṭa* we get the ground-levels and chart them on the map. **3** to watch for, lie in wait for. **4** to observe, keep watch on. - vn *raṣd*; ava *raaṣid*; pva *marṣuud*.

رصد *raṣd* /n pl *ʔarṣaad*/ observation. *ʔarṣaad gawwiyya* meteorological observations.

رصد *raṣad*² /n pl *ʔarṣaad*/ talisman.

رصيد *raṣiid* /n pl *ʔarṣida*/ money or goods in hand, stock, balance. *ʃiik min ɣeer raṣiid* an uncovered cheque.

مرصد *marṣad* /n pl *maraaṣid*/ observatory.

مرصاد *mirṣaad: bil-mirṣaad* on the lookout, as in *kaan ɑaɛid-li bil-mirṣaad* he was lying in wait for me.

اترصد *ʔitraṣad* /vi/ **1** to be charted (on a map). **2** to be put under a spell. - iva *mitriṣid*.

رصّد *raṣṣad* /vt/ to balance (an account). - vn *tarṣiid*; ava/pva *miraṣṣad*.

اترصّد *ʔitraṣṣad* /vi/ **1** to lie in wait. **2** to be balanced (of an account). - ava/iva *mitraṣṣad*.

استرصد *ʔistarṣad* /vt/ to waylay, lie in wait for. - ava *mistarṣad*.

ر ص ر ص ¹

رصرص *raṣraṣ*¹ /vi/ to become extremely cold. - vn *raṣraṣa*; ava *miraṣraṣ*.

رصريص *ruṣreeṣ* /n/ intense cold. -/adjectivally/ *ʔid-dunya ruṣreeṣ* it's freezing cold.

ر ص ر ص ²

رصرص *raṣraṣ*² /vt/ to stack. - vn *raṣraṣa*; ava *miraṣraṣ*.

اترصرص *ʔitraṣraṣ* /vi/ to be stacked. - iva *mitraṣraṣ*.

ر ص ص ¹

رصّ *raṣṣ (u)* /vt/ **1** to place in an orderly arrangement, line up, stack, stow. *raṣṣenaa-hum fi-ṣufuuf* we arranged them in rows. *ruṣṣ ik-kutub ɛal-ʔurfuf* set out the books on the shelves! *niruṣṣ-u raaq laḥma w-raaq ruɑaaq* we stack it with a layer of meat followed by a layer of pastry. *raṣṣeet il-malik wil-waziir wil-fileen* I set out the king, the queen and the two bishops (on the chess board). *raṣṣ il-ḥagar* to stack the tobacco-holder of a water-pipe with a layer of tobacco and one of charcoal. **2** to list, enumerate, repeat. *nizlit raṣṣ*¹ *ʃtiima fii* she set about him with a stream of insults. *ɑaɛad yiruṣṣ*¹ *fil-qawaniin* he went on enumerating the laws. ‖*raṣṣeet ɛaleehum it-tamaasi* I said good evening to each of them in turn. - vn *raṣṣ*; ava *raaṣiṣ*; pva *marṣuuṣ*.

رصّة *raṣṣa* /n pl *-aat*/ **1** stack, pile. **2** layer. **3** lay-out (e.g., of pieces on a games-board).

اترصّ *ʔitraṣṣ* /vi/ to be placed in an orderly arrangement, be lined up, be stacked. - iva *mitraṣṣ*.

رصّص *raṣṣaṣ* /vt/ to place (a number of things) in an orderly arrangement, line up (a number of things, in several rows), stack (a number of things, in several stacks). *raṣṣaṣt il-ɛasaakir* I set out the pawns (on the chess-board). - vn *tarṣiiṣ*; ava/pva *miraṣṣaṣ*.

اترصّص *ʔitraṣṣaṣ* /vi/ to be arranged in several rows, stacks, etc. *fil-ʔisbitalya kunna mitraṣṣaṣiin zayy il-ɣanam il-madbuuḥa* in the hospital we were laid out in rows like slaughtered sheep. *ʔid-daftarxaana di kull-a-ha mitraṣṣaṣa f-nafuux-i* I have the arrangement

of the whole archive in my head. - iva *mitraṣṣaṣ*.
ارتصّ *ʕirtaṣṣ* /vi/ to line up. *ʕirtaṣṣu ʠuddaam il-baab* line up in front of the door! - ava *mirtaṣṣ*.

ر ص ص ²
رصاص *ruṣaaṣ* **1** /n/ lead. *ʠalam ruṣaaṣ* a lead pencil. ‖*bi-yirsim il-ʕiskitf*ⁱ *bir-ruṣaaṣ* he draws the sketch in pencil. **2** /coll n/ bullet(s). *ʕeeh raʃy-ak fi-kalaam zayy ir-ruṣaaṣ - wi-ʕeeh raʃy-ak fi-gitta zayy in-niḥaas* 'What do you think of words as (hard as) bullets?' 'Then what do you think of a body as (hard as) copper?' (of one who is impervious to any rebuke).
رصاصة *ruṣaaṣa* /unit n, pl *-aat*/ **1** a piece of lead. ‖*ruṣaaṣa sanda [naut]* plummet. **2** a bullet. ‖*ʕeen titdabbⁱ fiiha ruṣaaṣa* see *ʕitdabb*. **3** a pencil lead.
رصاصي *ruṣaaṣi* /adj invar/ grey.

ر ص ع
رصّع *raṣṣaʕ* /vt/ to set, stud, inlay. *dahab miraṣṣaʕ bi-mgawharaat* gold set with gems. - vn *tarṣiiʕ*; ava/pva *miraṣṣaʕ*.
مرصّع *miraṣṣaʕ* /adj/ **1** fancy, inlaid, embellished. **2** *[mus]* embellished with accidentals (of a scale) as *ʕagam miraṣṣaʕ* or *siika mraṣṣaʕ*.
اترصّع *ʕitraṣṣaʕ* /vi/ to be set, be studded, be inlaid. - iva *mitraṣṣaʕ*.

ر ص ف
رصف *raṣaf (u)* /vt/ to pave, give a surface of gravel and asphalt to, macadamize. - vn *raṣf*; ava *raaṣif*; pva *marṣuuf*.
رصيف *raṣiif* /n pl *riṣfa, ʕirṣifa, ʕarṣifaʔ*/ **1** pavement, sidewalk. **2** quay, pier. **3** (railway) platform.

ر ض ر ض
رضرض *raḍraḍ* /vt/ to shake, rock, jolt. - vn *raḍraḍa*; ava/pva *miraḍraḍ*.
اترضرض *ʕitraḍraḍ* /vi/ to be shaken, be rocked, be jolted. - iva *mitraḍraḍ*.

ر ض ض
رضّ *raḍḍ (u)* /vt/ to bruise, crush. - vn *raḍaḍaan, raḍḍ*; ava *raaḍiḍ*; pva *marḍuuḍ*.
رضّة *raḍḍaʔ* /n pl *ruḍuuḍ*/ bruise.
انرضّ *ʕitraḍḍ* /vi/ to be bruised, be crushed. - iva *mitraḍḍ*.
انرضّ *ʕinraḍḍ* = *ʕitraḍḍ*. - iva *minraḍḍ*.

ر ض ع
رضع *raḍaʕ, riḍiʕ (a)* /vi/ to suckle, nurse (of a baby). *dool raḍʕiin ʕala baʕḍ* they were suckled at the same breast. ‖*ʕaxⁱ fir-riḍaaʕa* foster brother. - vn *riḍaaʕa, raḍʕ*; ava *raaḍiʕ*.
رضعة *raḍʕa* /inst n, pl *-aat*/ a feed (for a baby).
رضيع *raḍiiʕ* /adj/ suckling, unweaned (of an infant).
مرضعة *murḍiʕa* /n pl *-aat, maraaḍiʕ*/ **1** nursing mother. **2** wet-nurse.
رضّع *raḍḍaʕ* /vt/ **1** to suckle, feed with milk (naturally or artificially). *waddeet-u l-ʕumm-u traḍḍaʕ-u* I gave him to his mother to suckle him. **2** to cause to suckle. *raḍḍaʕit il-ʕigl* she took the calf (to its mother) to feed. - vn *tarḍiiʕ*; ava *miraḍḍaʕ*.
ارتضّع *ʕitraḍḍaʕ* /vi/ to be suckled, be fed with milk. - iva *mitraḍḍaʕ*.

ر ض و see ر ض ى : *raḍwa, raḍwaan*

ر ض ى
رضى *riḍi, riḍa¹ (a)* /vi/ **1** to be satisfied, be content. *raaḍi b-ʠaliil-i* I am content with the little I have, I'm easy to please. *ʕayyuha waḥda tirḍa biyya* any girl at all would be happy to have me. *ʠult aggawwiz-ha laakin ʕumm-i ma-kanit-fⁱ raḍya biiha* I wanted to marry her but my mother didn't approve of her. ‖*ʕilli yirḍa b-ʠismit-u yirtaaḥ [prov]* he who accepts his lot is happy. - *ʕilli ma-yirḍa bil-xoox yirḍa b-ʃaraab-u [prov]* (he who doesn't accept the peach must accept its nectar) if one doesn't accept what one is first offered, one may have to be satisfied with something less later on. - *ʕana raaḍi w-ʕabuu-ha raaḍi w-ʕinta maa lak ya ʠaaḍi [prov]* rejoinder to a third party who interferes in an agreement. **2** /preverb/ to be willing (to do). *ma-rḍit-fⁱ tiggawwiz-u* she would not marry him. *ma-ḥaddⁱ-ʃ raaḍi yimḍii-lu l-waraʠ* no one will sign the papers for him. *sinaan-u miʃ raḍya tuʠaʕ* his teeth just will not fall out. *ʕil-ʠarnabiiṭa miʃ raḍya txuff if-fanṭa* the cauliflower won't go into the bag. - vn *riḍa*; ava *raaḍi*; pva *marḍi*. ¶ *riḍi ʕan* or *ʕala* to forgive, confer blessing. *rabb-i-na yirḍa ʕaleek* God bless you! *goz-ha riḍi ʕanha w-ṣaliḥ-ha* her husband forgave her and made up with her.
رضى *raḍa (i)* /vt/ to satisfy. *ʕiʕmil illi yirḍii-k* do as you see fit. ‖*yihdii-k yirḍii-k* expression inserted parenthetically into a narration to indicate that the speaker by that point regarded himself as having gone to great lengths (using expressions such as *ʕallaah yihdii-k* and *ʕallaah yirḍii-k*) to persuade, accommodate etc. the party with whom the reported interchange took place.
رضى *riḍa²* /n/ **1** contentment. *ḥalt-u riḍa* he lives a comfortable life. *riḍa ʕala kida* one is well enough content with that. *riḍa li-man yarḍa* (satisfaction comes

to the one who is easily satisfied) ≈ things could be worse (in reply to an enquiry after one's well-being). **2** male given name. ‖*ṭuul ɛumr-ak ya riḍa w-ʕinta kida* ≈ you can never change your ways.

رضوى *raḍwa* /n pl *-aat/ [magic]* ceremony performed to mollify the spirits possessing a person.

رضوان *raḍwaan* /prop n/ **1** male given name. **2** *[Isl]* name of the angel who guards the gate to Paradise. *gannit raḍwaan* Paradise itself.

رضّى *raḍḍa* /vt/ to appease, seek to please. -vn *tarḍiyya*; ava/pva *miraḍḍi*.

ترضية *tarḍiya* /n/ *[leg]* settlement.

اترضّى *ʔitraḍḍa* **1** /vt/ to appease, seek to please. **2** /vi/ to be appeased. -ava/iva *mitraḍḍi*.

راضى *raaḍa* /vt/ to mollify, appease, soothe. *raḍii-ha b-kilma* say something to stop her being angry. *raḍeet xaṭir-ha* I squared things with her. -vn *miraḍiyya*; ava *miraaḍi*.

اتراضى *ʔitraaḍa* /vi/ to reach a settlement, consent mutually. *ʔitraadu maɛa baɛḍ* they reached a settlement with one another. *bit-taraaḍi* by mutual consent. -vn *taraaḍi*; ava *mitraaḍi*.

أرضى *ʔarḍa↑* = *raḍa*. - vn *ʔirḍaaʔ*.

ارتضى *ʔirtaḍa* /vi/ to be satisfied, be content. -ava *murtaḍi, mirtiḍi*.

استرضى *ʔistarḍa* /vt/ to seek to appease, mollify. -ava *mistarḍi*.

ر ط ب

رطب *riṭib* /adj/ **1** damp, moist. **2** cool.

رطب *ruṭab* /coll n/ soft black date(s).

رطوبة *ruṭuuba* /n/ **1** dampness, moisture, humidity. **2** chill in the bones, rheumatic pain. *ḥasseet bi-ḥwayyit ruṭuuba . f-gittit-i* I felt somewhat rheumatiky. **3** coolness.

رطّب *raṭṭab* /vt/ **1** to cool. *xud duff[i] w-raṭṭab gism-ak* take a shower and cool off. **2** to refresh, soothe. *kalaam-u l-ḥilw[i] yraṭṭab il-ɋalb* his pleasant conversation soothes one's feelings. — /vi/ **3** to become cool. *ʔig-gaww[i] raṭṭab* the weather turned cool. **4** to turn soft and sticky (of dates). -vn *tarṭiib*; ava *miraṭṭab*.

ترطيب *tarṭiib* /n/ *[text]* moisturizing process to which cotton is subjected before spinning.

ر ط ر ط

رطرط *raṭraṭ* **1** /vi/ to become overabundant, become too plentiful. **2** /vt/ to soil, dirty. -vn *raṭraṭa*; ava/pva *miraṭraṭ*.

رطريط *ruṭreeṭ* /n/ filthy mud, mire. ‖*xallaa ruṭreeṭ* he made a mess of it.

ر ط ل

رطل *raṭl* /n pl *ʕarṭaal/* unit of weight equal to 449.28 grams (0.9905 lb). ‖*zayy ir-raṭl* dim-witted and gullible.

ر ط ن

رطن *raṭan (u)* /vi/ to speak in an incomprehensible language, talk double-Dutch. *bi-yurṭunu bil-ʕafrangi* they're gabbling in some foreign language. -vn *raṭn*; ava *raaṭin*.

رطانة *ruṭaana* /n/ incomprehensible language, double-Dutch (applied especially to Nubian).

ر ع

رع *raɛ* /prop n/ the sun god of the ancient Egyptians.

ر ع ب

رعب *raɛab, raɛab (i)* /vt/ to terrify. -vn *ruɛb*; ava *raaɛib*; pva *marɛuub, marɛuub*.

رعب *ruɛb* /n/ terror, fear.

مرعب *murɛib* /adj */ terrifying.

اترعب *ʔitraɛab* /vi/ to be terrified. -iva *mitriɛib*.

ر ع ب ب

رعبب *raɛbib* /vt/ to frighten, terrify. -ava/pva *miraɛbib*.

ر ع د

رعد *raɛad (i)* /vi/ to thunder. -vn *raɛd*.

رعد *raɛd* /n pl *ruɛuud/* thunder.

رعدى *raɛdi* /adj/ pertaining to thunder. *saḥaab raɛdi* thunder clouds.

رعّاد *raɛɛaad* /coll n/ torpedo-fish, electric eel(s).

ر ع ر ع [1]

رعرع *raɛraɛ*[1] /vi/ to flourish, thrive. *ʔiz-zarɛ[i] raɛraɛ* the crops flourished. *ʔil-ɛiyaal miraɛraɛiin fil-madrasa* the children are thriving at school. -vn *raɛraɛa*; ava *miraɛraɛ*.

اترعرع *ʔitraɛraɛ* = *raɛraɛ*. - ava *mitraɛraɛ*.

ر ع ر ع [2]

رعرع *raɛraɛ*[2]: *raɛraɛ ʕayyuub* /coll n/ variety of fleabane (Pulicaria arabica).

ر ع ش

رعش *raɛaʃ (i)* /vt/ **1** to cause to tremble or shiver. **2** to frighten. -vn *raɛʃ, raɛaʃaan*; ava *raaɛiʃ*; pva *marɛuuʃ*.

رعشة *raɛʃa* /inst n, pl *-aat/* a trembling, a shivering. *raɛʃa fiṣ-ṣoot* a tremor in the voice.

مرعوش *marɛuuʃ* /adj */ timid, weak-kneed.

رعشان *raʕʃaan* /adj */ trembling, shaking.
رعّاش *raʕʕaaʃ* **1** /n/ any of a variety of fish which give electric shocks. **2** /adj/: *ʔif-ʃalal ir-raʕʕaaʃ* Parkinson's disease.
رعّاشة *raʕʕaaʃa* /n/ malaria.
اترعش *ʔitraʕaʃ* /vi/ **1** to shiver, tremble. *yikkalfit bil-ɣaṭa ʕaʃaan gism-u b-yitriʕiʃ* he wraps himself up in the bed-cover because he's shivering. **2** to be frightened. - ava/iva *mitriʕiʃ*.
ارتعش *ʔirtaʕaʃ* = *ʔitraʕaʃ*. - vn *ʔirtiʕaaʃ*↑; ava ***mirtiʕiʃ***.

ر ع ع
رعاع *riʕaaʕ* /coll n/ rabble.

ر ع ن
رعن *raʕan* /n/ rashness.
أرعن *ʔarʕan* /adj, fem *raʕna*, pl *ruʕn*/ hubristic, pushy and headstrong.
رعونة *ruʕuuna* /n/ rashness.

ر ع ى
رعى *raʕa (a)* /vt/ **1** to care for the welfare of, look after, safeguard. *ʔil-waaḥid laazim yirʕa ʔawlaad-u* one has to look after the welfare of one's children. *ʔis-sifaara b-tirʕa maṣaaliḥ il-balad* the embassy looks after the country's interests. *ma-b-yirʕaa-ʃ in-niʕma lli huwwa fiiha* he's careless of his good fortune. **2** to pasture (animals). — /vi/ **3** to graze. - vn *riʕaaya, raʕy, marʕa*; ava *raaʕi*; pva *marʕi*.
رعاية *riʕaaya* /n/ care. *riʕaaya ṭibbiyya* medical care. *markaz riʕaayit iʃ-ʃabaab* youth welfare centre. ‖*fi-rʕaayit illaah* (go) in God's care! (to one setting out on a journey).
راعي *raaʕi*↑ /n pl *ruʕaah*/ **1** shepherd. *ʔir-raaʕi ṣ-ṣaaliḥ [Chr]* the Good Shepherd (epithet of Jesus Christ). - *kiis ir-raaʕi [bot]* shepherd's purse. **2** *[Chr]* pastor.
رعيّة *raʕiyya* /n pl *raʕaaya*/ **1a** flock, herd. **1b** *[Chr]* congregation, parish. **2** subject (of, e.g., a state). – /coll n/ **3** subject(s).
مرعى *marʕa* /n pl *maraaʕi*/ grazing place, pasture.
راعى *raaʕa* /vt/ **1** to care for, look after (usually indirectly or at one remove). *laazim tiraaʕi l-ʕarabiyya ʕaʃaan tiʕammar* you must see that the car is well looked after so that it lasts. *da masʔuul ʔinnu yraaʕi naḍaafit il-maḥaṭṭa* he's responsible for seeing that the station is kept clean. *ma-b-yiʕrafuu-ʃ yiraaʕu maṣaliḥ-hum* they are incapable of ensuring that their interests are safeguarded. ‖*tiraʕii-ni ɣraaṭ ʔaraʕii-k ɣiraṭeen [prov]* any service you do me I will repay twice over. **2** to show consideration towards, take heed of. *ʔil-waaḥid laazim yiraaʕi g-giraan* one has to think of the neighbours. *di kaanit miraʕyaa-ni f-balad-ha ɣawi* she was very considerate to me in her country. *ʔifaraat il-muruur ma-ḥadd*ⁱ*-ʃ miḥtirim-ha wala mraʕii-ha* no one respects or takes any notice of the traffic-lights. *law kunti b-taxdi baal-ik mil-ʔuṣuul kunt*ⁱ *traaʕi ʔinn il-ʕayyil ma-ydayiq-ʃ ir-rukkaab* if you'd any manners, you'd see to it that the kid didn't annoy the passengers! ‖*raaʕa rabb-i-na* to fear God, behave rightly. - vn *muraʕaah*; ava *miraaʕi*.
مراعيّة *miraʕiyya* /n/ mindfulness. *maʕa mraʕiyyit-na lil-muʃkila ḥa-nnaaqiʃ il-marḥala t-tanya* keeping the problem in mind we shall discuss the next stage.

ر غ ب
رغب *raɣab*↑ *(a)* /vt/ to desire. *ʔil-mamnuuʕ marɣuub [prov]* what is forbidden is desired. - vn *raɣba*; ava *raaɣib, raaɣib*; pva *marɣuub*.
رغبة *raɣba*↑ /n pl *raɣabaat*/ wish, desire. *ma-luu-ʃ raɣba f-ḥaaga* he has no desire for anything. *ʔiza kaan lak raɣba* if you wish. *ʔistimaarit raɣabaat [acad]* (college) preference form.

ر غ د
رغد *raɣad* /n/ comfort, ease. *raɣad il-ʕeeʃ* comfort of life.

ر غ ر غ
رغرغ *raɣraɣ* /vi/ to be wet with tears, water (of the eyes). *baṣṣeet laqeet ʕenee miraɣraɣa bid-dumuuʕ* I suddenly realized that his eyes were full of tears. - vn *raɣraɣa*; ava *miraɣraɣ*.

ر غ ف
رغيف *riɣiif* /n pl *ʔarɣifa, riɣfa*/ loaf (of bread). ‖*ʔir-riɣiif il-miqammar liṣ-ṣaaḥib illi ydawwar [prov]* (the hot loaf goes to the one who looks) ≈ if you don't look, you don't find.

ر غ م
رغم *raɣam (i)* /vt/ to force, compel, coerce (s.o. into acceptance of s.th.). *bi-yirɣim-ni ʕas-safar leeh* why does he force me to go away? - vn *raɣm, raɣamaan*; ava *raaɣim*; pva *marɣuum*.
رغم *raɣm* /prep/ in spite of. ‖*raɣm*ⁱ *ʔanf-u* in spite of him, without reference to him, no matter what he thinks. - *ʕala* (or *bi-)r-raɣm*ⁱ *min* despite.
¶ *raɣm*ⁱ *ʔinn* /conj/ although, despite the fact that. *b-aḥibb is-sagaayir raɣm inn*ⁱ *hiyya ʔaɣla min iʃ-ʃiiʃa*

I like cigarettes although they are more expensive than the water-pipe.
أرغم ʔarɣam = *raɣam*.

ر غ و see ر غ ى: *raɣwa, raɣwa, raɣawi*

ر غ ى
رغى *raɣa (i)* /vi/ to chatter, chat. *qaʕad yirɣi maʕaaya l-ɣaayit ma ʕaṭṭal-ni* he sat chatting with me until he made me late. - vn *raɣy, raɣayaan*; ava *raaɣi*.
رغوة *raɣwa, raɣwa* /n pl *raɣaawi, raɣaawi*/ foam, froth, lather.
رغوى *raɣawi*↑ /adj/ lathery, foamy, frothy.
رغّاى، رغّاء *raɣɣaay* /n */ one given to chatter, chatterbox.
رغّى *raɣɣa* **1** /vt/ to lather, make foamy or frothy. *raɣɣi l-liifa* lather the loofah! **2** /vi/ to produce lather, foam or froth. *xalli l-laban yiraɣɣi ʕafaan yiʕmil wiff* let the milk get frothy so that it forms a (creamy) skin. - vn *taɣɣiyya*; ava/pva *miraɣɣi*.
اترغّى *ʔitraɣɣa* /vi/ to be lathered, be made frothy or foamy. - iva *mitraɣɣi*.

ر ف ء see ر ف ى [1]

ر ف ء ى ل
رفائيل *rufaʔiil, rafaʔiil* /prop n/ *[Chr]* the Angel Raphael.

ر ف ت see ر ف د: *rafat, rafta, ʔitrafat*

ر ف ح
ترفيحة *tarfiiḥa* /n pl *tarafiiḥ*/ *[non-Cairene]* **1** narrow woollen scarf worn by men (see Pl.F, 2). **2** square of fine white cloth worn as a scarf by men. - also *talfiiḥa, talfiiʕa*.

ر ف د
رفد *rafad* (also *rafat*) *(i)* to dismiss, sack. *wi-ʕanha w-raaḥ rafid-ni* he fired me on the spot. *law il-ʔustaaz simʕ-ak kaan laazim yirfid-ak min ik-kulliyya* if the professor had heard you, he would certainly have expelled you from the college. ‖*daftar il-ʔamd*[i] *wir-rafd [mil]* register of incoming and departing soldiers. - vn *rafd, raft, rafadaan*; ava *raafid, raafit*; pva *marfuud, marfuut*.
رفدة *rafda* (also *rafta*) /inst n, pl *-aat*/ a dismissal. *rafda nhaʔiyya* final dismissal.
رفديّة *rafdiyya* dismissal.
اترفد *ʔitrafad* (also *ʔitrafat*) /vi/ to be dismissed, be sacked. - iva *mitrifid*.

ر ف ر ف [1]
رفرف *rafraf*[1] /vi/ to make a fluttering or flapping motion. *ʔil-ʕaṣfuura rafrafit bi-ginaḥat-ha* the bird fluttered its wings. *da ʕalb-i bi-yrafraf minni* I can't control the palpitation of my heart. - vn *rafrafa*; ava *mirafraf*.
اترفرف *ʔitrafraf = rafraf*. - ava *mitrafraf*.

ر ف ر ف [2]
رفرف *rafraf*[2] /n pl *rafaarif, rafaarif*/ **1** mudguard, fender. **2** cornice, eaves. **3** running-board.
رفراف *rufraaf* /n pl *rafariif*/ bandage or shield for the eye. ‖*ʕala ʕenee rufraaf* ≈ he is wearing blinkers, he has faulty judgement.
رفروف *rafruuf* /n pl *rafariif*/ bandage or shield for the eye.

ر ف س see ر ف ص

ر ف ص
رفص *rafaṣ (u)* **1** /vt/ to kick, kick out at. ‖*bi-yurfuṣ in-niʕma* ≈ he spurns God's blessings. **2** /vi/ to kick out. - vn *rafṣ, rafaṣaan*; ava *raafiṣ*; pva *marfuuṣ*.
رفّاص *raffaaṣ* /n pl *-aat*/ **1** (ship's) propeller. ‖*gooza b-raffaaṣ* water-pipe of the *gooza* type having a hole covered with a leather flap pierced through the wall of the water chamber above the level of the water to allow the expulsion of stale smoke between the smoking of one portion of tobacco and the next. **2** motor-powered boat. — /adj */ **3** given to kicking.
اترفّص *ʔitrafaṣ* /vi/ to be kicked. - iva *mitrifiṣ*.
رفّص *raffaṣ* /vt/ **1** to propel, drive. **2** to kick repeatedly. — /vi/ **3** to keep kicking out. *ʔil-waad bi-yraffaṣ wi-yʕayyaṭ* the kid is kicking and screaming. - vn *tarfiiṣ*; ava *miraffaṣ*.
اترفّص *ʔitraffaṣ* /vi/ to be kicked repeatedly. - iva *mitraffaṣ*.

ر ف ض
رفض *rafaḍ (u)* /vt/ **1** to refuse, reject, turn down. *ʔil-bank*[i] *rafaḍ if-ʃiik* the bank refused the cheque. *rafaḍu ṭ-ṭalab* they turned down the request. **2** /preverb/ to refuse (to do s.th.). *rafaḍu ygawwizu bint-u-hum li-bn-i* they refused to marry their daughter to my son. - vn *rafḍ*; ava *raafiḍ*; pva *marfuuḍ*.
رفضى *rafaḍi* /n */ renegade, bigot, heretic. ‖*ʔibn*[i] (or *bint*[i]) *rafaḍi [abus]* ≈ dishonest bastard (or bitch).

اترفض ʔitrafaḍ /vi/ to be refused, be rejected, be turned down. -iva *mitrifiḍ*.

ر ف ط ا و

رفطاو *rifṭaaw* <Copt> /n/ measure of grain equal to one quarter of a *keela* (q.v.)

[1] ر ف ع

رفع *rafaʕ (a)* /vt/ **1** to raise, lift up. *ʔirfaʕ raas-ak* raise your head! *raaḥ raafiʕ ʔiid-u b-ʕaẓama* he suddenly raised his hand with a grand gesture. *rafaʕ koora ʕalya* he kicked a high shot. ‖*rafaʕ ʕeen-u fii* he talked back at him, he defied him. -*rafʕ il-ʔasqaal* weight-lifting. -*rafʕ*[i] *buxuur [Chr]* raising of incense. -*ʕiid rafʕ iṣ-ṣaliib [Chr]* the feast of the exaltation of the cross. **2** to increase, raise the level of. *ʕayziin nirfaʕ mustawa l-maʕiiʃa* we want to raise the living standard. **3** to remove, rescind, lift. *ʔil-mudiir bi-ysaddaq ʕala g-giza ʔaw yirfaʕ-u* the director either approves the penalty or lifts it. *ya rabb*[i] *ʔirfaʕ ɣaḍab-ak ʕanna* O Lord, lift Your anger from us! *xadt*[i] *ḥuqan laakin rafaʕit id-damm*[i] *yomeen bass* I had injections but they stopped the bleeding for a couple of days only. ‖*rafaʕ ʔiid-u* he withdrew, he gave up. -*madfaʕ ir-rafʕ* Ramadan cannon fired before first light to warn people that they should finish eating before the fast. **4** to submit (s.th., to a higher authority). *rafaʕt if-fakwa lil-ʔidaara* I turned over the complaint to the administration. ‖*rafaʕ daʕwa* (or *qaḍiyya*) *[leg]* to file a suit, as in *rafaʕt*[a] *ʕalee daʕwit ṭard* I sought an eviction order against him. **5a** to record to scale. *bi-yirfaʕu maʕaalim il-ʔarḍ*[i] *w-yurṣuduu-ha ʕala l-xariiṭa* they record the topographical features and chart them on the map. **5b** to take an impression (of finger-prints etc.). *rafaʕu baṣamaat-u min ʕaṭ-ṭarabeeza* they lifted his finger-prints from the table. — /vi/ **6a** to rise (of bread or dough). **6b** to sprout from the earth (of shoots). -vn *rafʕ, rafaʕaan*; ava *raafiʕ*; pva *marfuuʕ*.

رفعة *rafʕa*[1] /pl -*aat*/ instance noun of *rafʕ*.

رافع *raafiʕ*[1] /n/ Raiser of the fortune of men (epithet of God).

رافعة *rafʕa*[2] /n pl -*aat, rawaafiʕ*/ **1** lever. **2** elevator (of a plane).

رفعة *rifʕa*↑ /n/ **1** high rank, standing. *min ʔagl*[i] *rifʕit il-waṭan* for the sake of the good standing of the country. **2** *[obsol]* title of and form of reference to one holding the Grand Order of Muhammad Ali (formerly the highest award for men).

أرفع *ʔarfaʕ*[1] /el/ higher/highest.

رفاعى *rifaaʕi* **1** /adj */ Rifa'i, of or pertaining to the Sufi order founded by Ahmad Rifa'a el-Kabir (the order was celebrated formerly for the miraculous feats performed by its members, especially the discovering and charming of snakes from houses). **2** /n pl -*yya*/ **2a** member of the Rifa'i order. *ɣayyid ya rfaaʕi* paralyse it, Rifa'i (a formula used on seeing a snake). **2b** snake-charmer.

رفيع *rafiiʕ*[1] /adj/ lofty, elevated, refined. *zooq rafiiʕ* refined taste. ‖*ṣaaḥib il-maqaam ir-rafiiʕ [obsol]* title of one holding the Grand Order of Muhammad Ali (formerly the highest award for men).

رفّيع *raffiiʕ* /n pl *raffiiʕa*/ *[soccer]* one skilled at long high shots, good kicker.

اترفع *ʔitrafaʕ* /vi/ passive of *rafaʕ*. -iva *mitrifiʕ*.

رافع *raafiʕ*[2] /vi/ to plead (on one's own or someone else's behalf). -vn *murafʕa*; ava *miraafiʕ*.

مرافعة *murafʕa* /n/ *[leg]* defence.

اترافع *ʔitraafiʕ* /vi/ *[leg]* to plead, present a case. -ava *mitraafiʕ*.

ارتفع *ʔirtafaʕ* /vi/ **1** to become high, rise. *ʔil-ʔasʕaar irtafaʕit* prices went up. *daragit il-ḥaraara rtafaʕit* the temperature rose. *ʃababiik murtafiʕa* high windows. **2** to cease, let up. *ʔid-damm irtafaʕ ʔimbaariḥ* the bleeding stopped yesterday. -vn *ʔirtifaaʕ*; ava *mirtifiʕ, murtafiʕ*.

ارتفاع *ʔirtifaaʕ* /n pl -*aat*/ height, elevation, altitude.

مرتفع *murtafaʕ* /n pl -*aat*/ high place, height. *murtafaʕaat il-gulaan* the Golan Heights.

[2] ر ف ع

رفع *rifiʕ, rufuʕ (a)* /vi/ to become thin, become slender. -vn *rufʕ, rafaʕaan, rufuʕiyya*; ava *rafʕaan*.

رفع *rufʕ* /n/ thinness. *rufʕ*[i] *waraqit is-sigaara ma-yṣaḥḥ*[i]*-ʃ yiziid ʕan kida* the thinness of cigarette paper should not exceed that (i.e. it should not be thinner than that).

رفيع *rafiiʕ*[2] = *rufayyaʕ*.

رفايع *rafaayiʕ* /pl n/ small objects (e.g., small fitments, small and therefore inferior fruits and vegetables).

رفيّع *rufayyaʕ* /adj */ **1** thin, slim, slight, delicate. *xeeṭ rufayyaʕ* a fine thread. *baṣal rufayyaʕ* small onions, baby onions. *buuṣa rfayyaʕa* a slender reed. **2** fine, not coarse. *mabʃara rufayyaʕa* a fine grater. -also *rufantaʕ, rufannaʕ*.

أرفع *ʔarfaʕ*[2] /el/ thinner/thinnest, slimmer/slimmest, etc.

رفّع *raffaʕ* /vt/ **1** to make thin, make fine. **2** to thin, thin down (a liquid). -vn *tarfiiʕ, tarfiiʕ*; ava/pva *miraffaʕ*.

اترفّع ʔitraffaɛ /vi/ **1** to be made thin, be made fine. **2** to be thinned. - iva *mitraffaɛ*.
ارفّع ʔirfaɛɛ /vi/ to become thin. - ava *mirfaɛɛ*.
استرفع ʔistarfaɛ /vt/ **1** to select for thinness. **2** to consider (too) thin. - vn *ʔistirfaaɛ*; ava *mistarfaɛ*.

ر ف ف [1]
رفّ *raff*[1] *(i)* /vi/ **1** to twitch, flutter. ‖*ɛeen-i bi-triff* I have a premonition. **2** to wobble, move eccentrically (of a wheel or the like). **3** to come or take place unpredictably and/or in abundance. *ʔit-tilifrafaat tinzil tiriff*[i] *min ig-gumhuur* the cables keep flowing in from the public. *ʔil-kutfiina bi-ṭṭarqaɛ wil-baṣaari bi-triff* the cards snap and the trumps come slapping down. - vn *raff, rafafaan*; ava *raafif*.
رفّة *raffa*[1] /inst n, pl *-aat*/ **1** a twitch. **2** a wobble.

ر ف ف [2]
رفّ *raff*[2] *(i)* /vt/ to mend (clothes or carpets) invisibly, darn, patch. - also *rafa*. - vn *raff*; ava *raafif*; pva *marfuuf*.
رفّة *raffa*[2] /inst n, pl *-aat*/ an invisible repair, a darn, a patch. - also *rafya*.
رفّا *raffa*[3] /n/ **1** profession of darning or patching clothes or carpets. **2** darner's establishment or workshop. **3** darner or patcher of clothes or carpets.
اترفّ ʔitraff /vi/ to be invisibly mended, be darned or patched. - iva *mitraff*.

ر ف ف [3]
رفّ *raff* /n pl *ʔarfuf, rufuuf*/ shelf. ‖*ɛala r-raff* left out of consideration, out of the running.
رفّ *riff* <Engl> /n/ *[soccer]* ref, referee. *fiilu r-riff* take off the ref!

ر ف ق
رفق *rafaq*[1] *(a)* /vi/ to behave kindly (towards s.o.). - vn *rifq*; ava *raafiq*.
رفق *rafaq*[2] *(i)* /vt/ to enclose and send (a paper, document etc.). *ʔirfiq il-muzakkira bil-istimaara* enclose the memo with the form. - vn *rafq*; ava *raafiq*; pva *marfuuq*.
رفق *rifq, rifq*↑ /n/ kindness, gentleness. *ʔil-rifq*[i] *bil-ḥayawaan* kindness to animals.
رفقة *rifqa* /n/ companionship, company.
رفق *rafaq*[3] /n/ **1** love affair. *rafaq-i maɛaaha kaan zift* my affair with her was awful. **2** *ʔir-rafaq* one's lover. *ʔir-rafaq bitaaɛ-u* his lover. *ʔir-rafaq bitaɛ-ha* her lover.
أرفق *ʔarfaq* /el/ more/most kind.
رفيق *rifiiq* /n pl *rufaqa, rafaayiq*/ **1** male lover. **2** friend.
رفيق *rafiiq, rafiiq*↑ /n pl *rifaaq, rifaaq, rufaqa*/ **1** colleague, companion. ‖*ʔir-rafiiq il-ʔaɛla* God. **2** form of address and reference used among communists, Comrade. **3** male lover, boyfriend.
رفيقة *rifiiqa* /n pl *-aat*/ **1** female companion. **2** female lover, girlfriend.
مرفق *marfaq* /n pl *maraafiq*/ convenience, facility, anything conducive to ease or comfort. *maraafiq (ɛamma)* public utilities. *marfaq il-muwaṣlaat* the transportation system. *marfaq is-sikka l-ḥadiid* the railway service.
اترفق ʔitrafaq /vi/ to be enclosed (of papers, documents etc.). *laazim iṭ-ṭalab yitrifiq maɛa l-istimaara* the application must be enclosed with the form. - iva *mitrifiq*.
اترفّق ʔitraffaq /vi/ to behave kindly or gently. - ava *mitraffaq*.
رافق *raafiq* /vt/ **1a** to be the lover of. *rafiqt-a-ha l-muddit talat siniin* I was her lover for three years. **1b** to be the companion of. **2**↑ to be attached to, accompany. *ʔid-duktuur il-muraafiq lil-fariiq* the doctor accompanying the team. *siriir muraafiq* companion-bed (e.g., in hospital patient's room, for a relative). - vn *murafqa*↑; ava *miraafiq, muraafiq*↑.
ترافق ʔitraafiq /vi/ to accompany one another. - ava *mitraafiq*.
أرفق *ʔarfaq*↑ = *rafaq*[2]. - vn *ʔirfaaq*; ava *mirfiq, murfiq*; pva *murfaq*.
استرفق *ʔistarfaq* = *ʔitraffaq*.

ر ف ل
رفلة *rafla* /n pl *-aat*/ *[mus]* musical passage repeated at the end of each verse of a song, theme of a song.

ر ف ل ف ر
ريفولفر *rifulfar* <Engl> /n pl *-aat*/ revolver. - also *firfir*.

ر ف ن ت ع
رفتنع *rufantaɛ* /adj */ small, thin. - also *rufayyaɛ, rufannaɛ*.

ر ف ن ن ع
رفنع *rufannaɛ* /adj */ thin, fine. *ʔazmiir rufannaɛ* a fine chisel. *ɣuraz rufannaɛa* fine stitches. - also *rufantaɛ, rufayyaɛ*.

ر ف ه
رفاهيّة *rafahiyya*↑ /n/ luxury, comfort.
رفّه *raffah* **1** /vt/ to give (s.o.) a life of luxury. *miraffah*

nafs-u he is taking good care of himself. **2** /vi/ to provide relaxation or recreation. *ʕasafir-li ʕiskindiriyya ʕaraffah ɛan nafs-i ʃwayya* I'm going to Alexandria to relax for a while. *raaḥu g-gabha yraffahu ɛan ig-gunuud* they went to the front to entertain the troops. - vn *tarfiih*; ava/pva *miraffah*.

ترفيهى *tarfiihi*↑ /adj/ pertaining to relaxation, recreational. *ɛilaag tarfiihi* recreational therapy.

اترفّه *ʕitraffah* /vi/ to live a life of ease, pleasure and comfort. - ava *mitraffah*.

ر ف ى [1]

رفا *rafa (i)* to darn, patch. ‖*makanit rafy ig-gizam* shoe-stitching machine. - also *raff*. - vn *rafy, rafw*; ava *raafi*; pva *marfi*.

رفية *rafya*[1] /inst n, pl *-aat*/ a darn, a patch. - also *raffa:*

ر ف ى [2]

رافية *rafya*[2] <Engl> /n/ raffia.

ر ق ب

رقبة *raqaba* /n: w suff also *riqabit-*; pl *riqaab, ʕirqaab, raqabaat*/ **1** neck. *raqabit il-ɛuud* the neck of an *ɛuud* (see Pl.J, 11). ‖*raqabt-i* I'm yours to command! - *fi-raqabit* on the responsibility of, as in *da kull-u f-raqabt-i* all that's my responsibility, *ʕana raagil ɣalbaan wi-f-raqabt-i koom laḥm* I'm a poor man with many dependents. - *bi-raqabit* far superior to, as in *ḥabl ik-kittaan bi-raqabit ḥabl in-naylun* linen rope is much better than nylon rope. - *ḥaqq-i b-raqabt-i* ≈ I give in, I'll do whatever you want (said under duress). - *ʕiḥna nirmi raqabit-na w-nimfi waraaha* we commit ourselves to something and carry it through. - *wi-raqabt-u taḥt riglee* (he acted) grudgingly, (he acted) under duress. - *ʕilli ybuṣṣ*[1] *l-fooq tiwgaɛ-u raqabt-u [prov]* (he who looks up gets a pain in the neck) he who tries to keep up with the Joneses gets out of breath. - *ɛamb-ak fi-raqabt-i* I take your guilt on myself. - *ɛawwil ir-raqaba* to make proud. - *xalla raqabt(-u) ɛayy is-simsima* to cause (s.o.) to feel small, humiliate. **2** neckpiece (of a garment etc.). *raqaba bilastik* cervical collar. *gazma b-raqaba* boots.

رقبيّة *raqabiyya* /n pl *-aat*/ collar (part of harness of draught animal).

رقبان *raqabaan: ʕabu raqabaan* having no feathers on its neck (of a chicken).

رقبانة *raqabaana* = *raqabaan*.

رقابة *riqaaba, riqaaba*↑ /n pl *-aat*/ **1** censorship, surveillance. **2** *ʕir-riqaaba* censor's department.

رقوبة، راقوبة *raquuba* /n/ egg(s) left in the coop as an inducement to chickens to lay.

رقيب *raqiib* /n pl *ruqaba*/ **1** censor. **2** *[mil]* sergeant. — /no pl/ **3** Just Observer (epithet of God). **4** *[Isl]* angel reputed to accompany one through life, stationed on one's right-hand side, to record one's good deeds (cf *ɛatiid*).

اترقّب *ʕitraqqib* /vt/ to anticipate, expect, be on the look-out for. - ava *mitraqqib*.

راقب *raaqib* /vt/ **1a** to keep under observation. *ma-fii-ʃ ḥadd*[1] *mraqb-ak ɣeer rabb-i-na w-ḍamiir-ak* there's no one watching over you but God and your conscience. **1b** to supervise. *b-addii-hum looḥ tafṣiili w-b-araaqib it-tanfiiz* I give them a diagram and supervise its execution. **2a** to check over, check through. *raaqib daftar il-baṣamaat* he checked through the finger-print file. **2b** to censor. - vn *miraqba*; ava *miraaqib, muraaqib*↑; pva *muraaqab*.

مراقبة *muraqba* /n/ supervision, surveillance, control. *taḥt il-muraqba* under surveillance.

مراقب *muraaqib* /n */ **1** supervisor, overseer. **2** *[acad]* **2a** invigilator, proctor. **2b** highest non-academic administrative officer of a faculty or college. **3** *[bank]* comptroller. **4** *[mil]* warrant-officer.

اتراقب *ʕitraaqib* /vi/ **1a** to be kept under observation. **1b** to be supervised. **2a** to be checked. **2b** to be censored. - iva *mitraaqib*.

ر ق د

رقد *raqad (u)* /vi/ **1** to lie. *ʕil-ḥigaara raqda ɛala qalb ir-raṣiif* the stones are lying slap in the middle of the pavement. **2** to lie abed. *raqadt*[1] *fiiha ḥawaali ʕusbuuɛ* I was laid up with it for about a week. ‖*raqad ɛala l-beeḍ* to brood on its eggs (of a bird). - *raqad ɛala fluus* to stash away one's money, hoard one's money, as in *ʕana raaqid ɛala qirfeen lil-ʕayyaam is-sooda* I've got some money stashed away for bad times. - vn *ruquud, ruqaad, raqadaan*; ava *raaqid*.

رقدة *raqda* /n pl *-aat*/ a sleep, a nap.

مرقد *marqad* /n pl *maraaqid*/ resting place. ‖*marqad il-kilwa [butcher]* loin. - *marqad il-laban [rur]* storage place for milk.

رقّد *raqqad* /vt/ **1** to cause to lie down, prostrate. **2** *[agric]* to layer (shoots). - vn *tarqiid*; ava *miraqqad*.

ترقيدة *tarqiida* /inst n, pl *-aat, taraqiid*/ *[agric]* layer.

اترقّد *ʕitraqqad* /vi/ to be prostrated, be made to lie down. - iva *mitraqqad*.

ر ق ر ق

رقرق *raqraq* /vi/ **1** to weaken, soften up. **2** to well up

(of tears). *ʔid-dumuuɛ miraqraqa f-ɛenee* tears are glistening in his eyes. - vn *raqraqa*; ava *miraqraq*.

ر ق ص

رقص *raqaṣ (u)* **1** /vt/ to perform (a dance). *raqaṣit raqṣa gdiida* she danced a new dance. **2** /vi/ to dance. ‖ *ʔurquṣ lil-qird[i] f-dawlit-u [prov]* (dance for the ape where he reigns) ≈ curry favour with authority no matter how misbegotten. - *zayy illi raqaṣit ɛas-sillim - la ʃafuu-ha ʔahl[i] taḥt[i] wala ʔahl[i] fooq [prov]* like the woman who danced on the stairs - neither the people upstairs saw her, nor those downstairs (of one who is doing s.th. at the wrong time and place). - vn *raqṣ*; ava *raaqiṣ*.

رقص *raqṣ* /n/ dance, dancing. *ʔir-raqṣ iʃ-ʃarqi* belly-dancing. - *ʔir-raqṣ[i] naqṣ [prov]* to dance is to lose dignity. - *ʔawwil ir-raqṣ[i] tiḥangiil [prov]* (when one first dances, one hops) ≈ everything is difficult at the beginning, practice makes perfect.

رقصة *raqṣa* /inst n, pl *-aat*/ a dance.

رقّاص *raqqaaṣ* **1** /n */ male dancer. **2a** /n pl *-aat*/ balance mechanism (of a watch). **2b** pendulum (of a clock).

رقّاصة *raqqaaṣa* /n pl *-aat*/ female dancer. *timuut ir-raqqaaṣa w-wisṭ-a-ha b-yilɛab [prov]* (the dancer dies while her waist (still) undulates) ≈ old habits are unbreakable.

اترقص *ʔitraqaṣ* /vi/ to be danced. *ʔir-raqṣ il-baladi mumkin yitriqiṣ fi-ʔayy[i] ḥitta* the stick dance may be performed anywhere. - iva *mitriqiṣ*.

رقّص *raqqaṣ* /vt/ **1** to cause to dance. *raqqaṣuu-ha ɛala waḥda w-nuṣṣ* they struck up the *waḥda w-nuṣṣ* rhythm for her to dance to. *raqqaṣit ḥawagib-ha* she moved her eyebrows rapidly up and down. **2** *[soccer]* to run rings round (an opposing player). - vn *tarqiiṣ*; ava/pva *miraqqaṣ*.

اترقّص *ʔitraqqaṣ* /vi/ **1** to move as if dancing, sway. **2** to be made to dance. - ava/iva *mitraqqaṣ*.

[1] ر ق ع

رقع *raqaɛ (a)* **1** /vt/ to slam, bang. *ma-tirqaɛ-ʃ il-baab* don't slam the door! *raqaɛt-u ɛalameen* I gave him a couple of hard slaps. *ya naas ma-fii-ʃ ṭuuba ʔarqaɛ-u biiha* hey somebody, isn't there a stone I can clout him with? ‖ *raqaɛit biṣ-ṣoot* she yelled out suddenly, she screamed out. - *raqaɛ miʃwaar* to tackle a (tiresome) errand. **2** /vi/ to emit a banging sound, bang. *ʔiṭ-ṭabl[i] b-yirqaɛ* the drums are banging. - vn *raqɛa, raqaɛaan*; ava *raaqiɛ*; pva *marquuɛ*.

مرقوع *marquuɛ* /adj */ of easy virtue, of loose morals.

اترقع *ʔitraqaɛ* /vi/ to be slammed, be banged. - iva *mitriqiɛ*.

رقّع *raqqaɛ*[1] /vt/ to hit (very hard or a number of times). *raqqaɛ-lu sdaaʏ-u* give him a couple of slaps on the face. - vn *tarqiiɛ*; ava/pva *miraqqaɛ*.

اترقّع *ʔitraqqaɛ*[1] /vi/ to be hit (very hard or a number of times). - iva *mitraqqaɛ*.

[2] ر ق ع

رقعة *ruqɛa* /n pl *ruqaɛ*/ **1** patch (for mending). **2** chessboard. **3** *[obsol]* baking sheet.

رقعة *riqɛa* or *ruqɛa* /n/ cursive calligraphic style (that most commonly used in Arabic handwriting).

رقّع *raqqaɛ*[2] /vt/ to patch. *raqqaɛt il-hiduum wig-gizam* I had my clothes and shoes patched. - vn *tarqiiɛ*; ava/pva *miraqqaɛ*.

مرقّع *miraqqaɛ* /adj */ *[deris]* experienced in the ways of the world, worldly-wise.

اترقّع *ʔitraqqaɛ*[2] /vi/ to be patched. - iva *mitraqqaɛ*.

ر ق ق

رق *raqq (i)* /vi/ **1** to behave graciously or kindly, show favour. *riqq[a] ɛaleena b-naẓara* grace us with a glance! (to a pretty girl). *riqq[i] ɛaleena ya gamiila* favour us, beautiful one! (to a pretty girl). **2** to become thin, delicate or fine. — /vt/ **3** to make thin, delicate or fine. - vn *raqq, riqqa, raqaqaan*; ava *raaqiq*; pva *marquuq*.

رقّة *riqqa* /n/ **1** delicacy, fineness (e.g., of work). **2** sensitivity, gentleness.

رقّ *riqq* /n pl *ruquuq*/ **1** kind of tambourine, with jingles, smaller than the *duff* or the *mazhar*. **2** valve flap. **3** parchment. **4** slavery.

رقّيّة *riqqiyya* = *riqqa*.

رقاق *ruqaaq* /coll n/ paper-thin round sheets of dough, usually dried, used in the preparation of various dishes.

رقاقة *ruqaaqa* /unit n, pl *-aat*/ a sheet of *ruqaaq*.

رقيق *raqiiq* /adj pl *ruqaaq*/ **1** delicate, fine. *qifra ṣadaf raqiiqa* a fine covering of mother-of-pearl. *gazma raqiiqa* a fine pair of shoes. **2** sensitive, gentle. *ʔil-bint[i] di raqiiqa w-roḥ-ha ḥilwa* she's a gentle and pleasant-natured girl.

رقيق *raqiiq* /coll n/ slave(s). *tigaarit ir-raqiiq il-ʔabyaḍ* the white slave trade.

رقايق *raqaayiq* /pl n/ thin or fine sheets or layers of metal. *raqaayiq ʔalamunya* thin sheets of aluminium.

رقيّق *ruqayyaq* /adj */ thin, fine. *ḥittit ɛaṣaaya ruqayyaqa min il-xarazaan* a thin piece of bamboo stick.

أرقّ *ʔaraqq* /el/ thinner/thinnest, finer/finest.

رقّاق *raqqaaq* /n */ player of the *riqq*.
اترق *ʔitraqq* /vi/ to become or be made thin or fine. - ava/iva *mitraqq*.
رقّق *raqqaq* /vt/ to make fine or thin. *wi-nta bi-tbaṭṭaṭ il-ɛagiina raqqaq-ha* while flattening the dough, thin it (too). - vn *tarqiiq*; ava/pva *miraqqaq*.
اترقّق *ʔitraqqaq* /vi/ to be made thin or fine. - iva *mitraqqaq*.

ر ق م [1]

رقم *raqam[1] (u)* /vt/ **1** to notice, spot. *raqamt-u w-huwwa ṭaliɛ mil-beet* I spotted him as he left the house. **2** to keep under surveillance, keep an eye on. *raqim-ku ʕana* I've got my eye on you! - vn *raqamaan, raqm*; ava *raaqim*; pva *marquum*.
رقم *raqam, raqm, raqm* /n pl *ʔarqaam*/ number, numeral, figure. *ʔil-qanuun raqam talattaʃar* law number thirteen. *ʔil-ʔarqaam bi-tquul kida* the figures say so.
أرقم *ʔarqam* /adj, fem *raqma*, pl *ruqm*/ sharp-witted.
اترقم *ʔitraqam* /vi/ **1** to be noticed. **2** to be kept under surveillance. - iva *mitriqim*.
رقّم *raqqam* /vt/ to number, give a number to. *tarraxt il-muzakkira w-raqqamt-a-ha* I dated and numbered the memo. ‖*ɛalamaat it-tarqiim* punctuation marks. - vn *tarqiim*; ava/pva *muraqqam*.
مرقّم *miraqqam* /adj */ sharp-witted, crafty.
اترقّم *ʔitraqqam* /vi/ to be numbered, be given a number. - iva *mitraqqam*.

ر ق م [2]

رقمة *raqma* /unit n, pl *-aat*/ **1** tympanum (usually of fish skin, of, e.g., a drum, a rebab, see Pl.J, 3). **2a** leather strip under the strings of a zither (*qanuun*) that serves to absorb vibrations. **2b** ornamental guard-plate on the face of a *ɛuud*, below the rosette, for protection against the plectrum (see Pl.J, 13).
رقم *raqam[2]* collective noun of *raqma*.

ر ق و see ر ق ى [1]: *raqw, raqwa*

ر ق ى [1]

رقى *raqa[1] (i)* /vt/ to ward off the evil eye from (s.o.) by means of incantations and censing, perform a *raqw* for (s.o.). *ʔin-nabi raqa naqt-u min gamaɛt-u* the Prophet censed his she-camel against the evil eye of his companions (an incantation from the *raqwa* ceremony). - vn *raqw*; ava *raaqi*; pva *marqi*.
رقوة *raqwa* /inst n, pl *-aat*/ ceremony of incantations and censing performed over something to protect it against the evil eye.
رقية *raqya* = *raqwa*.
اترقى *ʔitraqa* /vi/ to have a *raqwa* performed for one. - iva *mitriqi*.
استرقى *ʔistarqa* /vt/ to invoke protection (for s.o.) through the performance of a *raqwa*. *raʃeet-ak wi-starqeet-ak min ɛeen illi ma yṣalli ɛan-nabi* form of incantation over a sick person. - vn *ʔistirqa*; ava *mistarqi*.

ر ق ى [2]

رقى *riqi (a)* /vi/ to rise, advance, progress. *riqi f-waẓift-u* he rose in his job. - vn *raqyaan*; ava *raaqi*.
رقى *raqa[2] (a)*: *raqa bi-* to help to advance. *bi-nwaddii-hum il-madaaris ɛalaʃaan yirqu b-maṣr* we send them to school so that they may help Egypt to progess. - vn *ruqiyy*↑; ava *raaqi*.
راقى *raaqi* /adj */ refined, high-class. *zooq raaqi* refined taste. *ʔil-ʔazyaaʃ ir-raqya* high fashion garments, haute couture.
أرقى *ʔarqa* /el/ more/most refined, more/most high-class.
رقّى *raqqa* /vt/ **1** to promote. ‖*raqqa ɛaskari* to queen a pawn (in chess). **2** to refine, polish up (manners). - vn *tarqiyya, tarqiya*↑; ava/pva *miraqqi*.
ترقية *tarqiyya, tarqiya*↑ /n pl *-aat*/ promotion.
اترقى *ʔitraqqa* /vi/ **1** to be promoted. **2** to be refined, be polished up (of manners). - iva *mitraqqi*.

ر ك ا م

ركامة *rukaama* <It *ricamo*> /n/ broderie anglaise.

ر ك ب

ركب *rikib (a)* /vt/ **1** to mount, board, ride. *kaanit rakba ḥuṣaan* she was riding a horse. *xallii-hum yirkabu turmaay* let them take a tram! ‖*ʔil-ʔarḍ[i] ma-yirkab-haa-ʃ in-niil fi-gamiiɛ il-bilaad* the Nile does not rise over the land throughout the country. - *rikib raas-u* he got to be stubborn. - *rikib dimaax-u ʔinn* ... he got it into his head that .... **2** to dominate, have the upper hand over, boss around. *yiṣaḥḥ[i] xaddaam yirkab ʔaxuu-k* is it proper for a servant to boss your brother around? *miraat-u rakbaa (wi-mdaldila riglee-ha)* his wife has him right under her thumb. ‖*rakb-u ɛafriit* (1) he is possessed by a demon. (2) he's in a bad humour, he's likely to blow up if provoked. — /vi/ **3** to mount, board, ride. *ḥ-awaṣṣal-ak li-ḥadd[i] ma tirkab* I'll go along with you till you find transport. ‖*bi-yirkab fooq dimax-na* he bosses us around. **4** to be installed.

ʕik-kablaat rikbit ɣalaṭ the cables were laid incorrectly. *fii mikrufoon raakib* there is a microphone set up. ‖ *muxx-u* (or *ʕaql-u*) *raakib ʃimaal* ≈ he is pig-headed. - vn *rukuub, rukuuba*; ava *raakib*; pva *markuub*.

ركوبة *rukuuba* /n/ **1** /pl *rakaayib*/ riding animal. **2** /pl *-aat*/ a ride, a lift.

راكب *raakib* /n pl *rukkaab*/ passenger.

مركوب *markuub* /n pl *marakiib*/ type of shoe or slipper with a turned-up toe. ‖ *ya-bn il-markuub* ≈ you son of an old boot! - *ʔabu markuub* shoebill.

ركبة *rakba* /n pl *-aat*/ a ride.

ركبة *rukba* /n pl *rukab*/ **1** knee. ‖ *lir-rukab* in great quantity, as in *ʔakl*^{i} *lir-rukab* masses of food. - *rukab-i saabit* ≈ my knees turned to jelly (from fear). - *manẓar yiḫill* (or *yisayyib*) *ir-rukab* a terrifying sight. **2** node (on the stem of a plant). **3** *[mech]* joint. **4** knee-pad, knee-guard.

ركاب *rikaab* /n pl *-aat*/ pair of stirrups.

ركّيب *rakkiib* /n pl *rakkiiba*/ skilled rider.

مركب *markib* /masc and fem n, pl *maraakib*/ boat, ship. ‖ *ʔil-markib illi fiiha rayyiseen tiɣraq [prov]* (a ship with two captains will sink) ≈ too many cooks spoil the broth.

مركبة *markiba* /n pl *-aat*/ small boat.

مراكبي *marakbi* /n pl *-yya*/ boatman. ‖ *ʕuzuumit marakbiyya* an invitation not seriously intended (because one cannot take up an invitation from a boatman passing in midstream).

اتركب *ʔitrakab* /vi/ to be mounted, be boarded, be ridden. - iva *mitrikib*.

ركّب *rakkib* /vt/ **1** to cause to mount, cause to board. *rakkibuu ɣala ḫṣaan* they mounted him on a horse. *rakkibt-a-ha ḫanṭuur* I put her in a carriage. *rakkibt-ak waraaya saraqt il-ɛeeʃ [prov]* (I gave you a lift behind me (on my donkey) and you stole the bread) you took advantage of my kindness. **2** to put under the domination of. ‖ *ʔiwɛa titma ʔlis la-yrakkib-ak if-feex miit ɛafriit* don't make fun or the Shaykh will send a hundred demons to possess you! **3** to mount, install, fix up. *ʔana mrakkib gilda lil-ḫanafiyya* I've put a washer on the tap. *rakkibt*^{i} *tilifoon* I installed a telephone. *ʔig-gazmagi rakkib-li nuṣṣ*^{i} *naɛl* the cobbler put on a half-sole for me. **4** to combine, compound, synthesize. *b-aaxud il-maqaaṭiɛ ig-gayyida w-ʔarakkib-ha ɣala baɛḍ* I take the outstanding verses and combine them. - vn *tarkiib*; ava/pva *mirakkib*.

تركيبة *tarkiiba* /inst n, pl *-aat, tarakiib*/ **1** installation, fitment. **2** compound, mixture.

مركّب *murakkab* /adj/ **1** composite, compound. — /n pl *-aat*/ **2** *[chem]* compound. *murakkabaat ɣiza ʔiyya* nutriments. **3** component, ingredient. **4** *[psych]* complex. *murakkab naqṣ* inferiority complex.

اتركّب *ʔitrakkib* /vi/ passive of *rakkib*. - iva *mitrakkib*.

ارتكب *ʔirtakab* /vt/ to commit (e.g., a mistake, a crime). - vn *ʔirtikaab*; ava *mirtikib, murtakib*.

ر ك ت see ر ا ك ت : *raakit*

ر ك ت ت

ريكوتا، ريكوته *rikutta* <It> /n/ ricotta (a soft unsalted type of white cheese).

ر ك د

ركد *rakad (i)* /vi/ to lie stagnant (of water). ‖ *ʔis-suuq raakid* the market is sluggish. - vn *rukuud, rakadaan*; ava *raakid*.

ر ك ر د ر

ريكوردر *rikurdar* <Engl> /n pl *-aat*/ tape-recorder.

ر ك ز

ركز *rikiz, rakaz*^{1} *(i)* /vi/ to come to rest, achieve stability, settle on an even keel. *ʔil-moog hidi wil-markib rikzit* the waves subsided and the boat stopped tossing. *sibt is-sillim raakiz ɣal-ḫeeṭ* I left the ladder leaning against the wall. *ma-fii-ʃ xaddaam yirkiz ɣandi gumɛa* I can't get a servant to stay with me a week. - vn *rakazaan, rukuuz*; ava *raakiz*.

ركز *rakaz*^{2} *(i)* /vt/ to set securely, position, rest. *rakazt*^{i} *ʠurt-i ɣala draaɛ-i w-nimt* I rested my forehead on my arm and slept. *rakaz il-ɛatala taḥt il-ɛarabiyya w-rafaɛ-ha* he positioned the crowbar under the car and lifted it. - vn *rakazaan, rakz*; ava *raakiz*; pva *markuuz*.

أركز *ʔarkaz* /el/ more/most stable or steady.

ركاز *rikaaz* /n/ residue.

ركوز *rukuuz* /n/ *[mus]* keynote of a scale.

ركيزة *rakiiza* /n pl *rakaayiz*/ **1** brace, support. **2** *[mus]* short double length of pipe immediately following the mouthpiece of the *ʔarɣuul* and *muzmaar*. (see Pl.J, 22).

مركز *markaz* /n pl *maraakiz*/ **1** centre, central point. *markaz id-dayra* the centre of the circle. ‖ *markaz it-tuql* centre of gravity. - *markaz baṣari* focal point. **2** headquarters, centre of activity. *ɣamalt il-ɢahwa markaz-i* I made the café my headquarters. *markaz buḫuus* research centre. *maraakiz tadriib* training centres. **3a** administrative area within a province, and under the government of a senior police officer (*maʔmuur*). **3b** town from which the area known as a *markaz* is administered. **3c** building housing the main administrative offices, central police station etc., of the

area known as a *markaz*. **4a** placing, position. *ʕil-laɛɛiiba luhum maraakiz zayy*[i] *laɛɛiibit ik-koora* the players' positions are the same as those of soccer players. **4b** standing, status. *ʕiḫfaẓ markaz-ak* remember your position (and behave accordingly). *raagil ma-luu-ʃ markaz* a nobody. see further under م ر ك ز.

مركزى *markazi* /adj/ central, main. *ʕil-bank il-markazi* the Central Bank. *ʕil-maḫkama l-markaziyya* the central court.

اتركز *ʕitrakaz* /vi/ to be set securely, be positioned. - iva *mitrikiz*.

ركّز *rakkiz* **1** /vt/ to concentrate, bring together. *ɛabiir murakkaz* concentrated fragrance. **2** /vi/ to concentrate, think concentratedly. *b-azaakir lil-imtiḫaan wi-ɛaayiz ʕarakkiz* I'm studying for the exam and want to concentrate. - vn *tarkiiz*; ava *mirakkiz*; pva *murakkaz*.

اتركّز *ʕitrakkiz* /vi/ to be concentrated. - iva *mitrakkiz*.

ارتكز *ʕirtakaz* /vi/ to centre one's weight, balance. - vn *ʕirtikaaz*; ava *mirtikiz*.

ر ك ض

ركض *rakaḍ (u)* /vi/ to run, gallop. - vn *rakḍ, rukuuḍ*; ava *raakiḍ*.

ر ك ع

ركع *rakaɛ (a)* /vi/ **1** to kneel, get down on one's knees. **2** *[Isl]* to bow from the waist in the performance of the ritual prayers. - vn *rukuuɛ*; ava *raakiɛ*.

ركعة *rakɛa* /n pl *-aat*/ prescribed part of the Islamic ritual prayer. *farḍ il-ɛiʃa ʕarbaɛ rakɛaat* the prescribed number of *rakɛas* for the last evening prayer is four.

اتركّع *ʕitrakkaɛ* /vi/ *[Isl]* to pray supererogatory ritual prayers (independently of a group of worshippers). - ava *mitrakkaɛ*.

ر ك ف و ر

ركفور *rukfoor, rikfuur* <Fr *Roquefort*> /n/ any blue cheese.

ر ك ك [1]

ركّ *rakk*[1] *(u)* /vi/ to become broody (of a hen). - vn *rakk, rakakaan*; ava *raakik*.

ركّ *rakk*[2] /n/ reliance. *ʕinta lli ɛaleek ir-rakk* you are the one (we) depend on. *rakk-ak ɛad-dawa taxd-u b-intiẓaam wi-nta tṭiib* you make sure that you take the medicine regularly and you will recover. *ʕir-rakk*[a] *ɛala* it's up to, it depends on, as in *ʕiḫna raḍyiin laakin ir-rakk*[a] *ɛaleeku* we're content but it's all up to you, *ʕir-rakk*[a] *ɛar-riggaala* it all depends on the men.

تركيكة *tarkiika* /n pl *tarakiik*/ excuse, pretext.

اتركّك *ʕitrakkik* /vi/ to use a pretext. *ʕinta b-titrakkik ɛala kalaam-u ɛaʃaan ma-tgii-ʃ* you are using what he said as an excuse not to go. *kull*[i] *ma yiigi door-u yitrakkik ɛala ḫaaga ɛaʃaan ma-yidfaɛ-ʃ* every time his turn comes he finds excuses for not paying. *taɛaala ma-titrakkik-ʃ* come along; don't try to wriggle out! - vn *tarkiik*; ava *mitrakkik*.

ر ك ك [2]

ركاكة *rakaaka* /n/ weakness, feebleness (of language).

ركيك *rakiik* /adj/ weak, poor, defective (of language). *targama rakiika* poor translation. *luɣat-u rakiika* he uses language incorrectly.

ر ك ك [3]

ركّة *rukka: ɛilm* (or *ṭibb*) *ir-rukka* quack medicine.

ر ك ك و ه

رككوه *rukukuuh* <perh. Fr> /n/ rococo. ‖*ɣurzit rukukuuh [needlew]* French knot.

ر ك ل ا ج see ر ك ل ا ش : *riklaaj*

ر ك ل ا ش

ركلاش *riklaaʃ* (also *riklaaj*) <Fr *réglage*> /n/ *[mech]* regulating, adjusting. *riklaaʃ ɛarabiyya* car tuning. - also *riglaaʃ, riglaaj*.

ر ك ل ا م

ركلام *riklaam* <Fr *réclame*> /n pl *-aat*/ advertisement.

ر ك م [1]

اتراكم *ʕitraakim*↑ /vi/ to accumulate; mount, pile up. - vn *taraakum*; ava *mitraakim, mutaraakim*.

ر ك م [2] see ر ك ا م : *rukaama*

ر ك ن

ركن *rakan (i)* **1** /vt/ **1a** to put aside. *ḫ-arkin il-filuus di liz-zaman* I'll set this money aside for a rainy day. ‖*rakan il-ɛarabiyya* he parked the car. **1b** to shelve, leave undealt with. *ʕil-muwaẓẓafiin bi-yirkinu g-gumhuur bis-saɛaat* the officials keep the public waiting by the hour. **2** /vi/ to halt, come to a stop. *ʕirkin hina ya rayyis* stop here, driver! *ʕis-saaɛa b-tirkin* the watch keeps stopping. *ʕil-ḫuṣaan bi-yirkin* the horse balks. - vn *rakanaan, rakn*; ava *raakin*; pva *markuun*.

ركنة *rakna* /n pl *-aat*/ instance noun of *rakn*. ‖*siib-ak ya*

waad min ir-rakna di stop this lazing around doing nothing, my boy!

ركن *rukn* /n pl *ʕarkaan*/ **1** corner. **2** essential, basic, corner-stone. *ʕarkaan id-diin* the essentials of religion. *ʕarkaan if-ʃiik* the essential information that must be put on a cheque by the signatory to make it valid (i.e., date, amount, signature etc.). ‖ *ʕarkaan ḥarb [mil]* general staff. *-raʕiis ʕarkaan [mil]* chief-of-staff. *-rukn[i] gaamid* an influential man. **3** corner motif in tent appliqué work (see Pl.H, 23).

ركنى *rukni* /adj/ corner. *ḍarba rukniyya [soccer]* corner kick.

اتركن *ʕitrakan* /vi/ **1a** to be put aside. ‖ *ʕana ɛaawiz ʕatrikin ɛal-maɛaaf* I want to retire. **1b** to be shelved, be left undealt with. **2** to lean. ‖ *ʕilli yitrikin ɛalee yitrikin ɛala ḥeeṭa mayla* (who leans on him leans on a leaning wall) he's not to be relied on. - ava/iva *mitrikin*.

ركّن *rakkin* /vt/ *[sport]* to put (a ball) into a corner (e.g., of a tennis court). - vn *tarkiin*; ava/pva *mirakkin*.

ارتكن *ʕirtakan* /vi/ to rely, depend. - ava *mirtikin*.

ر ك ى [1]

راكى *raaka* /vt/ *[naut]* to dock (a ship), berth (a ship). - vn *mirakiyya*; ava/pva *miraaki*.

اتراكى *ʕitraaka* <It *attraccare*> /vi/ *[naut]* to dock, berth (of a ship). *munawrit taraaki* berthing manoeuvre. - vn *taraaki*; ava *mitraaki*.

ر ك ى [2]

راكية *rakya* /n pl *aat*/ bonfire. *rakyit naar* open fire, camp-fire.

ر ل ت ت

روليت *rulitt* <Fr *roulette*> /n pl *-aat*/ **1** dressmaker's tracing-wheel. **2** roulette.

ر ل ل ا

رولّة *rulla* <Engl> /n/ decorator's roller.

ر ل و ه

رولوه *rulooh* <Fr *rouleau*> /n pl *-aat*/ roller (for setting hair), hair-curler.

ر ل ى ه

ريليه *rileeh* <Engl> /n pl *-aat*/ *[elec]* relay switch.

ر م ا ن see also ر و م ا

رومانى *rumaani* /adj */ Roman. *ʕil-muṣarɛa r-rumaniyya* Roman-style wrestling.

ر م ت ز م

روماتزم *rumatizm* <prob Engl> /n/ rheumatism. - also *maratizm*↓, *muraṭizm*↓, *marmatizm*↓.

ر م ح

رمح *ramaḥ (a)* **1** /vt/ to cause (a horse, donkey etc.) to gallop. *ma-tirmaḥ-ʃ il-ḥuṣaan wi-huwwa ʃaarib* don't gallop the horse after it has been drinking. **2** /vi/ to gallop, charge (especially of a horse, donkey etc.). *ʈuul in-nahaar bi-nirmaḥ wara l-ʕawraaq di* all day we've been charging about after those papers. ‖ *zimma yirmaḥ fiiha wabuur* a conscience broad enough for a train to charge about in, a somewhat elastic conscience. - vn *ramḥ, rimaaḥa*; ava *raamiḥ, raamiḥ*.

رمح *rumḥ* /n pl *rimaaḥ, rumuuḥ*/ **1** lance, javelin. ‖ *ɛala sinn[i] w-rumḥ* ≈ well-known, renowned, as in *ʕana zakiyya bint il-ḥagg[a] ɛali l-fakahaani ɛala sinn[i] w-rumḥ* I'm Zakiyya, the daughter of Hagg Ali the fruit-seller, the biggest bigshot in the neighbourhood. **2** upright handle of a plough (see Pl.D, 18). **3** welding electrode, welding-rod.

رمّاح *rammaaḥ* /n */ spearman, lancer.

مرماح *mirmaaḥ* /n/ *[obsol]* race course. ‖ *ʕooḍa zayy il-mirmaaḥ* a very spacious room. *-ʈiliɛ yigri bil-mirmaaḥ* he took to his heels.

رمّح *rammaḥ* /vt/ to cause to gallop. - vn *tarmiiḥ*; ava *mirammaḥ*.

ر م خ

رامخ *raamix* /coll n/ fermented unripe dates.

ر م د [1]

رمدان *ramdaan* /adj/ infected with ophthalmia (of the eyes), suffering from ophthalmia.

رمد *ramad* /n/ ophthalmia, inflammation of the eyes. *ramad ṣadiidi* purulent ophthalmia. *ramad ḥubaybi* trachoma.

رمدى *ramadi* /adj/ pertaining to ophthalmia.

رمديّة *ramadiyya*↓ /n/ eye hospital.

رمّد *rammad* /vi/ to develop ophthalmia, get sore eyes, get sore (of the eyes). - vn *tarmiid*; ava *mirammad*.

ر م د [2]

رماد *rumaad* /n/ **1** ash. *rumaad sigaara* cigarette ash. *ʕarbaɛ ir-rumaad [Chr]* Ash Wednesday. **2** earth, soil.

رمادى *rumaadi* /adj/ grey.

ر م ر م

رمرم *ramram* /vi/ **1a** to scavenge. *ʕil-firaax bi-tramram fiz-zibaala* the chickens scavenge off the rubbish. **1b** to

eat continual small snacks between meals. *ma-b-yistafid-ʃ^{i} mil-ʕakl^{a} ɛaʃaan ṭuul in-nahaar bi-yramram* the food's wasted on him because he spends the whole day stuffing himself with snacks. **2** to mix with those below one's station, go slumming. *ʕig-gamɛa ramramit* the university is taking in all and sundry. - vn *ramrama*; ava *miramram*.

رمرام *rumraam* /n pl *ramariim*/ **1** leftover leaves and other debris of harvested crops. **2** good-for-nothing person, poor weak and pitiably useless person.

رمرام *rimraam* /n/ low scavenging person, one totally devoid of pride.

رمروم *ramruum* = *rumraam*.

ر م ز

رمز *ramaz↑ (u, i)* /vi/ to be symbolic, stand as a symbol. *ʕil-bint illi b-tiẓhar fiṣ-ṣuura b-turmuz lik-kiniisa l-masiḥiyya* the girl who appears in the picture symbolizes the Christian church. - vn *ramz*; ava *raamiz*; pva *marmuuz*.

رمز *ramz* /n pl *rumuuz*/ symbol, sign. ‖ *bir-ramz* in code.

رمزى *ramzi* /adj/ symbolic. *ʕiṯ-ṭalaba b-yaxdu mablaɣ ramzi bass* the students are paid only a token sum.

رمزيّة *ramziyya* /n/ symbolism.

رمزيّات *ramziyyaat* /pl n/ symbols, cipher, code.

رمّز *rammiz* /vt/ to assign a symbol or code to. - vn *tarmiiz*; ava *mirammiz*.

ر م س see ر م ى س : *ramiis*

ر م ش

رمش *ramaʃ (i)* /vi/ to blink (as a nervous habit), wink. ‖ *miʃ ɋaadir yirmiʃ* (he can't bat an eyelid) he's petrified with fright. - vn *ramʃ, ramaʃaan*; ava *raamiʃ*.

رمشة *ramʃa* /inst n, pl *-aat*/ a wink, a blink.

رمش *rimʃ* /n pl *rumuuʃ*/ eyelash. ‖ *ḍarab* (or *raɋaɛ* or *razaɛ* etc.) *rimʃ* to give a look through narrowed eyes (implying either coquetry or malicious envy), as in *ḥ-arɋaɛ-ha kaam rimʃ agib-ha l-ʕarḍ* I'll shoot her a few piercing glances and knock her flat, *ḍarabit-u rimʃ^{i} ɛiyi min saɛit-ha* she shot him an evil look and he fell sick then and there. - *rimʃ il-ɛeen* light cheap fabric with a narrow woven stripe.

رمشة *rimʃa* /unit n/ an eyelash.

مرمّشاتى *mirammiʃaati* /n pl *-yya*/ one who constantly winks or blinks.

ر م ض

رمضان *ramaḍaan* /n/ Ramadan, ninth month of the Muslim year, during which Muslims fast daily from dawn to sunset. *ramaḍaan kariim* traditional greeting used during this month (to guests ≈ sorry not to offer you any food because of the fast).

ر م ق

رمق *ramaɋ* /n/ spark of life. *ma-ɛad-ʃ^{i} fiyya ramaɋ* I am on my last legs. *liḥiɋ il-ɋaṭr^{a} ɛala ʕaaxir ramaɋ* he just caught the train when he was on the point of collapsing. ‖ *luɋma tsidd^{i} ramaɋ-ha* a bite of food to keep her going.

ر م ل [1]

رمل *raml* /n pl *rimaal↑*/ sand. ‖ *ḥagar raml* sandstone. - *ḍarb ir-raml* divination by sand.

الرمل *ʕir-raml* /prop n/ the beach at Alexandria from Victoria to Mahattet el-Raml and the district behind it.

رملة *ramla* /n/ **1** /coll n/ = *raml*. **2** /unit n, pl *-aat*/ a specific lot or kind of sand. *ʕir-ramla di ma-tinfaɛ-ʃ^{i} lil-buna* this sort of sand is no good for building.

رملى *ramli* /adj/ sandy, pertaining to or consisting of sand. *ʕarḍ^{i} ramliyya* sandy soil. *malɛab ramli* dirt pitch. ‖ *ḥagar ramli* sandstone. - *balaḥ ramli* black, elongated variety of date of the *ruṭab* type.

رمّل *rammal* **1** /vt/ to polish with fine sand. **2** /vi/ to become grainy in texture. *ɛasal mirammil* honey which has begun to crystallize. - vn *tarmiil*; ava/pva *mirammil*.

اترمّل *ʕitrammal^{1}, ʕitrammil^{1}* /vi/ to be polished with fine sand. - iva *mitrammal, mitrammil*.

ر م ل [2]

أرملة *ʕarmila, ʕarmala* /n pl *ʕaraamil*/ widow. ‖ *ʕibn^{i} ʕarmala* one whose bad upbringing has led him to be corrupt.

اترمّل *ʕitrammal^{2}, ʕitrammil^{2}* /vi/ to become a widower or widow. ‖ *ʕitrammilit ɛal-ɛiyaal* she devoted herself to her children, refusing to remarry after the death of her husband. - ava *mitrammal, mitrammil*.

ر م م [1]

رمّ *ramm (u)* /vt/ **1** to repair, renovate. **2** to strengthen, revitalize (the body). *ʕakla trumm il-ɛaḍm* (a meal that strengthens the bones) a wholesome meal. - vn *ramm*; ava *raamim*; pva *marmuum*.

مرمّة *miramma* /n pl *-aat*/ repair job.

اترمّ *ʕitramm* /vi/ **1** to be repaired, be renovated. **2** to be strengthened, be revitalized. - iva *mitramm*.

رمّم *rammim^{1}* /vt/ to restore, renovate. *rammimu baɛḍ il-ʕasaar* they restored some of the historic monuments. - vn *tarmiim*; ava/pva *mirammim*.

ترميم *tarmiim* /n pl *-aat*/ restoration, renovation.
اترمّم *ʔitrammim* /vi/ to be restored, be renovated. - iva *mitrammim*.

ر م م [2]
رمّة *rumma* /n/ all the appurtenances (of s.th.). ‖*xad-u b-rummit-u* ≈ he took it lock, stock and barrel.
رمّة *rimma* /n pl *rimam*/ 1 piece of carrion, something putrid. *ʔiz-zibaala xallit il-beet rimma* the rubbish has made the house putrid. 2 *[abus]* foul person. *ya rimam* you filthy bastards!
رمّم *rammim*[2] /vi/ to become putrid. - ava *mirammim*.

ر م م ا ن
رمّان، رولمان *rummaan*[1] <Engl trade name *Rollman*>: *rummaan bily* ball-bearings.
رمّانة *rummaana*[1] /unit n, pl *-aat*/ 1 a ball-bearing. 2 a spherical castor.

[1] ر م ن
رمّان *rummaan*[2] /coll n/ pomegranate(s).
رمّانة *rummaana*[2] /unit n, pl *-aat*/ 1 a pomegranate. 2 movable counterpoise of a steelyard. 3 fetlock.
رمّاني *rummaani* /adj invar/ dark red in colour.

[2] ر م ن see ر م ا ن : *rumaan, rumaani*

ر م ى
رمى *rama (i)* /vt/ 1a to throw, fling. *ramit nafs-a-ha mik-kubri* she threw herself from the bridge. *baṣṣeet laqeet faḫḫaat raami gittit-u ʕalayya* suddenly a beggar rushed upon me. *raaḫ marmi fil-ʔarḍ* he collapsed on the ground. ‖ *ʔirmi bayaaḍ-ak* cross my palm with silver! (said by fortune-tellers). - *ramaa-li salaam* he extended a greeting to me. - *rama ʕaleeha yamiin* he uttered an oath of divorce against her. - *rama gawaab* to post a letter. 1b to shoot, shoot at. 1c to play, lay (a card). ‖ *rama ʕaleeha fluus* to stake money on it. 1d to throw out, throw away. *ʔirmi z-zibaala* throw out the garbage! 1e to desert, leave neglected. *sibt-i-ni mbaariḥ marmi hina* yesterday you left me here high and dry. 2 to produce, yield. *bi-yirmi ward*[a] *ʔaṣfar* it produces yellow flowers. *ʔil-faddaan bi-yirmi ʕaʃar ʔaraadib walla* each feddan yields ten ardebs of wheat. 3 *[constr]* to lay or cast (concrete). *ramu l-xarasaana* they laid the concrete. *ramu (xarasaanit) il-ʔasaas* they laid (the concrete for) the foundations. *ramu s-saqf* they laid the (concrete) roof. *ramu l-ʕimdaan* they cast the (concrete) pillars. — /vi/ 4 *[rur]* to give a feeding (to an animal). *ʔirmi lil-baqara* feed the cow. 5 *[coarse]* to ejaculate, shoot one's lot. - vn *ramy*; ava *raami*; pva *marmi*.
¶ *rama ʕala* (1) to lead to. *ʔiʃ-ʃaariʕ bi-yirmi ʕala xaraaba* the street leads to a patch of waste ground. (2) to aim at, take sights on. *bi-yirmi ʕala l-ʕalaama* he aims at the marker. *hiyya ramya ʕenee-ha ʕala ḫadd*[i] *taani* she has her eye on someone else.
رمية *ramya* /inst n, pl *-aat*/ 1 a throw. *kull-u-hum bi-yitrimu nafs ir-ramya* they all come to the same bad end. 2 a shot. 3 *[agric]* a quantity (of, e.g., wheat) threshed at one time.
رميّة *rimiyya* /n/ one worthy only of neglect, one not worth bothering about.
رماية *rimaaya* /n/ shooting (as a sport).
مرمى *marma* /n pl *maraami*/ 1 *[sport]* goal (i.e. at which one aims). 2 range. *marma l-bunduqiyya* the range of the rifle.
اترمى *ʔitrama* /vi/ passive of *rama*. - iva *mitrimi*.
رمّى *ramma* /vt/ 1 to throw (a number of objects, or a number of times). 2 to discard in quantity. - ava/pva *mirammi*.
مرمّى *mirammi* /adj */ lying around in abundance, found in abundance and therefore neglected.
اترمّى *ʔitramma* /vi/ to be thrown (of a number of objects, or a number of times). - iva *mitrammi*.

ر م ى س
رميس *ramiis* <Fr *remise*>: *ʕarabiyya* (or *taks*[i]) *ramiis* *[obsol]* provincial taxi or hire car without a meter.

ر م ى و
روميو *rumyu* <prop name> /n/ Romeo, big-time lover.

ر ن ج
رنجة *ringa* <Gr *renga*> /coll n/ smoked herring(s), kipper(s).
رنجاية *ringaaya* /unit n, pl *-aat*/ a smoked herring, a kipper.

ر ن خ
رنخ *rannax* 1 /vt/ to soak, steep (until rotten or fermented). 2 /vi/ to lie idle, do nothing. *ʔaṣḥaab-ak qarrabu yiṭlaʕu ʕal-maʕaaʃ wi-nta lissa mrannax fis-sanawi* your friends are almost ready to go on a pension and you're still stuck in secondary school! - vn *tarniix*; ava/pva *mirannax*.

(ر ن د)
رند *rand* /n/ *[bot]* bay.

روند *rund* <Fr *ronde*> /n pl *-aat/ [mus]* semibreve, whole note.

ر ن د ا د

روندا *rundaad* <Fr *rondade*> /n pl *-aat/ [gym]* take off, spring.

ر ن د ف و

رندفوه *randifuuh* <Fr> /n pl *-aat/* rendezvous (particularly of lovers).

(ر ن ك)

رنك *rank* /n pl *runuuk/* circular piece in tent appliqué work (see Pl.H, 19).

رنك *rank: hank*[i] *w-rank* see *hank*.

ر ن م

رنّم *rannim* or *rannim* /vi/ *[Chr]* to chant (hymns, responses etc., in unison). - vn *tarniim, tarniim*; ava *mirannim, mirannim*.

ترنيمة *tarniima* /n pl *-aat, taraniim/ [Chr]* hymn.

ر ن ن

رن *rann (i)* /vt/ **1** to ring. *rinn ig-garaz ɛaʃaan yiṣḥu* ring the bell so they'll wake up! **2** to hit hard. *xud il-wad-da rinn-u* take this boy and give him a beating! *ḫ-arinn-ak ɋalam yiṭayyar ɛeen-ak* I'll give you a slap on the face that'll knock out your eye! — /vi/ **3** to emit a bell-like sound. *ʔit-tilifoon bi-yrinn* the telephone is ringing. *ɛot-ha baɋa yrinn*[i] *fil-ʔooɋa* her voice was ringing through the room. *ʔil-ɋalam baɋa yrinn*[a] *ɛala ɋafaa* the blows resounded on the back of his neck. **4** to go hang, go to the dogs. *miraat-u sabit-u yrinn* his wife let him go to the dogs. *xallii yirinn* let him go to hell! - vn *rann, raniin*; ava *raanin*; pva *marnuun*.

رنّة *ranna* /inst n, pl *-aat/* a ringing sound. *ʃanna w-ranna* see *ʃanna*.

رنّان *rannaan* /adj */ ringing, jingling reverberating, resounding. ‖*ʃooka rannaana [mus]* tuning-fork.

اترنّ *ʔitrann* /vi/ passive of *rann*. - iva *mitrann*.

ارتنّ *ʔirtann* = *ʔitrann*. - ava *mirtann*.

(ر ه)

راء *rih*[1] /fem n, pl *-aat/* tenth letter of the Arabic alphabet. - also *raa, raaʔ*.

ره *rih*[2] <It *re*> /n/ king (in cards).

ريه *rih*[3] <perh It *re*> /n/ *[mus]* **1** re. **2** the note D.

ر ه ب

رهب *rahab*[1] *(a)* /vt/ to find terrifying. *rahabt il-manẓar* I was terrified by the sight. - vn *rahba*; ava *raahib*; pva *marhuub*.

رهب *rahab*[2] *(i)* /vt/ to terrify. *ʔil-manẓar rahab-ni* the sight terrified me. - ava *raahib*; pva *marhuub*.

راهب *raahib* /n/ **1** /pl *ruhbaan/ [Chr]* monk. **2** /pl *rawaahib/* pointer (shaped like a praying monk) on the scale of a weighing-machine (which, when exactly opposite its fellow, indicates that the scales are level). see further under ر ه ب ن

راهبة *rahba* /n pl *-aat/ [Chr]* nun.

رهيب *rahiib* /adj/ terrible, awful, terrific. *mataaɛib rahiiba* terrible inconveniences. *kimmiyyaat rahiiba* terrific quantities.

إرهاب *ʔirhaab* /n/ intimidation, terrorism.

إرهابي *ʔirhaabi* /n */ terrorist.

ر ه ب ن see also ر ه ب

رهبنة *rahbana* /n/ *[Chr]* monasticism.

اترهبن *ʔitrahban* /vi/ **1** *[Chr]* to become a monk or nun. **2** to remain unmarried. - ava *mitrabhin*.

ر ه د ل

رهدل *rahdil, rahdil* **1** /vt/ to pull out of shape. *law ʃ-ʃaraab maɋaas-u ma-kanit-ʃ*[i] *rigl-u rahdilit-u kida* had the socks been his size, his foot would not have made them so out of shape. **2** /vi/ to become flabby, become out of shape. *gism-u rahdil mil-ɛaya* his body became flabby because of illness. ‖*hiduum-u mrahdila* his clothes are untidy. - *maa-lu kida mrahdil fi-hduum-u* why is he so unkempt! - vn *rahdala*; ava/pva *mirahdil*.

اترهدل *ʔitrahdil* /vi/ passive of *rahdil*. - iva *mitrahdil*.

ر ه ر ط

رهرط *rahraṭ* **1** /vt/ to loosen, make baggy or flabby. **2** /vi/ to become loose, become baggy, become flabby.

رهريط *ruhreeṭ* <Copt> /n/ wet mud.

اترهرط *ʔitrahraṭ* /vi/ **1** to become flabby, become soft. **2** to be made flabby. - ava/iva *mitrahraṭ*.

ر ه ف

رهيف *rahiif= ruhayyif*.

رهّيف *ruhayyif* /adj */ delicate, sensitive. *ɛayyil ruhayyif* a delicate child. ‖*ɋalb-u ruhayyif* he has a soft heart.

أرهف *ʔarhaf* /el/ more/most delicate.

مرهف *murhaf* /adj/ delicate, sensitive. (of feeling or senses).

رهّف *rahhaf* /vt/ to make soft, make delicate. *ɛiʃt-u n-nawaɛmi di rahhafit-u* this easy life of his has softened him. - vn *tarhiif*; ava/pva *mirahhaf*.

اترهّف *ʕitrahhaf* /vi/ to be made delicate, be made soft. - iva *mitrahhaf*.

ر ه ق [1]

مراهق *muraahiq* /n */ teenager, adolescent, immature person.

مراهقة *murahqaʔ* /n/ adolescence, immaturity.

ر ه ق [2]

أرهق *ʕarhaqʔ* /vt/ to exhaust, wear out. *ma-tirhiq-haa-ʃ bi-ʈalabaat-ak* don't overwhelm her with your demands. - vn *ʕirhaaq*; ava *murhiq*; pva *murhaq*.

ر ه م

مرهم *marham* /n pl *maraahim*/ ointment, salve. ‖ *ʕiid-u marham* his very touch is soothing. - *kalaam-u marham* his words are soothing.

ر ه ن

رهن *rahan (i)* /vt/ **1** to pawn. *hiyya rahna sivit-ha* she has pawned her jewelry. **2** to mortgage. **3** to keep (s.o.) waiting for a long time. *ʕinta ɧa-tirhin-ni ɛandak leeh* why are you keeping me hanging about like this? - vn *rahn*; ava *raahin*; pva *marhuun*.

رهن *rahn* /n pl *ruhunaat, ruhuun*/ **1** pawn, deposit. *ʕil-ɋazaayiz ɛaleeha rahn* there's a deposit on the bottles. ‖ *rahn it-taɧɋiiɋ [leg]* under investigation. - *kaan raɧn ifart-i* he was at my beck and call. **2** *[bank]* mortgage.

رهينة *rahiina* /n pl *rahaayin*/ **1** hostage. **2** pledge, something given as a pledge, surety.

اترهن *ʕitrahan* /vi/ **1** to be pawned. **2** to be mortgaged. **3** to be kept waiting. - iva *mitrihin*.

راهن *raahin* /vt/ to bet with. - vn *rahaan, murahna*; ava *miraahin*.

رهان *rahaan* /n pl *-aat*/ sum of money wagered (between two parties). *min ɛeer rahaan* without any bet, (just) for fun.

مراهنات *murahnaat* /pl n/ bets (laid, e.g., on a race). *ɖariibit murahnaat* taxes paid on wagers and bets.

اتراهن *ʕitraahin* /vi/ **1** to make a bet. **2** passive of *raahin*. - ava/iva *mitraahin*.

ر ه و ا ن

رهوان *rahawaan* <T *rahvan* from P> /n/ young and powerful horse. *zayy ir-rahawaan* very fast.

ر و ا ن

روانة *rawaana* <T *revani* from P> /n/ *[rur]* type of hard cake (made with a mixture of corn and wheat flour, eggs, sugar, clarified butter and a raising agent).

ر و ب [1]

راب *raab (u)* /vi/ to curdle (of milk). - vn *rawabaan*; ava *raayib*.

رايب *raayib* /adj/ curdled (of milk). *laban raayib* curdled milk. ‖ *ɋaṭaɛ il-ɧaliiba wir-rayba* (he cut off the fresh milk and the curdled) he cut off all his help, as in *ʕabuu ɋaṭaɛ ɛannu l-ɧaliiba wir-rayba* his father cut him off without a penny.

روب *roob [1]* /n/ thin paste, mixture (of, e.g., cement, mud) with a high proportion of water.

روبة *rooba* /n pl *-aat*/ unit noun of *roob*.

روّب *rawwib* /vt/ **1** to curdle (milk). ‖ *rawwib zabaadi* to prepare yoghurt (from milk). **2** to add water to (s.th. dry) to make a paste or mix. - vn *tarwiib*; ava/pva *mirawwib*.

اتروّب *ʕitrawwib* /vi/ **1** to be curdled (of milk). **2** to have water added so as to make a paste. - iva *mitrawwib*.

ر و ب [2]

روب *roob [2]* <Fr *robe*> /n pl *ʕarwaab*/ **1** dressing gown, house-coat, bathrobe. **2** *[ɋcad]* gown.

ر و ت ر

روتر *rootar* <prop n *Reuter*> /n/ newsmonger.

ر و ج [1]

راج *raag (u)* /vi/ to flourish, be or become current or in demand. *ʂinaaɛa rayga* a booming industry. *di rayga fis-suuɋ* this is selling briskly. - vn *rawaag, rawaag, rawagaan*; ava *raayig, raayig*.

روّج *rawwag* or *rawwig* /vt/ to help to thrive, promote. *tarwiig il-ʕifaɛaat* the spreading of rumours. - vn *tarwiig*; ava *mirawwig*.

اتروّج *ʕitrawwag* or *ʕitrawwig* /vi/ to be promoted, be backed. - iva *mitrawwag, mitrawwig*.

ر و ج [2]

روج *ruuj* <Fr> /n/ rouge. ‖ *ʂubaaɛ ruuj* a lipstick.

ر و ح

راح *raaɧ [1]* /vi/ **1** to go. *bi-truuɧ if-fuvl imta* when do you go to work? *ruuɧ min hina* go away! ‖ *min hina w-raayiɧ* from this point on. - *raayiɧ gayy* there and back, as in *bi-yikkallif xamsiin ɋirʃ[i] raayiɧ gayy* the return trip costs fifty piastres. - *miʃ ɛaarif (la) yiruuɧ wala yiigi* he is stuck, he is stranded, as in *miʃ ɛarfa (la) ʕaruuɧ wala*

ʕaagi mil-ɛiyaal dool I am stuck because of these kids. - la raaḥ wala ga insignificant, as in humma tneen gineeh la raahu wala gum they are merely two pounds. - ḥa-yruḥ-laha il-... a whole ... will go, as in ɛala ma-yirgaɛ ḥa-tkuun raaḥit laha l-gumɛa by the time he returns, a whole week will have gone by, ɛala ma nidfaɛ il-xiliww[i] wi-nbayyaq iʃ-ʃaqqa wi-ngaddid il-ɛaff[a] ḥa-truḥ-laha l-xamast alaaf gineeh by the time we have paid the key-money, redecorated the flat, and renewed the furniture, it (the expenses) will have cost as much as five thousand pounds. **2a** to go (for good). ʕil-maḥfaẓa raaḥit minni fis-suuq I lost the wallet in the market. ʕilli raaḥ raaḥ what's gone is gone. ḥadsa kaan mumkin yiruuḥ fiiha an accident in which he could have been a goner. ‖ ʕir-raagil ḥa-yruuḥ minni the man (my husband) is dying on me. - ʕana ruḥt[i] xalaṣ I'm done for. - ya raaḥit ya gat win or lose, as in ʕidxul fil-beɛaa-di ya raaḥit ya gat join in this deal and take the risk. **2b** to disappear, fade away. buqɛit iʃ-ʃaay ma-truḥ-ʃ[i] bil-mayya a tea stain does not come out with water. ʃakl-u raaḥ ɛan baal-i I cannot remember what he looks like. **3** /preverb/ to up and (do s.th.), go and (do s.th.). b-abuṣṣ-i-lu qaam raaḥ ḍarib-ni I was just looking at him, and he went and hit me. ʕig-gineeh wiqiɛ fi-balkonit-ha raaḥit mixabbiyyaa the pound note fell on her balcony and straight away she rushed and hid it. - vn mirwaaḥ, rawaḥaan; ava raayiḥ.

¶ raaḥ ɛala (1) to go unperceived by, happen without the comprehension of (s.o.). kalaam-u bi-yruuḥ ɛaleehum the things he says are beyond them. ma-truḥ-ʃ[i] ɛalee ḥaaga he doesn't miss a thing. raaḥit ɛalee nooma he overslept. (2) to slip from the grasp of, be lost to. ʕahu maat wil-filuus illi stalaf-ha minni raaḥit ɛalayya now he's dead and I'll never get back the money he borrowed from me. raaḥit ɛalee l-furṣa he missed the opportunity.

راح raaḥ[2] /w foll imperf/ particle indicating future action. ʕana miʃ raaḥ ʕakallim-ak taani I'm not going to speak to you again. raaḥ yiigu ʕimta when are they going to come?

روح rooḥ /fem n, pl ʕarwaaḥ/ **1** soul, spirit. ʕil-gism[i] wir-rooḥ the flesh and the spirit. xasaayir fil-ʕarwaaḥ fatalities, loss of life. ʕilli fiih rooḥ who(ever) is still alive. ɛilm il-ʕarwaaḥ occult science, black magic. taḥḍiir il-ʕarwaaḥ calling up spirits. ‖ bi-sabaɛt irwaaḥ with a charmed life, with nine lives. - rooḥ-u ṭilɛit (1) he died. (2) he was exasperated. - bi-yṭallaɛ fir-rooḥ he is dying. - rooḥ-i baqit fi-manaxiir-i I reached the end of my tether. - roḥ-ha ḥilwa she is good-natured. - yurudd ir-rooḥ (returns the departing soul to the body) pleasing, as in kalam-ha yrudd ir-rooḥ she is very nice to talk to. - ya rooḥ-u ʕilli ... how great is his patience that he ..., as in ya roḥ-hum illi qadriin yiɛiifu maɛa n-naas di how patient they are to be able to live with these people! - ma-ɛand(-)ʃ rooḥ li- to have no patience with, as in ma-ɛandii-ʃ rooḥ lil-ɛiyaal I have no patience with children. - ya rooḥ-i term of endearment ≈ dear, darling. - rooḥ-i ḥa-truuḥ (1) I'm going to faint. (2) I'm absolutely exhausted. - ʕir-rooḥ bir-rooḥ very dear to one another, as in ʕaṣḥaab ir-rooḥ bir-rooḥ very close friends. - ya rooḥ ma-baɛd-ik rooḥ one has but a single life (in folk stories), as in lamma ramuu fil-mayya qaɛad yiɛaafir wi-ya rooḥ ma-baɛd-ik rooḥ when they threw him in the water he went on fighting for his life. **2** self. qult[i] l-rooḥ-i I said to myself. faakir rooḥ-ak ʕeeh what do you think you are? leeh titɛibu roḥ-ku kida you shouldn't have taken so much trouble. qatal rooḥ-u he killed himself. waqqaɛit il-ʕakl[a] ɛala roḥ-ha she spilt the food on herself. ʕil-ɛayyil iṣṣayyar ɛala rooḥ-u the baby wet himself. ‖ kabb[a] ɛala rooḥ-u (1) he spilt (s.th.) on himself. (2) he ejaculated spontaneously. - naayim ɛala rooḥ-u (he is) unaware of what goes on. - ʃayfa roḥ-ha she pampers herself. - minnu l-rooḥ-u by oneself, as in ʕitɛallimit iṭ-ṭabx[i] minha l-roḥ-ha she learned to cook all by herself. - ḥa-tmawwit roḥ-ha ɛala ... (1) she is dying to get ..., she is longing for .... (2) she is passionately fond of ..., she is devoted to .... **3** spirit, mood. rooḥ il-haziima defeatism. **4** essence. rooḥ il-yasmiin essence of jasmine. rooḥ il-xall concentrated vinegar. rooḥ in-naʃaadir spirit of ammonia. **5** barrel (of a gun). bunduqiyya b-roḥeen a double-barrelled shotgun. **6** pipe (of a wind instrument).

الروح ʕir-rooḥ /masc/: ʕir-rooḥ il-qudus *[Chr]* the Holy Spirit. ʕir-rooḥ il-ʕamiin *[Isl]* the Archangel Gabriel.

روحي rooḥi↑ /adj */ spiritual. ʕabb[i] rooḥi spiritual father, spiritual mentor.

روحاني roḥaani /adj */ **1** spiritual. **2** spiritually-minded.

روحانيّة roḥaniyya /n/ spirituality.

روحانيّات roḥaniyyaat /pl n/ spiritual teachings, spiritual insights.

أرواح ʕarwaaḥ /coll n/ cheap scented and coloured boiled sweets.

أرواحة ʕarwaaḥa /unit n, pl -aat/ a scented and coloured boiled sweet.

أرواحاية ʕarwaḥaaya = ʕarwaaḥa.

راحة raaḥa[1] /n/ **1** rest, ease, relaxation, leisure. ʕana b-aḥibb[i] qillit ir-raaḥa I like to keep active. ‖ ḥasab raaḥit il-qumaaʃ without stretching the cloth (or: mak-

ing allowance for the design of the cloth). *bi-raḥt-ak* at your convenience. *-beet raaḥa [rur]* lavatory. *-bir-raaḥa* slowly and carefully, as in *ʕiṭlaʕ is-sillim bir-raaḥa* take it easy up the stairs! *- ʃir-rayy[i] bir-raaḥa [agric]* gravitational irrigation. *-ʃayl-u ɛala kfuuf ir-raaḥa* treating him luxuriously, feather-bedding him. *-xad raḥt-u* to take one's ease, make o.s. comfortable, as in *ʕuqɛud wi-xud raḥt-ak* sit down and take your ease, *ʃil-mutoor xad raḥt-u* the motor settled to a steady beat. *-taɛab-ak raaḥa* ≈ it's a pleasure to serve you! *-raaḥit il-ʃarwaaḥ* mode in Arabic music beginning on B flat and having E flat and F sharp. **2** /pl *-aat*/ rest period, break. *qaṭaɛt[i] raḥt-i* I interrupted my leave.

راحة *raaḥa[2]* /n/ palm (of the hand).

ريح *riiḥ[1]* /n/ **1** /pl *riyaaḥ*/ wind. ‖*zayy ir-riiḥ* (as fast) as the wind. *-fooq ir-riiḥ [naut]* to the windward. *-ɛala ʃaaxir ir-riiḥ [naut]* full and by. *-ʃeef yaaxud ir-riiḥ mil-balaaṭ [prov]* (what does the wind take from the tiles?) ≈ how can you get water out of a stone? *- ʃilli yizraɛ ir-riiḥ yuḥṣud il-ɛawaaṣif [prov]* who sows the wind reaps the whirlwind. *- ʃilli tgiib-u r-riyaaḥ taxd-u z-zawaabiɛ [prov]* (what the winds bring the storms take) ≈ easy come, easy go. **2** /pl *ʃaryaaḥ*/ flatulence. *ṭallaɛ riiḥ* he broke wind.

ريح *riiḥ[2] [rur]* **1** /n pl *ʃaryaaḥ*/ side, end. *ʃil-beet maftuuḥ min talatt iryaaḥ* the house is open on three sides. **2** (also *fi-riiḥ*) /prep/ next to, beside. *kaanit qaɛda (f-)riiḥ-i* she was sitting next to me.

ريحة *riiḥa* /n pl *rawaayiḥ*/ **1** smell, odour. *ʃammeet riiḥit ir-riḥaan* I smelled the smell of basil. ‖*ma-ḥadd[i]-ʃ yiqbal-lu riiḥa* nobody can stand him. **2** fumes. *gamadaanit nitriik ikkasarit wir-riiḥa btaɛit-ha kalit kull il-ɣasiil* a carboy of nitric acid got broken and the fumes ate away the laundry. **3** perfume. *ʕizaazit riiḥa* a bottle of perfume. **4** essence or concentrate used for flavouring. *ɛaʃaan yiqayyaɛu k-karfa bi-yzawwidu ɛalee riiḥa* they add extra flavouring to it to get rid of the taint. **5** whiff, trace. *ma-ɛanduu-ʃ riiḥa miz-zooq* he hasn't the least consideration (for others). *ʕid-dinya ma-fi-haa-ʃ wala riiḥit ir-raḥma* the world contains not a trace of mercy. ‖*ʕahwa ɛala r-riiḥa* (Turkish) coffee with very little sugar.

ريحان *riḥaan* /n/ sweet basil.

أريح *ʃaryaḥ* /el/ more/most comfortable, more/most convenient.

ريّاح *rayyaaḥ* /n pl *-aat*/ large irrigation canal.

مروحة *marwaḥa* /n pl *maraawiḥ*/ **1** fan. ‖*naas ɛala ʕulub-hum maraawiḥ* people who are not easily upset. **2** *[agric]* helical blade of an Archimedes' screw. **3** *[auto]* front quarter vent. – *ʃil-maraawiḥ* /pl n/ **4** the lungs.

مروحى *marwaḥi* /adj/ fan-shaped.

مريوح *maryuuḥ* /adj */ **1** demon-possessed. **2** *[deris]* upset.

مريح *muriiḥ* /adj */ easy, comfortable. *kursi muriiḥ* a comfortable chair. *raagil muriiḥ* an easy man to deal with. *ʃaʕsaaṭ muriiḥa* easy installments. *mihna muriiḥa* a profitable and genteel profession. ‖*ʃakl-u miʃ muriiḥ* he has a disagreeable appearance.

روّح *rawwaḥ* **1** /vt/ to take or send home. **2** /vi/ to go home. *ɛaayiz ʃarawwaḥ li-ʃahl-i* I want to go home to my folks! - vn *tarwiiḥ; mirwaaḥ*; ava/pva *mirawwaḥ*.

¶ *rawwaḥ ɛan in-nafs* to relax, rest. *ʃuqɛud-lak yomeen fi-skindiriyya rawwaḥ ɛan nafs-ak* take a couple of days in Alexandria and have a rest.

التراويح *ʃit-tarawiiḥ* /pl n/ *[Isl]* supererogatory prayer (of eight, twelve or twenty *rakɛas*) performed after the evening prayer in Ramadan.

ريّح *rayyaḥ* /vt/ **1** to give comfort or relief to, ease. *ʃuf-li ʃayy[a] ḥaagà trayyaḥ-ni* find me anything that will give me relief. *ʃil-ḥukuuma ʃuxl-a-ha ʃinnaha tsahhil ḥayaat in-naas wi-trayyaḥ-hum* it's the government's job to make people's lives easier and more comfortable. *ʕuul ʃintà ɛaayiz ʃeeh biz-ẓabṭ - rayyaḥ-ni* tell me what it is exactly that you want - don't keep me on tenterhooks! *ma-tithawwa wi-trayyaḥ-na* go and take an airing and give us a break! *xud in-nooɛ illi bi-yrayyaḥ-ku* take the sort that suits you best. *rayyaḥ baal-ak* (or *ʕalb-ak*) set your mind at rest! *ḥabbeet ʃarayyaḥ-ak min il-miʃwaar* I wanted to spare you the journey. *tihaddi baal-ak wi-trayyaḥ sirr-ak* she'll calm your mind and give you inner peace (praise of a bride). **2** (also *rayyaḥ min il-ɛiiʃa*) *[slang]* to relieve (of life), kill. **3** to give the correct set to. *nisarraḥ ʃawwil tasriiḥa ɛaʃaan nirayyaḥ ʃaɛr-u* we give a first comb-through to get the set of his hair. *ʃin-naggaar rayyaḥ il-baab* the carpenter fixed the door so that it would open and close easily. **4** *[soccer]* to receive (a ball) on the foot and control and position it. **5** to perfume. – /vi/ **6** to take a rest, take a break. *lamma ʃaɛraʕ ʃaʕuum ʃarayyaḥ* when I start sweating I stop and take a rest. *bi-yiftaxalu wardiyyiteen mitwaṣliin wi-baɛdeen yirayyaḥu yoom* they work two consecutive shifts and then take a day off. **7** to move under force as though seeking something against which to rest. *ʃil-ɛarabiyya rayyaḥit ɛalayya* the car rolled back into me. *ʃil-ḥeeṭa rayyaḥit* the wall settled. *ʃil-ɛagala rayyaḥit minni* the tyre went flat on me. **8** to give off a bad smell. *fii ṣeefi ma-yɛiʃ-ʃ - yiswadd[i]*

wi-ynattin wi-yrayyaḥ there's a summer variety that doesn't last - it turns black and putrid and gives off a bad smell. - vn *taryiiḥ, tarwiiḥ*; ava/pva *mirayyaḥ*.

مريّح *mirayyaḥ* /adj */ **1** in easy circumstances, well-off. **2** calm, deliberate, unflustered.

اتريّح *ʕitrayyaḥ* /vi/ passive of *rayyaḥ*. - iva *mitrayyaḥ*.

اتراوح *ʕitraawaḥ* /vi/ to range, vary. *ʕil-ʕugra b-titraawaḥ ma been gineeh wi-tneen* the wages vary between one and two pounds. - ava *mitraawaḥ*.

ارتاح *ʕirtaaḥ* /vi/ **1a** to rest, relax, take one's ease. *ʕirtaaḥ fis-siriir* take a rest in bed! *laazim tirtaaḥi baʕd il-wilaada* you must take it easy after the birth. *bi-nsiib il-ʕarḍ[i] mirtaaḥa ʃahr* we give the land a rest for a month. **1b** to feel comfortable, feel at ease. *bi-tirtaḥ-li* she feels at home with me. *ʕana miʃ mirtaaḥ lig-gamaaʕa di* I'm suspicious of those people. ‖*ḍamiir-u rtaaḥ* his conscience was satisfied. - *ʠalb-u rtaaḥ* he felt relieved. **2** to find relief. *ʇaraʃt irtaḥt* I vomited and felt better. *ʕiddaa-ni birʃaam wi-rtaḥt[i] ʃwayya* he gave me some pills and I felt a little better. - vn *ʕirtiyaaḥ*; ava *mirtaaḥ*.

ارتياح *ʕirtiyaaḥ* /n/ satisfaction, contentment, pleasure. *bi-rtiyaaḥ* willingly, gladly.

مرتاح *mirtaaḥ* /adj */ in easy circumstances, well-off.

استريّح *ʕistarayyaḥ, ʕistirayyaḥ* /vi/ **1** to rest, relax, take one's ease. *ʕuʠʕud wi-starayyaḥ* sit down and make yourself comfortable! *ʕissanadt[a] ʕal-ḥeeṭa ʃwayya ʕastirayyaḥ* I leant against the wall a while to rest. - the imperative form *ʕistariiḥ* occurs in the proverb: *ʕil-baab illi yiigi minnu r-riiḥ sidd-u wi-stariiḥ* (shut the door that lets in the wind, and you will have peace) stop up the source of trouble and relax. **2** to feel comfortable, feel at ease. *bi-tistarayyaḥ-li* she feels at ease with me. *ʕana miʃ mistarayyaḥ lil-ḥikaaya di* I don't feel easy about the affair. **3a** to find relief. *baṭn-i tkalbiʃ wi-m-astarayyaḥ-ʃ[i] ʁeer lamma ʕanaam fis-siriir* my stomach gets tied up in knots and I only feel better if I have a lie-down. **3b** *[euphem]* to die. - ava *mistarayyaḥ, mistirayyaḥ*.

استراحة *ʕistiraaḥa* /n pl *-aat*/ **1a** rest-room. **1b** rest-house. **2** interval, intermission, half-way break.

مستريّح *mistarayyaḥ, mistirayyaḥ* /adj */ **1** in easy circumstances, well-off. **2** well-fitting, capable of moving easily (of, e.g., a lock, a door).

ر و ح ن

روحن *rawḥan* /vt/ to cause (s.o.) to waver, sway (s.o.) in his opinion. - vn *rawḥana*; ava/pva *mirawḥan, mirawḥan*.

مروحن *mirawḥan, mirawḥan* /adj */ easily swayed in one's opinions.

اتروحن *ʕitrawḥan* /vi/ to become or be made uncertain or indecisive. - ava/iva *mitrawḥan*.

ر و د [1]

رائد *raaʕid* /n pl *ruwwaad*/ **1** guide, leader. ‖*raaʕid ʃabaab* youth leader, youth organizer. **2** pioneer. ‖*raaʕid ʃaḍaaʕ* astronaut. **3** *[mil]* major. *raaʕid baḥri* lieutenant-commander. *raaʕid ʇayyaar* squadron-leader.

رويدا *ruwaydanʔ* /adv/ slowly, gently.

مرادة *muraada* /n pl *-aat*/ *[rur]* beaten path down to the water's edge where women wash clothes, etc.

ر و د [2]

مرود *marwid* /n pl *maraawid*/ blunt-edged probe for applying *kuḥl* and the like to the eyes.

ر و س [1] see also ر ء س

روّس *rawwis* /vt/ **1** to give a heading to. **2** to tie up (an animal), moor (a ship). - vn *tarwiis*; ava/pva *mirawwis*.

ترويسة *tarwiisa* /n pl *-aat, tarawiis*/ **1** heading (of, e.g., a newspaper article). **2** stake for tethering an animal.

اتروّس *ʕitrawwis* /vi/ **1** to be given a heading. **2** to be tied up (of an animal), be moored (of a ship). - iva *mitrawwis*.

ر و س [2] see also ا ر س ى

روسى *ruusi* **1** /adj */ Russian. **2** /n/ **2a** the Russian language. **2b** /pl *ruus*/ a Russian.

ر و ش

روش *rawaʃ (i)* <perh Copt> /vt/ to distract, disturb. *baʇʇal maʃy[i] fil-ʕooḍa - rawaʃt-i-ni* stop walking up and down the room - you're unnerving me! - vn *rawaʃ, rawaʃaan*; ava *raawiʃ*; pva *marwuuʃ*.

روشة *rawʃa* /n/ distractedness, mental confusion. *ʁamaluu-li rawʃa f-dimaaɤ-i* they got me into a tizzy. *da ʕaaxir rawʃa* he's extremely scatter-brained.

مروش *marwuuʃ* /adj */ scatter-brained, always in a flap.

أروش *ʕarwaʃ* /adj, fem *rooʃa*, pl *ruuʃ*/ scatter-brained, always in a flap.

ر و ش ن

روشن *rooʃan* <P *raushan*> /n pl *rawaaʃin*/ *[obsol]* air vent, skylight.

ر و ض [1]

روض *rooḍ: rooḍ il-farag* /prop n/ district of Cairo, on the east bank of the Nile to the north of Boulak, the site of Cairo's main wholesale fruit and vegetable market.

روضة *rooḍa* [1] /n pl *-aat, riyaaḍ*/ kindergarten.

الروضة *ʔir-rooḍa* /prop n/ Roda, an island in the Nile at Cairo.

رياضة *riyaaḍa* /n/ **1** sports, physical exercise. **2** mathematics.

رياضى *riyaaḍi* /adj */ **1** pertaining to sport. *naadi riyaaḍi* sports club. *tarbiya riyaḍiyya* physical education. *ʔir-rooḥ ir-riyaḍiyya* the sporting spirit, sportsmanship. **2** pertaining to mathematics, mathematical.

روّض *rawwaḍ*↑ /vt/ to tame. - vn *tarwiiḍ*; ava *mirawwaḍ*.

مروّضاتى *mirawwaḍaati* /n pl *-yya*/ animal trainer.

ريّض *rayyaḍ* /vt/ to exercise. - ava/pva *mirayyaḍ*.

اتروّض *ʔitrawwaḍ* /vi/ to be tamed. - iva *mitrawwaḍ*.

اتريّض *ʔitrayyaḍ* /vi/ to take exercise. - ava *mitrayyaḍ*.

ر و ض [2]

روضة *rooḍa* [2] <It *roda*> /n/ *[naut]* bight (of a rope).

ر و ع

روعة *rawɛa* /n/ marvellousness, splendour, magnificence. *ʔil-ʔaɣaani l-qadiima fi-muntaha r-rawɛa* the old songs are really great.

أروع *ʔarwaɛ* /el/ more/most marvellous, splendid, magnificent etc.

رائع *raaʔiɛ* /adj */ marvellous, splendid, magnificent.

رائعة *raaʔiɛa* /n pl *rawaaʔiɛ*/ amazing, impressive or awesome thing. *rawaaʔiɛ il-musiiqa l-ɛarabiyya* the masterpieces of Arabic music.

مريع *muriiɛ* /adj/ terrifying, awe-inspiring.

روّع *rawwaɛ* /vt/ to frighten, awe. - ava/pva *mirawwaɛ*.

ر و ق

راق *raaq* [2] *(u)* /vi/ **1** to become serene, peaceful, clear or uncluttered. *ʔig-gaww* [i] *raaq* the weather cleared. *ʔil-baḥr* [i] *raaq* the sea became calm. *ʔil-mayya raaqit* the water became clear. *ʔiʃ-ʃawaariɛ raaqit* the streets cleared. *xud l-utubiis min ʔawwil il-xaṭṭ* [i] *ykuun raayiq* if you take the bus from the beginning of the line, there'll be plenty of room. *ʔil-muruur maaʃi b-rawaaqa* the traffic is flowing easily. ‖ *ʔig-gaww* [i] *raq-lak* your path is clear. - *baal-u raayiq* (1) his mind is clear of distractions. (2) he's in a good mood. **2** to recover (from sickness), come round. *ɛamalt il-muṣraan wi-ruqt* I had my appendix out and recovered. - vn *rawaaqa, rawaqaan*; ava *raayiq*.

رواقة *rawaaqa* /n/ calmness, clarity, peacefulness, serenity. *ḥ-aɛmil iʃ-ʃuɣl* [i] *badri ɛala rawaaqa* I'll do the work early while I'm fresh and there are no distractions. *bi-yfakkar bi-rawaaqa* he thinks well. *ʔiqraa ɛala rawaaqa* read it when you have some peace and quiet.

رايق *raayiq* /adj/ clear, pure. *mayya rayqa* clear water, translucent water. *ʔalwaan rayqa* clear light colours.

رواق *ruwaaq, riwaaq* /n pl *-aat, ʔarwiqa*/ section of living-quarters, dormitories and workrooms of the students at the old Azhar.

روّق *rawwaq* /vt/ **1** to clear, calm. *ʔiʃ-ʃaay rawwaq muxx-i* the tea cleared my head. *ʔil-buliis rawwaq iʃ-ʃariɛ* the police cleared the street. ‖ *rawwaq (dammak)* calm down! come to your senses! **2** to cause to recover, cause to feel better. *ʔin ʃa-lla z-ziyaara trawwaq-ak ʃiwayya* I hope the visit makes you feel better. **3** to tidy up, set straight. *rawwaqit il-ʔooḍa* she tidied up the room. *rawwaqi s-siriir* tidy up the bed! - vn *tarwiiq*; ava *mirawwaq*.

ترويقة *tarwiiqa* /inst n, pl *-aat, tarawiiq*/ a tidying-up, a freshening-up.

اتروّق *ʔitrawwaq* /vi/ passive of *rawwaq*. - iva *mitrawwaq*.

ر و ك

روك *rook: maal ir-rook [obsol]* public property.

ر و ل [1]

رِوال *riwaal* /n pl *ʔirwila*/ *[agric]* ridge dividing one irrigation basin from the next (see Pl.E, 20).

روّل *rawwil* /vt/ *[agric]* to prepare the irrigation basins for (a piece of land), by digging out the irrigation ditches and piling up the ridges separating each basin. - vn *tarwiil*; ava/pva *mirawwil*.

اتروّل *ʔitrawwil* /vi/ *[agric]* to have irrigation basins prepared (of land). - iva *mitrawwil*.

(ر و ل) [2]

رول *rool* [1] <Engl> /n pl *-aat*/ *[leg]* agenda.

رول *rool* [2] <perh Engl> /n pl *-aat*/ roll, spool, coil.

ر و م [1]

رام *raam: ɛala ma yuraam*↑ as one would desire, as in *ʔin-nahar-da ṣiḥḥit-i miʃ ɛala ma yuraam* my health today isn't as good as I would have wished. *kull* [i] *feeʔ kaan ɛala ma yuraam* everything was as it should be.

مرام *maraam* /n/ wish, desire. *ʔeeh maraam-ak mil-ḥikaaya* what do you hope for out of the affair? ‖ *gat ɛal-maraam* it was just what was wanted, it turned out fine.

ر و م [2]

روّم *rawwim* /vt/ to dress (stone). - vn *tarwiim*; ava/pva *mirawwim*.

اتروّم *ʔitrawwim* /vi/ to be dressed (of stone). - iva *mitrawwim*.

ر و م [3]

رومى *ruumi* /pl *ruum, ʔarwaam*/ **1 a**↓ /adj/ Greek. *baqqaal ruumi* a Greek grocer. **1 b**↓ /n/ a Greek. — /invar/ **2** /adj/ of the less common sort, not of the standard local Egyptian sort (in opposition to *baladi* q.v.). *kalb[i] ruumi* any dog of an identifiable breed, a dog not of a common-or-garden street type. *qutta ruumi* any cat of an identifiable breed, a cat not of a common-or-garden street type. *ʔil-ʕeef dura wil-kalaam ruumi [prov]* the bread is coarse, the talk highfalutin (of pretentiousness). ‖ *diik ruumi* turkey cock. - *farxa ruumi* turkey hen. - *filfil ruumi* sweet peppers, bell peppers. - *bidingaan ruumi* large round egg-plants. - *gibna ruumi* type of hard yellow cheese. **3** /coll n/ turkeys.

روم *ruum* /coll n/ members of a Greek-speaking church. *ruum urtuduks* Greek Orthodox. *ruum katuliik* Greek Catholic(s). *huwwa ruum katuliik* (or *ruum katuliiki*) he is a Greek Catholic.

ر و م ا

روما *rooma* <It *Roma*> /prop n/ Rome. see further under ر م ا ن

رون see ر و ا ن : *rawaana*

ر و ن د

راوند *rawind* /coll n/ rhubarb.

ر و ن ق

رونق *rawnaq* /n/ brightness, glitter, glamour.

ر و ى [1]

روى *rawa[1] (i)* /vt/ **1** to irrigate. *ʈurumbit rayy* irrigation pump. **2** to quench (thirst), satisfy the desires of (s.o.). ‖ *yirwi l-ʔalb* it refreshes the heart, as in *kalaam-u ʃarbaat yirwi l-ʔalb* he talks beautifully, it's refreshing to hear him, *ʔilli yirwi l-ʔalb [vendor's cry]* (cool syrup) that refreshes the heart! - vn *rayy, riwiyya*; ava *raawi*; pva *marwi*.

ريّة *rayya* **1** /inst n, pl *-aat*/ a (single) irrigation. **2** /prop n/ female given name. *rayya wi-skiina* two notorious murderesses active in Alexandria in the nineteen-thirties.

ريّان *rayyaan* /adj/ well-watered, fresh and green, not withered. *rayyaan ya figl [vendor's cry]* fresh juicy radishes!

التروية *ʔit-tarwiya: yoom it-tarwiya [Isl]* the day before *yoom ʕarafaat* on which pilgrims prepare themselves by filling their water-pots, washing, donning the *ʔiḥraam*, if they are not wearing it, etc.

اتروى *ʔitrawa[1]* /vi/ **1** to be irrigated. **2** to be quenched (of thirst), be satisfied (of desire). - iva *mitriwi*.

ارتوى *ʔirtawa↑* = *ʔitrawa*.

ر و ى [2]

روى *rawa[2] (i)* /vt/ to relate, narrate (a story, account). - vn *riwaaya*; ava *raawi*; pva *marwi*.

رواية *riwaaya* /n pl *-aat*/ **1a** novel. **1b** (also *riwaaya tamsiliyya*) stage play. **2** story, account.

راوى *raawi* /n * and pl *ruwaah*/ transmitter, relater, narrator.

روائى *riwaaʔi* **1** /n */ novelist. **2** /adj */ fictional. *film[i] rwaaʔi* fiction film.

اتروى *ʔitrawa[2]* /vi/ to be related, be narrated (of a story, account). - iva *mitriwi*.

اتروّى *ʔitrawwa* /vi/ to reflect, consider, think carefully. *ʔitrawwa ʔabl[i] ma tiʕmil ʔayy[i] ḥaaga* think well before you do anything. - vn *tarawwi*; ava *mitrawwi*.

ر ى ا ل

ريال *riyaal* <Sp *real*> /n pl *-aat, ʔiryila, riyʔla*↓/ twenty piastres, twenty-piastre piece.

ر ى ب [1]

ريبة *riiba* /n/ doubt, suspicion.

مريب *muriib* /adj */ suspicious, disquieting.

ارتاب *ʔirtaab* /vi/ to become suspicious. *ma ḥadd[i]-ʃ bi-yirtaab fi-kalaam-ak* nobody suspects your word. - vn *ʔirtiyaab*; ava *mirtaab*.

ر ى ب [2] see ر و ب [1] : *raayib*

ر ى ت

ريت *reet: ya reet* /also w pron suff/ would that ...! I wish that ...! *ya reet b-aʃul-hum* I wish I could get my hands on them! *ya ret-ni kunt[i] muhandis* I wish I were an engineer! *ya reet illi gara ma-kaan* I wish what has happened had never taken place! *kilmit ya reet ʕumr-a-ha ma tʕammar [prov]* ≈ building castles in the air gets you nowhere.

ر ى ج

ريجة *riiga* <It *riga*> /n pl *-aat*/ line, groove.

ر ي ح see ر و ح: *riiḥ, riiḥa, riḥaan, ʕaryaḥ, rayyaaḥ, maryuuḥ, muriiḥ, rayyaḥ, mirayyaḥ, ʕitrayyaḥ, ʕirtiyaaḥ, ʕistarayyaḥ, mistarayyaḥ*

ر ي د

راد *raad (i)* /vt/ to want, will. *ʕilli yriid-u llaah huwwa lli ykuun* what God wills is. *ʕilli yriid-ak riid-u wi-lli ṭalab buɛaad-ak ziid-u [prov]* seek those who seek you and those who seek to avoid you avoid with yet greater fervour. - vn *rayadaan*; ava *raayid*.

أراد *ʕaraad↑* = *raad*. - vn *ʕiraada, ʕaraada↓*; ava *muriid*; pva *muraad*.

إرادة *ʕiraada, ʕaraada↓* /n/ will, willpower. *ma-luu-ʃ ʕiraada* he has no willpower. *ʕiraadit illaah* the will of God. *bi-ʕiraadit il-mariiḍ* at the patient's request.

إرادى *ʕiraadi* /adj/ pertaining to the will. *maghuud ʕiraadi* an effort of will. *ɛamal laa ʕiraadi* involuntary action.

مريد *muriid* /n */ Sufi novice.

مراد *muraad* /n/ wish, desire. *ʕeeh muraad-ak* what do you want? *muraad-i ʕazuur il-ḥabiib* it's my wish to visit (the tomb of) the Prophet.

ر ي س see ر ء س: *rayyis, rayyisa, riyaasa, ʕitrayyis*

[1] ر ي ش

ريش *riiʃ* /coll n/ feather(s). ‖*fúrfa riiʃ* a feather duster. *ʕilli yiigi fir-riiʃ baqʃiiʃ [prov]* (that which comes against the feathers is a tip) it is a blessing when damage is sustained only by what is non-essential and not by what is essential. - *riiʃ ʕabu l-ḥuṣeen* wild barley. - *humma natfiin riʃ-na* they are the cause of our poverty.

ريشة *riiʃa* /n/ **1** /unit n, pl *-aat*/ a feather. ‖*ɛala raas-u riiʃa [sarc]* superior person, big shot, as in *taaxud il-ʕawwil leeh huwwa-nta ɛala raas-ak riiʃa* who do you think you are that you should be the first to take! — /pl *riyaʃ*/ **2** feather duster. **3** quill pen, dip pen. **4** blade (of a fan or propeller). **5** chop, cutlet. **6** plectrum. **7** lancet. **8** reed of a wind instrument. **9** *[agric]* side of a furrow (see Pl.E, 21).

ريّش *rayyiʃ* /vi/ **1** to put out feathers, grow feathers. **2** to acquire money or material possessions. — /vt/ **3** to dust (s.th.) with a feather duster. - vn *taryiiʃ*; ava/pva *mirayyiʃ*.

اتريّش *ʕitrayyiʃ* /vi/ to become wealthy, be endowed with money or material possessions. - ava *mitrayyiʃ*.

[2] ر ي ش see ر ا ى ش: *raayiʃ*

ر ي ض see [1] ر و ض: *riyaaḍa, riyaaḍi, rayyaḍ, ʕitrayyaḍ*

ر ي ع

ريع *reeɛ* /n/ *[finan]* yield, revenue, interest.

ر ي ف

الريف *ʕir-riif* /used interchangeably w pl form *ʕil-ʕaryaaf*/ country (as opposed to town), countryside. *min ʕaryaaf damanhuur* from the countryside round Damanhour. *ʕil-ḥikaaya di ktiira fir-riif* this happens a lot in the countryside.

ريفى *riifi* /adj/ rural.

[1] ر ي ق

ريق *riiq* /n/ saliva. *riiq-u giri ɛalee* his mouth watered for it. ‖*ɛala r-riiq* (or, less commonly, *ɛala riiq*) or *ɛala riiq in-noom* on an empty stomach, before breakfasting, as in *taalit yoom taaxud farba ɛala r-riiq* on the third day you should take a purgative on an empty stomach, *bi-ydaxxin ɛala riiq in-noom* he smokes before breakfast. - *ʁayyar ir-riiq* to eat the first meal of the day. - *fakk[i] riiq-(u)* to have something to eat (after spending a considerable time without food). - *riiq-(u) niʃif* ((his) spittle dried) (1) (he) felt thirsty. (2) (he) went to great trouble, (he) worked very hard. (3) (he) became exasperated. - *ball ir-riiq* (1) to take the edge off one's thirst. (2) to be helpful or kind to, offer help to, as in *ɛumr-u ma ball[i] riiq ḥadd* he is never helpful to anyone. - *balaɛ ir-riiq* to breathe a sigh of relief. - *riiq ḥilw* gentle talk, as in *ɛumr-u gooz-i ma-warraa-ni f-yoom riiq ḥilw* my husband has never spoken to me kindly in his life. - *dawwaq(-u) r-riiq il-murr* to give (s.o.) a hard time.

[2] ر ي ق see ر و ق: *raayiq*

[1] ر ي ل

ريالة *riyaala* /n/ dribble. ‖*ṭuul ɛumr-ak bi-ryaala* you've been an idiot all your life.

مريلة *maryala* /n pl *maraayil*/ **1** bib. **2** apron. **3** smock, *maryalit il-madrasa* school uniform smock. **4** pinafore.

ريّل *rayyil* /vi/ to dribble, drool. - vn *taryiil*; ava *mirayyil*.

¶ *rayyil ɛala [abus]* ≈ set one's eye on. *mirayyil ɛaʃ-ʃaqqa* he's dead set on the flat.

[2] ر ي ل see ر ى ا ل: *riyaal*

[1] ر ي م

ريم *riim* /n/ scum, foam. ‖*riim il-baḥr* aquatic plants.

ريّم *rayyim* /vi/ **1** to foam, form scum. **2** to practise deceit. *rayyim ɛalayya* he swindled me, he bluffed me. - vn *taryiim*; ava *mirayyim*.

ر ى م [2]
ريمة *riima* invented given name used in proverbs (in combination with the equivalent male given name *miʃkaaḥ*) to signify a good-for-nothing woman. *gawwizu miʃkaaḥ li-riima - ʔaal ma ʕala l-itneen ʔiima [prov]* they married Mishkah to Rima; it was said, 'Both are useless' (of the association of two good-for-nothings). *rigʕit riima l-ʕadit-ha l-ʔadiima* (Rima returned to her old ways) ≈ old habits die hard.

(ر ي و ن)
ريون *riyoon*[1] <Fr *rayon*> /n pl *-aat*/ department (of shop).
ريون *riyoon*[2] <perh Fr *rayonne*> /n pl *-aat*/ rayon.

ر ى ى see [1] ر و ى : *rayy, rayya, rayyaan*

ز

ز ا
ذلك *zaalik* /dem pron/ that.- *maʕa zaalik* despite that. *li-zaalik* or *bi-zaalik* therefore. *ka-zaalik* thus, similarly, likewise. *wa-hwa ka-zaalik* so be it. *wa-ka-zaalik* and so on. ‖*mif min ʕahl*^{i} *zaalik*. - *laa da zaalik nafs-u [joc]* 'He's not that type.' 'On the contrary; he's the epitome of that type!'

ز ا ت see also **ت ز و**
ذات، زات *zaat* /fem n/ **1** self, person, identity. *ma-yḥibb*^{i}*-ʃ ʕilla zaat-u* he does not love (anyone) but himself. *ʕiz-zaat il-malakiyya* the royal person. *ʕiz-zaat il-ʕilahiyya* the Divine Being. *ḥubb iz-zaat* self-love, selfishness. ‖*fi-yoom min zaat il-ʕayyaam* one day, on one of those days, once upon a time. **2** /w suff or in constr/ itself, (him-, her-etc.) self. *ʕil-mudiir zaat-u* the director himself. *min zaat (nafs) if-firka* from the company itself. *ʕabuu-k zaat nafs-u huwwa lli ʠal-ha* it is your father himself who said it. - *bi-zaat-(u)* (him)self, (her)self etc., in person, as in *huwwa b-zaat-u ga* he came in person, *ʕana b-zaat-i ḫ-aʠul-lu* I shall tell him myself.
¶ *biz-zaat* especially, in particular. *ʕil-ʕixṭaar da biz-zaat* this notification in particular.
ذاتي، زاتي *zaati* /adj/ **1a** personal, relating to the person. *taftiiʃ zaati* body search. **1b** individual, relating to the individual. *maghudaat zatiyya* individual efforts. **2** innate, inherent, self-. *ʕil-iktifaaʕ iz-zaati* self-sufficiency. *ʕil-ḫukm iz-zaati* self-rule, autonomy.
¶ *zaatiyyan* /adv/ personally. *ʕaʕraf-u zaatiyyan* I know him personally.
ذوات *zawaat* /pl n/ aristocracy, upper classes.
ذواتي *zawaati* /adj invar/ aristocratic. *ḫayy*^{i} *zawaati* an aristocratic quarter. *ʕaxlaʠ-ha zawaati* she has very refined ways.

ز ا ج
زاج *zaag* <P *zâg*> /n/ vitriol.

ز ا ر
زار *zaar*^{1} /n pl *-aat*/ ritual of sacrifices, incantations, drumming and dancing performed for the purpose of appeasing any one of a number of spirits by which a person may be believed to be possessed.

ز ا ل
ذال *zaal* /fem n, pl *-aat*/ eleventh letter of the Arabic alphabet.

ز ا ل ك see **ز ا**: *zaalik*

ز ا ن
زان *zaan*^{1} /n/ **1** beech. **2** beechwood.
زانة *zaana* /n pl *-aat*/ **1** long pole. *liʕb iz-zaana* or *ʕil-wasb*^{i} *biz-zaana [athl]* pole-vaulting. **2** fixed iron frame for hanging suits and dresses. **3** piece of pitch-pine between the beam of a shadoof and the pail. **4** wooden pick used by an upholsterer.

ز ا ي
زاي *zaay* /fem n, pl *-aat*/ eleventh letter of the Arabic alphabet. - also *zeh, zeen*.

ز ء ب ق see **ز ي ب ق**

ز ء ر
زأر *zaʕar (a)* /vi/ to roar (of, e.g., a lion). - vn *zaʕiir*; ava *zaaʕir*.

ز ء م
زؤام *zuʕaam*$^{\uparrow}$: *ʕil-moot iz-zuʕaam* violent death.

ز ء ن
زؤان *zuʕaan* /n/ *[bot]* darnel.

ز ب ا ط
زباطة *zubaaṭa* <perh Copt> /n pl *-aat, zabaayiṭ*/ cluster, bunch (of dates or bananas). - also *subaaṭa*.

[1] ز ب ب
زبيب *zibiib* /n/ **1** /coll/ raisin(s). ‖*ḍarb il-ḥabiib zayy[i] ʕakl iz-zibiib [prov]* (a beating from one's beloved is like eating raisins) anything received from one's beloved is sweet. **2** spirit distilled from raisins.
زبيبة *zibiiba* /n pl *-aat*/ **1** /unit n/ a raisin. *ʕilli yaakul ʠadd iz-zibiiba la ygii-lu ɛaya wala mṣiiba [prov]* (who eats as little as a raisin gets neither sickness nor catastrophe) eat little, live long. *sooda zayy iz-zibiiba* as black as a raisin (of a dark-skinned woman). **2** dark mark produced on the forehead as a result of repeatedly touching the ground in (Muslim ritual) prayer.

[2] ز ب ب
زبّ *zibb* /n pl *ʕazbaab, zibaab, zubuub*/ *[coarse]* penis, cock. ‖*zibb il-ʕarḍ* (1) *[bot]* conicum. (2) *[deris]* a short man.

[3] ز ب ب see [4] د ب ب : *zubaaba*

ز ب ح see [1] د ب ح : *zabḥa, zabiiḥa, mazbaḥ, mazbaḥa*

ز ب د
زبدة *zibda* /n/ **1** butter. ‖*bint[i] zibda* a smashing girl. - *waraq zibda* greaseproof paper. - *zibdit kakaaw* lip salve. ‖*gat-lu zibda ɛala ftiira* ≈ he had it made, things went entirely his way. **2** variety of mango.
زبديّة *zibdiyya* /n/ **1** /pl *-aat*/ crock (for butter, yoghurt etc. **2** /no pl/ variety of mango.
زبد *zubad* /pl n/ gist, most important part. *ʠal-li ɛala zubad il-ḥikaaya* he gave me the gist of the story.
زبدة *zabada* /n/ civet.
زباد *zabaad* /n/ civet. *ʠuṭṭ[i] zabaad* civet cat.
زبادى *zabaadi* (also *laban zabaadi*) /n/ yoghurt.
زبديك *zibdiik* /n/ lactic acid.
زبّد *zabbid* **1** /vt/ to churn (milk), cause (milk) to form butter. *ʕil-xaḍḍ[i] zabbid il-laban* churning made the milk produce butter. **2** /vi/ to yield butter, be changed into butter. *ʕil-laban yizabbid bil-xaḍḍ il-mustamirr* milk yields butter after continuous shaking. - vn *tazbiid*; ava/pva *mizabbid*.

اتزبّد *ʕitzabbid* or *ʕizzabbid* /vi/ to be turned into butter. - iva *mitzabbid*.

ز ب د ي ك see ز ب د : *zibdiik*

ز ب ر
زبر *zubr* /n pl *ʕazbaar, zibaar*/ *[coarse]* penis, cock.

ز ب ر ج د
زبرجد *zabargad* /n/ **1** chrysolite, peridot. **2** aquamarine. **3** topaz.

ز ب ر ق
زبرق *zabraq* /vt/ *[slang]* to adorn, ornament. *zabraqu l-ɛaruusa ɛaʃaan yoom faraḥ-ha* they've dressed the bride up for her wedding-day. - vn *zabraqa*; ava/pva *mizabraq*.
اتزبرق *ʕitzabraq* or *ʕizzabraq* /vi/ *[slang]* to adorn oneself, dress oneself up, be adorned, be dressed up. - vn *tizabriiq*; ava/iva *mitzabraq*.

ز ب ز ب
ذبذبة *zabzaba* /n pl *-aat*/ **1** *[elec]* oscillation, vibration. **2** (radio) frequency. *zabzaba ɛalya* high frequency.
مذبذب *muzabzab* /adj */ **1** wavering, vacillating, undecided. **2** hypocritical.
اتذبذب *ʕitzabzib* or *ʕizzabzib* /vi/ to oscillate, vibrate. - vn *tazabzub*; ava *mitzabzib*.

[1] ز ب ط
زبط *zabaṭ[1]* /n/ mud, mire.
زبّط *zabbaṭ[1]* **1** /vt/ to cover with mud or dirt. — /vi/ **2** to be covered with mud or dirt. **3** to become constricted, become entangled, become clogged. *ʕil-xinaaqa zabbaṭit* the quarrel became hopelessly involved. *baṭn-u zabbaṭit* his stomach became bloated. - vn *tazbiiṭ*; ava/pva *mizabbaṭ*.
اتزبّط *ʕitzabbaṭ[1]* or *ʕizzabbaṭ[1]* /vi/ to be covered with mud or dirt. - iva *mitzabbaṭ*.

[2] ز ب ط see ظ ب ط : *zabaṭ[2], zabṭ, zaabiṭ, mazbuuṭ, ʕitzabaṭ, zabbaṭ[2], ʕitzabbaṭ[2]*

[3] ز ب ط see ز ب ا ط : *zubaaṭa*

ز ب ع
زوبعة *zawbaɛa*ˀ **1** /n pl *zawaabiɛ*/ large whirlwind, tornado. ‖*zawbaɛa f-fingaan [prov]* a storm in a teacup. - *ʕilli tgiib-u r-riyaaḥ taxd-u z-zawaabiɛ [prov]* ≈ easy

come, easy go. **2** /prop n/ *[astrol]* demon associated with Friday.

ز ب ق

زبق *zabaq (i)* /vi/ to dart (in or out), slip (away), flee. - also *zaraq*. - ava *zaabiq*.

ز ب ل

زبل *zabal (i)* /vt/ *[slang]* to avoid like dirt, treat with contemptuous indifference. - vn *zabl, zabla*; ava *zaabil*; pva *mazbuul*.

زبل *zibl* /coll n/ dropping(s) (of birds, goats, sheep, rabbits, mice etc.).

زبلة *zibla* /unit n, pl *-aat*/ dropping, piece of dung. ‖*zibla wi-yqaawiḥ it-tayyaar* ≈ he's a nobody and he's out to change the world.

زبالة *zibaala* /n/ garbage, rubbish, trash. *ṣafiiḥit zibaala* rubbish bin. *zibaalit il-quṭn* cotton waste.

زبّال *zabbaal* /n */ garbage collector. ‖*zabbaal wi-f-ʕiid-u warda [prov]* a garbage man with a flower in his hand (applied to an incongruous combination).

مزبلة *mazbala* /n pl *mazaabil*/ rubbish dump, trash dump.

اتزبل *ʕitzabal* or *ʕizzabal* /vi/ to be neglected, be avoided like dirt. *min suluuk-u tzabal minnina kull[i]-na* because of his (bad) behaviour, he's been treated with contempt by us all. - iva *mitzibil, mitzabal*.

زبّل *zabbil* **1** /vt/ to treat (e.g., leather) with droppings. **2** /vi/ to drop excrement, excrete droppings (of birds, sheep, goats, rabbits etc.). - vn *tazbiil*; ava *mizabbil*.

ز ب ل ح

زبلحة *zablaḥa* /n/ *[joc slang]* ill-manners, insolence, rudeness.

مزبلح *muzablaḥ* /adj */ *[joc slang]* ill-mannered, insolent, rude.

اتزبلح *ʕitzablaḥ* or *ʕizzablaḥ* /vi/ *[joc slang]* to be insolent, abusive or rude. *dayman yitzablaḥ ʕala graan-u* he always abuses his neighbours. - ava *mitzablaḥ*.

متزبلح *mutazbliḥ* /adj */ *[joc slang]* insolent, rude, impudent.

ز ب ن [1]

زبان *zabaan* /n/ sting (of a bee, scorpion etc.). ‖*ʕid-dinya waqfa ʕala zaban-ha* ≈ everyone is hopping with excited anticipation. - *bi-yduur ʕala zabaan-u* he's just bumming around.

زبانة *zabaana* /n pl *-aat*/ sprout (of a germinating seed).

زبّن *zabbin* /vi/ to germinate, start growth. *ʕil-ḥilba zabbinit* the fenugreek seeds have germinated. - vn *tazbiin*; ava/pva *mizabbin*.

ز ب ن [2]

زبانية *zabanya, zabaaniya*↑ /pl n/ **1** *[Isl]* *zabanyit gahannam* Angels of Hell. **2** henchmen. *gaab zabanyit-u mʕaa* he brought his henchmen with him.

ز ب ن [3] see ز ب و ن: *zibuun, zubuun, zabuun*

ز ب و ن

زبون *zibuun, zubuun, zabuun*↓ <P *zubûn*> /n pl *zabaayin*/ **1** (male) customer, client. **2** *[slang]* contemptuous form of reference to a third party. *ʕiz-zibuun mif ʕagb-u k-kalaam da* the creep doesn't go along with that!

ز ت و ن see ز ى ت: *zatuun, ʕiz-zatuun, zatuuna, zatuunaaya, zatuuni*

ز ج ج [1]

زجاج *zugaag*↑ /n/ **1** glass. ‖*ʕalyaaf zugaag* fibreglass. **2** glaze.

زجاجى *zugaagi*↑ /adj/ of or pertaining to glass.

زجّج *zaggig*↑ [1] /vt/ to glaze. - vn *tazgiig*; ava/pva *mizaggig*.

تزجيجات *tazgigaat* /pl n/ glazes.

اتزجّج *ʕitzaggig*↑ [1] or *ʕizzaggig*↑ [1] /vi/ to be glazed. - iva *mitzaggig*.

ز ج ج [2]

زجّج *zaggig*[2] /vt/ to pencil (the eyebrows). - vn *tazgiig*; ava/pva *mizaggig*.

اتزجّج *ʕitzaggig*[2] or *ʕizzaggig*[2] /vi/ to be pencilled (of eyebrows). - iva *mitzaggig*.

ز ج ر

زجر *zagar*↑ *(u)* /vt/ to shout at, rebuke loudly. - vn *zagr*; ava *zaagir*; pva *mazguur*.

اتزجر *ʕitzagar* or *ʕizzagar* /vi/ to be restrained, be held back. - iva *mitzigir*.

انزجر *ʕinzagar* = *ʕitzagar*. - iva *minzigir*.

ز ج ز ا ج

زجزاج *zigzaag* <prob Fr> **1** /adj invar/ zigzag. *ʕis-sikka zigzaag* the way is zigzag. - /adverbially/ *maaʃi zigzaag* going zigzag. **2** /n/ ricrac braid.

ز ج ز ج

زجزج *zagzig* /vi/ to gain weight, fatten up (especially of animals). *ʕil-mawaaʃi bi-tzagzig ʕal-ʕalaf il-gayyid* cattle gain weight (if fed) on good fodder. - vn *zagzaga*; ava *mizagzig*.

ز ج ل [1]

زجل *zagal* /n pl *ʕazgaal*/ light or popular poem in strophic form (often satirical).

زجلي *zagali* /adj/ pertaining to the *zagal*. *ʃuʿniyya zagaliyya* popular strophic poem set to music.

زجّال *zaggaal* /n */ writer of *zagal*.

مزجول *mazguul* /adj/ produced in *zagal* form.

ز ج ل [2]

زاجل *zaagil*: *ħamaam zaagil* carrier-pigeons.

ز ح ز ح

زحزح *zaħzaħ* /vt/ to move, shift (s.th. heavy). - vn *zaħzaħa*; ava/pva *mizaħzaħ*.

اتزحزح *ʃitzaħzaħ* or *ʃizzaħzaħ* /vi/ to move or be moved (of s.th. heavy). - ava/iva *mitzaħzaħ*.

ز ح ف [1]

زحف *zaħaf[1] (a)* (also *saħaf*) /vi/ **1** to crawl, creep. **2** *[text]* to run, spread (of colours). **3** *[mil]* to advance, march forward. - vn *zaħf*; ava *zaaħif*.

زواحف *zawaaħif* /pl n/ reptiles.

زحّافة *zaħħaafa* /n pl *-aat*/ **1** *[agric]* leveller, drag. **2** *[slang]* pair of rubber slippers.

زحّف *zaħħaf* /vt/ **1** to cause to creep or crawl. **2** *[text]* to cause (colours) to run. **3** *[agric]* to smooth, level (with a drag). - vn *tazħiif*; ava *mizaħħaf*.

اتزحّف *ʃitzaħħaf* or *ʃizzaħħaf* /vi/ passive of *zaħħaf*. - iva *mitzaħħaf*.

ز ح ف [2]

زحف *zaħaf[2]* /n/ palm leaves. - also *zaʕaf, saʕaf*.

ز ح ل

زحل *zuħal* /prop n/ Saturn. ‖*ħaẓẓ-u zuħal* his luck is bad. - *nahaar-u zuħal* he's having an unlucky day.

ز ح ل ف

زحلفة *ziħlifa, zuħlifa* /n pl *-aat, zaħaalif*/ tortoise. - also *zilħifa, zulħifa, siħlifa, silħifa, suħlifa, sulħifa*.

ز ح ل ق

زحلق *zaħlaq* /vt/ **1** to cause to slip or skid. *ʃif-fawaariʕ il-mabluula bi-tzaħlaq il-ʕarabiyyaat* wet roads make cars skid. **2** *[slang]* to ease aside. *ʃinta ʕaayiz tizaħlaq-ni zayy[i] ʕawayd-ak* do you want to ease me away as you usually do? *mizaħlaq iṭ-ṭaqiyya ʃaaxir ʃiyaaka* he is wearing his cap at a very jaunty angle. - vn *zaħlaqa*; ava/pva *mizaħlaq*.

مزحلق *mizaħlaq* /adj */ slippery.

زحليقة *zuħleeqa* /n pl *-aat, zaħaliiq*/ **1** slide, chute. **2** mire.

اتزحلق *ʃitzaħlaq* or *ʃizzaħlaq* /vi/ **1** to slip, skid. *ʃitzaħlaqt[i] fil-banyu ṣ-ṣubħ* I slipped in the bath tub this morning. **2** to ski. - ava *mitzaħlaq*.

تزحلق *tazaħluq* /n/ skiing.

ز ح م

زحم *zaħam (i)* /vt/ **1** to crowd, pack, fill up. *ma-tizħimuu-f il-ʃooḍa min faḍl-u-kum* don't crowd the room, please. ‖*leeh tizħim nafs-ak bif-fakl-i-da* why do you get yourself so busy like that? - *ʃiz-zaħma ʕand in-nabi[↓] [joc]* crowding (should only occur) at the (tomb of the) Prophet ≈ don't push and shove! **2** to cause to rush, hustle. *maa lak mazħuum kida leeh* why are you in such a hurry? ‖*baṭn-u zaħmaa* he has diarrhoea. - vn *zaħamaan, zaħma*; ava *zaaħim*; pva *mazħuum*.

زحمة *zaħma* /n/ crowd. *ʕaayiz ʃalħaq if-fuvl[i] ʕabl[i] zaħmit il-muwaṣlaat* I want to get to work before the rush-hour crowds. - /adjectivally/ *ʃil-bank[i] zaħma ʕawi* the bank is very crowded.

أزحم *ʔazħam* /el/ more/most crowded.

زحام *ziħaam* = *zaħma*.

اتزحم *ʃitzaħam* or *ʃizzaħam* /vi/ to become crowded. *ʃil-ʃooḍa tzaħamit* the room grew crowded. - ava *mitziħim*.

انزحم *ʃinzaħam* = *ʃitzaħam*. - ava *minziħim*.

زاحم *zaaħim* /vi/ to jostle, elbow one's way. *ʃin-naas illi bi-tzaaħim fig-gamʕiyya* the people who jostle in the co-op. - vn *mizaħma*; ava *mizaaħim*.

مزاحم *muzaaħim↑* /n */ rival.

اتزاحم *ʃitzaaħim* or *ʃizzaaħim* /vi/ **1** to jostle one another, elbow one another. ‖*tazaaħum il-ʃafkaar* the crowding of thoughts (in the mind). **2** = *zaaħim*. - vn *tazaaħum↑*; ava *mitzaaħim*.

ازدحم *ʃizdaħam* = *ʃitzaħam*. - vn *ʃizdiħaam*; ava *muzdaħim*.

استزحم *ʃistazħam* /vt/ **1** to consider crowded. **2** to select for being crowded. - ava *mistazħam*.

ز ح و ل

زحول *zaħwil* /vt/ to ease off, deflect, dodge. *ʃahamm[a] ħaaga ʕand il-muwaẓẓaf ʃinnu yzaħwil-ak min ʕalee* the most important thing in the civil servant's mind is to get rid of you. - vn *zaħwala*; ava/pva *mizaħwil*.

اتزحول *ʃitzaħwil* or *ʃizzaħwil* /vi/ to be given the brush-off. - iva *mitzaħwil*.

زخ خ
زخ *zaxx (u)* /vi/ **1** to rain heavily, pour. *ʃid-dinya bi-tzuxx* it is raining hard. - also *saxx*. **2** to urinate. - also *ʃaxx*. - vn *zaxx, zaxaxaan*; ava *zaaxix*.
زخّة *zaxxa* /inst n, pl *-aat*/ **1** a shower of rain. **2** a urinating.

زخ ر see د خ ر: *zaxra, zaxiira*

زخ ر ف
زخرف *zaxraf* /vt/ to decorate, adorn. - vn *zaxrafa*; ava/pva *mizaxraf*.
زخرفة *zaxrafa* /n pl *-aat, zaxaarif*/ decoration. ‖ *zaxaarif id-dunya* pleasures and vanities of the world. *zaxaarif if-fiṭaan* temptations of the devil.
زخرف *zuxruf↑* /n pl *zaxaarif*/ luxury, indulgence, wordly pleasure. *zuxruf il-ḥayaah* the material pleasures of life.
زخرفي *zaxrafi, zuxrufi↑* /adj/ ornamental. *ʃaʃkaal zaxrafiyya* ornamental patterns.
اتزخرف *ʃitzaxraf* or *ʃizzaxraf* /vi/ **1** to be decorated, be adorned. **2** to adorn oneself. - vn *tizaxriif*; ava/pva *mitzaxraf*.

زخ م [1]
زخم *zaxam (u)* /vt/ **1** to lash, whip. *ʃil-ɣarbagi zaxam il-ḥumaar gaamid* the cart-driver lashed the donkey hard. **2** *[mus]* to pluck (lute strings) with a plectrum. - vn *zaxm*; ava *zaaxim*; pva *mazxuum*.
زخمة *zuxma* /n pl *zuxam*/ **1** leather strap for lashing, tawse. **2** stirrup leather.
اتزخم *ʃitzaxam* or *ʃizzaxam* /vi/ **1** to be lashed, be whipped. **2** *[mus]* to be plucked with a plectrum. - iva *mitzixim*.

زخ م [2]
زخم *zixim* /adj */ **1** rancid or putrid in smell, stinking. *ʃid-dihn il-mixazzin min mudda riḥt-u b-tibqa zixma* fat stored for a long time gives off a rancid smell. **2** unbearable (of people). *qadd[i] ʃeeh ir-raagil da zixim* how repellent that man is!
زخمة *zaxama* /n/ stench, stink. *ʃil-laḥma di fiiha zaxama* this meat stinks. ‖ *ʃir-raagil da ɣalee zaxama* ≈ this man is unbearable. - also *zahama*.
زخامة *zaxaama* = *zaxama*. - also *zahaama*.

ز ر ب [1]
زربيّة *zarbiyya* /n pl *-aat, zaraabi*/ hedge, fence, enclosure.
زريبة *zirtiba* /n pl *zaraayib*/ **1** pen, byre (for livestock). *xud min iz-zaraayib wala taxud-ʃ[i] min il-ɣaraayib [prov]* better to marry from the animal pen than from among your relatives. — *ʃiz-zaraayib* /pl n/ **2** locality inhabited by garbage collectors and their families, so called after the sties of the pigs which they raise.
زرب *zarrab* /vi/ to make a hedge or fence, build a stick or bamboo enclosure. - vn *tazriib*; ava *mizarrab*.
اتزرّب *ʃitzarrab* or *ʃizzarrab* /vi/ to be erected or built (of an enclosure). - iva *mitzarrab*.

ز ر ب [2]
مزراب *muzraab, mizraab↑* /n pl *mazariib*/ spout for draining water from roofs and balconies.

ز ر ب ن
زربن *zarbin* **1** /vt/ to get (s.o.) into a temper. **2** /vi/ to get into a temper. - vn *zarbana*; ava/pva *mizarbin*.
زربون *zarbuun* /adj pl *zarabiin*/ **1** excitable, easily infuriated. **2** epithet for a slave.
زربونة *zarbuuna* /n pl *zarabiin*/ fury. *ṭallaɣ zarabiin-u ɣalayya* he really let fly at me.
اتزربن *ʃitzarbin* or *ʃizzarbin* /vi/ to become furious. - vn *tizarbiin*; ava *mitzarbin*.

ز ر ب ف ح
زربيح *zurbeeḥ* /n/ *[bot]* wormseed, Mexican tea (Ambrosinia ambrosioides).

زرج see ز ر ر ي ج: *zurreega*

ز ر ج ن
زرجن *zargin* /vi/ **1** to become stuck, jam. *ʃid-diriksiyoon bi-yzargin lamma f-faḥm[i] yixlaṣ* the steering-wheel jams when the lubricant runs out. **2** to become grumpy. - vn *zargana, tizargiin*; ava *mizargin*.
زرجينة *zargiina* /n pl *zaragiin*/ **1** hand-vice. **2** vice-like implement used for holding hot metal.

ز ر د [1]
زرد *zarad (i, u)* /vt/ **1** to yield (juice, essence etc., as by infusion). *ʃik-karkadeeh zarad loon-u l-ʃaḥmar* the hibiscus flowers gave out their red colour (when infused in water). *ʃiz-zabaadi zarad ʃirf-u* the yoghurt turned partly to whey. ‖ *wiff-i zarad ɣaraq* my face oozed sweat. **2** to cause (the face) to flush. *wiff-a-ha mazruud min il-ḥarr* her face is flushed from the heat. *wiff-u mazruud min iz-zaɣal* his face is purple with anger. — /vi/ **3** to infuse till strong. *xalli f-faay yizrid* let the tea boil (or brew) till it gets strong. - vn *zard, zaradaan*; ava *zaarid*; pva *mazruud*.

زرد *zarad¹ (u)* /vt/ to swallow (with difficulty), gulp. *min kubr il-luqma kaan bi-yizrud-ha ʊil-ɛafya* he was eating such big pieces of food that he could hardly gulp them down. - vn *zaradaan, zard*; ava *zaarid*; pva *mazruud*.

زرد *zard* /n/ juice or essence (extracted as by infusion). *zard il-laḥma* the thickened juices and grease of meat.

زردة *zarda* /n/ **1** /pl *-aat*/ instance noun of *zard*. **2** /no pl/ **2a** strong dark tea. **2b** hottest time (of day). *fi-zardit iḍ-ḍuhr* at the peak of the noon heat.

زرديّة *zarradiyya, zaradiyya* /n pl *-aat, zaraadi*/ (pair of) pliers.

اتزرد *ʃitzarad, ʃitzarad¹* or *ʃizzarad, ʃizzarad¹* /vi/ **1** to be extracted (of juice or essence). **2** to become suffused with blood as through choking (of the face). - ava/iva *mitzirid*.

اتزرد *ʃitzarad²* or *ʃizzarad²* /vi/ to be swallowed with difficulty. - iva *mitzirid*.

انزرد *ʃinzarad, ʃinzarad¹* = *ʃitzarad*. - ava/iva *minzirid*.

انزرد *ʃinzarad²* = *ʃitzarad²*. - iva *minzirid*.

زرّد *zarrad, zarrad* /vt/ to choke. - vn *tazriid, tazriid*; ava/pva *mizarrad, mizarrad*.

ازرّد *ʃizradd, ʃizradd* /vi/ to become suffused with blood as through choking (of the face). - ava *mizradd, mizradd*.

ز ر د ²

زرد *zarad²* /coll n/ links (of a fine chain).

زردة *zarada* /unit n, pl *-aat*/ a link (of a fine chain).

ز ر ر ¹

زرّ *zarr (u)* /vt/ to close up (s.th.) tightly (especially with a drawstring). *zarrit ɛenee-ha* she narrowed her eyes. - vn *zarr, zararaan*; ava *zaarir*; pva *mazruur*.

زرّ *zirr* /n pl *zuruur*/ **1** tassel on a tarbush. **2** bud. ‖*zirr¹ ward* /coll/ dried rosebuds. **3** single specimen (of certain elongated fruits and vegetables). *zirr¹ qurunfil* one clove. *zirr¹ baṭaaṭa* one sweet potato. *zirr¹ xyaar* one cucumber.

زرار *zuraar* /n pl *zaraayir, ʃazraar*/ **1** button. **2** push-button.

اتزرّ *ʃitzarr* or *ʃizzarr* /vi/ passive of *zarr*. - iva *mitzarr*.

انزرّ *ʃinzarr* = *ʃitzarr*. - iva *minzarr*.

زرّر *zarrar* /vt/ **1** to button, button up. *ma-tzarrar ij-jakitta baqa* do button up your jacket! **2** *[hort]* to graft (a shoot). - vn *tazriir, tazriir*; ava/pva *mizarrar*.

اتزرّر *ʃitzarrar* or *ʃizzarrar* /vi/ **1** to be buttoned. **2** *[hort]* to be grafted (of a shoot). - iva *mitzarrar*.

ز ر ر ²

ذرّة *zarra* /n pl *-aat*/ **1** particle. **2** atom.

ذرّى *zarri, zurri↓* /adj/ atomic. *qumbila zarriyya* atomic bomb. *ɣubaar zarri* atomic fall-out.

ذرّيّة *zurriyya, durriyya↓* /n pl *-aat, zaraari*/ progeny, offspring. *ʃil-xunfisa txallif miyya wi-tquul ya-qillit id-durriyya [prov]* a beetle gives birth to a hundred and complains of scarcity of children ≈ the unworthy breed too much. ‖*zurriyyit ɛafariit* a naughty child.

ز ر ر ي ج

زرّيجة *zurreega* /n/ *[bot]* bird's-foot trefoil (Lotus arabicus).

ز ر ز ر ¹

زرزر *zarzar* **1** /vt/ to fill to the brim. *ʃiz-zikiiba mzarzara ɛal-ʃaaxir ḥa-tṭarfaq* the sack is stuffed to the utmost - it'll burst. **2** /vi/ to become brim-full, become completely filled. *ɛenee-ha zarzarit bid-dimuuɛ* her eyes filled with tears. - vn *zarzara*; ava/pva *mizarzar*.

زرزورة *zarzuura¹* /n/ quickness of temper. *walad bi-zarzuura* a boy with a bad temper.

اترزر *ʃitzarzar* or *ʃizzarzar* /vi/ **1** to be filled to the limit. **2** to lose one's temper. - vn *tizarziir*; ava/iva *mitzarzar*.

ز ر ز ر ²

زرزور *zarzuur* /n pl *zaraziir*/ starling.

زرزورة *zarzuura²* = *zarzuur*.

زرط see م ز ر ط

ز ر ع

زرع *zaraɛ (a)* /vt/ **1a** to plant, sow. *ʃilli tizraɛ-u tuḥṣud-u [prov]* what you sow, you reap. *zarɛ¹ ʃalɣaam* mine-laying. ‖*zaraɛ-u zarɛ¹ baṣal* he knocked him into the ground head first, he flattened him. *- ḥ-azraɛ nafs-i hina* 'I'll stick around here.' *- ya zarɛ il-badaari [joc]* what a fine specimen! what a fine figure of a man! **1b** to cultivate. **2** *[constr]* to erect (scaffolding). **3** *[text, print]* to apply or fix (powder) through spraying or dusting. **4** to restore the design of (a carpet, by mending it). - vn *zarɛ, ziraaɛa, ziraaɛa*; ava *zaariɛ*; pva *mazruuɛ*.

زرع *zarɛ* /coll n/ crop(s), plant(s), greenery. *zarɛ-u-hum maat* their crops died. *ʃiḥna bi-nḥibb iz-zarɛ¹ fil-beet* we like to have plants around the house.

زرعة *zarɛa* /n pl *-aat*/ **1** /inst n/ a planting. **2** /unit n/ a crop.

زرعى *zarʕi* /adj/ pertaining to plants or crops. *ʃaxḍar zarʕi* bright green.

زراعة *ziraaʕa, ziraaʕa* /n/ **1** /no pl/ agriculture. *waziir iz-ziraaʕa* the Minister for Agriculture. **2** /pl *-aat*/ (area of) cultivation. *beet-u gaar iz-ziraaʕa* his house adjoins the cultivated area.

زراعى *ziraaʕi* /adj */ agricultural. *maḥaṣiil ziraʕiyya* agricultural products. *muhandis ziraaʕi* agronomist. ‖*ṭariiq ziraaʕi* road passing through an agricultural area. - *ʃil-ʃiṣlaaḥ iz-ziraaʕi* agrarian reform.

زارع *zaariʕ*[1] /n pl *zurraaʕ*↑/ farmer, cultivator.

مزروعات *mazruʕaat*↑ /pl n/ crops, plants.

زرّيع *zarriiʕ* /coll n/ **1** seedling(s). **2** shoot(s), sprout(s). **3** young fish.

زرّيعة *zarriiʕa* = *zarriiʕ*. ‖*dool zarriiʕit ʃabalsa* they are mischievous little monsters.

زرّيعة *zurreeʕa* /unit n, pl *-aat, zarariiʕ*/ **1** a seedling. **2** a sprout, a shoot. **3** a young fish.

مزرعة *mazraʕa, mazraʕa*↑ /n pl *mazaariʕ*/ place where a specific crop is cultivated. *mazraʕit naxiil* a palm plantation. ‖*mazraʕit firaax* a chicken farm.

¶ *ʕamal mazraʕa [path]* to make a culture. *ʃibʕat il-balɣam ʕaʃaan yitʕimil-lu mazraʕa* send the sputum to have a culture made.

اتزرع *ʃitzaraʕ* or *ʃizzaraʕ* /vi/ passive of *zaraʕ*. - iva *mitziriʕ*.

انزرع *ʃinzaraʕ* = *ʃitzaraʕ*. - iva *minziriʕ*.

زرّع *zarraʕ* **1** /vi/ to sprout, germinate (usually of plants). ‖*zarraʕ badri* he grew early, he's tall for his age. **2** /vt/ = *zaraʕ* 4. - vn *tazriiʕ*; ava/pva *mizarraʕ*.

زارع *zaariʕ*[2] /vt/ to enter into a sharecropping arrangement with (s.o.). - vn *mizaraʕa*; ava *mizaariʕ*.

مزارع *muzaariʕ* /n */ farmer, cultivator.

ز ر ف

زراف *zaraaf* /coll n/ giraffe(s).

زرافة *zaraafa* /unit n, pl *-aat*/ a giraffe.

ز ر ق [1]

زرق *zaraq (u)* /vi/ **1** to slip, pass. *ʃil-ḥaraami zaraq min il-buliiṣ fiz-zaḥma* in the crowd the thief slipped away from the police. *ʃil-musmaar zaraq fil-xaʃab* the nail went easily into the wood. ‖*naab-u zaariq* (1) he's vicious and cruel. (2) he's wily and untrickable. **2** to give a piercing sidelong glance. *zaraq bi-ʕeen-u liyya* he threw a quick sharp look at me. - vn *zarq, zaraqaan*; ava *zaariq*.

زوارق *zawaariq* /pl n/ innermost windings, labyrinthine core. *tuht*[i] *f-zawaariq il-baṭniyya* I got lost deep in the winding alleys of el-Batniya.

زاروق *zaruuq* /n pl *zawariiq*/ **1** small irrigation channel supplying a paddy. **2** small snake.

زواريق *zawariiq* = *zawaariq*. ‖*daxal fi-zawariiq il-mudiir* he wormed his way into the director's confidence.

مزراق *muzraaq* /n pl *mazariiq*/ javelin.

زرّق *zarraq*[1] /vt/ **1** to slip, pass covertly. *zarraq-li gneeh* he slipped me a pound. **2** intensive of *zaraq* 2. - vn *tazriiq*; ava *mizarraq*.

اتزرّق *ʃitzarraq*[1] or *ʃizzarraq*[1] /vi/ passive of *zarraq*[1] 1. - iva *mitzarraq*.

ز ر ق [2]

أزرق *ʃazraq* /adj, fem *zarqa*, pl *zurq*/ **1** blue. *ʃazraq ṣiini* china blue. *ʃazraq zayy in-niila* as blue as indigo. ‖*mayya zarqa* cataract (of the eye). - *ʕaḍma zarqa* abusive epithet for a Copt. - *naab-u ʃazraq* he is cunning. - *ḫ-aṭallaʕ il-bala l-ʃazraq ʕala gittit-u* ≈ I'll destroy him! - *ʃil-ʕafariit iz-zurq*[i] *b-titnaṭṭaṭ fi-ʕnee* he is furious. - *ʃinta ḫa-tiʃtaval-li fil-ʃazraq* ≈ are you trying to play dirty with me? **2a** grey (of a horse). **2b** dove-grey (of a pigeon).

زرقان *zaraqaan* /n/ blueness.

زراق *zaraaq* = *zaraqaan*.

زروقيّة *zuruqiyya* = *zaraqaan*.

زرّق *zarraq*[2] /vt/ to cause to become blue, make blue. ‖*zarraq-li ʕeen-i* he gave me a black eye. - vn *tazriiq*; ava *mizarraq*.

اتزرّق *ʃitzarraq*[2] or *ʃizzarraq*[2] /vi/ to be made blue. - iva *mitzarraq*.

ازرقّ *ʃizraqq* /vi/ to become blue. *wiff-u zraqq*[i] *w-ʃuxma ʕalee* his face turned blue and he fainted. ‖*ʕeen-u mizriqqa* he has a black eye. - ava *mizriqq*.

استزرق *ʃistazraq* /vt/ to consider blue. - ava *mistazraq*.

ز ر ك ش

زركش *zarkiʃ*↑ <P *zar-kash*> /vt/ to embroider, decorate. - vn *zarkaʃa*; ava/pva *mizarkiʃ*.

اتزركش *ʃitzarkiʃ* or *ʃizzarkiʃ* /vi/ to be embroidered, be brocaded, be decorated. - iva *mitzarkiʃ*.

ز ر ك و ل

زركولة *zirkoola*: *tikk*[i] *zirkoola* see *tikk*[1].

ز ر ن ى خ

زرنيخ *zarniix* <P *zirnîkh*, cf also Syr> /n/ arsenic.

ز ر و ط

زروط *zarwaṭ [slang]* **1** /vt/ to soil, make a mess of. **2** /vi/ to become plentiful. *ʃil-baṭṭiix zarwaṭ* melons have be-

come plentiful. - vn *zarwaṭa*; ava/pva *mizarwaṭ*.
اتزروط *ʔitzarwaṭ* or *ʔizzarwaṭ* /vi/ to be soiled, be messed up. - iva *mitzarwaṭ*.

ز ع ب ب
زعبوبة *zaʕbuuba* /n pl *zaʕabiib*/ dust devil, whirlwind.
زعبب *zaʕbib* /vi/ to become dusty and windy (of the weather). - vn *zaʕbaba*; ava *mizaʕbib*.
مزعبب *mizaʕbib* /adj */ excited and irritable.

ز ع ب ل
زعبل *zaʕbal: ʔabu zaʕbal* /prop n/ town in the Qalyubiya province known for its prison.

ز ع ب و ط
زعبوط *zaʕbuuṭ* /n pl *zaʕabiiṭ*/ long woollen robe often with a hood (worn by peasants).

ز ع ت ر
زعتر *zaʕtar, zaʕtar* /n/ thyme. - also *saʕtar*.

ز ع ج
زعج *zaʕag (i)* =ʔazʕag. - ava *zaaʕig*; pva *mazʕuug*.
انزعج *ʔinzaʕag* /vi/ to be annoyed, be disturbed. - vn *ʔinziʕaag*; iva *munzaʕig* ↑ *minziʕig*.
أزعج *ʔazʕag* ↑/vt/ to annoy, disturb. *ʔin faaʔ allaah ma-nkun-fˈ ʔazʕagnaa-k* I hope we haven't disturbed you. - vn *ʔizʕaag*; ava *muzʕig*.

ز ع ر [1]
زعر *zaʕarˈ (a)* /vt/ to cut off short, dock (clothes or animals' tails). *leeh zaʕarti l-fustaan kida* why have you made the dress so short? - vn *zaʕr*; ava *zaaʕir*; pva *mazʕuur*.
أزعر *ʔazʕarˈ* /adj, fem *zaʕra*, pl *zuʕr*/ docktailed. *kalb[a] ʔazʕar* a dog with a docked tail. *karabiig zuʕr* short whips without lashes. ‖*karabiig-u zuʕr* he is very cruel. - *(kull-u) quṣrˈ deel (ya ʔazʕar) [prov]* ≈ sour grapes!
اتزعر *ʔitzaʕar* or *ʔizzaʕar* /vi/ to be cut off short, be docked. - iva *mitziʕir*.
أزعر *ʔazʕar*[2] /vt/ to shorten too much. *ʔazʕarti ʃaʕr-ik leeh kida* why have you clipped off too much of your hair like this? - vn *ʔazʕara*; ava/pva *miʔazʕar*.
اتأزعر *ʔitʔazʕar* /vi/ to be shortened too much. - iva *mitʔazʕar*.

ز ع ر [2]
ذعر *zaʕar*[2] *(i)* /vt/ to frighten, terrify, alarm. - vn *zuʕr* ↑; ava *zaaʕir*; pva *mazʕuur*.
ذعر *zuʕr* ↑/n/ panic, terror. *gat-lu ḥaalit zuʕr* he panicked.
انذعر *ʔinzaʕar* /vi/ to be frightened, be alarmed, be panic-stricken. - vn *ʔinziʕaar*; ava *minziʕir*.

ز ع ز ع
زعزع *zaʕzaʕ* /vt/ to shake, undermine (confidence etc.). *zaʕzaʕit siqat-i f-nafs-i* it shook my self-confidence. - vn *zaʕzaʕa*; ava/pva *mizaʕzaʕ*.
مزعزع *mizaʕzaʕ* /adj */ long and thin, tall and skinny.
زعزوع *zaʕzuuʕ* /adj/ long and thin, tall and skinny.
زعزوعة *zaʕzuuʕa* /n pl *zaʕaziiʕ*/ top part or spike of a sugar cane. ‖*zayy iz-zaʕzuuʕa* long and thin, tall and skinny.
اتزعزع *ʔitzaʕzaʕ* or *ʔizzaʕzaʕ* /vi/ to be shaken or undermined (of confidence etc.). - vn *tizaʕziiʕ*; iva *mitzaʕzaʕ*.

ز ع ط [1]
زعط *zaʕaṭ (a)* /vt/ to pluck out (hair). *zaʕaṭit ḥawagib-ha bil-mulqaaṭ* she plucked her eyebrows with the tweezers. - vn *zaʕṭ*; ava *zaaʕiṭ*; pva *mazʕuuṭ*.
اتزعط *ʔitzaʕaṭ* or *ʔizzaʕaṭ* /vi/ to be plucked out. - iva *mitziʕiṭ*.
انزعط *ʔinzaʕaṭ* =ʔitzaʕaṭ. - iva *minziʕiṭ*.

ز ع ط [2] see ز ع ى ط : *ziʕeeṭ*

ز ع ع
زعّ *zaʕʕ (i)* /vt/ **1** to treat cruelly, treat harshly. *ruḥt aʕtizir-lu zaʕʕ-i-ni* I tried to apologize but he rejected me roughly. **2** to unsettle, upset (s.o.). - vn *zaʕʕ, zaʕaʕaan*; ava *zaaʕiʕ*; pva *mazʕuuʕ*.
اتزعّ *ʔitzaʕʕ* or *ʔizzaʕʕ* /vi/ **1** to be treated harshly. **2** to be unsettled, be upset. - iva *mitzaʕʕ*.

ز ع ف
زعف *zaʕaf* /coll n/ palm frond(s). *ḥadd iz-zaʕaf [Chr]* Palm Sunday. - also *zaḥaf, saʕaf*.
زعّافة *zaʕʕaafa* /n pl *-aat*/ long-handled ceiling duster (with a head of palm or other fibre).
زعّف *zaʕʕaf* /vi/ to dust a ceiling with a *zaʕʕaafa*. - vn *tazʕiif*; ava *mizaʕʕaf*.
اتزعّف *ʔitzaʕʕaf* or *ʔizzaʕʕaf* /vi/ to be dusted (with a *zaʕʕaafa*). - iva *mitzaʕʕaf*.

(ز ع ف ر)
زعفر *zaʕfar, zaʕfar* /n/ sapphire.
زعفران *zaʕfaraan, zaʕfaraan* /n/ saffron.

ز ع ق

زعق *zaʕaq (a)* /vi/ **1** to call out, shout. *lamma b-tismaʕ bayyaaʕ bi-ynaadi b-tiʒʒaq ʕalee* when she hears a street vendor cry, she calls out to him. *marraat lamma bi-ygii-ni d-door ʔabqa ʔazʕaq ʕala ʃwayyit hawa* sometimes when I have an attack (of asthma) I clamour for a little air. **2** *[slang]* to stink to high heaven. - vn *ziʕiiq, zaʕaqaan*; ava *zaaʕiq*.

زعيق *ziʕiiq* /n/ clamour, shouting. *kaanit iṣ-ṣaala kull-a-ha zʕiiq fi-zʕiiq* the hall was all clamour and shouting.

زاعق *zaaʕiq* /adj/ **1** garish (of colour). **2** tart, sour (in taste). **3** *[slang]* putrid.

زعقة *zaʕqa* /inst n, pl *-aat*/ a shout, a cry.

زعّق *zaʕʕaq* /vi/ **1** to shout, bellow, yell. *huwwa bi-yzaʕʕaq fiyya kida leeh* why does he sound off at me like that? **2** to scold, reprimand. *zaʕʕaqt-i-lha lamma gat waxri* I gave her a dressing-down when she came late. - vn *tazʕiiq*; ava *mizaʕʕaq*.

اتزعّق *ʔitzaʕʕaq* or *ʔizzaʕʕaq* /vi/ (impersonal) passive of *zaʕʕaq*. *miʃ ana lli yitzaʕʕaq-lu* I am not (the sort) to be shouted at like that. - iva *mitzaʕʕaq*.

ز ع ل

زعل *ziʕil (a)* /vi/ **1** to become cross, become irritated. *ʔana zaʕlaan minnu ʕala l-maqlab illi ʕamal-u fiyya* I'm angry with him because of the trick he played on me. **2** to become distressed. *ʔumm-a-ha zaʕlaana ʕala fraq-ha* her mother is upset at being separated from her. - vn *zaʕal*; ava *zaʕlaan*.

زعل *zaʕal* /n/ **1** anger, annoyance. *ma-f-naa-ʃ miz-zaʕal* it is inconceivable that we should get angry with each other. *ʔiʃ-ʃukuk mamnuuʕ wiz-zaʕal marfuuʕ* ≈ no credit sales. **2** distress, sadness. *ḫa-tmuut min iz-zaʕal* she will die of grief.

زعلان *zaʕlaan* /adj */ **1** annoyed, cross, angry. *ʔana zaʕlaan minnak* I am cross with you. **2** distressed, sad. *hiyya zaʕlaana ʕalee* she is sorry for him.

زعول *zaʕuul* /adj invar/ *[rur]* recalcitrant, unruly (of an animal and, jocularly, of a woman).

زعلة *zaʕla* /n/ **1** a fit of anger. ‖ *ʕamal-ha b-zaʕla wala ʕad-ʃ*^{i} *bi-ykallim-ni* he used the incident as a pretext for not speaking to me any more. **2** a distress, a sadness. *ziʕil zaʕla maat fiiha* he died of his grief.

زعّل *zaʕʕal* /vt/ **1** to upset, annoy, anger. *ma-yṣaḫḫ*^{i}*-ʃ ʔinnu yzaʕʕal ʔahl-u* he should not upset his family. **2** to distress, grieve. - vn *tazʕiil*; ava/pva *mizaʕʕal*.

ز ع ل ك see ص ع ل ك : *zaʕluuk*

ز ع م

زعم *zaʕam (u)* /vt/ to claim, allege. *zaʕamit ʔinn il-beet milk-a-ha* she claimed that the house was hers. - vn *zaʕm*; ava *zaaʕim*; pva *mazʕuum*.

زعم *zaʕm*↑ /n/ allegation, claim. *da ṣaḥiiḥ ʕala zaʕm-u-hum* this is true according to their allegation. ‖ *ʕala zaʕm inn* ... on the assumption that, as in *ʔana ṭabaxt il-ʔakl*^{i} *da kull-u ʕala zaʕm inn il-ʕeela gayya* I cooked all this food thinking that the family was coming.

مزاعم *mazaaʕim*↑ /pl n/ assumptions, allegations. *mazaaʕim baṭla* false beliefs.

زعامة *zaʕaama*↑ /n pl *-aat*/ leadership.

زعامات *zaʕamaat* /pl n/ leaders.

زعيم *zaʕiim* /n pl *zuʕama*/ leader.

اتزعّم *ʔitzaʕʕam* or *ʔizzaʕʕam* /vt/ to become the leader of. *ʔitzaʕʕam is-sawra* he became leader of the revolution. - vn *tazaʕʕum*↑; ava *mutazaʕʕim*↑, *mitzaʕʕim, mitzaʕʕam*.

ز ع ن

ذعن *zaʕan*↑ *(i)* /vi/ to submit, give in, yield.

أذعن *ʔazʕan*↑ = *zaʕan*. - vn *ʔizʕaan*; ava *muzʕin*.

إذعان *ʔizʕaan*↑ /n/ submissiveness.

ز ع ن ف

زعنفة *ziʕnifa* /n pl *zaʕaanif*/ **1** fin. **2** (rubber) flipper.

ز ع ن و ن

زعنونة *zaʕnuuna* /n pl *zaʕaniin*/ **1** large decorated pot in which a flower pot is placed, cachepot. **2** goatee beard.

ز ع ى ط

زعيط *ziʕeeṭ: ziʕeeṭ wi-mʕeeṭ wi-naṭṭaaṭ il-ḫeeṭ* every Tom, Dick and Harry.

ز غ ب

زغب *zaɣab* /n/ down, fuzz.

زغبى *zaɣabi* /adj/ downy, fuzzy.

زغّب *zaɣɣab* /vi/ to become downy, become fuzzy. - vn *tazɣiib*; ava *mizaɣɣab*.

ز غ ب ر

زغبار *zuɣbaar* /n/ dust produced in the processing of cotton etc.

ز غ د

زغد *zaɣad (u)* /vt/ to poke, prod, elbow. ‖ *ʔiskut ya mazɣuud* quiet, you devil! - vn *zaɣd*; ava *zaaɣid*; pva *mazɣuud*.

زغدة *zaɣda* /inst n, pl *-aat*/ a poke, a prod, a dig.
زغد *zuɣd* /n pl *ʃizɣaad, ʃazɣaad*/ poke, prod, dig with the elbow or leg.
اتزغد *ʃitzaɣad* or *ʃizzaɣad* /vi/ to be poked, be prodded. - iva *mitziɣid*.
انزغد *ʃinzaɣad* = *ʃitzaɣad*. ‖ *ʃin ʃa-lla tinziɣid fi-ʔalb-ak* ≈ may a calamity befall you!
زغّد *zaɣɣad* /vt/ to prod or poke repeatedly. - vn *taziɣiid*; ava *mizaɣɣad*.

¹ ز غ ر
زغر *zaɣar (u)* /vi/ to glare, glower. *zaɣarit-li zaɣra xallit-ni f-nuṣṣ[i] hduum-i* she gave me a glare which shrivelled me up. - vn *zaɣr*; ava *zaaɣir*.
زغرة *zaɣra* /inst n, pl *-aat*/ a glare, a glowering stare.

² ز غ ر see ص غ ر : *zuɣayyar*

ز غ ر ت
زغرت *zaɣrat* /vi/ to produce the trilling sound known as *zaɣruuta*. - vn *zaɣrata*; ava *mizaɣrat*.
زغروتة *zaɣruuta* /n pl *zaɣariit, zaɣrutaat*/ a high trilling cry, commonly uttered by women on joyous occasions.

ز غ ز غ
زغزغ *zaɣzaɣ* /vt/ to tickle. *bi-tzaɣzaɣ il-ʕayyil li-ḥadd[i] ma ykarkaʕ mid-diḥk* she tickles the baby until he bursts out laughing. - vn *zaɣzaɣa*; ava *mizaɣzaɣ*.
اتزغزغ *ʃitzaɣzaɣ* or *ʃizzaɣzaɣ* /vi/ to be tickled. - vn *tizaɣziiɣ*; iva *mitzaɣzaɣ*.

ز غ ط
زغط *zaɣaṭ (u)* /vt/ to gulp down. - vn *zaɣṭ*; ava *zaaɣiṭ*; pva *mazɣuuṭ*.
زغطة *zuɣuṭṭa* /n/ **1** /no pl/ hiccups, hiccuping. **2** /pl *-aat*/ (one) hiccup.
اتزغط *ʃitzaɣaṭ* or *ʃizzaɣaṭ* /vi/ to be gulped down. - iva *mitziɣiṭ*.
زغّط *zaɣɣaṭ* /vt/ to feed with repeated small quantities. *bi-tzaɣɣaṭ il-baṭṭ[i] ʕalaʃaan yisman* she force-feeds the ducks so that they will fatten up. *zaɣɣaṭnaa-lu l-ʕilm* we spoon-fed him knowledge. - vn *taziiṭ*; ava/pva *mizaɣɣaṭ*.
اتزغّط *ʃitzaɣɣaṭ* or *ʃizzaɣɣaṭ* /vi/ passive of *zaɣɣaṭ*. - iva *mitzaɣɣaṭ*.

¹ ز غ ط ط
زغطط *zaɣṭaṭ* /vi/ to become overjoyed. - also *zaqṭaṭ*. - vn *zaɣṭaṭa*; ava *mizaɣṭaṭ*.

² ز غ ط ط see ص غ ر : *zuɣaṭṭaṭ, zuɣaṭṭuuṭ*

ز غ ل
زغل *zaɣal[1] (i)* **1** /vt/ to cheat, deceive. *zaɣalit-ni b-maẓhar-ha l-xaddaaʕ* she took me in with her deceptive appearance. **2** to poison (food). **3** to dazzle, blur (the vision). — /vi/ **4** to become dazzled or blurred in vision (of the eye). *ʕenay-ya zaɣalit ma-lḥiqt[i]-ʃ ʃaqraa-ha* my eyesight became blurred and I didn't manage to read it. - vn *zaɣl, zaɣalaan*; ava *zaaɣil*; pva *mazɣuul*.
زغل *zaɣal[2]* /n/ deceit, deception.
مزغل *mazɣal* /n pl *mazaaɣil*/ loophole, embrasure.
اتزغل *ʃitzaɣal* or *ʃizzaɣal* /vi/ passive of *zaɣal[1]*. - iva *mitziɣil, mitzaɣal*.
انزغل *ʃinzaɣal* = *ʃitzaɣal*. - iva *minziɣil*.

¹ ز غ ل ل
زغلل *zaɣlil* **1** /vt/ to blur, render dim, dazzle (the eye). *ʃin-nuur zaɣlil ʕenee-na* the light dazzled our eyes. **2** /vi/ to become dim or blurred, be dazzled. *ʕenee zaɣlilit min kutr in-nimar* his vision became blurred from looking at so many numbers. - vn *zaɣlala*; ava/pva *mizaɣlil*.

² ز غ ل ل
زغلول *zaɣluul[1]* /n pl *zaɣaliil*/ **1** young bird, squab. **2** young or immature person. *ʃif-fuɣlaana di ʕayza raagil gaamid wi-da lissa zaɣluul* this job needs a strong man, but this fellow is still wet behind the ears. — *zaɣaliil* /pl n/ **3** *[slang]* lovely young girls, smashing birds.

ز غ ل و ل
زغلول *zaɣluul[2]*: *balaḥ zaɣluul* type of long red date.

ز غ ن ط ط see ص غ ر : *zuɣanṭaṭ, zuɣanṭuuṭ*

ز غ ن ن ن see ص غ ز : *zuɣannan, zuɣannuun*

ز غ و ر
زغور *zaɣwar* /vi/ to make noises, rumble (of the stomach). *baṭn-i b-titnifix wi-bi-tzaɣwar lamma b-aakul ʕads* my stomach swells and rumbles when I eat lentils. - vn *zaɣwara, tizaɣwiir*; ava *mizaɣwar*.

ز غ و ن
زغون *zaɣwin* /vi/ to make noises, rumble (of the stomach). - vn *zaɣwana, tizaɣwiin*; ava *mizaɣwin*.

ز غ ي ي ر see ص غ ر : *zuɣayyar*

¹ ز ف ت
زفت *zift* /n/ pitch, tar. ‖ *zayy iz-zift* awful, lousy. - *raagil*

zift iṭ-ṭiin a bloody bastard. -*nawil-ni zift*^{i} *musmaar* hand me a blasted nail. -/adjectivally/ *ħadd*^{i} *yiqdar yizaakir fil-gaww iz-zift*^{i} *da* can anyone study in this awful weather?

أزفت *ʔazfat* /el/ more/most awful.

زفّت *zaffit* /vt/ **1** to tar, apply tar to. **2** to spoil, ruin, make a mess of. *zaffitit ʕiʃt-i* she made a mess of my life. *zaffit sumʕit-i* he blackened my reputation. — /vi/ **3** to be covered with pitch, become as dirty as pitch. *ʔamiiṣ-i zaffit fig-gaww il-mixabbar* my shirt has become filthy because of the dusty weather. **4** to become spoilt, become bad or worse. *yoom mizaffit* a lousy day. -vn *tazfiit*; ava/pva *mizaffit*.

اتزفّت *ʔitzaffit* or *ʔizzaffit* /vi/ passive of *zaffit*. -iva *mitzaffit*.

ز ف ت [2] see ز ف ى ت : *zifeeta*

ز ف ت ا

زفتى *zifta* /prop n/ Zifta, a *markaz* on the left bank of the Damietta branch of the Nile in Gharbiya province.

زفتاوى *ziftaawi* /adj pl -*yya*/ of or pertaining to Zifta.

ز ف ر [1]

زفر *zifir* /adj */ **1** greasy, filthy. *damm-u zifir* (1) his blood is dirty (a popular explanation of illness). (2) he's a bore, he's a drag. *lisaan-u zifir* he's foul-mouthed, he's given to insult. ‖*yomiyya zifra* single-entry day book. -*ħibr*^{i} *zifir* finger-printing ink, printing ink. -*karbuun zifir* double-sided carbon paper. **2** rank or unpleasant (of smell or taste). ‖*yasmiin zifir* common jasmine.

زفر *zafar* /coll n/ meat or poultry.

زفارة *zafaara* /n/ **1** greasy dirt. ‖*zafaara fid-damm* syphilis (in folk medicine). **2** unpleasantly pungent taste or smell (exuded by fish or poultry).

زفّر *zaffar* /vt/ **1** to soil, dirty. *zaffarit ʔid-ha b-damm-u* she soiled her hand with its blood. **2** *[Chr]* to eat (meat or poultry, thus breaking a fast). — /vi/ **3** to eat meat, fish or poultry. *ʔiħna mzaffariin in-nahar-da* we're having meat (or fish or poultry) today. -vn *tazfiir*; ava/pva *mizaffar*.

اتزفّر *ʔitzaffar* or *ʔizzaffar* /vi/ passive of *zaffar*. -iva *mitzaffar*.

استزفر *ʔistazfar* /vt/ to consider rank or unpleasant-smelling. -ava *mistazfar*.

ز ف ر [2]

زفرة *zafra* /n pl -*aat*/ sigh, moan.

زفير *zafiir* /n/ exhalation, expiration.

ز ف ر [3] see ز ف ى ر : *zifeer, zufeer*

ز ف ف

زفّ *zaff (i)* /vt/ to parade, conduct a ceremonial procession (notably in weddings). *ʔig-giraan kull-a-ha zaffit il-ʕaruusa* all the neighbours led the bride in a procession. *miskuu l-ħaraami w-zaffuu lil-ʔism* they caught the thief and conducted him to the police station. -vn *zafafaan*; ava *zaafif*; pva *mazfuuf*.

زفّة *zaffa* /n pl *zifaf, zaffaat*/ ceremonial procession (notably in weddings). ‖*zaffit ʔamʃiir* the last day of the Coptic month of Tuba. -*huwwa b-yimʃi fiz-zaffa* he goes along with the crowd. -*yiḍrab fi-zaffa wi-yṣaaliħ fi-ʕatfa [prov]* he quarrels in public and makes up in secret.

زفاف *zifaaf, zafaaf* /n/ wedding.

اتزفّ *ʔitzaff* or *ʔizzaff* /vi/ to be paraded, be escorted in procession. -iva *mitzaff*.

انزفّ *ʔinzaff* = *ʔitzaff*. -iva *minzaff*.

ز ف ل ط

زفلط *zaflaṭ* /vt/ **1** to cause to slip. **2** to make slippery. *ʔin-naṭara zaflaṭit if-ʃawaariʕ* the rain made the streets slippery. -vn *zaflaṭa*; ava/pva *mizaflaṭ*.

مزفلط *mizaflaṭ* /adj */ slippery, smooth (in character).

زفلوط *zafluuṭ* **1** /adj */ slippery, smooth (in character). **2** /n pl *zafaliiṭ*/ *[rur]* catfish.

اتزفلط *ʔitzaflaṭ* or *ʔizzaflaṭ* /vi/ to slide, slip. *ga yimsik samaka ʔitzaflaṭit min ʔiid-u* he tried to catch a fish but it slipped through his fingers. -vn *tizafliiṭ*; ava *mitzaflaṭ*.

ز ف ى ت

زفيتا *zifeeta* /n/ *[bot]* yellow oleander (Theretia hereifolia).

ز ف ى ر

زفير *zifeer, zufeer* <Fr *zéphire*> kind of cheap thick cotton cloth from which galabiyas, pyjamas etc. are made.

ز ق د

زقّد *zaqqad* /vt/ to force-feed (a child). -vn *tazqiid*; ava/pva *mizaqqad*.

اتزقّد *ʔitzaqqad* or *ʔizzaqqad* /vi/ to be force-fed. -iva *mitzaqqad*.

ز ق ر

زقر *zaqar (u)* /vt/ to put or push into a corner. *zaqar-u f-rukn il-ħalaqa w-xallaṣ ʕalee* he pushed him into the

corner of the ring and finished him off. - vn *zaqr*; ava *zaaqir*; pva *mazquur*.

زقر *zuqr* /n/ corner (of a room).

اتزقر *ʔitzaqar* or *ʔizzaqar* /vi/ **1** to be put, pressed or pushed into a corner. **2** to get into trouble, be trapped. - ava/iva *mitziqir*.

انزقر *ʔinzaqar* = *ʔitzaqar*. - ava/iva *minziqir*.

ز ق ر د

زقرد *zuqrud*↓ epithet used to impute worthlessness and smallness to one so called. *ya zuqrud* you good-for-nothing pip-squeak! *ʔitlamm*ⁱ *zuqrud ʕala ẓariifa [prov]* Zuqrud joined up with Zarifa (of the association of two good-for-nothings). - also *zaqzuuq*.

مزقرد *mizaqrad*↓ /adj */ bright and energetic, on-the-ball.

ز ق ز ق

زقزق *zaqzaq* /vi/ to chirp, twitter. *ʔil-ʕaṣafiir bi-tzaqzaq min ṣabaḥiyyit rabb-i-na* birds twitter from the early morning. ‖*ʕaṣafiir baṭn-i zaqzaqit* I was ravenous. - *ʔana ʕaql-i zaqzaq-li* ≈ a sudden idea came to my mind. - vn *zaqzaqa, tizaqziiq*; ava *mizaqzaq*.

مزقزق *mizaqzaq* /adj */ out of sorts, off-key. *mazaag-i mzaqzaq* I'm out of humour.

زقزوق *zaqzuuq* **1** /n pl *zaqaziiq*/ type of small Nile fish that makes a twittering sound when pulled out of water. **2** /no pl/: *zaqzuuq wi-ẓariifa* an association of two equally worthless characters. - also *zuqrud*.

زقزوقة *zaqzuuqa* /n pl *zaqaziiq*/ shred of an exploded balloon, blown and popped.

الزقازيق *ʔiz-zaqaziiq* /prop n/ Zagazig, the capital of Sharqiya province.

ز ق ط ط [1]

زقطط *zaqṭaṭ* /vi/ to become elated, thrilled or overjoyed. - also *zaṿṭaṭ*. - vn *zaqṭaṭa*; ava *mizaqṭaṭ*.

ز ق ط ط [2] see ص غ ر : *zuqaṭṭaṭ, zuqaṭṭuuṭ*

ز ق ف

زقف *zaqaf (u)* /vt/ **1** to throw (a stone, a ball etc.). *ʔizquf ik-koora w-ʔana ʔalquf-ha* throw the ball at me and I'll catch it. **2** to pelt. *zaqafuu-ni b-ṭuub* they threw stones at me. - also *faqaf*. - vn *zaqf, zaqafaan*; ava *zaaqif*; pva *mazquuf*.

ز ق ق [1]

زق *zaqq (u)* /vt/ **1** to push. *zuqq il-baab lin-naḥya t-tanya* push the door the other way. ‖*ma-tzuqq*ⁱ*-ʃ* don't be so snappish! - *zuqq*ª *ʕagal-ak* push off! **2** to incite. *zaqquu-ha ʕalayya ʕaʃaan yiḍayyaʕuu-ni* they incited her against me to ruin my life. — /vi/ **3** *[slang]* to push off, get going. *ḥ-azuqq*ⁱ *baqa* I'll be going then. *nizuqq*ª *ʕas-suuq* let's push off to the market. - vn *zaqq, zaqaqaan*; ava *zaaqiq*; pva *mazquuq*.

زقّة *zaqqa* /inst n, pl *-aat*/ **1** a push. *ʔil-ʕarabiyya kaanit ʕayza zaqqa ʕaʃaan il-mutoor yiftaṿal* the car needed a push to get the engine going. **2** an incitement. *kaanit zaqqa muṿriḍa sabbibit kull illi ḥaṣal* it was a biased incitement that caused all that happened.

اتزقّ *ʔitzaqq* or *ʔizzaqq* /vi/ passive of *zaqq*. - iva *mitzaqq*.

انزقّ *ʔinzaqq* = *ʔitzaqq*. - iva *minzaqq*.

زقّق *zaqqaq* /vt/ **1** to involve (s.o. or o.s.) by force or without invitation. *balaaf tizaqqaq nafs-ak fi-lli yxuṣṣ*ⁱ *ṿeer-ak* don't interfere in other people's business! **2** to force-feed (pigeons). - vn *tazqiiq*; ava *mizaqqaq*.

اتزقّق *ʔitzaqqaq* or *ʔizzaqqaq* **1** /vi/ to intrude, interfere without invitation. *dayman yizzaqqaq fi-xṣuṣiyyaat in-naas* he always intrudes upon people's private affairs. **2** to be force-fed (of pigeons). - ava/iva *mitzaqqaq*.

ز ق ق [2]

زقاق *zuqaaq* /n pl *-aat*/ dead-end alley or lane, cul-de-sac.

ز ق ل

زقل *zaqal (u)* /vt/ to throw (away), cast, hurl, fling. *zaqal il-ḥagar biʕiid* he hurled the stone away. - vn *zaql*; ava *zaaqil*; pva *mazquul*.

زقلة *zuqla* /n pl *-aat, zuqal*/ cudgel.

اتزقل *ʔitzaqal* or *ʔizzaqal* /vi/ to be thrown, be hurled, be flung. - iva *mitziqil*.

انزقل *ʔinzaqal* = *ʔitzaqal*. - iva *minziqil*.

زقّل *zaqqal* /vt/ to throw or fling several times. ‖*da bi-yzaqqal* he is mad, he is out of his mind. - vn *tazqiil*; ava/pva *mizaqqal*.

اتزقّل *ʔitzaqqal* or *ʔizzaqqal* /vi/ to be thrown or flung several times. - iva *mitzaqqal*.

ز ق ل ط

زقلط *zaqlaṭ* **1** /vt/ **1a** to form (s.th.) into a lump or bundle. **1b** to cause to become healthy and chubby. **2** /vi/ **2a** to become lumpy. **2b** to become healthy and chubby. - vn *zaqlaṭa*; ava/pva *mizaqlaṭ*.

زقلوطة *zaqluuṭa* /n pl *zaqaliiṭ*/ lump.

زقليط *zuqleeṭa* = *zaqluuṭa*.

اتزقلط *ʔitzaqlaṭ* or *ʔizzaqlaṭ* /vi/ **1** to be formed into a

lump or bundle. **2** to be made healthy and chubby. - vn *tizaqliiṭ*; iva *mitzaqlaṭ*.

ز ق م

زقّم *zaqqam* /vt/ to force-feed (especially ducks or geese) in order to fatten up. - vn *tazqiim*; ava/pva *mizaqqam*.

اتزقّم *ʕitzaqqam* or *ʕizzaqqam* /vi/ to be force-fed (of a duck or goose). - iva *mitzaqqam*.

ز ق ن ط ط see ص غ ر: *zuqanṭaṭ, zuqanṭuup*

ز ك ا see ز ك ى ¹: *zika, zakaah*

ز ك ء see ز ك ى ²: *zakaaʕ*

ز ك ب see ز ك ى ب: *zikiiba*

ز ك ت ت see ج ك ت ت: *zakitta*

ز ك ر ¹

ذكر *zakar*² *(u)* /vt/ **1**↑ to mention. *zakar ʕasamii-hum fil-galsa* he mentioned their names in the session. *di ma-lhaa-ʃ zikr* this isn't worth mentioning. - /the literary passive imperfect also occurs/ *ḫaaga la tuzkar* something negligible. *taqaddum yuzkar* noteworthy progress. **2** to remember, keep in mind, think of (s.o. or s.th.) again and again. *ʕil-ʕaaqil laazim yuzkur il-moot dayman* a wise man should always remember that one day he will face death. *ʕana m-azkur-ʃ il-ḫikaaya di* I don't remember that matter. — /vi/ **3** to participate in a dhikr. - vn *zikr*; ava *zaakir*; pva *mazkuur*.

ذكر *zikr* /n pl *ʕazkaar*/ **1** remembrance, mention, recollection. ‖ *ʕala zikr* ... speaking of ..., as in *ʕala zikr il-ʕagaaza ḫa-tsaafir ʕimta* while on the subject of the vacation, when are you going away? - *xaalid* (or *ʕaaʈir* or *ʈayyib) iz-zikr* ≈ of blessed memory (reference to one deceased). **2** *[Isl]* dhikr, Sufi ritual based on the repeated mention of the name and epithets of God. **3** *ʕiz-zikr* (also *ʕiz-zikr il-ḫakiim*) *[Isl]* the Koran.

ذاكرة *zakra, zaakira*↑ /n/ memory, power of memory. *ʕandu ʕiwwit zakra* he has a good memory.

مذكور *mazkuur* /n */ *[leg]* one mentioned. *ʕil-mazkuriin ʕaʕlaa* the above-mentioned (ones). ‖ *ʕil-mazkuur* derisive reference to one not present ≈ you-know-who.

ذكرى *zikra* /n pl *zikrayaat*/ memory, reminiscence. *zikra sanawiyya* an annual remembrance.

ذكريات *zikrayaat* /pl n/ memoirs.

ذكّير *zakkiir* /n pl *zakkiira*/ *[Isl]* one who practises the dhikr.

اتذكر *ʕitzakar* or *ʕizzakar* /vi/ **1** to be mentioned. **2** to be remembered, be kept in mind. - iva *mitzikir*.

انذكر *ʕinzakar* = *ʕitzakar*. - iva *minzikir*.

ذكّر *zakkar* /vt/ to remind. *zakkar-u laḫsan yinsa* remind him lest he forget. *ʕil-walad zakkar-ha bi-bn-a-ha* the boy reminded her of her son. - vn *tazkiir*; ava/pva *mizakkar*.

تذكرة *tazkara* (also *taskara*) /n pl *tazaakir*/ **1** ticket. *bi-yiqṭaʕ it-tazaakir ʕala l-baab* he buys the tickets at the door. *daxalna ʕand*ⁱ *ʃibbaak it-tazaakir* we went in by the box office. ‖ *nuṣṣ*ⁱ *tazkara* half-fare ticket. **2** prescription.

تذكرجى *tazkargi* /n pl *-yya*/ ticket-seller.

تذكار *tizkaar, tazkaar* /n pl *-aat*/ **1** souvenir. **2** memorial.

تذكارى *tizkaari, tazkaari* /adj/ **1** souvenir. *ṣuura tazkariyya* a souvenir photograph. **2** commemorative, memorial.

مذكّرة *muzakkira, muzakkara, mizakkara* /n pl *-aat*/ **1a** memorandum. **1b** formal registration of a loss etc. (made at a police station). **2** set of lecture notes handed out by a lecturer to students.

مذكّرات *muzakkaraat* /pl n/ memoirs.

اتذكّر *ʕitzakkar* or *ʕizzakkar* /vt/ to remember. *ʕitzakkarit ibn-a-ha* she remembered her son. - vn *tazakkur*↑; ava *mitzakkar*.

ذاكر *zaakir* /vt/ to study (lessons). *bi-tzaakir ʕingliizi leeh* why are you revising English? *ma-b-yiqdar-ʃ*ⁱ *yzaakir ʕilla bil-leel* he can study only at night. - vn *muzakra, mizakra*; ava *mizaakir*.

اتذاكر *ʕitzaakir* or *ʕizzaakir* /vi/ to be studied. - iva *mitzaakir*.

ز ك ر ² see د ك ر: *zakar*¹, *muzakkar*

ز ك ص ل

ذوكصولوجيّة *zukṣulugiyya* <Gr *doksologia*> /n pl *-aat*/ *[Chr]* doxology.

ز ك ك

زكّ *zakk, zakk (u)* /vi/ to limp. *bi-yzukk*ⁱ *bi-ʃ-ʃimaal* he limps with the left leg. - vn *zakakaan, zakk*; ava *zaakik*.

ز ك م

زكّم *zakam (i, u)* /vt/ to cause to suffer from nasal congestion, give a stuffy nose to. *ma-tiqfil i-ʃ-ʃibbaak - ḫa-tizkim-ni* close the window! you'll give me a cold!

- vn *zakamaan*; ava *zaakim*; pva *mazkuum*.
زكمة *zakma, zakma* /n pl *-aat*/ a case of nasal congestion.
زكام *zukaam* /n/ nasal congestion.
اتزكم *ʔitzakam* or *ʔizzakam* /vi/ to be given or get a stuffy nose. - ava/iva *mitzikim*.
انزكم *ʔinzakam* = *ʔitzakam*. - ava/iva *minzikim*.
زكّم *zakkim* **1** /vi/ to get or be given a stuffy nose. **2** /vt/ = *zakam*. - vn *tazkiim*; ava/pva *mizakkim*.
اتزكّم *ʔitzakkim* or *ʔizzakkim* = *ʔitzakam*. - ava/iva *mitzakkim*.

ز ك ى [1]

زكا *zika* /n/ *[Isl]* alms tax (calculated according to fixed rules).
زكاة *zakaah↑* = *zika*. *zakaat il-fiṭr* alms for the poor paid by households at the end of Ramadan.
زكى *zaki[1]* /adj */ good, pleasant (especially of odours). *nafs[i] zakiyya* a virtuous person. ‖*ʔir-rawaayiḥ iz-zakiyya [iron]* the smell of the sewers.
أزكى *ʔazka[1]* /el/ more/most pleasant. ‖*ʕaleeh ʔafḍal iṣ-ṣalaah wi-ʔazka s-salaam [Isl]* a formula of praise (the best blessing and most everlasting peace be upon him) used when the name of the Prophet Muhammad is mentioned.
زكّى *zakka* **1** /vi/ *[Isl]* to give obligatory alms or donations according to Islamic precepts. ‖*zakki ʕan gamaal-ik* ≈ give us a taste of the wealth of beauty God has given you (a flirtatious remark). - *ya mzakki ḥaal-ak yibakki [prov]* (alms-giver, your state causes weeping) not all who give alms are good. **2** /vt/ to recommend. *ʔana zakkeet-ak ʕand ir-raʔiis bitaaʕ-ak* I put in a good word for you to your boss. *huwwa ḥa-yzakkii-ha lil-waẓiifa g-gidiida* he will recommend her for the new post. - vn *tazkiyya, tazkiya↑*; ava *mizakki*.
تزكية *tazkiyya, tazkiya↑* /n pl *-aat*/ recommendation. *gaab ʃihaadit tazkiyya mil-ittiḥaad l-iʃtiraaki l-ʕarabi* he got a recommendation letter from the Arab Socialist Union. ‖*faaz bit-tazkiya* to win (in an election) as an unopposed candidate.
اتزكّى *ʔitzakka* or *ʔizzakka* /vi/ to be recommended. - iva *mitzakki*.

ز ك ى [2]

ذكاء *zakaaʔ* /n/ intelligence.
ذكى *zaki[2]* /adj pl *ʔazkiya*/ intelligent.
أذكى *ʔazka[2]* /el/ more/most intelligent.

ز ك ى ب

زكيبة *zikiiba* /n pl *zakaayib*/ large gunny sack (particularly one with a capacity of one ardeb).

ز ل ب

زلابية *zalabya* /coll n/ doughnut-like sweetmeat(s) fried and soaked in syrup. ‖*miʃ kull il-waqʕaat zalabya [prov]* ≈ you cannot count on getting away with it every time.
زلبانى *zalabaani* /n */ *[obsol]* maker of *zalabya*. ‖*la tquul kaani wala maani wala dukkaan iz-zalabaani* ≈ don't utter a word of protest!

ز ل ب ط ط

زلبطّة *zalabaṭṭa* /n pl *-aat*/ totally bald pate. ‖*ʕiryaan zalabaṭṭa* stark naked.

ز ل ح ف

زلحفة *zilḥifa, zulḥifa* /n pl *-aat, zalaaḥif*/ tortoise. - also *zuḥlifa, ziḥlifa, suḥlifa, sulḥifa, siḥlifa, silḥifa*.

ز ل ز ل [1]

زلزل *zalzil* /vt/ to shake (of, or as though of, an earthquake). *ṣuwat-ha zalzil il-ḥeṭaan* her screams shook the walls. - vn *zalzala*; ava/pva *mizalzil*.
زلزال *zilzaal* /n pl *zalaazil*/ earthquake.
اتزلزل *ʔitzalzil* or *ʔizzalzil* /vi/ to be shaken (by, or as though by, an earthquake). - iva *mitzalzil*.

ز ل ز ل [2]

زلزلى *zilizli* /coll n/ porcelain-like wall-tile(s).

ز ل ط

زلط *zalaṭ[1] (u)* /vt/ **1** to swallow (food) without chewing, gulp down (food). **2** to strip clean, shave clean. *zalaṭ raas-u* he shaved his head clean. ‖*zalṭ[i] malṭ* stark naked. - vn *zalṭ*; ava *zaaliṭ*; pva *mazluuṭ*.
زلط *zalaṭ[2]* /n/ **1** /coll/ gravel, pebble(s). *ʔiz-zalaṭ iṣ-ṣawwaan* flint. *ʔiz-zalaṭ il-ʔiswid* basalt. *miʕdit-u tihḍim iz-zalaṭ* he'll eat anything. *ʔig-gaʕaan yiqarʕaf iz-zalaṭ [prov]* (a hungry man will chew gravel) a desperate man will try anything. *ḥabiib-ak yiblaʕ-lak iz-zalaṭ wi-ʕadiww-ak yitmannaa-lak il-ʁalaṭ [prov]* ≈ your friend will accept anything you do, but your enemy is always trying to find fault. *wabuur iz-zalaṭ* steam-roller. **2** aborted foetus (of an animal).
زلطة *zalaṭa* /unit n, pl *-aat*/ a pebble. ‖*raas-u zalaṭa* (1) he's bald. (2) he has a shaven head. (3) he is obstinate. - *muxx-u zayy iz-zalaṭa* ≈ he's a blockhead.
أزلط *ʔazlaṭ* /adj, fem *zalṭa*, pl *zulṭ*/ bald. *raas zalṭa* a bald head.

زلّوط *zalluuṭ* : *ɛeef zalluuṭ* brown bread made in large thick round loaves.

انزلط *ʔitzalaṭ* or *ʔizzalaṭ* /vi/ **1** to be swallowed without chewing. **2a** to strip oneself, undress oneself. *ʔitzalaṭ*^{i} *min huduum-i* I took off my clothes. **2b** to be stripped, be made bare. *raas-i tzalaṭit (bil-muus)* my head was completely shaven. - ava/iva *mitziliṭ*.

انزلط *ʔinzalaṭ* = *ʔitzalaṭ*. - iva *minziliṭ*.

زلّط *zallaṭ* **1** /vt/ **1a** to lay gravel or pebbles on (a road). **1b** *[rur]* to plaster (a wall or floor) with mud or clay. **2** /vi/ to become smooth and hard. *ʔil-arḍ*^{i} *zallaṭit* the ground dried hard. *raas-u zallaṭit* he became bald. - vn *tazliiṭ*; ava/pva *mizallaṭ*.

انزلّط *ʔitzallaṭ* or *ʔizzallaṭ* /vi/ passive of *zallaṭ* 1. - iva *mitzallaṭ*.

ز ل ع

زلعة *zalɛa* /n pl *zilaɛ*/ large storage jar with handles (usually for water) (see Pl.A, 10).

زلّع *zallaɛ* /vt/ **1** to accept with difficulty, force upon oneself. *ʔil-waaḥid miʃ qaadir yizallaɛ il-luqma fil-ḥarr-i-da* one is unable to force down any food in this heat. **2** to store in a *zalɛa*. - vn *tazliiɛ*; ava/pva *mizallaɛ*.

انزلّع *ʔitzallaɛ* or *ʔizzallaɛ* /vi/ **1** to be accepted with difficulty. **2** to be stored in a *zalɛa*. - iva *mitzallaɛ*.

ز ل ع ك ك

زلعكّة *zalaɛukka* /n pl *-aat*/ a small *zalɛa*. ‖ *ʔil-bitt*^{i} *ḥilwa w-beeḍa bass*^{i} *ʃayla s-samna fiz-zalaɛukka [rur]* a village wedding-song complimenting the bride on her beauty even though she is an unsophisticated country-girl.

ز ل ف

زلف *zalaf (i)* /vi/ to slip, trip. *kilma zalafit min lisaan-i ma-kunt*^{i}*-ʃ qaaṣid ʔaqul-ha* a word slipped out which I had never intended to utter. - vn *zalafaan*; ava *zaalif*.

انزلّف *ʔitzallif* or *ʔizzallif* /vi/ to fawn (on s.o.), make up (to s.o.). *balaaf titzallif lil-mudiir* don't fawn on the director. - ava *mitzallif*.

ز ل ق

زلق *zalaq*^{1} *(u)* /vi/ to slip, slide, glide. *riglay-ya zalaqit fiṭ-ṭiin* my feet slipped in the mud. - vn *zalaq, zalq, zalaqaan*; ava *zaaliq*.

زلق *zalaq*^{2} /n/ (street) mud. - /adjectivally/ *kull is-sikak zalaq* all the roads are slippery.

زلقة *zalaqa* = *zalaq*^{2}.

زلاّقة *zallaaqa* /n pl *-aat*/ **1** slide, chute. **2** sleigh, sled.

زلّيق *zulleeqa* /n pl *-aat*/ slippery road or path.

مزلقان *mazlaqaan* /n pl *-aat*/ **1** railway crossing. **2** *[naut]* slip.

انزلق *ʔinzalaq* /vi/ to slip, slide, glide. *minziliq fooq saṭḥ il-mayya* gliding along the surface of the water. ‖ *ʔinzilaaq ɣuḍruufi [path]* slipped disc, prolapsed disc. - vn *ʔinzilaaq*; ava *minziliq*.

زلّق *zallaq* **1** /vt/ to make slippery or muddy. **2** /vi/ to become slippery or muddy. - vn *tazliiq*; ava/pva *mizallaq*.

انزلّق *ʔitzallaq* or *ʔizzallaq* /vi/ to become or be made slippery. - ava/iva *mitzallaq*.

ز ل ق و م

زلقومة *zalquuma* /n/ protrusion.

ز ل ق و ن

زلقون *zalaqoon* <perh T *sülüğen*> /n/ red lead. - also *salaqoon*.

ز ل ك see ز ا : *zaalik*

ز ل ل^{1}

زلّ *zall*^{1} *(i)* /vi/ to slip. *rigl-i zallit* my foot slipped. ‖ *ɛen-ha zalla* she has a roving eye, she is a loose woman. - vn *zalalaan, zall*; ava *zaalil*.

زلّة *zalla* /unit n, pl *-aat*/ a slip, a mistake, an error, a sin. *ya-rabb iɣfir-li zallaat-i* O God, forgive my sins. *zallit lisaan* a slip of the tongue. ‖ *zallit qadam* (a slip of the foot) ≈ a sin.

زلل *zalal* = *zalla*.

ز ل ل^{2}

زلال *zalaal* /adj invar/ pure (of water). ‖ *ḥalaal-i zalaal-i* it's my own to enjoy.

زلال *zulaal* /n/ **1** albumen. **2** oedema.

زلالى *zulaali* /adj */ of or pertaining to *zulaal*.

ز ل ل^{3}

ذلّ *zall*^{2} *(i)* **1** /vt/ to humiliate, debase. *ma-fii-ʃ ḥaaga bi-tzill il-bani ʔaadam zayy il-ḥawga* nothing humiliates a man like want. ‖ *ḥ-azill-ak* I'll show you! I'll bring you low! **2**↑ /vi/ to become lowly, be debased. *w-adii-ni ʔahu baɛd il-ɛizz*^{i} *zalleet* after enjoying greatness here I am reduced to nothing. *ɛazz*^{i} *man qanaɛ wi-zall*^{i} *man ṭamaɛ [prov]* ≈ he who is content is strong, but he who is greedy is brought low. - vn *zull*; ava *zaalil*; pva *mazluul*.

ذلّ *zull* /n/ humiliation, abasement. *firib min kaas iz-zull* he has drunk from the cup of shame.

ذلّة *zilla, zulla* /n pl *-aat*/ shameful mistake. *ʔinta*

ḥa-timsik-ha ɛalayya zilla are you going to use it against me forever? *zayy[i] ma ykuun waqiɛ-li ɛala zulla* ≈ (he orders me around) as if he knows a guilty secret (whose exposure I would do anything to avoid).

ذليل *zaliil* /adj pl *ʕazilla*/ despicable, contemptible.

أذلّ *ʕazall* /el/ more/most debased.

اذلال *ʕizlaal* /n/ humiliation, debasement.

مذلّة *mazalla* /n/ humiliation. *ʕif-fakwa l-veer allaah mazalla [prov]* to complain to other than God is a humiliation.

اتذلّ *ʕitzall* or *ʕizzall* /vi/ to be humiliated, be debased. - iva *mitzall*.

انذلّ *ʕinzall* = *ʕitzall*. - iva *minzall*.

ذلّل *zallil* /vt/ to overcome, surmount. *laazim nizallil kull iṣ-ṣuɛubaat marra waḥda* must we overcome all the difficulties at once? - vn *tazliil*; ava/pva *mizallil*.

اتذلّل *ʕitzallil* or *ʕizzallil* /vi/ 1 to be overcome, be surmounted. 2 to humble oneself, lower oneself (before s.o.). *ʕitzallilt-i-lu min veer fayda* in vain did I humble myself before him. - vn *tazallul*↑; ava/iva *mitzallil*.

استذلّ *ʕistazall* /vt/ to subjugate, bring into submission or thrall. *ʕinta ḥa-tistizill-a-ha bil-filuus illi xadit-ha minnak* are you going to enslave her for the money she took from you? - ava *mistizill*.

ز ل ل و م

زلّومة *zalluuma* /n pl *-aat, zalaliim*/ trunk of an elephant.

ز ل م ك ك

زلمكّة *zalamukka* /n pl *-aat*/ parson's nose (of a fowl). - also *zamuuka, zamukka*.

ز ل ن ط ح

زلنطحى *zalanṭaḥi* /pl *-yya*/ 1 /adj/ penniless, destitute. 2 /n/ vagabond; tramp.

ز م ا ل ك

الزمالك *ʕiz-zamaalik* /prop n/ upper class district of Cairo, situated on the Guezira.

زملكاوى *zamalkaawi* /n pl *-yya*/ one who supports or plays for the Zamalek Sports Club (especially the football team).

ز م ب see ز ن ب

ز م ب ر see ز ن ب ر

ز م ب ق see ز ن ب ق

ز م ب ل see ز ن ب ل

ز م ب ل ك see ز ن ب ل ك

ز م ب و خ see ز ن ب و خ

ز م ب ى ل see ز ن ب ى ل

ز م ت see also [1] ز ن ت

زمت *zamat (i)* /vi/ to become sultry or stifling (of weather). - vn *zamataan*; ava *zaamit*.

زمتة *zamta* /n/ sultriness, stuffiness. - /adjectivally/ *ʕid-dinya zamta* the weather's stifling.

زمّت *zammit* /vt/ to stifle, suffocate. *sidr-i mzammit* my chest is constricted. - vn *tazmiita*; ava/pva *mizammit*.

اتزمّت *ʕitzammit*↑ or *ʕizzammit*↑ /vi/ to become strict or puritanical. - vn *tazammut*; ava *mitzammit, mutazammit*.

ز م ج ر

زمجر *zamgar* /vi/ to roar (of a lion). - vn *zamgara*; ava *mizamgar*.

[1] ز م ر

زمر *zumur[1]* see *zamr*.

زمر *zamr* /n/ piping, piping sound. *ṭabl[i] w-zamr* (1) drumming and piping. (2) fanfare, great deal of noise. *ṭubul ṭabl-u w-zumur zamr-u* he became widely known, he became prominent. *li-llaah ya zamr-i* ≈ all my effort has been wasted.

زمّار *zammaar* /n pl *-iin, zammaara*/ piper. *yimuut iz-zammaar wi-ṣbaaɛ-u yilɛab [prov]* the piper dies and his finger (still) plays.

زمّارة *zummaara* /n pl *-aat, zamamiir*/ 1 pipe or flute-like instrument made of cane or wood, penny whistle. ‖*ḥ-aṭallaɛ zummaarit raqabt-ak* I'll tear out your windpipe! - *tigmaɛ-hum zummaara wi-tfarraq-hum ɛaṣaaya [prov]* a pipe gathers them, a stick scatters them (of the mob). 2 sound made on the horn of a vehicle. *ʕiqrab-lu zummaara* sound your horn at him! give him a hoot!

زمّيرة *zummeera* = *zummaara*.

مزمار *muzmaar* /n pl *mazamiir*/ wind instrument made of cane or wood. *muzmaar baladi* double-reed wooden pipe with a flared bell (see Pl.J, 18). *muzmaar nitaaya* pipe of the *baladi* type in the treble range. *muzmaar dakar* pipe of the *baladi* type in the baritone range. *muzmaar turki* double or treble bamboo pipe (see Pl.J, 21).

مزمور *mazmuur* /n pl *mazamiir*/ psalm.

زمّر *zammar* /vi/ 1 to pipe, play on a musical wind in-

strument. *ʕilli yzammar ma-yvaṭṭii-ʃ daqn-u [prov]* (the piper cannot cover his chin) ≈ you cannot hide your actions. **2** to hoot (on a vehicle's horn). - vn *tazmiir*; ava *mizammar*.

اتزمّر *ʔitzammar*[1] or *ʔizzammar*[1] /vi/ to be played on a *muzmaar*. - iva *mitzammar*.

ز م ر[2]

زمر *zimir, zumur*[2]↓ *(a)* /vi/ to grumble, complain, be discontented. - vn *zamar*; ava *zamraan*.

زمران *zamraan*↓ /adj */ grumbling, discontented.

اتذمّر *ʔitzammar*[2] or *ʔizzammar*[2] /vi/ to grumble in resentment, complain, grouse. - vn *tazammur*; ava *mitzammar*.

ز م ر[3] see ز م م ى ر: *zummeer*

ز م ر د

زمرّد *zumurrud* /coll n/ emerald(s). ‖*zumurrud ʔaṣfar* topaz.

زمرّدة *zumurruda* /unit n, pl *-aat*/ an emerald.

زمرّدى *zumurrudi* /adj/ of or pertaining to emeralds.

ز م ز غ

زمزغ *zamzaɣ* /vi/ **1** to cheat (in money matters, games or gambling). **2a** to break a promise. **2b** to give a false promise. - vn *zamzaɣa*; ava *mizamzaɣ*.

ز م ز ق

زمزق *zamzaq* /vi/ **1** to grumble, complain. *qaʕad yizamzaq lamma ṭalabna ʔinnu ysaʕid-na* he grumbled when we asked him to help. **2** to behave crookedly (over money). *zamzaq fid-deen* he was devious concerning (payment of) the debt. - vn *zamzaqa*; ava *mizamzaq*.

ز م ز م

زمزم *zamzam* /prop n/ name of a well at Mecca. ‖*min mayyit zamzam [Isl]* invocatory formula addressed to one performing ritual ablutions (the response being *gamʕan*).

زمزميّة *zamzamiyya* /n pl *-aat*/ water-canteen (made of metal or canvas).

زمزم *zamzim* **1** /vt/ to wash (s.th.) in water from the well *zamzam*. **2** /vi/ to wash oneself in water from the well *zamzam*. - vn *zamzama*; ava/pva *mizamzim*.

اتزمزم *ʔitzamzim* or *ʔizzamzim* /vi/ to be washed in water from the well *zamzam*. - iva *mitzamzim*.

ز م ط

زمط *zamaṭ (u)* **1** /vt/ to make tight, make a tight fit. *ʔit-tarzi zamaṭ il-badla zyaada ʕan il-luzuum* the tailor made the suit too tight. **2** /vi/ to become tight. *ʔig-gazma g-gidiida zamṭa ʕala riglay-ya* the new shoes are a tight fit. *baṭn-i zamaṭit ʕalayya* my stomach became distended. - vn *zamṭa*; ava *zaamiṭ*.

زمّط *zammaṭ* = *zamaṭ*. - vn *tazmiiṭ*; ava/pva *mizammaṭ*.

تزميطة *tazmiiṭa* /pl *-aat*/ instance noun of *tazmiiṭ*.

اتزمّط *ʔitzammaṭ* or *ʔizzammaṭ* /vi/ **1** to dress in tight clothes. **2** to become distended (of the stomach). - ava/iva *mitzammaṭ*.

ز م ق

زمق *zimiq, zumuq (a)* /vi/ to feel bored, fed up or weary. - vn *zamaq, zamaqaan*; ava *zamqaan*.

زمقان *zamqaan* /adj */ bored, fed up, weary.

ز م ك

زمكة *zamukka* /n pl *-aat*/ **1** root, dock (of a horse's tail). **2** parson's nose (of a fowl). - also *zalamukka*.

زموكة *zamuuka* = *zamukka*.

ز م ل

زملة *zumla* /adv/ in a group. *ḥa-nḥigg*[1] *zumla* we'll go on the pilgrimage as a group.

زمالة *zamaala* /n/ comradeship.

زميل *zimiil, zamiil* /n pl *zumala, zamaayil*/ **1** colleague, team-mate. *kaan zimiil-i fil-madrasa* he was my schoolmate. *zamayl-u fif-fuvl* his workmates. **2** companion.

زميلة *zimiila, zamiila* /n pl *-aat, zumalaat*/ **1** female colleague. **2** female companion.

زامل *zaamil* /vt/ **1** to take or have as a colleague or companion. **2** *[rur]* to co-operate with, exchange services with. *ʕandu ḥumaara waḥda bi-yzaamil ʕaleeha gaar-u* he owns one donkey, which he pairs up with that of his neighbour (on a turn and turn about basis). - vn *muzamla, mizamla, zimaala*; ava *mizaamil*.

اتزامل *ʔitzaamil* or *ʔizzaamil* /vi/ passive of *zaamil*. - ava *mitzaamil*.

ز م ل ك see ز م ا ل ك: *ʔiz-zamaalik, zamalkaawi*

ز م م[1]

زمّ *zamm*[1] *(i)* /vt/ to press, press together. *zamm*[1] *fafayf-u* he pressed his lips together. - vn *zamm, zamamaan*; ava *zaamim*; pva *mazmuum*.

زمام *zimaam*[1] /n/ **1** /pl *-aat/ [leg]* area of jurisdiction. *zimaam il-balad* tax-paying lands of a village. *ʔaraaḍi daaxil iz-zimaam* tax-paying lands. *ʔarḍ*[1] *xaarig iz-zimaam* an area of land which pays no taxes. *misaaḥit fakk iz-zimaam* survey concerned with establishing

areas of land ownership. **2** /pl *ʕazimma↑*/ halter, rein, bridle. ‖*zimaam il-ʕumuur* control of affairs. - *ʕitwalla zmaam il-ḥukm* ≈ to seize the reins of power. - *ʕiz-zimaam filit minnu* he lost control.

زمّم *zammim* /vt/ to squeeze the breath out of (s.o.). - vn *tazmiim*; ava/pva *mizammim*.

اتزمّم *ʕitzammim* or *ʕizzammim* /vi/ to have the breath squeezed out of one. - iva *mitzammim*.

ز م م ²

ذمّ *zamm², damm²* ↓*(i)* /vt/ to speak ill of. *ʠabl^i ma tzimmi walla timdaḥi ḥuṭṭi nafs-ik fi-maṭraḥ-i [prov]* put yourself in my place before you judge me. - vn *zamm*; ava *zaamim*; pva *mazmuum*.

ذمّة *zimma* /n pl *zimam*/ **1** integrity, sense of decency. *ma-baʠaa-ʃ fii zimma wala ʕimaan* there is no longer any integrity or faith. ‖*ma-ɛanduu-ʃ zimma* he's dishonest. - *zimmit-u wasɛa* or *zimmit-u ʕastik* he's a man of flexible integrity. - *xallaṣt^i zimmit-i* my conscience is clear, I've done all I can. - *biz-zimma* and *bi-* (or *fi-*) *zimmit-ak* honestly? is that really so? as in *bi-zimmit-ak miʃ ʃuvl-u mazbuuṭ* honestly now, isn't his work good? - *bi-zimmit-i* really, truly, as in *bi-zimmit-i ʕinti gamiila* really, you're beautiful! **2** custody, care. *ɛandu ʃ-zimmit-u mablaɣ kibiir* he has a large sum in his custody. ‖*fi-zimmit-(u) li-* (he) owes ..., as in *fi-zimmit-i l-ṣaaḥib il-beet ʕugrit talatt uʃhur* I owe the landlord three months' rent. - *fi-* (or *ɛala) zimmit* (1) for the purpose of, as in *ḥagz^a ɛala zimmit it-taḥqiiq* detention pending investigation. (2) dependent upon, as in *lu talat ɛiyaal fi-zimmit-u* he has three children dependent upon him. (3) married to (said only of women), as in *ma-baʠit-ʃ^i ʃ-zimmit-i* she's no longer my wife, *ʕil-itneen ɛala zimmit-u* the two of them are his wives.

ذمام *zimaam²* /n pl *-aat*/ *[bank]* claim (in the form of a debit or credit).

اتذمّ *ʕitzamm* /vi/ to be ill-spoken of. - iva *mitzamm*.

انذمّ *ʕinzamm* = *ʕitzamm*. - iva *minzamm*.

ز م م ي ر

زمّير *zummeer* /n/ wild oats (Arena fatua). ‖*naas zayy iz-zummeer* people who crop up everywhere they aren't wanted.

ز م ن

زمن *zaman* /n pl *ʕazmaan*/ **1** period, age, era. *ʕiz-zaman da wiḥiʃ* these are bad times. *da min zaman biɛiid* that was ages ago. *fi-zaman il-malik fuʕaad* in the era of King Fuad. ‖*ḥa-naaxud zaman-na w-zaman ʁerna* (shall we take our time and that of others too?) we've had our time, one can't expect to live twice over. — /no pl/ **2** (absolute) time. *baʠa-lha waʠfa ɛal-maḥaṭṭa saɣteen zaman* she's been waiting at the bus stop for two whole hours. *ʠadiim ʠidam iz-zaman* as old as time. *balwa min balaawi z-zaman* an all time disaster. ‖*ɛala ʕaaxir iz-zaman* ≈ things have come to a pretty pass when ..., as in *ɛala ʕaaxir iz-zaman bi-tkallim-ni biṭ-ṭariiʠa di* it's come to a pretty pass when you speak to me like that, *ʕil-ʕawlaad itxanfisu ɛala ʕaaxir iz-zaman* bad times are really here now that boys have become hippies. - *ʕana w-huwwa wiz-zaman ṭawiil* ≈ I'll get even with him in the end! **3** fortune, life. *hiyya b-tiftikii-li miz-zaman* she's complaining to me about life. *ʕaah minnak ya zaman* oh life, how hard you are! *ʕirkin-ha liz-zaman* ≈ put it aside for a rainy day!

زمنى *zamani* /adj/ time-, pertaining to time, temporal. *ʠunbila zamaniyya* time-bomb.

زمان *zamaan* /n/ **1** time, period, era. *zamaan il-mamaliik* the days of the Mamelukes. *doon juwaan zamaan-u* the Don Juan of his time. *da sulṭaan zamaan-u* ≈ he's got it made, he's in clover. **2** long period of time, age. *w-alla zamaan* it's been ages! (since I saw you). *baʠaa-li zamaan ma-kalt^i-ʃ ruzz^i b-laban* it's an age since I ate rice pudding. *da min zamaan* that was ages ago. *ma-ʃuft-a-haaʃ min zamaan* I haven't seen her for ages. **3** times past, the old days. *zayy^i zamaan* as it used to be. *feen ʠahwit zamaan* where's the coffee we used to drink in the (good) old days? *kaanu b-yistaɣmiluu-ha zamaan* they used to use it in the old days. **4** proper or expected moment. *zaman-ha gayya* she ought to be along at any moment. *zamaan-ak guɛt* you must be hungry by now. *kaan zamaan kull^a ḥaaga xilṣit law kunti saɣidtii-ni* everything would have been completed by now if you'd helped me.

مزمن *muzmin* /adj/ chronic (of an illness).

ز م ه ر

زمهرير *zamhariir↑* /n/ bitterly cold weather. - /adjectivally/ *ʕid-dinya zamhariir* it's bitterly cold.

ز ن ب ¹

زنبة *zumba* <T *zmba*> /n pl *zunab*/ **1** punch, centre punch. **2** stab in the back, dirty and malicious trick. *ḍarab-ni* (or *ʕiddaa-li) zumba* he played a dirty trick on me.

زنبجى *zumbagi* /n pl *-yya*/ back-stabber, player of dirty and malicious tricks.

ز ن ب ²

ذنب *zamb* /n pl *zunuub*/ fault, offence, sin. *ʕiz-zamb^i*

miʃ ɛaleena it's not our fault! *ma-luu-ʃ zamb* it's no fault of his. *rabb-i-na yixfir-lu znuub-u* may God forgive him his sins. *ṭabuur zamb* punishment drill. ‖ *ʃana zamb-i ʃeeh* (1) what fault is it of mine? (2) what's it got to do with me? (3) what did I do to deserve this? - *(ya-tara) zamb[i] miin* phrase suggesting that the victim of an apparently chance circumstance has committed in the past a wrong which has caught up with him. - *zamb-u ɛala gamb-u* he'll get (or: he has got) his just deserts.

ذنّب *zannib* /vt/ to punish. *law ma ɛamalt[i]-ʃ il-waagib ḥa-yzannibuu-ni fil-madrasa* if I don't do my homework they'll punish me at school. *zannib-ni saaɛa fiʃ-ʃams[i] w-ʃana fi-ntiẓaar-u* he left me standing in the sun for an hour, waiting for him. - vn *tazniib*; ava/pva *mizannib*.

تذنيبة *tazniiba* /inst n, pl *-aat*/ penalty, punishment, unjust desert. *huwwa-na ɛamalt[i] ʃeeh ɛaʃaan ʃazzannib it-tazniiba di* what have I done that I should be subjected to this punishment?

اتذنّب *ʃitzannib* or *ʃizzannib* /vi/ to be punished. - iva *mitzannib*.

أذنب *ʃaznab* /vi/ to do wrong, commit a sin, make a mistake. *huwwa-na ʃaznabt[i] f-ḥaqq-ak* ≈ have I (ever) wronged you? - ava *muznib*.

مذنب *muznib* /adj */ guilty.

ز ن ب ر

زنبور *zambuur* /n pl *zanabiir*/ 1↑ hornet. 2 *[coarse]* clitoris.

ز ن ب ق

زنبق *zambaq[1]* /coll n, pl *zanaabiq*/ *[bot]* 1 iris. 2 lily. ‖ *zambaq il-baḥr* starfish.

زنبقة *zambaqa* /unit n, pl *-aat, zanaabiq*/ 1 an iris. 2 a lily. ‖ *zanbaqit baḥr* a starfish.

زنبق *zambaq[2]* /vi/ to blossom (especially of an iris or lily). - vn *zambaqa*; ava *mizambaq*.

ز ن ب ل –

زنبليطة *zambaliiṭa* /vi/ noise, commotion, stir. *zeeṭa w-zambaliiṭa* brouhaha. *ʃeeh iz-zambaliiṭa di kull-a-ha* what's all this clamour about?

ز ن ب ل ك

زنبلك *zambalik* <T *zemberek*> /n pl *-aat*/ (metal) spring. *ɛarabiyya b-zambalik* a clockwork car.

ز ن ب و خ

زنبوخ *zambuux* /n/ seed case.

ز ن ب ي

زنوبيا *zanubya* <trade name> /n/ kind of cheap cigar.

ز ن ب ي ل

زنبيل *zambiil* <P *zanbîl*> /n pl *zanabiil*/ large basket made of green palm leaves.

[1] ز ن ت see also ز م ت

زنتة *zanta* /n/ closeness (of the weather).

زنت *zannit* /vi/ to become close or stifling (of the weather). - vn *tazniit*; ava *mizannit*.

تزنيتة *tazniita* = *zanta*.

[2] ز ن ت

الزناتي *ʃiz-zanaati: ʃiz-zanaati xaliifa* a warrior hero of popular epic.

ز ن ت ر

زنتر *zantar* /vi/ to become bloated. *kal wi-baṭn-u zantarit* he ate and his stomach became bloated. - vn *zantara*; ava *mizantar*.

اتزنتر *ʃitzantar* or *ʃizzantar* = *zantar*. - ava *mitzantar*.

ز ن ت و –

زنتوري *zanaṭuuri* <It *isolatore*> /n pl *zanatiir*/ *[elec]* insulator (made of glass or porcelain).

[1] ز ن ج

زنجي *zingi* /n pl *zunuug*/ negro.

[2] ز ن ج see ز ن ك: *zing, zinga, mizannig*

ز ن ج ب ل

زنجبيل *zangabiil* /n/ ginger. - also *ganzabiil, zanzabiil*.

ز ن ج ر

زنجر *zangar* /vi/ to become obstinate, behave obstinately. - vn *zangara*; ava *mizangar*.

ز ن ج ر –

زنجران *zingaraan* /n/ *[mus]* mode in Arabic music beginning on C and having D flat and B flat.

ز ن خ

زنخ *zinix* /adj/ rancid. ‖ *muxx-u zinix* he's stupid, he's slow on the uptake.

أزنخ *ʃaznax* /el/ more/most rancid.

زناخة *zanaaxa* /n/ rancidness.

زنّخ *zannax, zannix* /vi/ to turn rancid. - vn *tazniix*; ava *mizannax*.

استزنخ ʕistaznax /vt/ to consider rancid. - ava *mistaznax*.

ز ن د

زند *zind* /n pl *zunuud, zinída, zunúda, zinaad*/ **1** shoulder and upper foreleg (of animal). **2** forearm (of a human).

زناد *zinaad* /n pl *zinída*/ trigger.

زنّد *zannid* /vt/ **1** to straighten and stiffen (e.g., the neck or the back). *maa lak waaqif mizannid-li raqabt-ak - ḥa-titxaaniq maʕaaya* what are you doing bridling at me like that? you want to pick a fight with me? *zannid ḍahr-u w-naxaʕ il-ʕarabiyya* he straightened his back and heaved the car forward. **2** /vi/ to be stubborn, balk, refuse, reject. *kull-u-hum wafqu ʕilla huwwa zannid* they all agreed but he refused stubbornly. - vn *tazniid*; ava *mizannid*.

تزنيدة *tazniida* /inst n/ **1** a tensing, a stiffening. **2** an opposition, a refusal, a balking.

اتزنّد ʕitzannid or ʕizzannid /vi/ to be straightened and stiffened or straighten and stiffen (of the neck or back). - ava/iva *mitzannid*.

ز ن د ق

زندق *zandaq* /vi/ to oppose, challenge, contradict. *ḥa-tzandaq fi-wiff-i* you dare to set yourself against me? - vn *zandaqa*; ava *mizandaq*.

زندقة *zandaqa* /n/ atheism, gross heresy.

زنديق *zindiiq* /n pl *zanadqa, zanadiiq*/ atheist, gross heretic.

اتزندق ʕitzandaq or ʕizzandaq /vi/ to become or behave as a heretic or atheist. *zayy ʕ-ʕiṭaan itzandaq fi-ʕaaxir ḥayaat-u* like the devil, he ended his life an infidel. - ava *mitzandaq*.

ز ن ر

زنّار *zinnaar* /n pl *zananiir*/ **1** *[Chr]* girdle (of a priest). **2** *[naut]* gunwale strake, topmost horizontal timber in a boat's hull.

ز ن ز ا ن

زنزانة *zinzaana* <prob P *zindân*> /n pl *-aat, zanaziin*/ prison cell.

ز ن ز ب ل

زنزبيل *zanzabiil* /n/ ginger. - also *ganzabiil, zangabiil*.

ز ن ز ن

زنزن *zanzin* /vi/ to buzz, make a low vibrating humming sound. *ʕiṭ-ṭabla bi-tzanzin* the drum is buzzing (i.e. not sounding true). - vn *zanzana*; ava *mizanzin*.

زنزان *zinzaan* /n/ **1** obnoxious pestering. **2** headache caused by irritation. *rabbaa-li zinzaan fi-dmaaɣ-i* he pestered me till he gave me a headache.

ز ن ت ر see ز ن ط ر

ز ن ق

زنق *zanaq (u)* /vt/ to squeeze into a confined space, wedge in, corner. *ma-tuznuq-ʃ[i] xaṭṭ-ak kida* don't cramp up your writing like that! *zanaqt[i] ṣbaaʕ-i fil-baab* I got my finger caught in the door. *zanaqna ṭuuba taḥt il-kawitʃ* we jammed a stone under the wheel. *zanaquu-ni fil-munaqʃa* they got me into a corner in the discussion. *zanaq-li l-wazIr* he penned in my queen (in chess). ‖*maznuuq fil-filuus* in a tight spot for money. - *kaan maznuuq wi-ma-laqaa-ʃ kabineeh* he was caught short and didn't find a lavatory. - vn *zanq*; ava *zaaniq*; pva *maznuuq*.

زنقة *zanqa* /n pl *-aat*/ **1** crush, lack of space. *kaan fii zanqa gamda fig-gamʕiyya* there was an awful crush in the co-op. **2** tight spot, difficult position or situation. *kaanit fi-zanqa wiḥʃa w-ʕana saʕidt-a-ha* she was in an embarrassing situation and I helped her out. **3** narrow lane, alley. - /adjectivally/ *ʕil-ḥaara di zanqa* this lane is narrow. **4** *[carp]* cramping wedge.

أزنق ʕaznaq /el/ more/most narrow or tight.

زناق *zinaaq* /n/ throat latch, throat band (of a horse, donkey etc.).

زناقة *zinaaqa, zannaaqa* /n pl *-aat*/ any of a range of devices for holding something tightly in place or confined (as a tightening nut, a wedge, a mud barrier to check the flow of water in a channel, a halter for holding an animal).

اتزنق ʕitzanaq or ʕizzanaq /vi/ **1** to be squeezed or squeeze oneself (into a confined place etc.). *bi-yḥibb[i] yizziniq fis-sittat fil-ʕutubiis* he likes to press himself up against women in the bus. **2** to be put in or get into a tight spot. *ʕil-mumassiliin lamma yizzinqu bi-ybuṣṣu lil-mulaqqin ʕafaan yilḥaq-hum* when the actors get stuck, they look to the prompter to help them. - ava/iva *mitziniq*.

انزنق ʕinzanaq = ʕitzanaq. - ava/iva *minziniq*.

زنّق *zannaq* = *zanaq*. - vn *tazniiq*; ava/pva *mizannaq*. ¶ *zannaq ʕala* to crowd in on. *sawwaaq il-ʕutubiis zannaq ʕalayya* the bus-driver hemmed me in. *ʃiwayyit ʃubbaan maʃyiin fiʃ-ʃariɛ bi-yzannaqu ʕal-banaat* a group of youths walking in the street crowding the girls. ‖*humma mzannaqiin ʕalayya fil-filuus* they keep me hard-up for money.

تزنيقة *tazniiqa* /n pl *tazaniiq*/ = *zanqa* 1, 2.
اتزنق *ʔitzannaq* or *ʔizzannaq* /vi/ **1** to be made tight. **2** to squeeze oneself (e.g., into a confined place). - ava/iva *mitzannaq*.

ز ن ق و ر

زنقور *zanquur, zanquur* /n pl *zanaqiir, zanaqiir*/ corner, niche.
زنقورة *zanquura, zanquura* = *zanquur*.

ز ن ك

زنك *zink* (also *zing*) <Engl> /n/ zinc.
زنكة *zinka* (also *zinga*) /n pl *-aat*/ **1** zinc plate. **2** vessel of zinc (especially a zinc flower-vase).
مزنّك *mizannik* (also *mizannig*) /adj */ zinc-plated.

ز ن ك غ –

زنكوغراف *zinkuɣraaf* <Engl> /n/ zincography.

ز ن ن

زن *zann (i)* /vi/ **1** to buzz, hum. **2** to whine, nag, pester. *ʔil-wad bi-yzinn[i] miš-ṣubḥ* ≈ the baby's been fretting for ages. *dabbuur zann[a] ɛala xraab ɛiff-u [prov]* (a wasp that brought about the destruction of its own nest through its buzzing) ≈ he asked for it! *ʔiz-zann[a] ɛal-widaan ʔaqwa mis-siḥr [prov]* nagging in the ears is worse (and more effective in achieving its aim) than witchcraft. – /vt/ **3** to give a beating to. *zann-u ɛalqa* he gave him a hard beating. - vn *zann*; ava *zaanin*.
زنّة *zanna* /n pl *-aat*/ hum, buzzing sound. ‖ *ʔabu zanna* one afflicted by ringworm of the scalp.
زنّان *zannaan* /adj */ constantly nagging and pestering.
اتزن *ʔitzann* or *ʔizzann* /vi/ to be given a beating. - iva *mitzann*.

ز ن ن و ب

زنوبة *zannuuba* **1** /n pl *zananiib*/ rubber sandals consisting of a flat sole fastened to the foot by thongs between the toes. **2** /prop n/ nickname for Zaynab.

ز ن ه ا ر

زنهار *zinhaar* <P *zinhâr*> **1** /adv/ erectly, vertically. *waaqif zinhaar* standing upright. **2** /interj/ *[mil, obsol]* attention! beware!

ز ن ه ر

زنهر *zanhar* /vi/ to become flushed, become blood-red. *wiff-a-ha mzanhar min kutr ig-gary* her face is flushed from so much running. - vn *zanhara, tizanhiir*; ava *mizanhar*.

ز ن ه م see ز ي ن [1]: *zen-hum*

ز ن ى

زنى *zana (i)* /vi/ to commit fornication or adultery. ‖*zana fiiha* (1) he committed fornication with her. (2) she is his illegitimate daughter. - vn *zina*; ava *zaani*.
زنى *zina* /n/ fornication, adultery. *ʔibn[i] zina* bastard.
زانى *zaani* /n */ fornicator, adulterer. *ʔiz-zaani yxaaf ɛala mraat-u [prov]* the adulterer worries over (the fidelity of) his wife.
زانية *zanya* /n pl *zawaani*/ fornicatress, adultress, profligate woman. *ya-bn iz-zanya* you son of a whore!
اتزنى *ʔitzana* or *ʔizzana* /vi/ (impersonal) passive of *zana*. *ʔitzana fiiha* someone committed fornication with her. - iva *mitzini*.

ز ه

زه *zeh* /fem n, pl *-aat*/ eleventh letter of the Arabic alphabet. - also *zaay, zeen*.

ز ه ب [1]

ذهب *zahab (a)* /vi/ to go, go away. *ʔiza ḥaḍarit il-malayka zahabit if-ʃayaṭiin [prov]* when angels are present, devils depart. *saaɛit ma ʃaf-ha ɛaql-u zahab* as soon as he saw her he took leave of his senses. ‖*taẓkarit zihaab wi-ʔiyaab* round-trip ticket. - vn *zihaab*; ava *zaahib*.
ذهوب، زهوب *zahuub* /n/ *[slang]* pound (money).
مذهب *mazhab* /n pl *mazaahib*/ **1** method or procedure followed. **2** *[Isl]* orthodox Islamic school of jurisprudence. **3** refrain (of a song). **4** creed, religion.
مذهب *madhab* /n pl *madaahib*/ creed, religion (in contexts of abuse only). *yiḥraq madhab-ak* ≈ damn you! ‖*mif ɛaarif madhab ik-kalb[i] da gaa-na mneen* heaven knows where that bastard came from! - *ʃallaɛ madahib-ha* ≈ he gave her a rough time.

ز ه ب [2] see د ه ب [2]: *zahabi, tazhiib*

ز ه د

زهد *zihid, zahad (a)* /vt/ to lose interest in, be indifferent to. *ʔilli timlik-u l-ʔiid tizhad-u n-nafs [prov]* ≈ what the hand obtains the heart disdains. - vn *zuhd, zahadaan*; ava *zaahid*.
زهد *zuhd* /n/ renunciation (of the world), abstemiousness, asceticism. *ʔiz-zuhd[i] yiḍman lil-ɛabd iṭ-ʃariiq lis-saɛaada l-ʔabadiyya* renunciation (of worldly temptations) guarantees man the way to eternal happiness.
زاهد *zaahid* /n * and pl *zuhhaad*/ abstemious person, ascetic. *ʔid-dinya f-naẓar iz-zaahid ma-tistahil-ʃ ig-gary[i]*

waraaha in the opinion of the ascetic worldly comfort is not worth bothering about.

زهيد *zahiid* /adj/ little, small, low (of price), insignificant.

أزهد *ʔazhad* /el/ **1** more/most abstemious. **2** more/most insignificant.

زهّد *zahhid* /vt/ to cause to lose interest. *nukran-ha lil-gimiil zahhid-ni fiiha* her ingratitude made me go off her. - vn *tazhiid*; ava/pva *mizahhid*.

ازهّد *ʔitzahhid* or *ʔizzahhid* /vi/ to be made to lose interest. - iva *mitzahhid*.

استزهد *ʔistazhid* /vt/ **1** to consider small, little or insignificant. **2** to feel indifferent. **3** to live a life of renunciation of worldly comfort. - ava *mistazhid*.

ز ه ر [1]

زهر *zahr*[1] /n/ **1** /coll/ blossom(s), flower(s). **2** (also *mayyit zahr*) orange-flower water.

زهرة *zahra*[1] /n, pl *zaharaat, zuhuur, ʔazhaar*/ **1** /unit n/ a blossom, a flower. *zuhuur ḫawliyya [hort]* annuals. ‖*zahrit sigaara* the glowing end of a cigarette. - *zaharaat ik-kaʃʃaafa* Brownies, junior Girl Guides. - *maat fi-zahrit ʃabaab-u* he died in the flower of his youth. **2** motif in tent appliqué work (see Pl.H, 8).

زهراية *zahraaya* /unit n/ a blossom, a flower.

زهراء، زهرا *zahraaʔ*: /always def/ *faṭma z-zahraaʔ* epithet of Fatima, the daughter of the Prophet Muhammad.

زهريّة *zuhriyya* /n pl *-aat*/ flower-pot, vase.

الزهرة *ʔiz-zuhara, ʔiz-zuhra* /prop n/ the planet Venus.

زهرى *zuhari, zuhri* /n/ syphilis.

الأزهر *ʔil-ʔazhar* /prop n/ el-Azhar. *gaamiɛ wi-gamɛit il-ʔazhar* el-Azhar Mosque and University.

أزهرى *ʔazhari* **1** /adj/ pertaining to el-Azhar. **2** /n */ graduate of or student at el-Azhar, Azharite.

مزهر *mazhar* /n pl *mazaahir*/ broad shallow tambourine (without jingles).

مزاهرجى *mazahirgi* /n pl *-yya*/ player of the *mazhar*.

مازهر *mazahr* /n/ flower water.

زهّر *zahhar* /vi/ to put forth blossom. *ɛandina mawaaliḥ bi-tibtidi tzahhar* we have citrus trees which are beginning to blossom. - vn *tazhiir*; ava *mizahhar*.

ازدهر *ʔizdahar*↑ /vi/ to prosper, flourish. *ʔit-tigaara zdaharit* trade flourished. - vn *ʔizdihaar*; ava *mizdihir, muzdahir*↑.

ز ه ر [2]

زهر *zahr*[2] /coll n/ blueing (for laundry).

زهرة *zahra*[2] /unit n, pl *-aat*/ blueing (for laundry).

زهرى *zahri* /adj/ light blue.

زهّر *zahhar*[2] /vt/ to blue. *bi-tiʃṭuf il-ɣasiil wi-baɛdeen bi-tzahhar-u* she rinses the laundry and then blues it. - vn *tazhiir*; ava/pva *mizahhar*.

ز ه ر [3]

زهر *zahr*[3] /n/ pig iron, cast iron.

ز ه ر [4]

زهر *zahr*[4] <prob T *zar*> /n/ **1** /coll n/ dice. **2** pair of dice (in backgammon). ‖*maɛalehf*[i] *ya zahr* ≈ you can't always be lucky! win a few lose a few!

زهرة *zahra*[3] /unit n, pl *-aat*/ a die.

ز ه ز ه

زهزه *zahzah, zahzih* /vi/ to shine brightly. *ʔil-ɋamar kaan mizahzah fis-sama* the moon was shining brightly in the sky. ‖ *ʔid-dinya zahzahit-lu* life became rosy for him. - vn *zahzaha, tizahziih*; ava *mizahzah, mizahzih*.

ز ه ق

زهق *zihiq, zuhuq (a)* /vi/ to become fed up. *zihiqt*[i] *min ig-gawaaz wi-ɋaraf ig-gawaaz* I've had enough of the whole disgusting business of marriage. - vn *zahaq, zahaqaan*.

زهقان *zahqaan* /adj */ fed up, bored, exasperated, annoyed.

أزهق *ʔazhaq* /el/ more/most bored, exasperated, etc.

زهّق *zahhaq* /vt/ to cause to be fed up, exasperate. *bi-tfaaṣil li-ɣayit ma tzahhaq il-bayyaaɛ* she haggles to the point of exasperating the vendor. - vn *tazhiiq*; ava/pva *mizahhaq*.

اتزهّق *ʔitzahhaq* or *ʔizzahhaq* /vi/ to be made exasperated. - iva *mitzahhaq*.

ز ه ل

ذهل *zahal (i)* /vt/ to shock, astonish, bewilder, astound. *manẓar yizhil il-ɛuquul* an amazing sight. - /the literary passive perfect frequently occurs/ *ʔana zuhilt*[i] *mil-manẓar* I was stunned by the sight. - vn *zuhuul*; ava *zaahil*; pva *mazhuul*.

انذهل *ʔinzahal* /vi/ to be distracted, be bewildered, be amazed. - iva *minzihil*.

اتذهل *ʔitzahal* or *ʔizzahal* = *ʔinzahal*. - iva *mitzihil*.

ز ه م

زهمة *zahama* /n/ **1** stink, stench. **2** frightening atmosphere. *ʔil-gabbaana bil-leel kaan ɛaleeha zahama* the cemetery in the dark of the night had a horrifying atmosphere about it. - also *zaxama*.

زهامة *zahaama* = *zahama*. - also *zaxaama*.

ز ه ن
ذهن *zihn* /n pl *ʕazhaan*/ mind, brain. *ɛaayiz yinaʃʃaṭ zihn iṭ-ṭaalib* he wants to stimulate the student's mind.
ذهنى *zihni, zuhni* /adj/ mental. *maghuud zihni* mental effort.

ز ه و
زهوة *zahwa↑* /n/ **1** brightness (of colour). **2** zenith, height. *ʕumm¹ kalsuum maatit wi-hiyya f-zahwit ʃuhrit-ha* Umm Kulthum died at the height of her fame.
زاهى *zaahi* /adj/ vivid, bright. *ʕalwaan zahya* bright colours..
أزهى *ʕazha* /el/ brighter/brightest.

ز و
ذو *zu* /nominal, fem (and also masc in unelevated speech) *zaat*, pl *zawi, zawaat↑*; always in constr/ possessor of. *raagil zu ʕahammiyya* an important man. *masʕala mif zaat ʕahammiyya* an unimportant matter. *zawi l-ʕamlaak* property owners. *ḥayawanaat zawaat il-ʕarbaɛ* quadrupeds. *ʕinta mif zaat ʕahammiyya ɛandi↓* you're of no importance to me. ‖*zu l-qiɛda* eleventh month of the Muslim year. - *zu l-ḥigga* twelfth month of the Muslim year. see further under ذ ا ت
zii: kullu zii ɛaahatin gabbaar [prov] every person with a physical defect has a cruel streak.

ز و ا ت see ز ا ت: *zawaat, zawaati*

ز و ب see د و ب ¹: *muziib, muzaab*

ز و ب ع see ز ب ع: *zawbaɛa*

ز و ت ن see also ز ى ت.
زوتن *zootan* /vi/ to turn rancid. - ava *mizootan*.

ز و ج see also ج و ز ²
زوج *zoog↑* /n pl *ʕazwaag*/ husband.
زوجة *zooga* /n pl *zawgaat*/ wife. ‖*taɛaddud iz-zawgaat* polygamy.
زوجى *zawgi* /adj/ **1a** even (of numbers). **1b** pertaining to doubles (in games). *(ʕil-)xaṭṭ iz-zawgi* doubles line (e.g., of a tennis court). **2** marital. *xilafaat zawgiyya* marital disputes.
زوجيّة *zawgiyya* /n/ the state of marriage, matrimony. *beet iz-zawgiyya* marital home.
زيجة *ziiga* /n/ marrying, marriage. *sirr iz-ziiga [Chr]* the sacrament of marriage.
زواج *zawaag* /n/ marriage.
مزواج *mizwaag* /adj invar/ frequently marrying.
زوّج *zawwag* /vt/ to effect the marriage of (s.o.) (to). - ava/iva *mizawwig*.
اتزوّج *ʕitzawwig* or *ʕizzawwig* **1** /vt/ to marry, wed. **2** /vi/ to get married. - ava *mitzawwig*.
مزدوج *muzdawag↑* /adj/ **1** double(d). **2** duplicate. *ʕiṣaal muzdawag* duplicate receipt.

ز و ح see ز ى ح: *zooḥa*

ز و د ¹
زاد *zaad¹* /n/ food, provisions. *qaṭaɛit iz-zaad* she gave up eating. ‖ *ʕiz-zaad wiz-ziwwaad* (or *zuwwaad*) all provisions, as in *xallaṣ ɛaz-zaad wiz-zuwwaad* he finished off everything.
زوّاد *ziwwaad, zuwwaad: ʕiz-zaad wiz-ziwwaad* see *zaad¹*.
زوّادة *zuwwaada, ziwwaada* /n/ provisions taken on long trips (by, e.g., pilgrims to Mecca).
زوّد *zawwid¹* /vt/ to supply, furnish, provide. - vn *tazwiid*; ava/pva *mizawwid, mizawwad*.
اتزوّد *ʕitzawwid* or *ʕizzawwid* /vi/ **1** to provision oneself. **2** to be provided, be supplied (with s.th.). - ava/iva *mitzawwid*.

² ز و د see ز ى د: *ziwaada, zawwid²*

ز و ر ¹
زار *zaar² (u)* **1** /vt/ to visit. *ya baxt¹ min zaar wi-xaffif [prov]* blessed is he who keeps his visits short! **2** /vi/ to visit the tomb of the Prophet (at Medina). - vn *ziyaara*; ava *zaayir*.
زيارة *ziyaara* /n pl *-aat*/ **1** visit. **2** food brought by visitors for their host.
زاير *zaayir* /n * and pl *zuwwaar*/ visitor.
انزار *ʕinzaar¹* /vi/ to be visited. - iva *minzaar*.
اتزار *ʕitzaar* or *ʕizzaar* = *ʕinzaar¹*. - iva *mitzaar*.
زوّر *zawwar¹* /vt/ to show (visitors) round. - vn *tazwiir*; ava *mizawwar*.
اتزوّر *ʕitzawwar¹* or *ʕizzawwar¹* /vi/ to be shown round (of visitors). - iva *mitzawwar*.
اتزاور *ʕitzaawar* or *ʕizzaawar* /vi/ to exchange visits. *baṭṭalu yitzawru maɛa baɛḍ* they stopped visiting each other. - vn *tazaawur*; ava *mitzaawir*.

ز و ر ²
زور *ziwir (a)* /vi/ **1** to choke (on something caught in the throat). *ʕilli yaakul li-waḥd-u yizwar [prov]* who eats alone chokes. **2** to backfire (of a welder's torch). - vn *zawaraan*.
زور *zawar (i)* /vt/ to cause to choke (on s.th. caught in

the throat). *luqma kbiira mil-ɛeef zawarit-u* a big piece of bread has choked him. - vn *zawar, zawaraan*; ava *zaawir*; pva *mazwuur*.

زور *zoor* /n pl *zuwaar, ʃizwaar*/ **1a** throat. ‖*ħaaga mashˈ zoor* a mere nothing, a little bite, just a trifle to keep your appetite at bay (of food). - *ɛalee zoor yiblaɛ iṭ-ṭoor* he is a glutton. - *ma-b-yinzil-fˈ min zoor-i* (or, more emphatically, *ma-b-yinzil-lii-f min zoor*) I can't stand him, I can't stomach him. - *ma-ɛanduu-f ɣeer ɛayyil bi-zoor-u* he only has one child (to feed). **1b** *[butcher]* windpipe and lungs. **2** any of a range of throat-shaped parts (as a piston-casing, narrow part of a tubular drum, connecting-pipe etc.).

زوران *zawraan* /adj */ choking (on s.th. caught in the throat). ‖*geeb-u zawraan* he's very rich.

اتزور *ʃitzawar* or *ʃizzawar* /vi/ to be made to choke. - iva *mitziwir*.

ز و ر ³

زور *zuur* /n/ falsehood. *ʃihaada zuur* false testimony, perjury.

¶ *biz-zuur* (1) by force, as in *wakkiluu-ni biz-zuur* they forced me to eat. (2) with difficulty, as in *ħagaz li-nafs-u tazkara biz-zuur* he could hardly book himself a ticket.

زوّر *zawwarˀ* /vt/ to counterfeit (paper money, documents etc.). - vn *tazwiir*; ava/pva *mizawwar, muzawwar*.

مزوّر *muzawwir* /n */ forger, counterfeiter.

مزوّراتي *mizawwaraati, muzawwaraati* /n pl *-yya*/ forger.

اتزوّر *ʃitzawwarˀ* or *ʃizzawwarˀ* /vi/ to be counterfeited. *ʃil-ʃimḍa tzawwarit bi-ʃiid waaħid ħarriif* the signature has been forged by the hand of an expert. - iva *mitzawwar*.

ز و ر ق

زورق *zooraqˀ* /n pl *zawaariq*/ small boat. *zooraq ṭurbiid* torpedo boat. *zooraq sibaaq* racing boat (as, e.g., an eight, a scull).

ز و ع

زوعة *zooɛa, zuuɛa* /adj invar/ weak, submissive. *ṣaħiiħ ṭuul wi-ɛarḍˈ laakin raagil zooɛa* true he's a gigantic man but it's easy to push him around.

ز و غ

زاغ *zaaɣ (u)* /vi/ to slip away, escape unnoticed. *ħawilt azuuɣ minhum* I tried to give them the slip. ‖*ɛeen-u zayɣa* he has a roving eye. - vn *zawaɣaan*; ava *zaayiɣ*.

زوّغ *zawwaɣ* /vi/ to absent oneself without permission, play truant. *huwwa ʃaħyaanan bi-yzawwaɣ miʃ-fuɣl* sometimes he plays hookey from work. ‖*ma-tzawwaɣ-fˈ min il-mawḍuuɛ* don't try to evade the subject. - vn *tazwiiɣ*; ava *mizawwaɣ*.

مزوّغاتي *mizawwaɣaati* /n pl *-yya*/ truant.

ز و ف ¹

زاف *zaaf (u)* /vt/ to push away, remove. *zafiṭ-u bɛiid* she pushed him away. *zaaf-u guwwa* he pushed him inside. ‖*biz-zoof* plentiful, in great quantity. - *ħoof zoof* hastily, without delay, as in *xad-ni ħoof zoof min ɣeer ma yiʃʃal-ni* he hustled me off without even asking me. - vn *zoof, zawafaan*; ava *zaayif*.

زوفة *zoofa* /unit n, pl *-aat*/ (a single) push.

¶ *biz-zoofa* plentiful, in great quantity. *ʃin-naas ʃkaanit biz-zoofa* people were (present) in great numbers.

اتزاف *ʃitzaaf* or *ʃizzaaf* /vi/ to be pushed away, be removed. - iva *mitzaaf*.

انزاف *ʃinzaaf* = *ʃitzaaf*. - iva *minzaaf*.

(ز و ف) ²

زوف *zoofˈ* /n/ *[rur]* roots and stalks of wheat collected for fuel after harvesting. ‖*zoof il-balad* the scum of the town.

زوف *zoofˀ* /n/ *[bot]* hyssop.

ز و ق ¹

زواق *ziwaaq* /n/ **1** making up, putting on cosmetics. **2** make-up, cosmetics.

زوّق *zawwaq* /vt/ **1** to decorate, ornament. **2** to make up with cosmetics. - vn *tazwiiq*; ava/pva *mizawwaq*.

اتزوّق *ʃitzawwaq* or *ʃizzawwaq* /vi/ **1** to be decorated, be ornamented. *maraakib mitzawwaqa b-ʃaɛlaam* boats decorated with flags. **2** to wear make-up. *ʃil-bintˈ kaanit mizzawwaqa ɛala singit ɛafara* the girl was made-up to kill. - ava/iva *mitzawwaq*.

ز و ق ² see also د و ق ¹

ذوق *zooq* /n pl *ʃazwaaq*/ **1** taste, discrimination. *zooq gamiil* good taste. *zooq-u baladi* he has uncultivated down-to-earth taste. *bintᵃ ɛala zooq-i* a girl to my taste. *ʃin-naas ʃazwaaq* everyone to his own taste. ‖*ʃumm iz-zooq* epithet of Cairo. **2** tact, manners. *ħawiltˈ ʃaxud-ha biz-zooq* I tried to take it politely. ‖*xalli ɛandak zooq* have some consideration! - *kull-ak zooq* (1) ≈ you're too kind (said on receiving a compliment). (2) *[sarc]* what beautiful manners! (said to one using abusive language). - *kull-ak zooq wi-ħinniyya* ≈ thank you (said on receiving a favour).

ذوقيّة *zawqiyya* /n pl *-aat/ = zooq. min baab iz-zawqiyya kaan laazim nizuur-u* for the sake of decency we should have visited him.
ذوقيًا *zawqiyyan* /adv/ as a matter of consideration or decency.
أذوق *ʕazwaq* /el/ **1** more/most elegant or tasteful. **2** more/most polite.
تذوّق *tazawwuqˀ* /n/ (artistic) appreciation.
استذوق *ʕistazwaq* /vi/ to behave politely. -vn *ʕistizwaaq*; ava *mistazwaq*.

ز و ك

زوك *zuuk* /n/ stifle (of a horse).

ز و ل ¹

زال *zaal¹ (u)* /vi/ to cease. *ʕin-niʕma zaalit min wiff-u* God's grace has left him. ‖*zawaal ya dunya* ≈ ashes to ashes. -vn *zawaal, zawalaan*; ava *zaayil*.
زال *zaal² (i)* /vt/ to remove. -vn *zayalaan*; ava *zaayil*.
زوال *zawaal* /n/ **1** noon. *baʕd iz-zawaal* afternoon. ‖*xaṭṭ iz-zawaal* meridian. **2** shadow (of a person). *ʕana faayif zawaal bi-yiṭḥarrak fiḍ-ḍalma* I see something moving the dark.
مزولة *mazwala* /n pl *mazaawil*/ sundial.
زاول *zaawil* /vt/ to practise (a profession), pursue (an interest). *bil-muzawla* by practice. *tarxiiṣ muzawlit il-miḥna* licence to practise the profession. -vn *muzawla, mizawla*; ava *mizaawil*.
أزال *ʕazaal = zaal²*. -vn *ʕizaala*; ava *muziil*.
مزيل *muziil* /n pl *-aat/* remover. *muziil (liṣ-ṣada)* rust remover.

ز و ل ²

زويلة *zuweela: baab zuweela* /prop n/ Bab Zuweila, an old city gate in Cairo.

ز و م

زام *zaam (u)* /vi/ **1** to growl. **2** to utter a mating call (of a male pigeon). -vn *zawamaan, zoom*; ava *zaayim*.

زون see ز و و ا ن: *zawwaana*

ز و و ا ن

زوّانة *zawwaana* <poss T *zıvana* from P> /n pl *-aat/* compass saw.

ز و ى ¹

زوى *zawa (i)* /vt/ **1** to shape into the form of an angle. ‖*zawa ḥawagb-u* he frowned. - *ʕil-ʕiyaal zawyiin-u* the children are harassing him. **2** to put out of sight, hide away. **3** *[text]* to double. -vn *zawy, zawayaan*; ava *zaawi*; pva *mazwi*.
زاوية *zawya* /n pl *-aat, zawaaya, ziwy, ziway↓/* **1a** angle. *zawya ḥadda* acute angle. *zawya qayma* right angle. *zawya munfariga* obtuse angle. **1 b**ˆ aspect. *zawaaya l-baḥs* aspects of the study. **2** a small mosque (without a minaret). — /pl *ziwy* only/ **3** *[carp, eng]* try square. *zawyit kustilla* mitre square.
انزوى *ʕitzawa* or *ʕizzawa* /vi/ **1** to be formed into an angle. **2** to be put out of sight, be hidden away. **3** *[text]* to be doubled. -iva *mitziwi*.
انزوى *ʕinzawa* = *ʕitzawa*. -iva *minziwi*.

ز و ى ²: see ز و *zawi*

ز ى: see ز و *zii*

ز ى ا ك ن: see د ى ا ك ن *ziyaakun*

ز ى ب: see د و ب ¹ *muziib, muzaab*

ز ى ب ق

زيبق، زئبق *zeebaq* /n/ mercury, quicksilver.

ز ى ت

زيت *zeet* /n pl *zuyuut, ziyuut*/ oil. *zeet faʕr* hair-oil. *ziyuut taʃḥiim* lubricating oils. *zeet bizra* cotton-seed oil. *ʕil-qassiis bi-yimsaḥ il-mariiḍ biz-zeet il-muqaddas* the priest anoints the sick man with consecrated oil. ‖*ḥaʃiif zeet* pure hashiish. -*zeet ḥaar* linseed oil. -*zeet ṭayyib* olive oil. - *ʕil-baḥrⁱ zayy iz-zeet* the sea is totally calm. -*zet-hum fi-dqiqhum* in the family, as in *gawwiznaa-ha li-bnᵃ ʕamm-a-ha w-baqa zet-na f-diqiq-na* we gave her in marriage to her cousin and it all stayed in the family.
زيتي *zeeti* /adj */ oil-coloured, dark green.
الزيتيّة *ʕiz-zetiyya* /prop n/ an industrial region near Suez famous for its oil refineries.
زيّات *zayyaat* /n */ *[obsol]* food-oil merchant.
مزيتة *mazyata* /n pl *mazaayit*/ oil-can, oiler.
زيتون *zatuun* /coll n/ **1** olive tree(s). **2** olive(s). see further under ز و ت ن
الزيتون *ʕiz-zatuun* /prop n/ district in north-eastern Cairo.
زيتونة *zatuuna* /unit n, pl *-aat/* **1** an olive tree. **2** an olive.
زيتونية *zatuunaaya = zatuuna*.
زيتوني *zatuuni* /adj invar/ olive-green in colour.
زيّت *zayyit* **1** /vt/ to oil, apply oil to, render oily. **2** /vi/ to become oily, become covered with oil. -vn *tazyiit*; ava/pva *mizayyit*.

اتزيّت ʃitzayyit or ʃizzayyit /vi/ to be oiled, be covered with oil. -iva *mitzayyit*.

زيتون see زيت

زيح

زاح *zaaḥ (i)* /vt/ **1** to shift, displace. *ziiḥ ik-kursi fwayya* move the chair away a bit! *zaaḥ ɤamm-u* it dispelled his gloom. *ziḥt[a] ɛaleehum if-fuɤl* I shifted the work on to them. **2** *[slang]* to gobble up, polish off. *yiziiḥ kull-u* he wolfs down everything (you give him). -vn *zeeḥ, zayaḥaan*; ava *zaayiḥ*.

زيحة *zeeḥa* /inst n/ a displacement. ‖*gat-ak zeeḥa* go to hell!

زوحة *zooḥa* = *zeeḥa*.

انزاح ʃitzaaḥ or ʃizzaaḥ /vt/ **1** to be shifted, be displaced. *ʃahi balwa wi-tzaaḥit* ≈ that's a weight off my shoulders! **2** *[slang]* to be gobbled up, be polished off. -iva *mitzaaḥ*.

انزاح *ʃinzaaḥ* = *ʃitzaaḥ*. -iva *minzaaḥ*.

أزاح *ʃazaaḥ↑* = *zaaḥ*. -vn *ʃizaaḥa*.

زيد

زاد *zaad[2] (i)* /vi/ **1** to increase, grow. *zidt[i] sabɛa kiilu* I put on seven kilos in weight. *ɛadad is-sukkaan bi-yziid kull[i] sana* the population increases every year. *takaliif il-ḥayaah zaadit ɋawi* the cost of living increased greatly. *ḥubb-u liiha bi-yziid maɛa l-ʃayyaam* his love for her grows as time passes. ‖*zaad* or *(faad) wi-ɤaṭṭa* (1) to suffice amply, as in *ʃil-akl[i] zaad wi-ɤaṭṭa* the food was more than enough. (2) to increase out of all bounds, as in *ʃilli zaad wi-ɤaṭṭa l-yomeen dool ʂanɛit ig-gizam il-ḥariimi* what has really expanded and taken over recently is the women's shoe trade. **2** to go beyond. *maṣruuf-u ma-kan-ʃ[i] yziid ɛan gineeh fiʃ-ʃahr* his pocket-money allowance never exceeded one pound a month. *ʃis-sigaara ma-tzid-ʃ[i] ɛan waraɋa titḥiriɋ* a cigarette is nothing more than a piece of paper that burns. *ʃil-ɛeela hiyya g-gawaaz wi-lli yziid ɛalee min xilfa* a family equals marriage plus whatever children may come. ‖ *ʃil-ḥikaaya zayda ɛan ḥadd-a-ha* this thing is going too far. *ʃilli yziid ɛan ḥadd-u yinɋilib li-ḍidd-u [prov]* ≈ whatever goes to extremes becomes counterproductive. — /vt/ **3** to add to. *rabb-i-na yziid-ak min naɛiim-u* may Our Lord add unto you of His blessings! *ziid in-nabi ṣala* bless the Prophet once more! say (the phrase) *ɛaleeh iṣ-ṣalaatu was-salaam* again! *min zaad-ak ziid-u w-xalli wlaad-ak ɛabiid-u [prov]* whoever has been a benefactor for you, be a benefactor to him, and make your children his slaves. -vn *ziyaada*; ava *zaayid*.

زيادة *ziyaada* /n pl *-aat*/ **1a** increase. *niɛmil taḥliil liz-ziyaada fil-ʃintaag* we analyse the increase in production. *la zyaada wala nuqṣaan* no more, no less. **1b** rise, increment. *kull-u-hum mistanniyyiin ziyaada f-murattabat-hum* they are all expecting a rise in their salaries. **2** excess, surplus. *niʃiil iz-ziyadaat illi ʈilɛit* we remove the superfluities which have emerged. *fii malliim ziyaada* there's an extra millime. *biʃ-ʃakl[i] da bi-yɛawwaɋ daxl-u wi-zyaada kamaan* in this way, he does more than make up for his income. ‖*ɋahwa (sukkar) ziyaada* extra-sweet coffee. *-ziyaada ɛan* in excess of, as in *tixiin ziyaada ɛan il-luzuum* too thick. ¶ *bi-zyaada* enough. *bi-zyaada kida* that's enough! *bi-zyaada kalaam* (that's) enough talking! *bi-zyaada ɛaleeha ɋillit il-ḥaya btaɛit-ha di* she's shameless enough as it is.

زايد *zaayid[1]* /adj */ excessive, beyond what is desirable or right. *miʃ ɋaadir ʃalabbi kull[i] ʈalabaat-ik iz-zayda di* I cannot satisfy all these excessive demands of yours. *ʃiz-zaayid ʃaxu n-naaɋiṣ [prov]* ≈ too much is as bad as too little.

زائد *zaaʃid* /prep/ plus, in addition to. *ʃil-murattab zaaʃid il-badalaat* the salary plus allowances. ¶ *zaaʃid ʃinn* /conj/ in addition to the fact that.

زائدة *zayda* /n pl *zawaayid*/ (unwanted) protuberance, outgrowth, unevenness. ‖ *ʃiz-zayda (d-dudiyya) [anat]* the (vermiform) appendix.

أزيد *ʃazyad* /el/ more/most. *ʃil-wagaɛ bi-yibɋa ʃazyad fil-ʃawwil* the pain is greater at first. *ʃana ɛumr-i ma-biɛt[i] b-ʃazyad mit-tasɛiira* I have never sold anything for more than the fixed price.

زيد *zeed* /prop n/ male given name. ‖*zeed wi-ɛbeed* this and that, as in *kunt[i] miʃ ɛaarif ʃanaam wi-b-afakkar fi-zeed wi-ɛibeed* I could not get to sleep and I kept thinking of this and that.

¶ *ʃabu zeed il-hilaali* a warrior hero of folk epic. *ka-ʃinnak ya-bu zeed ma-ɤazeet [prov]* (as though, O Abu Zayd, you had not campaigned) ≈ we might as well not have bothered, our efforts came to nothing. *sikkit ʃabu zeed kull-a-ha masaalik [prov]* (Abu Zayd's way is all clear paths) ≈ you can't keep a good man down.

زوادة *ziwaada* /n pl *-aat*/ **1** increment, rise (in salary). *baɋaa-li sanateen min ɤeer ziwaada* I've been two years without a rise. **2** excess, what is over and above the required amount. *ʈab da ḥaɋɋ-i mazbuuṭ feen baɋa z-ziwaada* ≈ this is my rightful share, but what about that extra (you used to offer me)?

مزاد *mazaad* /n pl *-aat*/ auction. *baaɛit kull[a] ɛaff-a-ha bil-mazaad* she sold off all her furniture by auction.

زوّد *zawwid*[2] /vt/ **1** to augment, increase. *nizawwid il-ʃarq[i] mayya* we give the land more water. ‖*raayiḥ ʃazawwid il-ɛagala* I'm going to get the tyre (more) inflated. - *ʃiz-ẓaahir ʃinni zawwidt-a-ha ḥabbiteen* it seems that I overdid things a bit. **2** to add. *bi-tiṭbux il-firaax wi-bi-tzawwid ɛaleehum malḥ* she cooks the chickens and (then) adds salt to them. - vn *tazwiid*; ava *mizawwid*.

زايد *zaayid*[2] /vi/ to bid (in an auction). *ʃil-mizayda ɛas-samak* bidding for fish. - vn *mizayda*; ava *mizaayid*.

مزايدة *mizayda, muzayda*↑ /n pl *-aat*/ auction.

مزايد *muzaayid*↑ /n */ bidder, outbidder.

اتزايد *ʃitzaayid* or *ʃizzaayid* /vi/ to take part in an auction. - ava *mitzaayid*.

ازداد *ʃizdaad* /vi/ to increase. *ʃil-xuṭuura ẓdaadit* the danger increased. *ʃil-ʃaɛraaq bi-tizdaad* the symptoms are becoming more pronounced. - vn *ʃizdiyaad*; ava *mizdaad*.

استزاد *ʃistazaad (yistaziid, yistazaad*↓*)* /vt/ to ask for more of, look for more of. *niḥibb[i] nistaziid maɛlumaat* we like to get more information. - vn *ʃistizaada*; ava *mustaziid*↑.

ز ى ر[1]

زيّار *zayyaar* /n/ *[naut]* rope attaching the rear end of the tiller to the rudder.

زيّر *zayyar* /vt/ to fasten, attach. - vn *tazyiir*; ava *mizayyar*.

تزييرة *tazyiira* /n pl *-aat, tazayiir/ [obsol]* a black robe formerly worn by middle-class women.

مزيّرة *mizayyara* /prop n/ evil spirit believed to appear in the form of a woman clad in white garb.

اتزيّر *ʃitzayyar* or *ʃizzayyar* /vi/ to put on a *tazyiira*. - ava *mitzayyara*.

ز ى ر[2]

زير *ziir*[1] /n pl *ʃazyaar, ziyaar*/ large handle-less earthenware jar used for storing and filtering water. (see Pl.A, 7). ‖*ʃaadi z-ziir wi-ʃaadi ɤaṭaa* (here is the *ziir* and here is its cover (part of a children's rhyme)) ≈ here is what clinches it! (in presenting proof). - *dawwar iz-ziir ɛala ɤaṭaa lamma ltaqaa* ≈ he met his match. - *kasar ziir waraa* ≈ he said good riddance to him.

مزيرة *mazyara* /n pl *mazaayir*/ cupboard-like stand on which a *ziir* is placed.

ز ى ر[3]

زير *ziir*[2]: *ʃiz-ziir saalim* /prop n/ a hero of popular epic.

ز ى ر[4]

see ز و ر[1]: *ziyaara*

ز ى ر ج

زايرجة *zayirga* <poss P *zâycha*> /n/ table of random letters used in divination. - also *yazirga*.

ز ى ط

زاط *zaaṭ (i)* /vi/ **1** to become uproarious. *ʃil-muẓahra zaaṭit* the demonstration broke into pandemonium. ‖*ʃil-ḥikaaya zaaṭit* the affair got out of hand. **2** to become joyful. - vn *zeeṭa*; ava *zaayiṭ*.

زيطة *zeeṭa* /n/ clamour, uproar. *zeeṭa w-zambaliiṭa* brouhaha. *bi-yiɛmil zeeṭa ɛal-ḥagaat il-ḥayfa* he makes a fuss about trivial things.

زيّط *zayyaṭ* /vi/ to indulge in noisy merriment, make a joyous commotion. - vn *tazyiiṭ*; ava *mizayyaṭ*.

ز ى ع

ذاع *zaaɛ (i)* **1** /vt/ to broadcast, send out, spread abroad (especially by radio or television). *ma-tziɛ-ʃ il-xabar* don't spread the news. **2** /vi/ to become known, be spread abroad. *ṣiiṭ-u zaaɛ* its fame spread. - vn *zayɛaan*; ava *zaayiɛ*.

اتذاع *ʃitzaaɛ* or *ʃizzaaɛ* /vi/ to be broadcast (by radio). - iva *mitzaaɛ*.

انذاع *ʃinzaaɛ* = *ʃitzaaɛ*. - iva *minzaaɛ*.

أذاع *ʃazaaɛ* /vt/ to broadcast (by radio). *maḥaṭṭit ʃizaaɛa* broadcasting station. - vn *ʃizaaɛa*; ava *muziiɛ*; pva *muzaaɛ*.

إذاعة *ʃizaaɛa* /n pl *-aat*/ radio broadcast. ‖*fil-ʃizaaɛa* on the radio.

مذيع *muziiɛ* /n */ announcer, broadcaster.

ز ى ف

زيف *zeef* /n/ affectation.

زيّف *zayyif* /vt/ to counterfeit, forge (particularly money). - vn *tazyiif*; ava *mizayyif*; pva *muzayyaf*.

مزيّف *muzayyif* /n */ forger.

اتزيّف *ʃitzayyif* or *ʃizzayyif* /vi/ to be counterfeited, be forged (of money in particular). - iva *mitzayyif*.

ز ى ق[1]

زيّق *zayyaq*[1] /vi/ to creak. *baab mizayyaq* a creaking door. *sidr-u bi-yzayyaq* his chest wheezes. - vn *tazyiiq*; ava *mizayyaq*.

ز ى ق[2]

زيق *ziiq* /n pl *-aat*/ **1** edge, border. **2** strip.

زيّق *zayyaq*[2] /vt/ to make an edge or border around (s.th.). - vn *tazyiiq*; ava/pva *mizayyaq*.

اتزيّق *ʕitzayyaq* or *ʕizzayaq* /vi/ to be given an edging or border. - iva *mitzayyaq*.

ز ى ل see ز و ل : *muziil*

ز ى ن [1]

زان *zaan*[2] *(i)* /vt/ to adorn (with one's presence). *ʕinta zint il-beet* your presence has adorned the house, your visit is an honour. ‖ *hiyya tziin-u w-huwwa yzin-ha* they are each as bad as the other, they're a good match. - vn *zayanaan*; ava *zaayin*.

زين *zeen*[1] /adj/ **1** good. *kalaam zeen* sound words. *ya zeen iz-zeen* you best of men! *ʕiz-zeen wiʃ-ʃeen* the good and the bad. — /adverbially/ *nibayyin zeen* we read the future well (a gypsy catchword). ‖ *ṣalli ɛaz-zeen* bless the Prophet! **2** pretty, handsome.

زينهم *zen-hum* /prop n/ poor district in southern Cairo on the northern edge of Fustat.

زينة *ziina* /n pl *-aat, ziyan*/ decoration, ornamentation. *ʕil-ɛaql*[i] *ziina* wisdom is an adornment. *lumaḍ ziina* fairy lights.

زيانة *ziyaana* /n/ barbering, the barber's trade. *ʕitɛallim iz-ziyaana f-ruus il-yataama [prov]* (he learnt to barber on the heads of orphans) ≈ the defenceless make the best guinea-pigs.

زيّن *zayyin* /vt/ **1** to adorn, decorate. *bi-yzayyinu l-midan bi-lumaḍ ɛaʃaan il-muulid* they decorate the minarets with lights for the *muulid*. **2** *[rur]* to cut the hair of (s.o.). - vn *tazyiin*; ava/pva *mizayyin*.

مزيّن *mizayyin* **1** /n */ barber, hairdresser for men. *ʕabrad min il-mizayyiniin [prov]* bolder than a barber, cheekier than a barber. *zayy il-mizayyin yidḫak ɛal-ʕaṣlaɛ bi-ṭaqṭaqit il-maqaṣṣ [prov]* like the barber, he fools the bald with the clicking of the scissors (i.e. he deceives him by pretending to go along with him). **2** /adj */ cheeky, bold.

اتزيّن *ʕitzayyin* or *ʕizzayyin* /vi/ **1** to be adorned, be decorated. **2** to be cut (of hair). - iva *mitzayyin*.

ز ى ن [2]

زين *zeen*[2] /fem n, pl *-aat*/ eleventh letter of Arabic alphabet. - also *zaay, zeh*.

ز ى ن ب

زينب *zeenab* /prop n/ female given name. *ʕis-sayyida zeenab* mosque and quarter in the southern part of central Cairo, named after the grand-daughter of the Prophet Muhammad.

ز ى ى see also ء ز ز ا ى and ء ز ز ى ى

زىّ *zayy* /prep/ **1** as, like. *ṭaɛm-a-ha zayy in-niɛnaaɛ* it tastes like mint. *zayy ayyaam zamaan* as in the old days. *zayy*[i] *ɛawayd-ak* as you usually do, as is your habit. *sitt*[i] *zayy*[i] *di* such a woman. ‖ *zayy(-u) zayy* ... (it is) just like, (it is) equal to, as in *zayyu zayy il-qizaaz* it's just like glass, *zayyak zayy*[i] *ɣeer-ak* fair shares for all! **2** such as. *ʕasɛaar il-xuḍaar zayy il-bamya wil-bisilla wil-koosa rtafaɛit qawi* the prices of vegetables such as okra, green peas and zucchini have gone up a lot. *fii duwal qablit-ha l-muʃkila di qabliina zayy iṣ-ṣiin wil-hind* some countries, such as China and India, have encountered this problem before us. **3** about, something like, approximately. *zawwidi ɛalee zayy*[i] *sitt*[i] *beḍaat* add about six eggs to it. *ʕir-rusuum zayy*[i] *xamsa w-sabɛiin qirʃ* the dues are something like seventy-five piastres.

¶ *zayy*[i] *ma* /conj/ **1** as, just as, in the same way as. *win-nabi zayy*[i] *ma b-aquul kida* I swear it's exactly as I say. *ḫ-aɛmil zayy*[i] *ma-na ɛaayiz* I'll do as I please. *niqdar nibiiɛ-u zayy*[i] *ma-ʃtarenaa* we can sell it for the same price we bought it for. ‖ *bi-yquum biiha zayy*[i] *ma ykuun* he takes it on as circumstances permit. - *tiʃrab ʕeeh - zayy*[i] *ma ykuun* 'What'll you drink?' 'Just whatever's around.' **2** as if. *ʕid-duktoor bi-yɛaalig il-marḍa zayy*[i] *ma ykuunu wlaad-u* the doctor treats the patients as if they were his own children. *da zayy*[i] *ma ykuun fii taar benna* it is as though there were a feud between us.

زىّ *ziyy* /n pl *ʕazyaaʕ*/ uniform.

أزياء *ʕazyaaʕ* /pl n/ women's dresses, women's fashions. *ɛarḍ*[i] *ʕazyaaʕ* fashion show.

اتزيّى *ʕitzayya* or *ʕizzayya* /vi/ to dress oneself or be dressed. *ʕitzayya b-ziyy-u l-ɛaskari* he put on his military uniform. - ava/iva *mitzayyi*.

س

س ا ء
ثاء *saaʔ*[1] /fem n, pl *-aat*/ fourth letter of the Arabic alphabet. - also *sih*.

س ا ج
ساج *saag: xaʃab saag* teak wood.

س ا ح
ساحة *saaḥa* /n pl *-aat*/ playground, recreation space, parade ground. ‖*saaḥa ʃaɛbiyya* government-sponsored youth club for military and sports training.

س ا د ا
سادة *saada* <P *sâda*> /adj invar/ plain, simple. *ɋumaaʃ saada* unpatterned cloth. *ʃaay saada* tea without milk. *ɋahwa saada* (Turkish) coffee without sugar. ‖ *ʕis-saada lis-saada [joc]* unsweetened coffee for gentlemen.

س ا ر ى
ساري *saari*[1] <Hindi> /n/ sari.

س ا س
ساس *saas: min is-saas lir-raas* from head to toe, from top to bottom.

س ا ع [1]
ساعة *saaɛa*[1] /n pl *-aat*/ **1a** hour. *b-aʃtaval bis-saaɛa* I work by the hour. **1b** hour of the day. *ʕis-saaɛa kaam* what time is it? *ʕis-saaɛa tnaaʃar* it is twelve o'clock. **2** time, period of time. *miin gayy is-saɛaa-di* who's coming at this hour? *fi-nafs is-saaɛa* at the same time. *mamnuuɛ it-tadxiin saaɛit iʃ-ʃuɣl* no smoking during working time. *saaɛa l-ɋalb-ak wi-saaɛa l-rabb-ak [prov]* (a time for yourself and a time for your Lord) ≈ (there is) a time for pleasure and a time for prayer. ‖*saɛt-u ɋarrabit* his hour is near, he is about to die. *-saaɛit il-ḥaẓẓ*[i] *ma-titɛawwaḍ-ʃ [prov]* you can never make up for lost pleasures. *-kull*[i] *saaɛa wit-tanya* very often, as in *hiyya kull*[i] *saaɛa wit-tanya tkallim-ni bit-tilifoon* she's always ringing me up! - *ʕibn*[i] *saɛt-u* man of whims. *-saɛit-ha* at the same time, as in *faakir lamma kunt*[i] *bi-tdawwar ɛalayya - saɛit-ha baɋa kunt*[i] *fil-maktab* remember the time you were looking for me? well, I was at the office then. *-fi-saɛit-ha* then and there, at once, as in *lamma ḥaṣalit il-ḥadsa f-saɛit-ha gih il-buliiṣ* when the accident occurred the police came at once. **3** timepiece, watch, clock. ‖*saaɛa tawɋitiyya* stop-watch.

¶ *saaɛit ma* /conj/ (1) when(ever), as in *saaɛit ma yṣaffar laha tiigi* when he whistles, she comes. (2) as soon as, the moment, as in *saaɛit ma yiwṣal ʕibɛat-u l-beet* as soon as he arrives send him home. *huwwa kida min saaɛit ma twalad* he's been like that since the moment he was born. *min saaɛit is-sawra ma ɋaamit* from the time the revolution took place.

ساعات *saɛaat* /adv/ sometimes. ‖*saɛaat kitiira* quite often.

ساعاتي *saɛaati* /n pl *-yya*/ watchmaker, watch-repairer.

سواعي *sawaaɛi* /adv/ sometimes.

[2] س ا ع see س ى ع : *saaɛa*[2]

س ا غ
صاغ *saaɣ*[1] <T *sağ*> **1** /adj invar/ *[obsol]* sound, unimpaired; current only in the expressions *saaɣ* (or *saaɣ*) *saliim* (1) A-1 (of health), (2) safe and sound, *ɋirʃ*[i] *saaɣ* one piastre, *ɋirʃeen saaɣ* two piastres. **2** /n pl *saɣaat*/ piastre, piastre coin. *ʕiddii-ni saaɣ* give me a piastre! *ɛaʃara saaɣ* ten piastres.

س ا ق

ساق *saaq*[1] /n pl *siqaan, siqaan/* **1** stem, stalk (of a plant). **2** (human) leg, calf.

س ء ت ك ي

ثوتكيّة *saʃutukiyya* <Gr *theotokia*> /n pl *-aat/ [Chr]* hymn to the Virgin Mary.

س ء ل

سأل *saʃal (a)* **1** /vt/ to question, ask. *ruuḥ ʃisʃal-u* go and ask him. *kunt*[i] *bidd-i ʃasʃal-ak ḥaaga* I wanted to ask you something. **2** /vi/ to make inquiries. *waaḥid kaan bi-yisʃal ɛaleek* (or *ɛannak*) someone was asking about you. - vn *suʃaal, suʃlaan*; ava *saaʃil*; pva *masʃuul.*

¶ *saʃal fi-* /usu in neg contexts/ to be concerned about. *ma-b-yisʃal-f*[i] *fiyya* he doesn't give a damn about me. *ʃihmil-u wala tisʃal fii* ignore him and don't bother about him at all.

سؤال *suʃaal* **1** /n/ begging. ‖*ḥumart-ak il-ɛarga wala suʃaal il-laʃiim [prov]* ≈ better to depend on your limited resources than to ask for the help of a mean man. **2** /n pl *ʃasʃila, suʃalaat*↓/ question, query. ‖*ʃil-gawaab ɛala ɋadd is-suʃaal* the answer should match the question (i.e. be brief, don't be longwinded).

سئيل *saʃiil* /adj pl *suʃala/* **1** importunate. **2** cheeky. **3** thick-skinned.

سائل *saaʃil*[1]↑ /n */ beggar.

مسؤول *masʃuul* /adj */ **1** responsible, accountable. *ʃana masʃuul ɛan il-ḥikaaya di* I am responsible for this matter. *ʃil-ɛanaaṣir il-masʃuula ɛan nagaḥ-ha* the factors responsible for its success. **2** responsible, in charge. *miin if-ʃaxṣ il-masʃuul hina* who's the person in charge here? *ʃil-masʃuliin miʃ mafruuḍ yiddaxxalu f-kull*[i] *ṣ-ṣayyara wi-kbiira* the authorities shouldn't have to deal with all the petty details.

مسؤوليّة *masʃuliyya* /n pl *-aat/* responsibility.

سؤل *suʃl*↑ /n/ wish. *ʃaḥmid-ak ya rabb*[i] *nawwilt-i-ni ṣuʃl-i* O Lord! praise be to Thee for fulfilling my wish.

مسألة *masʃala* /n pl *masaaʃil/* **1** issue, question, matter. *ʃin-naṣr*[i] *masʃalit waɋt* victory is a question of time. *laazim ninaaɋiʃ il-masʃala di b-huduuʃ* we must discuss this matter quietly. **2** *[math]* problem.

اتسأل *ʃitsaʃal* or *ʃissaʃal* **1** /vi/ to be asked (of a question). *da s-suʃaal illi mafruuḍ yitsiʃil* that is the question that should be asked. **2** /vt/ to be asked (a question). *fil-igtimaaɋ ʃitsaʃal suʃaal muḥrig* in the meeting he was asked an embarrassing question. - iva *mitsiʃil.*

انسأل *ʃinsaʃal* = *ʃitsaʃal.* - iva *minsiʃil.*

ساءل *saaʃil*[2] /vt/ to question. *la tsaʃil-ni wala ʃasaʃl-ak* we shouldn't question each other. - vn *misaʃla, musaʃla.*

اتساءل *ʃitsaaʃil* or *ʃissaaʃil* /vi/ to wonder, ask oneself. *ʃana b-atsaaʃil ʃeeh illi ɛamalt-u fiik* I am at a loss to know what I have done against you. - ava *mitsaaʃil.*

س ء م

سئم *siʃim (a)* /vi/ to become weary, bored, or tired. *ʃana sʃimt*[i] *min ṭuul intiẓaar-u* I am fed up with waiting for him for so long. - vn *saʃam, saʃaama.*

سأم *saʃam (i)* /vt/ to bore, weary, make fed up. - ava *saaʃim.*

سآمة *saʃaama* /n/ tediousness.

سأمان *saʃmaan* /adj */ fed up, weary, tired, bored, exasperated.

اتسأم *ʃitsaʃam* or *ʃissaʃam* /vi/ **1** to be bored, be wearied, be made fed up. **2** (impersonal) passive of *siʃim. ma-yitsiʃim-f*[i] *minnu* no one could be bored by him. - iva *mitsiʃim.*

س ب ا ط

سباطة *subaaṭa* <prob Copt> /n pl *-aat, sabaayiṭ/* cluster, bunch (of dates or bananas). - also *zubaaṭa.*

س ب ا ن خ

سبانخ *sabaanix* <P *sipânâkh*> /n/ spinach.

س ب ب [1]

سبب *sabab* /n pl *ʃasbaab/* cause, reason. *ʃid-diḥk min ɣeer sabab ɋillit ʃadab* to laugh without good reason is impolite. *bi-sabab* on account of, owing to.

سبّابة *sabbaaba* /n pl *-aat/* index finger.

سبّوبة *sabbuuba* /n/ *[slang]* business of a peddler, goods carried by a peddler.

سبّيب *sabbiib* /n pl *sabiiba/ [slang]* peddler.

سبّب *sabbib* /vt/ to cause. *ʃis-surɛa bi-tsabbib muɛẓam il-ḥawaadis* speed causes most accidents. *rabb-i-na bi-ysabbib il-ʃasbaab [prov]* God creates causes (so that man can see an order in things, though God is not bound by cause and effect). - vn *tasbiib*; ava *misabbib.*

مسبّبات *musabbibaat* /pl n/ underlying factors. *ʃil-mawḍuuɛ luu ʃasbaab wi-msabbibaat kitiira* the matter is very complex.

اتسبّب *ʃitsabbib* or *ʃissabbib* /vi/ **1** to be the reason, be the cause. *ʃeeh illi tsabbib fil-ɛaya* what was the cause of the illness? **2** to be caused. *ʃil-ɛaya tsabbib ɛan il-ʃakl il-wisix* the illness was caused by dirty food. **3** to earn one's living (especially by hawking goods in the street). *daayir ṭuul in-nahaar yissabbib-lu fi-ʃwayyit xuḍaar* he

goes around all day hawking vegetables to make a living. - ava/iva *mitsabbib*.

متسبّب *mitsabbib* or *missabbib* /n */ one who trades on a very small scale, peddler.

س ب ب ²

سبّ *sabb¹ (i)* **1** /vt/ to revile, abuse. *raaḥ sabib-li d-diin* he went and insulted my religion. ‖ *masbuuba fii* (she is) accused of committing adultery with him. **2** /vi/ to be abusive, be insulting. *huwwa-nta bi-tsibb¹ f-baaba kamaan* you dare to insult Father as well? ‖ *ʕin ʃuft-u bi-ysibb iɛraf ʕinnu bi-yḥibb [prov]* ≈ he must be in love to act so touchily. - vn *sabb*; ava *saabib*; pva *masbuub*.

سبّ *sabb²* /n/ defamation. ‖ *ʕis-sabb il-ɛalani [leg]* slander, defamation of character. - *qanuun is-sabb* libel law.

سبّة *subba* /n/ object of shame, disgrace or dishonour. *xallit-u subba ɋuddaam in-naas* she disgraced him in public. - /adjectivally/ *da raagil subba* the man's a disgrace!

مسبّة *masabba* = *sabb²*.

اتسبّ *ʕitsabb* or *ʕissabb* /vi/ to be abused, be reviled, be insulted. - iva *mitsabb*.

انسبّ *ʕinsabb* = *ʕitsabb*. - iva *minsabb*.

س ب ب و ت

سبّوتة *sabbuuta* <perh Sp *sapote*> /n/ **1** avocado tree. **2** avocado fruit.

س ب ت ¹

ثبت *sibit (a)* /vi/ **1a** to become immobile, stay in place. *ʕisbat fi-makaan-ak* stay where you are! **1b** to remain steadfast. *sibit fi-kalaam-u* he kept to what he said, he stood by his words. ‖ *ʕamlaak wi-ʕamwaal sabta [leg]* real estate, immovable property. - *fi-muntaha s-sabaat* as calm(ly) as can be. **2** to become set or fixed. *ʕil-buqɛa sibtit* the stain has set. *ʕalwaan sabta* fast colours. *ma-luu-ʃ raʕy¹ saabit* he has no fixed opinion. **3** to be proved. *ʕil-ɋaḍiyya sibtit ɛalee* the case was proved against him. - vn *subuut, sabaat, sabataan*; ava *saabit*.

ثبت *sabat¹ (i)* /vt/ **1** to prove. *ʕana mustaɛidd asbit kalaam-i* I'm ready to prove what I say. **2** to record, make a note of. *bi-yiddii-k waṣl¹ w-yisbit-u fid-daftar* he gives you a receipt and records it in the notebook. — /vi/ **3** to be established, be verified. *sabat-lina ʕinn il-ḥamaas li-waḥd-u mif kifaaya* it was proved to us that enthusiasm alone is not enough. ‖ *subuut ir-ruʕya* confirmation of the sighting of the new moon marking the beginning of a lunar month, particularly Ramadan. - vn *subuut*; ava *saabit*; pva *masbuut*.

ثبات *sabaat* /n/ *[athl]* standing position. *rama l-ɋurṣ¹ min is-sabaat* he threw the discus from a standing position.

ثابت *saabit* /interj/ *[mil, athl]* as you are!

تبت *tibit* /adj * and pl *tubata*/ tenacious, cheeky, insolent, obstinate.

أثبت *ʕaṣbat¹* /el/ more/most reliable, firm, steady etc.

أتبت *ʕatbat* /el/ more/most cheeky, insolent etc.

تبات *tabaat: ɛaaʃu f-tabaat wi-nabaat* ≈ they lived happily ever after.

تباتة *tabaata* /n/ obstinacy, insolence, intransigence.

تبيت *tabiit* /adj pl *tubata*/ = *tibit*.

ثبّت *sabbit* /vt/ **1** to fix, fasten. *sabbit il-ʕiɛlaan ɛala l-ḥeeṭa* he fastened the poster to the wall. **2a** to stabilize, make firm. *bi-nsabbit iʃ-ʃaɛr¹ b-binas* we clip the hair in place. *gihaaz bi-ysabbit ik-kahraba* an apparatus which stabilizes the electricity. *sabbit ʕiid-ak* steady your hand! ‖ *sirr it-tasbiit [Chr]* sacrament of confirmation. **2b** *[admin]* to hire on a permanent basis (after a probationary period). *baɛd¹ sana l-mudiir sabbit-ni fiʃ-ʃuɤl* after a year the director made my appointment permanent. — /vi/ **3** to provide evidence, establish validity. *tiqdar tisabbit ɛak-kalam-da* can you establish the truthfulness of what has been said? - vn *tasbiit*; ava/pva *misabbit*.

تبّت *tabbit* **1** /vt/ to fix tightly, tighten. *tabbit ʕiid-ak ɛal-ligaam* tighten your grip on the reins. **2** /vi/ **2a** to behave assiduously or tenaciously. *tabbit ɛalayya ɛaʃaan ʕazuur-u* he insisted on my visiting him. *tabbitu ɛad-duruus ɋabl il-imtiḥaan* they studied hard before the exam. **2b** to ensure firmness or secure fastening. *tabbitit ɛal-xiyaaṭa* she reinforced the stitching. ‖ *tabbit fiyya* hold on to me tightly! - vn *tatbiit*; ava/pva *mitabbit*.

مثبّت *misabbit, musabbit* /n pl *-aat*/ fixing fluid.

اتثبّت *ʕitsabbit* or *ʕissabbit* /vi/ **1** to be fastened. *ʕil-ʕadawaat bi-tissabbit bi-masamiir* the fixtures are fastened on with nails. **2a** to stabilize, firm up, be stabilized, be firmed up. *ʕil-ḥaraara ssabbitit ɛala daraga muɛayyana* the temperature was stabilized at a specific level. *ʕis-samaar yissabbit fi-baɛḍ-u* the rushes are drawn up tightly together. **2b** to be hired on a permanent basis (after a probationary period). **3** to ascertain the truth. *ʕana tsabbitt¹ min ik-kalaam illi tqaal* I verified what was said. *ruuḥ issabbit minnu* go and find out the truth from him. - ava/iva *mitsabbit*.

اتّبت *ʕittabbit* /vi/ passive of *tabbit*. - iva *mittabbit*.

أثبت *ʕasbat²* /vt/ to prove. *ʕana ʕasbatt-i-lak bid-daliil il-qaaṭiɛ ʕinn¹ huwwa lli ɋaal* I proved to you incon-

trovertibly that he's the one who said (that). -vn *ʔisbaat*.
إثبات *ʔisbaat* /n pl *-aat*/ proof. ‖*muzakkirit ʔisbaat ḥaala* official complaint lodged with police. *-ʃaahid ʔisbaat* witness for the prosecution.

[2] س ب ت
سبت *sabt* (also *yoom sabt*) /n pl *subúta, sibíta, subuuta*/ a Saturday. *ʔis-sabt* or *yoom is-sabt* Saturday. ‖ *ʔis-sabt[i] sabbuut* ≈ Saturday is grim (part of a children's rhyme about the days of the week - Saturday, as the first day of the working week, has the same significance in Egypt as blue Monday does in the West). ‖*min qaddim is-sabt[i] laqa l-ḥadd[i] quddaamu [prov]* ≈ he who does good on Saturday will find his reward on Sunday. *-sabt in-nuur [Chr]* Holy Saturday.
سبّوت *sabbuut: ʔis-sabt[i] sabbuut* see *sabt*.

[3] (س ب ت)
سبت *sabat*[2] <P *sapad*> /n pl *ʔisbita, sibíta*/ basket woven of split cane, (loosely) any stiff straight-sided basket. ‖ *sabat mayya* basket containing a vessel of water for flowers.
السبتيّة *ʔis-sabtiyya* /prop n/ quarter in Northern Cairo. ‖*faar is-sabtiyya* a large mouse or rat which, it is humorously claimed, is responsible for frequent cuts in the Cairo electricity supply.

[4] س ب ت see س ب ب و ت : *sabbuuta*

س ب ت م –
سبتمبر *sibtimbir, sibtimbar* <Engl> /n/ September.

[1] س ب ح
سبحة *sibḥa* /n pl *sibaḥ*/ 1 prayer beads, rosary, worry beads. ‖*ɛas-sibḥa* numerously, as in *yilɛan ʔabuu-k ɛas-sibḥa* damn your father several times over! 2 *[naut]* lifeline.
سبحان *subḥaan* or *subḥaan: subḥaan allaah* (1) praise be to God (formula used in prayer). (2) (also *subḥaan-ak ya rabb*) God be praised! (exclamation of wonder). ‖*subḥaan allaah ɛaleek* (or *fi-ṭabɛ-ak*) ≈ Good Lord! is that any way to behave? *-subḥaan-u wa-taɛaala* may He be praised, (formula used after the mentioning of God's name as a sign of absolute submission), as in *ʔallaah subḥaan-u wa-taɛaala ʔamar bir-raḥma* God, may He be praised, commanded the showing of mercy.
سبّوح *subbuuḥ* /n/ Most Glorious One (epithet of God).
مسبحة *masbaḥa* /n pl *masaabiḥ*/ = *sibḥa*.
سبّح *sabbaḥ* 1 /vt/ to praise God. 2 /vi/ to say or repeat *subḥaan allaah. bi-ysabbaḥ ɛas-sibḥa* he says *subḥaan allaah* while passing the prayer beads through his fingers. ‖*bi-ysabbaḥ bi-ḥamd il-mudiir [deris]* he is always singing the praise of the director. -vn *tasbiiḥ*; ava *misabbaḥ*.
تسبيح *tasbiiḥ* /n pl *tasabiiḥ*/ glorification of God by exclaiming *subḥaan allaah*.
تسبيحة *tasbiiḥa* /pl *-aat*/ instance noun of *tasbiiḥ*.
تسبحة *tasbiḥa* /n pl *tasabiiḥ*/ *[Chr]* collection of liturgical hymns of praise.
اتسبّح *ʔitsabbaḥ* or *ʔissabaḥ* /vi/ to be praised, be glorified (of God). -iva *mitsabbaḥ*.

[2] س ب ح
سبح *sabaḥ (a)* /vi/ 1 to seep. *ʔil-mayya sabaḥit min taḥt il-baab* the water seeped in under the door. 2 to crawl (of insects). *ʔil-baqq[i] saabiḥ ɛal-ḥeeṭa* bedbugs are crawling on the wall. 3↑ to swim. ‖*dayman yisbaḥ fi-ʔafkaar-u* he is always lost in thought. *-saabiḥ fi-ɛaraq-u mil-ḥarr* he is dripping with sweat because of the heat. *-ḥ-aqṭaɛ sabḥ-u* I'll ruin him. -vn *sabḥ, sibaaḥa*; ava *saabiḥ*.
سباحة *sibaaḥa* /n/ swimming. *ḥammaam sibaaḥa* swimming pool.
سبّاح *sabbaaḥ* /n */ swimmer.

[3] س ب ح
سبح *sibaḥ* /interj/ ≈ get him! (said to incite a dog against someone).

س ب خ
سبخ *sabax* /n/ salt and other chemicals that prevent agricultural land from growing plants. *ʔarḍ[i] sabax* agricultural land that has been damaged by chemicals.
سباخ *sibaax* /n/ fertilizer. *sibaax baladi* manure, dung used as fertilizer. *sibaax kimaawi* chemical fertilizer.
سبّخ *sabbax* 1 /vt/ to fertilize, enrich. *nisabbax il-ʔarḍ[i] bi-sbaax baladi* we fertilize the soil with manure. ‖ *ʔana ḥ-asabbax-u ɛala lli ɛamal-u fiik* I will give him a talking to for what he's done to you. 2 /vi/ to become sterile owing to the presence of chemicals or salts (of land). *ʔil-ʔarḍ[i] sabbaxit wi-ɛayza ɛlaag* the soil has become unproductive and needs treatment. - vn *tasbiix*; ava/pva *misabbax*.
تسبيخة *tasbiixa* /n pl *-aat*/ instance noun of *tasbiix*.
اتسبّخ *ʔitsabbax* or *ʔissabbax* /vi/ to be fertilized, be enriched. -iva *mitsabbax*.

س ب د اج
سبيداج *sibidaag* <P *safedâj*> /n/ white lead. - also *ʃisbidaag*.

س ب ر
سبّورة *sabbuura, sabbuura* /n pl *-aat, sababiir*/ blackboard.

س ب ر ت و
سبرتو *sibirtu, sibartu* <It *spirito*> /n/ alcohol, (methylated) spirit. *sibirtu ʃabyaḍ* surgical spirit, rubbing alcohol. *sibirtu ʃaḥmar* methylated spirits.
سبرتاية *sibirtaaya* /n pl *-aat*/ **1** can with a long spout used to feed methylated spirits to primus stoves. **2** alcohol burner.

س ب ر س
سبارس *sabaaris* /coll n/ cigarette butts gathered from the street etc. for re-use.
سبرساية *sibirsaaya* /unit n, pl *-aat*/ a cigarette butt.
سبارسجي *sabarsagi* /n pl *-yya*/ gatherer of discarded cigarette butts.
سبرس *sabras* /vi/ *[joc]* to smoke cigarette butts. - vn *sabrasa*; ava *misabras*.

س ب س ب [1]
سبسب *sabsib*[1] /vt/ to take great pains with (one's hair). - vn *sabsaba*; ava/pva *misabsib*.
اتسبسب *ʃitsabsib* or *ʃissabsib* /vi/ to be overdone, be elaborately coiffed (of hair). - vn *tisabsiib*, ava *mitsabsib*.

س ب س ب [2]
سبسب *sabsib*[2] /vi/ to flow, stream. *ʕenee sabsibit bid-dumuuʕ* or *ʃid-dumuuʕ sabsibit min ʕenee* ≈ he shed tears. - vn *sabsaba*; ava *misabsib*.

س ب س ب [3]
سبسب *sibsib* /n pl *sabaasib*/ small bamboo flute, pitched higher than the *naay*.
سباسب *sabaasib: ʃis-sabaasib il-kubra [magic]* collection of incantations pronounced against evil spirits.

س ب ط [1]
سبط *sibṭ* /n pl *ʃasbaaṭ*/ grandchild. ‖ *ʃasbaaṭ in-nabi* the Prophet's descendants. - *ʃil-ʃasbaaṭ* the twelve tribes of Israel.

س ب ط [2] see س ب ا ط : *subaaṭa*

س ب ع [1]
سبعة *sabʕa* /num: in absol state, in apposition, or w foll n sing in contexts of ordering and itemizing; pl *-aat*/ seven. *sabʕa w-ʕiʃriin* twenty-seven. *sabʕa saax* seven piastres. *sabʕa ʃaay* seven teas. ‖ *ʃibn*[1] (or *bint*[1]) *sabʕa* (1) a baby born two months prematurely. (2) a person of highly-strung nervous temperament (characteristics said to be typical of those born prematurely). - *ʃis-sabʕa w-dimmit-ha* (or *w-timmit-ha*) every conceivable evil, as in *ʈallaʕu fii ʃis-sabʕa w-dimmit-ha* they dragged up every bad thing they could say about him, *ʕamal is-sabʕa w-dimmit-ha* he left no sin uncommitted. - *ʃis-sabʕa* the seven different ways of reading the Koran. *bi-yiqra (l-qurʃaan) bis-sabʕa* he recites the Koran in the seven ways (a sign of great accomplishment).
سبع *sabaʕ* /num; in const w foll n pl; usu *sabaʕt* when followed by n ordinarily w initial hamza/ seven. *sabaʕ daqaayiq* seven minutes. *sabaʕt iyyaam* seven days. ‖ *buloofar bi-yaaqa sabʕa* V-necked sweater. - *sabaʕ ṣanaayiʕ f-ʃidee wil-ḥamm*[a] *ḥaaṭiṭ ʕalee [prov]* he has everything going for him but luck. - *ʃis-sabaʕ banaat* the Sisters of Charity.
سباعي *subaaʕi* /adj/ consisting of seven parts.
سبوع *subuuʕ* /n/ ceremony marking the seventh day after the birth of a child.
السبوعات *ʃis-subuʕaat* /n/ Jewish Pentecost, Feast of Weeks.
أسبوع *ʃusbuuʕ, ʃasbuuʕ* /n pl *ʃasabiiʕ*/ week. *ʃusbuuʕ il-ʃalaam [Chr]* Holy Week.
أسبوعي *ʃusbuuʕi, ʃasbuuʕi* /adj/ weekly. *ʕamra ʃusbuʕiyya* a weekly overhaul.
سبعتاشر، سبعة عشر *sabaʕtaafar* **1** /num pl *-aat*/ seventeen. **2** *ʃil-sabaʕtaafar* /adj invar/ the seventeenth.
سبعين *sabʕiin* **1** /num pl *-aat*/ seventy. ‖ *ʃibn*[i] *sittiin fi-sabʕiin* see *sittiin*. **2** *ʃis-sabʕiin* /adj invar/ the seventieth.
سبعمية، سبعمائة *subʕumiyya* **1** /num/ seven hundred. **2** *ʃis-sabʕiin* /adj invar/ the seven-hundredth.
سابع *saabiʕ* /adj/ seventh. ‖ *min saabiʕ sama l-saabiʕ ʃarḍ* from very high up to very low down. - *saabiʕ nooma* a very deep sleep. - *ʃin-nabi waṣṣa ʕala saabiʕ gaar [prov]* ≈ the Prophet said we should care for even our most distant neighbours.
سبّع *sabbaʕ* /vi/ **1** to make seven. **2** to complete seven days. *ʃil-mawluud sabbaʕ* the baby is seven days old. - vn *tasbiiʕ*; ava *misabbaʕ*.

س ب ع [2]
سبع *sabʕ* /n pl *subúʕa, subuuʕ, sibaaʕ*/ lion. ‖ *raagil sabʕ* a real man! - *ya sabʕ-i*[i] epithet a woman gives her

husband when mourning him. - *geeb is-sabɛ' ma-yixlaaʃ [prov]* (a lion always has plenty) ≈ a gallant person can always find means to assist others. - *sabɛ' walla ḍabɛ* (is it a lion or a hyena) ≈ success or failure? - *ħagar daayir wala sabɛ' naayim [prov]* (better a rolling stone than a sleeping lion) ≈ a working nobody is better than idle nobility. - *zahra kaff is-sabɛ* motif used in tent appliqué work (see Pl.H, 26).

[1] س ب غ

صبغ *sabaɣ (also ṣabaɣ) (u)* /vt/ **1** to dye. **2** to have dyed. - vn *sibaaɣa, sabɣ*; ava *saabiɣ*; pva *masbuuɣ*.

صبغة *sabɣa* (also *ṣabɣa*) /n pl *-aat*/ dye, dye-stuff. ‖*fuuṭit is-sabɣa* nylon napkin used by hairdressers to protect customers' clothes from dye.

مصبغة *masbaɣa* (also *maṣbaɣa*) /n pl *masaabiɣ*/ **1** dye-works, dye factory. **2** dry-cleaning establishment.

اتصبغ *ʔitsabaɣ* or *ʔissabaɣ* (also *ʔiṭṣabaɣ*) /vi/ to be dyed. ‖ *ʔitsibiɣ fin-niila↓ [women]* go to hell! - *di tsabaɣit miz-zaɛal wi-xassit in-nuṣṣ* she's become gloomy and wasted away with grief. - iva *mitsibiɣ*.

انصبغ *ʔinsabaɣ* = *ʔitsabaɣ*. - iva *minsibiɣ*.

[2] س ب غ

سابغ *saabiɣ↑* /adj pl *sawaabiɣ*/ full, complete, abundant (notably of God's grace). *ʔiʃ-ʃukr' li-llaah ɛala niɛam-u s-saabiɣa* thanks and praise be to God for His ample grace.

أسبغ *ʔasbaɣ↑* /vt/ **1** to bestow grace and favour upon, be bountiful towards (s.o., especially of God). **2** *[Isl]* to perform (the ritual ablution) correctly. - vn *ʔisbaaɣ*; ava *musbiɣ*.

س ب ق

سبق *sabaq' (a)* /vt/ **1** to precede, go before. *ʔil-xuṭuuba b-tisbaq ɛaqd il-ʔikliil* the betrothal precedes the church wedding. *kaan sabiq-ni fil-madrasa b-sana* he was a year ahead of me in school. ‖ *ʔil-kaff is-saabiq saabiq [prov]* ≈ the first blow has the advantage. - *sabq il-ʔiṣraar [leg]* premeditation. *qatl[a] ɛamd' maɛa sabq il-ʔiṣraar [leg]* premeditated murder, first degree murder. - *xeer-ak saabiq* ≈ your good deed came first, so you are the one who should be thanked (a modest reply to an expression of thanks). **2** overtake, outstrip. ‖*ɛallimnaa f-fiħaata sabaq-na ɛal-ʔabwaab [prov]* (we taught him to beg, and he beat us to the doors) ≈ he bites the hand that fed him. - *ḍarab-ni w-baka w-sabaq-ni wi-ʃtaka [prov]* ≈ he wronged me and claimed he was wronged. - *ʔilli sabaq kal in-nabaq [prov]* ≈ the early bird catches the worm. - *saabiq fiih iʃ-ʃiṭaan* the devil got there (i.e. to the mother) first, he is a very son of the devil. — /invar/ **3** modal indicating precedence in time. *sabaq qult-i-lak ma-tgii-ʃ hina* I've told you before not to come here. - vn *sabq, sabaqaan*; ava *saabiq*; pva *masbuuq*.

سابق *saabiq'* /adj */ former, previous. *ʔir-raʔiis is-saabiq* the ex-president.

¶ *saabiqan↑, saabiqan* /adv/ formerly, previously.

سابقة *sabqa* /n pl *sawaabiq*/ **1** precedent. *ʔil-mawḍuuɛ da lii sabqa ɛandina fiʃ-ʃirka* this matter has a precedent in our firm. **2** *[leg]* previous criminal conviction. *ʔarbaab is-sawaabiq* previous offenders. *mara* (or *raagil*) *ʔarbaab sawaabiq* a woman (or man) of the criminal sort.

سبق *sabaq'* /n/ **1** competition, contest. **2** race. *ħuṣaan sabaq* racehorse. *ʔis-sabaq* the races.

أسبق *ʔasbaq* /el/ earlier/earliest, former/first.

أسبقيّة *ʔasbaqiyya* /n pl *-aat*/ priority, seniority. *ʔiʃ-ʃira ħasab ʔasbaqiyyit il-ħagz* purchasing orders are fulfilled in the order in which they are placed.

سبّق *sabbaq* /vi/ to act before, ahead or in advance. - vn *tasbiiq*; ava *misabbaq*.

مسبّقًا *musabbaqan* /adv/ in advance.

سابق *saabiq'* /vt/ to race against, compete with. *miin yisabiq-ni fil-ɛoom* who wants to race me at swimming? - vn *sibaaq, musabqa, misabqa*; ava *misaabiq*.

سباق *sibaaq* /n pl *-aat*/ **1** competition, contest. **2** race.

مسابقة *musabqa* /n pl *-aat*/ **1** competition, contest. *ʔimtiħaan musabqa* a competitive examination. **2** race.

اتسابق *ʔitsaabiq* or *ʔissaabiq* /vi/ to compete (with o.a.). - ava *mitsaabiq*.

متسابق *mutasaabiq↑* /n */ competitor, contestant.

س ب ك

سبك *sabak (u)* /vt/ **1** *[metal]* to cast, found. **2** to plan meticulously. *kidba masbuuka* a well thought-out lie. - vn *sabk, sibaaka, sabakaan*; ava *saabik*; pva *masbuuk*.

سبيكة *sabiika* /n pl *sabaayik*/ **1** ingot (of gold or silver). **2** alloy.

سبّاك *sabbaak* /n */ **1** plumber (particularized as *sabbaak ṣiħħi*). **2** metal founder (particularized as *sabbaak maɛaadin*).

مسبك *masbak* /n pl *masaabik*/ foundry.

اتسبك *ʔitsabak* or *ʔissabak* /vi/ **1** *[metal]* to be cast, be founded. **2** to be well-planned. - iva *mitsibik*.

انسبك *ʔinsabak* = *ʔitsabak*. - iva *minsibik*.

سبّك *sabbik* /vt/ **1** to do (s.th.) well. *sabbik il-ɛamaliyya* he organized the job well. **2** *[cook]* to reduce, cook in concentrated stock, juice or sauce.

‖ *ʃil-misabbik wil-miħabbik* elaborately cooked food. - vn *tasbiik*; ava/pva *misabbik*.
تسبيكة *tasbiika* /n/ a dish cooked in concentrated stock, juice or sauce.
اتسبّك *ʃitsabbik* or *ʃissabik* /vi/ passive of *sabbik*. - iva *mitsabbik*.

س ب ل [1]
سبيل *sabiil* /n/ **1**↑ /pl *subul*/ way, path. - common in unelevated speech in the phrases: *ʕaabir sabiil* a passer-by. *raaħ li-ħaal sabiil-u* he went his own way. *ʃasxam wi-ʃaqall[i] sabiil* a far worse path to follow, a far worse course, as in *ʃil-ɣina wiħif wil-faqr[i] ʃasxam wi-ʃaqall[i] sabiil* wealth is bad but poverty is far worse. *ʕala sabiil* as, by way of, as in *ʕala sabiil il-misaal* by way of example, *ʃif-firka bi-twazzaʕ in-nataayig ʕala sabiil hadaaya* the company distributes the calendars as gifts. *fi-sabiil* for the sake of, as in *kull-u yhuun fi-sabiil ig-gumhuur* no effort is too great for the sake of the public, *fi-sabiil illaah* for the sake of God, out of charity. **2** /no pl/ **2a** water distributed out of charity to the thirsty. **2b** *[obsol]* the cry of one distributing water to the thirsty. **3** /pl *sibíla*/ public drinking-fountain.
سبيل *sibiil* = *sabiil* 3.
سبّل *sabbil[1]* /vt/ to dedicate, set apart for charity, set apart to serve people. - vn *tasbiil*; ava/pva *misabbil*.
اتسبّل *ʃitsabbil[1]* or *ʃissabbil[1]* /vi/ to be dedicated, be set apart for charity. - iva *mitsabbil*.

س ب ل [2]
سبل *sabal[1]* /coll n/ heads or ears of cereals. ‖ *miʃt[i] sabal* braided stalks of green wheat which are hung in homes at the time of ripening for good luck, a kind of corn dolly.
سبلة *sabala* /unit n, pl *-aat*/ a head or ear (of a cereal plant).
سبلاية *sabalaaya* = *sabala*.
سبّل *sabbil[2]* /vi/ to put out ears (of cereals). - vn *tasbiil*; ava *misabbil*.

س ب ل [3]
سبل *sabal[2] (i)* /vt/ **1** to drape, cause to hang loosely. *sabalit ṭarħa ʕala ras-ha* she covered her head with a veil. ‖ *ya saabil is-satr[a] ʕala ʕabiid-ak ya-rabb* ≈ you cover your creature's sins with the veil of Your mercy, O Lord! **2** to shed (tears). - vn *sabl*; ava *saabil*; pva *masbuul*.
سبّل *sabbil[3]* /vt/ **1** to half close (the eyes). *sabbilit ʕenee-ha min ik-kusuuf* she cast down her eyes out of bashfulness. **2** to close (the eyes of one deceased). - vn *tasbiil*; ava/pva *misabbil*.
اتسبّل *ʃitsabbil[2]* or *ʃissabbil[2]* /vi/ to be closed (of eyes). - iva *mitsabbil*.

س ب ل [4]
سبل *sabal[3] (i)* /vt/ to spread (manure), fertilize (with manure). - vn *sabl*; ava *saabil*; pva *masbuul*.
سبلة *sabla* /n/ manure, dung (used for fertilizer).
اتسبل *ʃitsabal* or *ʃissabal* /vi/ to be manured. - iva *mitsibil*.

س ب ل س
سبلس *sablis* /vi/ to throw one's opponent using the overhead hold (wrestling). - vn *sablasa*; ava *misablis*.

س ب ل ى –
سبليونة *sabalyoona* <perh It *spagnola*> /n pl *-aat*/ vertical locking-rod on a double door or window, espagnolette bolt. - also *sabanyoola*.

س ب ن
سبان، صئبان *sibaan* /coll n/ eggs of hair-lice, nits. *naas zayy is-sibaan* people who can't be shaken off.
سبانة، صئبانة *sibaana* /unit n, pl *-aat*/ an egg of a hair-louse, a nit.
سبّن *sabbin* /vi/ to become full of nits (of hair). - ava *misabbin*.

س ب ن س
سبنسة *sibinsa* <It *dispensa*> /n pl *-aat*/ caboose, guard's van (on a train).

س ب ن ى –
سبنيولة *sabanyoola* <perh It *spagnola*> /n pl *-aat*/ vertical locking-rod on a double door or window, espagnolette bolt. - also *sabalyoona*.

س ب ه ل ل
سبهللة *sabahlala* /adv/ haphazardly, any old how. ‖ *huwwa waaxid il-ħikaaya sabahlala* he's taking the matter too lightly.
سبهللى *sabahlali* /adj invar/ aimless, careless, vague. *ʕiiʃa sabahlali* an aimless life.

س ب و ر see ء س ب و ر : *suboor*

س ب ى [1]
سبى *saba (i)* /vt/ **1** to take prisoner (especially in war).

2 to charm, captivate. *gamal-ha sabaa* her beauty enchanted him. - vn *saby*; ava *saabi*; pva *masbi*.
اتسبى *ʔitsaba* or *ʔissaba* /vi/ 1 to be taken captive. 2 to be enchanted, be charmed. - iva *mitsibi*.

² (س ب ی)
سوبية *subya* <T *sübye*> /n/ cold drink of slightly fermented rice, sugar and water.
سبية *sibya*¹ <P *sih-pây*> /n pl *sibay*/ 1 trestle, tripod. 2 steelyard. - also *seeba*.

س ب ی ا
سبيا *sibya*² <perh It *seppia*> /coll n/ cuttlefish.

س ت ا ن
ستان *sataan* <Fr> /n/ satin. *kastuur sataan* flannel-backed satin.

س ت ت ¹
ستّ *sitt*¹ /num: in constr w foll n pl/ six. *sitt sniin* six years.
ستّة *sitta* /num; in absol state, in apposition, or w foll n sing in contexts of ordering and itemizing; pl -*aat*/ six. *ʔiḥna sitta* there are six of us. *ṭalabna sitta salaṭa* we ordered six salads.
ستّاشر، ستّة عشر *sittaaʃar* 1 /num pl -*aat*/ sixteen. 2 *ʔis-sittaaʃar* /adj invar/ the sixteenth.
ستّين *sittiin* /num/ 1 /pl -*aat*/ sixty. ‖*ʔaal waaḥid wi-sittiin* he took to his heels. 2 /no pl/ intensifier used in curses and insults. *ʔibn sittiin kalb* ≈ son of a bitch sixty times over. *ruuḥ fi-sittiin dahya* ≈ go to blackest hell! *ʔibn sittiin fi-sabɛiin* ≈ son of (a bitch) sixty times multiplied by seventy times over. — *ʔis-sittiin* /adj invar/ 3 the sixtieth.
ستّمية، ستّمائة *suttumiyya* 1 /num pl -*aat*/ six hundred. 2 *ʔis-suttumiyya* /adj invar/ the six-hundredth.
ساتت *saatit* /adj/ sixth.

س ت ت ²
ستّ *sitt*² /n pl -*aat*/ 1 lady, woman. *ʔis-sittaat fi-ʔingiltira* the women in England. ‖ *ʔis-sitt btaɛt-u* his wife. - *sitt il-ḥusn (wig-gamaal)* (1) fairy-tale princess or heroine. (2) *[bot]* belladonna. 2 mistress. *sitt il-beet* the mistress of the house. *sitt-ik mawguuda* is your mistress at home? — /no pl/ 3 respectful form of address or reference to a grandmother. *ʔumm-u w-sitt-u maɛaa* his mother and his grandmother are with him. 4 title of and form of address or reference to, a woman. *ʔis-sitt galiila* Mrs. Galila. *la muʔaxza ya sitt-i* excuse me ma'am. ‖*sitt haanim* madam. - *ʔis-sitt* (1) respectful epithet of Sayyida Zaynab. (2) respectful epithet of the late singer Umm Kalthum. - *sitt il-ḥabaayib* the mother. 5 /in constr, w fem referent/ the best of, the finest. *ʔil-luɣa l-ɛarabiyya sitt il-luɣaat* Arabic is the best language. *sitt il-kull* or *sitt is-sittaat* the best of all.
ستّاتي *sittaati* /adj invar/ coquettish, exaggeratedly feminine. *hiyya taṣarrufat-ha sittaati zyaada ɛan il-luzuum* she affects too many girlish airs and graces.
ستّت *sattit* /vt/ to give (a woman her) due as a feminine creature meant for adornment (usually with the implication of relieving a woman of the necessity of doing menial tasks by providing servants or appliances). - vn *tastiit*; ava/pva *misattit*.
اتستّت *ʔitsattit* or *ʔissattit* /vi/ 1 passive of *sattit*. 2 to affect mannerisms of a lady of leisure, play the lady. *ʔana mif waxda ɛala ʔillit il-ḥaraka wala ʔinni ʔatsattit* I'm not used to inactivity nor to lolling about the house like an odalisque. - ava *mitsattit*.
متستّت *mitsattit* /adj */ coquettish, mincing, artificial.

س ت ر
ستر *satar (u)* /vt/ 1 to protect (of God). *loola satr rabb-i-na kaan maat* but for God's protection he would have died. *ʔustur ya rabb* or *rabb-i-na yustur* Lord preserve us! *ʔilli yustur-u l-mawla ma-yifḍaḥ-uu-ʃ il-ɛabd [prov]* no man can disgrace him whom God protects. ‖ *ʔallaah yistur-ak*↓ please, as in *ʔallaah yustur-ak tiddii-ni ʔirʃ* please give me a piastre. 2 to hide, shield so as to maintain decency and decorum. *ʔusturi riglee-ki* cover your legs for the sake of decency. *ʔustur nafs-ak* don't expose yourself to scandal. *ɛayʃiin masturiin* (1) they live quiet, respectable lives, (2) they enjoy a rich life. ‖ *ʔustur bint-ak* get your daughter married! - *xallii-ha mastuura* ≈ let sleeping dogs lie. 3 to cover, protect. *ʔil-xeema satraa* the tent gives him cover. — /vi/ 4 to afford protection or cover (from scandal). *ʔiggawwizt-a-ha ɛafaan ʔastur ɛaleeha* I married her to protect her reputation. *laazim tusturi ɛala gooz-ik* you must shield your husband's good name. 5 to render good service, fulfil a need. *ʔil-ɛarabiyya di satarit maɛaaya ɛafar siniin* this car has served me well for ten years. *ʔil-maɛaziim kaanu kutaar laakin il-ḥamdu l-illaah il-ʔakl satar* there were many guests, but, thank God, the food was adequate. - vn *satr*; ava *saatir*; pva *mastuur*.
ستر *satr* /n/ 1 divine protection. ‖*ɛandu s-satr* he has the decent minimum (euphemism = he has nothing). - *ɛandi s-satr* I have enough, I'm doing all right (indirect response to inquiry into one's financial state). - *ɛandak is-satr [women in trad soc]* may you have

God's protection from disgrace (response to *ʃitfaḍḍali ɛandina).* - *hiyya satr*^{i} *w-ʏaṭa* ≈ she's the sort to keep your name clean (of a potential wife). **2** *[Chr]* altar covering.

ساتر *saatir* /n/ **1** /no pl/ Protector (epithet of God). ‖*ya saatir* said upon entering others' homes, giving the occupants a chance to prepare themselves. - *ya saatir (ya rabb)* expression of dismay ≈ good God! God preserve us! **2** /pl *sawaatir/ [mil]* (protective) cover. *ʃiḍ-ḍarb*^{i} *min xalf*^{i} *saatir* firing from behind cover.

مستور *mastuur* /adj */ **1** wealthy. **2** having one's basic needs provided for. *ʃana mastuur il-ḥamdu li-llaah* I make a living, I get along all right, praise be to God!

سترة *sutra* /n/ **1** /pl *-aat, sutar/* top part of a uniform, jacket of a uniform. **2** /no pl/ protection, safeguard. *gawaaz il-banaat sutra* ≈ it's a safeguard for girls to get married.

ستر *sitr* /n pl *sutuur, ʃastaar/* curtain, drape.

ستار *sitaar* /n/ curtain, screen. ‖*sitaar naar [mil]* artillery barrage. - *ʃis-sitaar il-ḥadiidi* the Iron Curtain. - *min wara s-sitaar* behind the scenes, back-stage, secretly.

ستارة *sitaara* /n pl *sataayir/* curtain. ‖*sataayir maɛdaniyya* venetian blinds.

ستّار *sattaar* /n/ Protector (epithet of God). ‖ *ʃis-sattaar mawguud*↓ ≈ God will never let us down. - *ya sattaar ɛaleeku* ≈ how exasperating you are!

اتستر *ʃitsatar* or *ʃissatar* /vi/ **1** to be shielded so as to maintain decency and decorum. *ma-tiqlaɛ-f*^{i} *quddaam in-naas - xuff*^{i} *guwwa titsitir* don't undress in front of everyone! go inside where no one can see! **2** to appear presentable. *ma-ɛandii-f wala badla ʃatsitir biiha* I don't have a single suit I can decently wear. **3** to maintain a decent standard of living. *laazim ʃalaqii-li ʃuɣla ʃatsitir biiha* I must find a job that'll provide for me adequately. - iva *mitsitir.*

ستّر *sattar = satar.* - ava/pva *misattar.*

اتستّر *ʃitsattar* or *ʃissattar* /vi/ to hide oneself, disguise oneself. - ava *mitsattar.*

¶ *ʃitsattar ɛala* to cover up (a crime etc.).

مستتر *mustatir*↑ /adj */ hidden, disguised.

س ت ف

ستّف *sattif* /vt/ **1** to arrange, stack up, order neatly. *tastiif ik-kutub* shelving the books. *xud ik-karaasi di sattif-ha guwwa* take these chairs and stack them up inside. **2** to pack (with). *ḥ-asaafir bukra w-lissa ma-sattift*^{i}*-ʃ ʃunaṭ-i* I'm travelling tomorrow and have't packed my bags yet. *ʃinta sattift il-ɛarabiyya naas kida leeh* why have you packed the car with people like this? **3** to rebuke harshly. - vn *tastiif*; ava/pva *misattif.*

اتستّف *ʃitsattif* or *ʃissattif* /vi/ **1** to be arranged, be put in order, be stacked. *ʃik-kutub mitsattifa ɛal-ʃurfuf ḥasab il-mawquɛaat* the books are arranged on the shelves by subject. **2** to be packed (with). **3** to be rebuked harshly. - iva *mitsattif.*

س ت ن ى ه

ستانيه *sataneeh* <Fr *satiné*> /n/ cotton satin, satinet.

س ت ى ا ن

سوتيان *sutyaan* <Fr *soutien*> /n pl *-aat/* brassiere. - also *sintiyaan, suntiyaan.*

س ج د

سجد *sagad (u)* /vi/ to prostrate oneself in (or as if in) prayer. - vn *suguud*; ava *saagid.*

سجدة *sagda* /n pl *-aat/* **1** a prostration (in prayer). ‖*ṣalaat is-sagda [Chr]* liturgical prayers used in Holy Week. **2** *[Isl]* one prostration (as a part of ritual prayer).

سجّاد *siggaad* /coll n/ carpet(s), carpeting. ‖*mudiir is-siggaad* official responsible for the carpets in all mosques under the jurisdiction of the Ministry of Religious Endowments.

سجّادة *siggaada* /unit n, pl *-aat, sagagiid/* mat, carpet. *siggaadit ṣala* prayer rug. ‖*ʃeex is-siggaada* head of a Sufi order.

مسجد *masgid* /n pl *masaagid/* mosque.

سجّد *saggid* /vt/ *[usu children]* to cause to submit, outdo. *saggidt-ak - mif ḥa-tḥaawil titnaaqif maɛaaya taani* I've bested you - don't try to argue with me again! *ḥ-asaggid-ha b-kalaam-i l-ḥilw* I'll make her mine with sweet-talk. - vn *tasgiid*; ava *misaggid.*

اتسجّد *ʃitsaggid* or *ʃissaggid* /vi/ passive of *saggid.* - iva *mitsaggid.*

س ج ر [1]

سجّر *saggar*^{1} /vt/ to encourage, embolden, egg on. *ʃinta lli saggart il-wad-da ɛaleek* you are the one who encouraged that boy to be too familiar with you. - vn *tasgiir*; ava/pva *misaggar.*

اتسجّر *ʃitsaggar* or *ʃissaggar* /vi/ **1** to take courage, dare (to do). **2** to be encouraged, be emboldened. - ava/iva *mitsaggar.*

س ج ر [2]

سيجار *sigaar* /n/ cigar.

سيجارة *sigaara, sugaara*↓ /n pl *sagaayir/* cigarette.

‖*sigaarit xeeṭ* spool of thread (the spool being a small tube of cardboard).

سجّر *saggar*[2] /vi/ *[joc]* **1** to smoke cigarettes. **2** to hand out cigarettes. *ʕif-ʃayyaal kaan mizargin li-ʁaayit ma saggart-i-lu* the porter was unhelpful until I gave him a smoke. - vn *tasgiir*; ava *misaggar*.

س ج ع

سجع *sagaʕ*↑ *(a)* /vt/ to speak or write (prose) in a rhymed and rhythmical fashion. - vn *sagʕ*; ava *saagiʕ*; pva *masguuʕ*.

سجع *sagʕ* /n/ rhyme and rhythm in prose.

سجعة *sagʕa* /inst n, pl *-aat*/ a rhyming word in prose.

س ج ف

سجاف *sigaaf* /n pl *-aat*/ trimming ribbon, facing.

س ج ق

سجق *sugugg* <T *sucuk*> /coll n/ sausage(s).

سجقة *sugugga* /n pl *-aat*/ a sausage.

سجقاية *sugugaaya* = *sugugga*.

س ج ل

سجل *sigill* /n pl *-aat*/ register, record. ‖*ʃis-sigill il-madani* the Civil Registry (of births and deaths).

سجّل *saggil* /vt/ **1** to record, register. *saggilu l-bayanaat fi-daftar* they recorded the details in a ledger. *gawaab musaggal* registered letter. **2** to record (magnetically). *ʃaraayiṭ tasgiil* (magnetic) recording-tapes. — /vi/ **3** to register (by pressing the numbered button) the desired floor (in an automatic lift). - vn *tasgiil*; ava *misaggil*; pva *musaggal*.

تسجيل *tasgiil* /n/ **1** (also *gihaaz tasgiil)* tape-recorder. **2** /pl *-aat*/ tape-recording.

مسجّل *musaggil* /n/ **1** /pl *-iin*/ registrar. **2** /pl *-aat*/ tape-recorder.

اتسجّل *ʃitsaggil* or *ʃissaggil* /vi/ passive of *saggil*. - iva *mitsaggil*.

س ج م

سجم *sagam (i)* /vt/ to put in a state of ecstasy. *ʃil-ʁaʕda sagamit il-waaḥid* the company and the surroundings put one in the best of moods. - ava *saagim*.

انسجم *ʃinsagam* /vi/ **1** to reach a state of euphoria or high satisfaction. *ḥafla ʃaaxir insigaam* a really swinging party. *ʃiddit-ni ḥall*[i] *lil-muʃkila ʃinsagamt*[i] *minnu* she gave me a solution to the problem that really pleased me. **2** to be harmonious. *ʃalwaan munsagima* harmonious colours. *ʃaxlaʁ-ha ma-b-tinsigim-ʃ*[i] *maʕa ʃaxlaʁ-hum* her ways are not in tune with theirs. - vn *ʃinsigaam*; ava *minsigim, munsagim*↑.

اتسجم *ʃitsagam* or *ʃissagam* = *ʃinsagam*. - ava *mitsigim*.

س ج ن

سجن *sagan (i)* /vt/ to imprison. *saganuu-ni f-ṭura* they imprisoned me at Turah. - vn *sagn, sign*; ava *saagin*; pva *masguun*.

سجن *sign* /n/ **1** imprisonment, jail sentence. *ʃidduu-lu sana sign* they gave him a year's imprisonment. ‖*ʃis-sign*[i] *lig-gidʕaan* prison is for the tough and manly (boast of jailbirds and criminals). **2** /pl *suguun*/ prison, jail. ‖*wiff*[i] *sguun* jailbird.

مسجون *masguun* /n */ prisoner. *masguun siyaasi* a political prisoner.

سجين *sagiin* /n pl *sugana*/ = *masguun*.

سجّان *saggaan* /n * and pl *saggaana*/ jailer, prison warder.

اتسجن *ʃitsagan* or *ʃissagan* /vi/ to be imprisoned. - iva *mitsigin*.

انسجن *ʃinsagan* = *ʃitsagan*. - iva *minsigin*.

س ح ب

سحب *saḥab (a)* /vt/ **1** to pull along, draw, drag. *saḥabt-u min ʃiid-u* I drew him along by the hand. *lamma trawwaḥ tisḥab laha g-gamuusa f-ʃid-ha* when she goes home she has the buffalo in tow behind her. ‖*dayman masḥuub min lisaan-u* he is always insolent, voluble, and offensive. - *saḥab naaʕim li-* see *naaʕim*. **2** to take away, withdraw. *ʃil-balad saḥabit safir-ha* the country recalled its ambassador. *saḥab nafs-u min il-mawquuʕ* he withdrew from the matter. *ruḥt ana mmayyil wi-saaḥib is-sikkiina* I went and bent down and pulled out the knife. *saḥabt*[a] *ʕafara gneeh mil-bank* I drew ten pounds from the bank. *saḥabt*[i] *ʃiik ʕala bank iskindiriyya* I drew a cheque on the bank of Alexandria. *ʃisḥab kart* draw a card! ‖*saḥab lisaan-u ʕalayya* he insulted me. **3** to draw out, flatten out. *bi-nisḥab il-ʕagiina* we flatten out the dough. *saḥab id-daḥab* he hammered out the gold. **4** to spread (paste, gummy substance). *bi-nisḥab il-maʕguun bi-sikkiina* we spread the paste with a painting spatula. **5** *[text]* to draw (cotton into threads). **6** *[naut]* to fly (a flag). — /vi/ **7** to exert hauling force. *mutoor il-ʕarabiyya dilwaqti b-yisḥab ʃaḥsan mil-ʃawwil* the motor of the car pulls better now than before. - vn *saḥb, saḥabaan*; ava *saaḥib*; pva *masḥuub*.

مسحوب *masḥuub* /adj */ tapered, tapered to a point.

مسحوبات *masḥubaat* /pl n/ *[finan]* withdrawals.

سحاب *saḥaab* /coll n/ cloud(s).
سحابة *saḥaaba* /n pl *-aat*/ **1** /unit n/ a cloud. **2** cataract (of the eye).
سحّاب *saḥḥaab* /adj/ having a strong pull. *mooga saḥḥaaba* a wave with a strong pull.
اتسحب *ʔitsaḥab* or *ʔissaḥab* /vi/ **1** passive of *saḥab*. ‖*rooḥ-i b-titsiḥib minni* I feel faint, I'm about to faint away. **2** *[mil]* to withdraw, retreat. - ava/iva *mitsiḥib*.
انسحب *ʔinsaḥab* =*ʔitsaḥab*. ‖*faaz bil-ʔinsiḥaab* he won by default. - vn *ʔinsiḥaab*; ava/iva *minsiḥib*.
اتسحّب *ʔitsaḥḥab* or *ʔissaḥḥab* /vi/ to move stealthily, creep. *ʔil-wilaad itsaḥḥabu min ʕeer ṣoot ʕala ṭaraṭiif ṣawabiʕ-hum* the boys crept soundlessly on tiptoe. - ava *mitsaḥḥab*.

س ح ت
سحت *suḥt* /n/ ill-gotten gains, illegal possessions. *maal-u suḥt* his capital has been acquired illegally. *ʕiʔit-hum suḥt[i] f-suḥt* they make their living by totally illicit means.

س ح ت و ت
سحتوت *saḥtuut* (also *samtuut*) /pl *saḥatiit*/ /n/ *[obsol]* **1** unit of land measure equal to 0.304 square metres. **2** one-twentieth of a piastre coin. - current in the phrases: *wala saḥtuut* ≈ not a single penny. *ṛaagil saḥtuut* a tight-fisted miser.

س ح ح [1]
سحّ *saḥḥ[1] (i)* /vt and vi/ to flow, stream. *ʕenee nazla tsiḥḥ[i] (bid-) dumuuʕ* his eyes shed tears. *ʔin-naṭara kaanit bi-tsiḥḥ[i] ṭuul il-leel* it was raining cats and dogs all night long. - vn *saḥḥ, saḥaḥaan*; ava *saaḥiḥ*.
سحّاحة *saḥḥaaḥa* /n pl *-aat*/ burette.

س ح ح [2]
سحّ *saḥḥ[2]* exclamation urging a ram to fight, notably in the children's chant *ʔis-saḥḥ id-daḥḥ (ya) xaruuf naṭṭaaḥ*.

س ح ر [1]
سحر *saḥar (i)* /vt/ **1** to charm, enchant (of beauty etc.). *ya salaam lamma ʕeneen bint[i] tisḥir-ak* how wonderful it is when a girl's eyes ensnare you! **2** to transform, change (by magic). *ʔil-ʕaguuza saḥarit-u ʔarnab* the old woman turned him into a rabbit. — /vi/ **3** to cast a spell. *ʔil-bitt[i] saḥarit lil-waad ʕaʃaan yiḥibb-a-ha* the girl put a spell on the boy to make him love her. - vn *siḥr*; ava *saaḥir*; pva *masḥuur, masḥuur*.
سحر *siḥr* /n/ **1** magic, sorcery. **2** charm, allure.
سحرى *siḥri* /adj/ magic(al). *ʔalʕaab siḥriyya* magic tricks. ‖*miraaya siḥriyya* distorting mirror. - *geeb siḥri* pocket sewn to the inside (of, e.g., trousers) as protection from pickpockets. - *ʕeen siḥriyya* glass peephole (in a door).
ساحر *saaḥir* /n * and pl *saḥara*/ sorcerer, magician.
مسحور *masḥuur* /adj/ hidden, concealed, secret. *geeb masḥuur* = *geeb siḥri* (q.v.). *xiyaaṭa masḥuura* (1) slip-stitching. (2) invisible mending.
مسحورة *masḥuura* /n pl *masaḥiir*/ concealed cupboard or storeroom, such as a cupboard under the staircase or a loft.
سحّار *saḥḥaar* /n * and pl *saḥara*/ magician, sorcerer.
سحّارة *saḥḥaara* /n pl *saḥaḥiir, saḥḥaraat*/ **1a** storage box, chest or crate. **1b** storage room (usually a loft). **2** *[agric]* inspection shaft in a covered drainage canal.
اتسحر *ʔitsaḥar* or *ʔissaḥar* /vi/ passive of *saḥar*. - iva *mitsiḥir*.

س ح ر [2]
سحور *suḥuur* /n/ last meal taken before daybreak during Ramadan.
سحّر *saḥḥar* /vt/ **1** to serve the *suḥuur* to, provide the *suḥuur* for. **2** to wake (Muslims) for the *suḥuur* during Ramadan, usually by means of drumming. - vn *tasḥiir*; ava *misaḥḥar*.
مسحّراتى *misaḥḥaraati* /n pl *-yya*/ one who cries and beats a drum to wake Muslims for the *suḥuur*.
اتسحّر *ʔitsaḥḥar* or *ʔissaḥḥar* /vi/ to eat the *suḥuur*. - ava *mitsaḥḥar*.

س ح س
سحس *siḥs* /n/ *[joc]* nickname for Hussein.

س ح س ح
سحسح *saḥsaḥ* /vi/ **1** to leak (of a liquid). *ʔil-mayya saḥsaḥit ʕal-ʔarḍ* the water leaked onto the ground. **2** *[slang]* to feel sexually excited. - vn *saḥsaḥa*; ava *misaḥsaḥ*.

س ح ف see ز ح ف : *saḥaf*

س ح ق [1]
سحق *saḥaq (a)* /vt/ **1** to powder, pulverize. *sukkar masḥuuq* powdered sugar. ‖*saḥq il-maʕguun* sanding a prepared surface prior to painting it. **2** to get rid of (s.o.), throw (s.o.) out, finish (s.o.) off. *ʔisḥaq-u bʕiid ʔallaah la-yirgiʕ-u* to hell with him! - vn *saḥq*; ava *saaḥiq*; pva *masḥuuq*.

سحقة *saḥqa* /n pl *-aat*/ **1** instance noun of *saḥq*. **2** mitre saw.

مسحوق *masḥuuq* **1** /n pl *-aat, masaḥiiq*/ powder. ‖*masḥuuq il-ʕizaaz* glazing powder. **2** *masaḥiiq* /pl n/ make-up (powder, rouge etc.).

سحيق *saḥiiq* /adj/ very far or deep, very distant.

اتسحق *ʔitsaḥaq* or *ʔissaḥaq* /vi/ passive of *saḥaq*. - ava *mitsiḥiq*.

انسحق *ʔinsaḥaq* = *ʔitsaḥaq*. - iva *minsiḥiq*.

س ح ق [2]

ساحق *saaḥiq* /vi/ to engage in lesbianism. - vn *siḥaaq, misaḥqa*; ava *misaaḥiq*.

سحاق *siḥaaq* /n/ lesbianism.

مساحقة *misaḥqa* = *siḥaaq*.

س ح ل [1]

سحليّة *siḥliyya* /n pl *saḥaali*/ **1** lizard. ‖*mara zayy is-siḥliyya* a cunning devious female. **2** *[print]* quoin.

س ح ل [2]

سحل *saḥal (a)* /vt/ **1** to torture by dragging over the ground with a rope tied to the legs. **2** to make thin, lean or withered. *ʔil-ʕaya saḥal-u* illness shrivelled him up. - vn *saḥl*; ava *saaḥil*; pva *masḥuul*.

اتسحل *ʔitsaḥal* or *ʔissaḥal* /vi/ passive of *saḥal*. - iva *mitsiḥil*.

انسحل *ʔinsaḥal* = *ʔitsaḥal*. - iva *minsiḥil*.

س ح ل [3]

ساحل *saaḥil* /n pl *sawaaḥil*/ coast, shore.

الساحل *ʔis-saaḥil* /prop n/ district in north Cairo.

ساحلي *saaḥili* /adj/ pertaining to the coast, coastal. *ʔid-dawriyyaat is-saaḥiliyya* coast patrols, coastguard.

سواحلي *ṣawaḥli* **1** /adj/ pertaining to the coast, coastal. **2** /n pl *-yya*/ a coastal inhabitant.

س ح ل ب [1]

سحلب *saḥlib* /vt/ to move (s.th.) stealthily. *ʔin-naffaal saḥlib ʔiid-u f-maḥfaẓit-ha w-saraq il-ʕirfeen* the pick-pocket slipped his hand into her wallet and got the money. - vn *saḥlaba*; ava *misaḥlib*.

اتسحلب *ʔitsaḥlib* or *ʔissaḥlib* /vi/ to move stealthily, creep. *ʔissaḥlibna waraa* we crept after him. - vn *tisaḥliib*; ava *mitsaḥlib*.

س ح ل ب [2]

سحلب *saḥlab* /n/ salep (dried tuber of various species of Orchis); thick, sweet drink made from salep.

س ح ل ف

سحلفة *siḥlifa, suḥlifa* /n pl *-aat, saḥaalif*/ tortoise. - also *silḥifa, sulḥifa, ziḥlifa, zuḥlifa, zilḥifa, zulḥifa*.

س ح ل و ت

سحلوت *saḥluut* /adj/ gay, flighty, frolicsome, light-hearted. *raaḥ iggawwiz bint[i] saḥluuta f-sinn[i] wlaad-u* he went and married a flighty girl young enough to be his daughter.

س ح ل و ل

سحلول *saḥluul: ʔumm[i] saḥluul [abus]* appellation for a vulgar or ugly woman.

س ح ن

سحنة *siḥna* /n pl *-aat, siḥan*/ physiognomy, face. *ʕalab-li siḥnit-u min ɣeer sabab* he scowled at me for no reason. *ʔeeh is-siḥna l-ɣalaṭ di* what an unpleasant-looking man!

س خ خ

سخ *saxx (u)* <perh Copt> **1** /vt/ to strike, hit, beat. *saxx-u ʕalʕa ndiifa* he gave him a good hiding. **2** /vi/ to pour with rain. *ʔid-dunya kaanit bi-tsuxx* it was raining very hard. - vn *saxaxaan, saxx*; ava *saaxix*; pva *masxuux*.

اتسخّ *ʔitsaxx* or *ʔissaxx* /vi/ to be struck, be hit, be beaten. - iva *mitsaxx*.

انسخّ *ʔinsaxx* = *ʔitsaxx*. - iva *minsaxx*.

س خ ر [1]

سخر *saxar (a)* /vi/ to jeer, scoff, sneer, laugh (at s.o.). *ma-yṣaḥḥ[i]-ʃ nisxar min-naas* it is not right for us to make fun of people. - vn *suxriyya*; ava *saaxir*.

سخريّة *suxriyya* /n/ **1** ridicule, sarcasm. **2** laughing-stock.

مسخرة *masxara* /n pl *masaaxir*/ preposterous behaviour, farce. *bala ʕillit ḥaya w-masxara* stop this shameless and outrageous behaviour. see further under م س خ ر

اتسخر *ʔitsaxar* or *ʔissaxar* /vi/ (impersonal) passive of *saxar*. *ʔil-fuʕara ma-yitsixir-ʃ[i] minhum* the poor are not to be sneered at. - iva *mitsixir*.

س خ ر [2]

سخرة *suxra* /n/ forced labour, corvée.

سخّر *saxxar* /vt/ to enslave, subjugate. *bi-ysaxxaru l-ginn[a] ʕaʃaan yiʕrafu ʔasraar in-naas* they enslave the jinn in order to know people's secrets. ‖*ʔinta ḥa-*

tsaxxar-ni do you imagine I'm your slave (to order me about so)? - vn *tasxiir*; ava/pva *misaxxar*; pva *musaxxar*.

اتسخّر *ʔitsaxxar* or *ʔissaxxar* /vi/ to be subjugated, be enslaved. - iva *mitsaxxar*.

س خ س خ

سخسخ *ṣaxsax*[1] /vi/ to faint, swoon. *saxsaxit mit-taʕab* she fainted from weariness. ‖*saxsaxit (ʕala nafs-a-ha) min id-diḥk* she almost died laughing. - vn *saxsaxa*; ava *misaxsax*.

مسخسخ *misaxsax* /adj/ pale, wan, faint. *bamba msaxsax* shocking pink.

سخسخ *saxsax*[2] /adj invar/ fancy (of clothes). *ʃeex il-ʕayqiin illi laabis ig-gibba s-saxsax* the big dandy in the knock-out robe.

س خ ط [1]

سخط *saxaṭ*[1] *(a)* /vt/ to metamorphose. *ʃakl-u masxuuṭ zayy il-qird* he looks as if he's been changed into a baboon. ‖*qaalu ya qird*[i] *raaḥ yisxaṭuu-k - qaal raaḥ yiʕmiluu-ni ʏaẓaal [prov]* ≈ those who have nothing to lose cannot be hurt. - vn *saxṭ, saxaṭaan*; ava *saaxiṭ*; pva *masxuuṭ*.

سخطة *saxṭa: ya saxṭa* you weak thing! you baby! (insult addressed to an adult who is behaving childishly).

مسخوطة *masxuuṭa* /n pl *masaxiiṭ*/ *[non- Cairene]* idol, small statue used as a charm.

اتسخط *ʔitsaxaṭ* or *ʔissaxaṭ* /vi/ to be metamorphosed. - iva *mitsixiṭ*.

انسخط *ʔinsaxaṭ* = *ʔitsaxaṭ*. - iva *minsixiṭ*.

س خ ط [2]

سخط *saxaṭ*[2] *(a)* /vi/ to become annoyed or angry. *saxaṭit ʕal-ʕiiʃa wi-lli ʕayʃin-ha* she was fed up with everything. - vn *suxṭ*; ava *saaxiṭ*.

س خ ف

سخف *suxf* = *saxaafa*.

سخافة *saxaafa* /n pl *-aat*/ **1** fatuous stupid or asinine behaviour. **2** nasty or disagreeable behaviour.

أسخف *ʔasxaf* /el/ **1** more/most stupid. **2** more/most disagreeable.

سخيف *saxiif* /n pl *suxafa*/ **1** fatuous, stupid, asinine (of people and behaviour). **2** disagreeable, nasty.

سخّف *saxxaf* **1** /vt and vi/ to mock, scorn, denigrate. *baṭṭal tisaxxaf fiyya wi-tsaxxaf raʔy-i quddaam in-naas* stop pouring scorn on me and my opinions in front of people. **2** /vi/ to behave fatuously. - vn *tasxiif*; ava/pva *misaxxaf*.

اتسخّف *ʔitsaxxaf* or *ʔissaxxaf* /vi/ **1** to behave fatuously. **2** to be mocked, be scorned, be denigrated. - ava/iva *mitsaxxaf*.

استسخف *ʔistasxaf* **1** /vt/ **1a** to consider fatuous or stupid. **1b** to consider disagreeable or nasty. **2** /vi/ **2a** to behave fatuously or stupidly. **2b** to behave disagreeably. - ava/pva *mistasxaf*.

س خ م

سخام *suxaam* or *suxaam* /n/ **1** filth, dirt. ‖*ʕiifit is-suxaam* a stinking life. **2** *[women, coarse slang]* (male) sexual organ. — /adj invar/ **3** (also *suxaam iṭ-ṭiin*) rotten, awful. *ʔabuu-ha suxaam iṭ-ṭiin qaal kida* her rotten father said so. *ʔin-naas is-suxaam dool* those lousy people.

سخامة *suxaama* /n/ disgusting thing. *nawlii-ni s-suxaama lli ʕaṭ-ṭarabeeza* hand me over that damned what's-its-name on the table!

أسخم *ʔasxam* /el/ worse, worst. *ʔil-ʕuzubiyya suxaam wig-gawaaz ʔasxam* the unmarried state is misery but marriage is worse. *ma-sxam min sitt-i ʔilla siid-i [prov]* (my mistress and my master are worse than each other) ≈ six of one and half a dozen of the other.

سخّم *saxxam* /vt/ **1** to soil, dirty. ‖ *ʔinta bi-tsaxxam ʔeeh* what are you mucking about at? **2**↓ *[coarse]* to fuck. - vn *tasxiim*; ava *misaxxam*.

اتسخّم *ʔitsaxxam* or *ʔissaxxam* /vi/ **1** to be soiled, be dirtied. **2**↓ *[coarse]* to be fucked. - iva *mitsaxxam*.

س خ م ط

سخمط *saxmaṭ* /vt/ **1** to soil, smear, blotch. *saxmaṭ il-waraqa ḥibr* he splotched the paper with ink. *wiff-u msaxmaṭ fukulaata* his face is smeared with chocolate. **2** *[coarse]* to fuck. - vn *saxmaṭa*; ava/pva *misaxmaṭ*.

سخماط *suxmaaṭ* /n/ *[coarse]* form of reference to a worthless person or object.

اتسخمط *ʔitsaxmaṭ* or *ʔissaxmaṭ* /vi/ **1** to become soiled, become smeared. **2** *[coarse]* to be fucked. - vn *tisaxmiiṭ*; ava/pva *mitsaxmaṭ*.

س خ ن

سخن *sixin, suxun (a)* /vi/ **1** to become hot, become warm. *ʔil-mayya b-tisxan ʕal-butagaaz* the water is heating on the gas. ‖ *ʔil-xinaaqa sixnit qawi* the dispute became extremely heated. **2** to become feverish. *sixint*[i] *naar wi-qaalu di malarya* I became very feverish and they said it was malaria. - vn *suxuuna, suxuniyya*; ava *saaxin*.

سخونة *suxuuna, sixuuna* /n/ **1** heat. **2** fever.

سخونيّة *suxuniyya* /n/ **1** heat. **2** fever.

ساخن *saaxin* /adj */ hot, warm.
سخنان *saxnaan* /adj */ feverish.
سخن *suxn* /adj */ **1** warm, hot. *(ʃil-ɛeen) is-suxna* a hot spring about 50 km south of Suez on the west coast of the Red Sea. ‖ *ʃaddii-lu ɛalqa suxna* I'll give him a good hiding. - *miʃwaar suxn* burdensome errand. **2** feverish.
أسخن *ʃasxan* /el/ warmer/warmest, hotter/hottest.
سخّانة *saxaana* /n pl *-aat*/ = *suxuniyya*.
سخّان *saxxaan* /n pl *-aat*/ **1** water-heater. **2** heating element.
سخّن *saxxan* **1** /vt/ to heat, warm. *saxxani-lna l-ʃakl* heat up the food for us! ‖ *ʃil-mutoor ɛaawiz tasxiin* the engine needs warming up. - *saxxan-lu ɋafaa* give him a burning slap on the neck. - *ma-ysaxxan-ʃ*^{i} *ɋalb-ik [women in trad soc]* may you never grieve! **2** /vi/ to warm up. *nimra talaata barra l-malɛab bi-ysaxxan* player number three is warming up on the sidelines. - vn *tasxiin*; ava/pva *misaxxan*.
تسخينة *tasxiina* /inst n, pl *-aat*/ a (single) heating.
اتسخّن *ʃitsaxxan* or *ʃissaxxan* /vi/ to be heated, be warmed. - iva *mitsaxxan*.
استسخن *ʃistasxan* /vt/ **1** to select for heat or warmth. **2** to consider hot or warm. - ava *mistasxan*.

س خ و see س خ ى : *saxaawa*

س خ ى
سخى *saxi* /adj pl *ʃasxiya*/ liberal, generous. *saxi ɛala l-fuɋara* he is generous to the poor. *ʃid-ha saxiyya* ≈ she is open-handed.
سخاء *saxaaʔ*$^{\uparrow}$ /n/ generosity.
سخاوة *saxaawa* /n/ generosity.

س د ا ب
سداية *sidaaba* /n pl *sadaayib*/ **1** decorative moulding (of wood, plaster and the like). **2** thin strip of wood (especially that used in decorative moulding).

س د ا ح
سداح *sadaaḥ: sadaaḥ madaaḥ* a state of utter confusion.

س د ا ن see ^{2} س و د : *ʃis-sudaan, sudaani, sudaniyya*

^{1} س د ب
سذاب *sadaab* /coll n/ rue, herb of grace (used in folk medicine). - also *sazaab*.
سذب *sadab* = *ʃadaab*. - also *sazab*.

^{2} س د ب see س د ا ب : *sidaaba*

س د د
سدّ *sadd*^{1} *(i)* /vt/ **1** to block, dam, fill. *ʃiṭ-ṭabba bi-tsidd il-banyu* the plug stops up the bath. *kaan fii zaḥma sadda s-sikka* there was a crowd blocking the way. *ʃil-ɛummaal saddu l-ḥufra lli fiʃ-ʃaariɛ* the workers filled the hole in the road. *ʃil-baab illi yiigi minnu r-riiḥ sidd-u wi-stiriiḥ [prov]* ≈ stop up the source of trouble and relax. ‖ *ma-tsidd-haa-ʃ* don't be pessimistic, don't give up hope. - *bi-ysidd-a-ha f-wiʃʃ-i-na* he's driving us up the wall. - *sadd in-nifs* to take away the appetite, dampen one's enthusiasm, as in *ḥaaga tsidd in-nifs* something that really puts you off, *nifs-i masduuda ɛan il-ʃakl* I have no appetite for food, *buxl-u sadd*^{i} *nifs-i ɛan id-dinya* his stinginess has made me sick of life. - *sadd*^{i} *xaana* to act as a (mere) stopgap, fill in for one more competent or better qualified, as in *gibnaa ysidd*^{i} *xaana mwaɋɋat ɛala ma nlaaɋi waaḥid ɛidil* we brought him in just as a temporary stopgap till we could find someone decent. - *ḥaara sadd* blind alley, cul-de-sac. - *sadd il-ḥanak* pudding of flour, sugar and butter. **2** to pay (a debt, a bill). *sidd illi ɛaleek liyya* pay what you owe me. — /vt and vi/ **3** to suffice (for), be enough (for). *ʃil-mahiyya ma-bi-tsidd*^{i}*-ʃ ḥaaga* the salary isn't enough for anything. *tamwiin iʃ-ʃahr*^{i} *ma-bi-ysidd*^{i}*-ʃ (ʃusbuuɛ)* the monthly ration isn't enough (to cover a week). — /vi/ **4** to be dependable, be reliable. *bi-ysiddu f-waɋt iz-zanɋa* they may be relied upon in a tight fix. *raagil il-beet laazim yimla markaz-u - laazim yisidd* the man of the house must live up to his position; he must be dependable. - vn *sadd, sadadaan*; ava *saadid*; pva *masduud*.
¶ *sadd*^{i} *maṭraḥ* to fill in for, substitute for. *ʃil-ɛasal yisidd*^{i} *maṭraḥ is-sukkar* honey is a substitute for sugar.
سدّ *sadd*^{2} /n pl *suduud*/ **1** block, obstruction. **2** dam. *ʃis-sadd il-ɛaali* the High Dam (at Aswan).
سدّ *sadd*^{3}: *sadd*^{i} *sadd* hush now! stop crying! (to a child).
سدّة *sadda*^{1} /inst n, pl *-aat*/ an obstruction, an obstacle, a barricade. ‖ *saddit iʃ-ʃiryaan* or *ʃis-sadda ʃ-ʃiryaniyya [path]* embolism.
سدّة *sidda* /n pl *sidad*/ **1** mat of dried reeds used for roofing and as walls. **2** partition.
سدد *sadad* /n pl *suduud*/ = *sadd*.
أسدّ *ʃasadd* /el/ more/most pertinent, relevant, or correct.
سداد *sadaad: sadaad ir-raʃy* level-headedness, judiciousness, correctness.
سداد *sudaad* /n/ obstruction. *bi-yɋaasi min sudaad fi-manaxiir-u* he suffers from an obstruction in his nose.
سدادة *sidaada* /n pl *-aat*/ cork, stopper.

سديد *sadiid* /adj/ pertinent, right, relevant, correct. *raʃy[i] sadiid* correct opinion.

سدّاد *saddaad* **1** /n * and pl *saddaada*/ filler-in, stand-in, stopgap. **2** /adj */ standing-in (for s.o. or s.th.). ‖*raqabt-i saddaada* I'll do it for you no matter what the cost.

سدّادة *saddaada* /n pl *-aat*/ plug, stopper.

مسدّ *masadd: sadd[i] masadd* to fill in for, stand in for. *bi-ysidd[i] masadd axuu* he stands in for his brother.

اتسدّ *ʔitsadd* or *ʔissadd* /vi/ **1** to be blocked, be stopped up. *mawasiir il-magaari tsaddit min iz-zibaala* the drains became blocked with rubbish. ‖*kull[a] ħaaga tsaddit fi-wiʃʃ-i* I was at a loss as to what to do, I was blocked at every turn. **2** to be paid (of a debt or bill). *ʔil-filuus ma-tsaddit-ʃ[i] lissa* the money hasn't been paid yet. **3** to stop talking, shut up. *ʔitsadd* belt up! - ava/iva *mitsadd*.

انسدّ *ʔinsadd* = *ʔitsadd*. - vn *ʔinsidaad*; ava/iva *minsadd*.

سدّد *saddid* /vt/ **1** to block off completely. *saddidu kull is-sikak ɛaʃaan il-mawkib yifuut* they blocked off all the roads so that the procession could pass. ‖*saddid (il-ʔabwaab) fi-wiʃʃ-(u)* to slam the door in someone's face, refuse to co-operate, as in *kunt[a] ɛaawiz ʔaquḷ-lak ħaaga laakin saddidt il-ʔabwaab fi-wiʃʃ-i* I wanted to tell you something, but you would have nothing to do with me. **2** to pay (what is due). *ma-maɣuu-ʃ filuus yisaddid biiha l-gumruk* he doesn't have money to pay the customs duty. **3** to fill in (a form, a register etc.). *saddid id-dafaatir ɋabl[i] ʔaaxir iʃ-ʃahr* make up the books before the end of the month. - vn *tasdiid*; ava/pva *misaddid*.

اتسدّد *ʔitsaddid* or *ʔissaddid* /vi/ passive of *saddid*. - iva *mitsaddid*.

س د ر [1]

سدر *sidr[1]* /coll n/ *[bot]* **1** variety of Christ's thorn (Zizyphus spina Christi). **2a** lotus tree. **2b** lotus blossom.

سدرة *sidra[1]* /pl *sidar, -aat*/ unit noun of *sidr[1]*. ‖*sidrit il-muntaha [Isl]* the (lotus) tree in the seventh heaven. *waṣal l-sidrit il-muntaha* he attained the highest goal, he achieved supreme results.

س د ر [2]

سدرة *sidra[2]: haati ya sidra waddi ya midra [prov]* ≈ what one hand does, the other undoes.

سدريّة *sidriyya* /n pl *-aat*/ large metal washing-up bowl.

س د ر [3] see ص د ر : *sidr[2], sidri, sidriyya, sideeri*

س د س

سدس *suds* /n pl *ʔasdaas*/ one sixth, a sixth part. ‖ *ʔaalit is-suds* sextant. - *(ɋarab) ʔaxmaas fi-ʔasdaas* (to be in) a state of bewilderment.

سداسى *sudaasiˆ* /n pl *-yyaat*/ sextet.

سادس *saadis* /adj/ sixth.

سدّس *saddis* /vt/ **1** to mutiply by six, make sixfold. **2** to make hexagonal. - vn *tasdiis*; ava/pva *misaddis*.

مسدّس *musaddas* /n pl *-aat*/ **1** hexagon. **2** hand gun, pistol (or gun-like device). *musaddas raʃʃ* spray-gun. *musaddas mayya* water-pistol. *musaddas ṣoot* starting pistol. — /adj/ **3** (also *misaddis*) hexagonal.

س د غ see ص د غ : *sidɣ, sadɣ, sidiɣ, ʔasdaɣ, saddaɣ, ʔistasdaɣ*

س د ق see ص د ق : *sadaq, sadq, saadiq, sadaqa, ʔasdaq, sadaaqa, misdaaq, saddaq, ʔitsaddaq*

س د ل [1]

سدل *sadal (i)* /vt/ to let hang or fall. *bi-tisdil ḍafayir-ha ɛala ktaf-ha* she wears her braids hanging down on her shoulders. - vn *sadl*; ava *saadil*; pva *masduul*.

سدلة *sadla* /n pl *-aat*/ **1** instance noun of *sadl*. **2** curtain, veil.

اتسدل *ʔitsadal* or *ʔissadal* /vi/ **1** to hang down, fall down. **2** passive of *sadal*. - ava/iva *mitsidil*.

انسدل *ʔinsadal* = *ʔitsadal*. - ava/iva *minsidil*.

س د ل [2] see س د ى ل : *sidiil*

س د ى

سدى *sada (i)* /vt/ *[text]* to thread (a warp). - vn *sady, sida*; ava *saadi*; pva *masdi*.

سدا، سدى *sida* /n/ *[text]* warp.

سدوة *sidwa* /n/ *[text, obsol]* a warp thread.

مسديّة *masdiyya* /n pl *masaadi, masdiyyaat*/ *[text]* a warp thread.

اتسدى *ʔitsada* or *ʔissada* /vi/ passive of *sada*. - iva *mitsidi*.

سدّى *sadda[2]* = *sada*. - vn *tasdiyya*; ava/pva *misaddi*.

مسدّى *misaddi* /n */ *[text]* operator of a warping machine.

اتسدّى *ʔitsadda* or *ʔissadda* /vi/ passive of *sadda*. - iva *mitsaddi*.

س د ى ل

سديل *sidiil* <perh It *sedile*> /n pl *-aat, sidíla*/ lavatory seat...

س ذ ب see ¹س د ب and س ز ب

س ذ ج see س ز ج

س ر ا د ق
سرادق *suraadiq* or *suraadiq*↑ /n pl *-aat*/ temporary pavilion of appliquéed or patterned cloth set up in a public place for funeral receptions or other large gatherings.

س ر ا ى
سراية *saraaya* <P *sarây*> /n pl *-aat*/ **1a** palace. ‖ *ɛeef is-saraaya* sweet consisting of a kind of sponge cake soaked in syrup. **1b** large house, manor house. **2** *ʕis-saraaya* (also *ʕis-saraaya ṣ-ṣafra*) madhouse, nuthouse. *laazim yiwadduu s-saraaya ṣ-ṣafra* he ought to be locked up, he belongs in a nuthouse.

س ر ب
سرب *sirb* /n pl *ʕasraab*/ **1** flock (of birds). **2** squadron (of aircraft).
سرباتى *surabaati* /n pl *-yya*/ one who cleans drains and cesspools.
سراب *saraab* /n/ mirage.
مسرب *masrab* /n pl *masaarib*/ course, path (of a stream).
مسراب *musraab* /n pl *masariib*/ rain drain, sewer. - also *muzraab*.
سرّب *sarrab* /vt/ **1** to cause or allow to leak out. *ʕik-kuuz bi-ysarrab mayya* the tin mug leaks water. ‖ *ʕil-muwaẓẓaf sarrab il-xabar* the employee leaked the news. **2** to convey secretly, smuggle. *sarrab ik-kalb¹ min il-beet* he smuggled the dog out of the house. – /vi/ **3** to be leaky. *ʕil-ḫigaara bi-tsarrab* the batteries leak. -vn *tasriib, taṣriib*; ava *misarrab*.
تسريبة *tasriiba* /inst n, pl *-aat*/ **1** a way of slipping out. *ʃufnaa-lu tasriiba ɛafaan nitxallaṣ minnu* we found a way to get him off our backs. **2** a (skilful) dribbling or weaving manoeuvre (in soccer).
اتسرّب *ʕitsarrab* or *ʕissarrab* /vi/ **1** to leak, seep, be leaked. *ʕil-mayya tsarrabit fir-ramla* the water seeped into the sand. **2** to convey oneself or be conveyed secretly, be smuggled. *ʕil-mugrim itsarrab minhum* the criminal gave them the slip. *ʕil-biḍaaɛa tsarrabit min il-markib* the goods were smuggled off the ship. - ava/iva *mitsarrab*.

س ر ب ع
سربع *sarbaɛ* /vt/ to fluster, rush and agitate. *ʕil-mudiir misarbaɛ-ni ɛal-waraɛa di* the director has got me into a flap over this paper. - vn *sarbaɛa*; ava *misarbaɛ*.
اتسربع *ʕitsarbaɛ* or *ʕissarbaɛ* /vi/ **1** to be flustered. **2** to throw a tantrum. - vn *tisarbiiɛ*; ava/iva *mitsarbaɛ*.

س ر ب ن
سربنتينة *sarabintiina* <It *serpentina*> /n pl *-aat*/ coil (of, e.g., a refrigerator or water-heater).

س ر ت
سرت *sart* /coll n/ small immature fruit(s) or vegetable(s).
سرتاية *sartaaya* /unit n, pl *-aat*/ a small immature fruit or vegetable.

س ر ت ن
سرتن *sartin* <Engl *thirty-one*> /vi/ *[coarse]* to masturbate, jerk off. - vn *sartana*; ava *misartin*.

س ر ت ى ن
سرتينة *sartiina* <It *sentina*> /n/ bilge, bilge water. *bumba sartiina* bilge pump. - also *santiina*.

¹س ر ج
سرج *sarag (i)* /vt/ to saddle. *ʕisrig-li l-ḫuṣaan* saddle the stallion for me. - vn *sarg*; ava *saarig*; pva *masruug*.
سرج *sarg* /n pl *suruug*/ saddle.
سرجى *sargi: ʕiṭ-ṭariiqa s-sargiyya [athl]* the straddling style (in the high jump).
سروجى *suruugi* /n pl *-yya*/ saddler. ‖ *suruugi sayyaraat* car upholsterer.
اتسرج *ʕitsarag* or *ʕissarag* /vi/ to be saddled. - iva *mitsirig*.
سرّج *sarrig* = *sarag*. - vn *tasriig*; ava/pva *misarrig*.
اتسرّج *ʕitsarrig* or *ʕissarrig* /vi/ passive of *sarrig*. - iva *mitsarrig*.

²س ر ج
سراجة *siraaga*¹ /n/ **1** /vn/ basting, tacking. **2** /pl *-aat*/ manner of basting.
سرّج *sarrag, sarrag* /vt/ *[needlew]* to baste, tack. - vn *tasriig, tasriig*; ava/pva *misarrag, misarrag*.
اتسرّج *ʕitsarrag, ʕitsarrag* or *ʕissarrag, ʕissarrag* /vi/ passive of *sarrag*. - ava/iva *mitsarrag, mitsarrag*.

³س ر ج
سرج *sarag (i)* /vi/ to strike (of lightning): ‖ *ḍarab-ni ɋalam xalla ɛeen-i saragit* he gave me a slap that made me see stars. - vn *saragaan*; ava *saarig*.
سراج *siraag* /n pl *ʕasriga, siríga*/ oil lamp.
مسرجة *misriga* /n pl *masaarig*/ = *siraag*.

[4] (س ر ج)
سرجة *sarga:* ʕabu sarga St. Sergius. *kiniisit ʕabu sarga* the Church of St. Sergius in Old Cairo, believed to be built on the site of the Holy Family's refuge in Egypt.
سراجة *siraaga*[2] /n/ *[vet]* equine lymphangitis.

[5] س ر ج see س ي ر ج : *sirga*

س ر ح
سرح *saraḥ (a)* /vi/ **1** to go about in search of one's livelihood (of, e.g., an itinerant peddler, day labourer, beggar). *bi-yisraḥ bi-tirmis wi-b-yisqi n-naaṣ mayya* he goes about peddling lupin and offering people water to drink. ‖ *ʕisraḥ* go away! (to a beggar). - *naḥl*[i] *saariḥ* worker bees. **2** to go to pasture, graze (of animals). **3a** to wander, stray (of the mind). *ʕaql-u saariḥ ʕala ʕadt-u* he's daydreaming as usual. *xayaal-u saraḥ* his imagination wandered. ‖ *ma-tisraḥ-f*[i] *biyya* don't try and fool me! **3b** to ruminate, reflect. *ʔareet il-xabar da w-saraḥt*[i] *fii ʃwayya* I read that news and turned it over in my mind a bit. **4a** to go further than intended as a result of inattention. *kunt*[i] *raayiḥ lil-baqqaal laakin saraḥt*[i] *baʕd*[i] *minnu ktiir* I was going to the grocer but wandered far beyond without realizing. *ʕiwʕa l-azmiil yisraḥ minnak* mind the chisel (that you are wielding) doesn't slip! *ʕis-sikkiina saraḥit min ʕiid-i ʔaṭaʕit wiff il-laḥma* the knife slipped in my hand and cut the top of the meat. **4b** to continue further (than originally planned). *kunt*[i] *ʕarkab li-ḥadd it-taḥriir wi-vayyart*[i] *muxx-i w-saraḥt*[i] *kamaan ʃiwayya* I was going to ride as far as Tahrir Square, but changed my mind and went on a bit. ‖ *da saraḥ wi-baraḥ* ≈ he's come up in the world. - *saraḥit wi-maraḥit* she went her happy way, she lived it up. - vn *saraḥaan*; ava *saariḥ*.
سرحان *sarḥaan* /adj */ distracted, absent-minded.
سرح *siriḥ* /adj */ tall and straight.
سرّاح *sarraaḥ* /n */ **1** yarn-spinner. **2** daydreamer. — / adj */ **3** loose, free-living. ‖ *bitʿ sarraaḥa* an easy girl, a flirt. *mara sarraaḥa [coarse, abus]* an easy lay, a whore.
سرّيح *sarriiḥ* /n pl *sarriiḥa*/ **1** itinerant peddler. **2** braggart.
مسرح *masraḥ* (also *marsaḥ*[↓] *[obsol]*) /n pl *masaariḥ*/ **1** theatre. **2** stage. **3** theatre, theatrical art. *ʔil-masraḥ wis-sinima* stage and film.
مسرحي *masraḥi* /adj/ pertaining to the theatre or stage, theatrical.
مسرحيّة *masraḥiyya* /n pl *-aat*/ stage play.
سرّح *sarraḥ* /vt/ **1** to send out to pasture. *ʔiṣ-ṣubḥ*[i] *laazim tisarraḥ il-gamuusa* in the morning she has to put the buffalo out to pasture. **2** to send (peddlers, beggars etc.) out to work. *ʔil-miʕallim bi-ysarraḥ ʕiyaal sabarsagiyya* the boss sends kids out to work as cigarette-butt collectors. *ʔir-raagil sarraḥ miraat-u b-figl*[i] *w-kurraat* the man sent his wife out to hawk radishes and leeks. ‖ *misarraḥ miraat-u* having his wife working as a prostitute. **3** to tidy and arrange (the hair). *xallii-ha tsarraḥ faʕr-ik* (or *raas-ik*) let her do your hair. - vn *tasriiḥ*; ava/pva *misarraḥ*.
تسريحة *tasriiḥa* /n pl *-aat*/ **1a** instance noun of *tasriiḥ*. **1b** hair-do. **2** dressing table.
اتسرّح *ʔitsarraḥ* or *ʔissarraḥ* /vi/ **1** passive of *sarraḥ*. **2** to have one's hair done. - iva *mitsarraḥ*.

س ر خ
صرخ *sarax, ṣarax (u)* /vi/ to scream, cry out, shout. *faafit ig-gussa w-saraxit* she saw the corpse and screamed. *ḥamdi sarax ʕalee* Hamdi shouted to him. *sarax ir-raagil fi-wiff-u-hum* the man yelled at them. - vn *sarx, ṣarx, siriix, suraax, ṣuraax*; ava *saarix, ṣaarix*.
صرخ *sarx, ṣarx* /n/ screaming. ‖ *raas-i fiiha sarx* my head is ringing. - *rigl-i fiiha sarx* my leg hurts terribly.
صرخة *sarxa, ṣarxa* /inst n, pl *-aat, -aat*/ a scream, a cry, a shout.
صاروخ، ساروخ *saruux* or *ṣaruux* /n pl *sawariix*/ rocket. ‖ *lamba saruux* crude kerosene lamp of metal with no chimney (see Pl.B, 2).
صرّيخ *sarriix* /n/: *sarriix ibn*[i] *yomeen* /in neg context/ ≈ a living soul, as in *baṣṣeet yimiin wi-ʃmaal ma-laʔet-f*[i] *sarriix ibn*[i] *yomeen* I looked right and left but found not a living soul.
صرّخ *sarrax* or *ṣarrax* /vi/ to scream. - ava *misarrax, miṣarrax*.

[1] س ر د
سرد *sarad (u, i)* /vt/ to relate, narrate. *balaaʃ tisrid il-ḥikaaya mil-ʕawwil* don't tell the story from the beginning. - vn *sard, saradaan*; ava *saarid*; pva *masruud*.
اتسرد *ʔitsarad* or *ʔissarad* /vi/ to be related, be narrated. - iva *mitsirid*.
انسرد *ʔinsarad* = *ʔitsarad*. - iva *minsirid*.

[2] س ر د see ب ا ك : *sird*[i] *baak*

س ر د ا ب
سرداب *sirdaab* <P *sard-âb*> /n pl *saradiib*/ subterranean vault, cellar, basement.

س ر د ا ر
سردار *sirdaar* <P *sar-dâr*> /n/ *[obsol]* supreme commander, commanding general.

س ر د ق see س ر ا د ق : *suraadiq, suraadiq*

س ر د ل ل
سردلاّ *sardilla* <prob It *sardella*> /coll n/ Mediterranean fish (Sardinella aurita, Sardinella eba).
سردلاّية *sardillaaya* /unit n, pl *-aat*/ a fish of the *sardilla* species.

س ر د ى ن [1]
سردين *sardiin* /coll n/ **1** sardine(s). **2** Nile fish resembling sardines.
سردينة *sardiina* /pl *-aat*/ unit noun of *sardiin*.
سردينية *sardinaaya* = *sardiina*.

س ر د ى ن [2]
سوردينا *surdiina* <It *sordina*> /n pl *-aat*/ *[mus]* mute, sordino (for violin, cornet etc.).

س ر ر [1]
سرّ *sarr[1] (u)* /vt/ to please, make happy. ‖*ħaaga ma-tsurr[i]-ʃ la ɛaduw wala ħabiib* ≈ it shouldn't happen to a dog. - vn *suruur*; ava *saarir, saarir*; pva *masruur, masruur*.
سرور *suruur* /n/ pleasure, joy. *bi-kull[i] suruur* with the greatest pleasure, as in *ħ-aɛmil-haa-lak bi-kull[i] suruur* I'll be delighted to do it for you.
سرّاء *sarraaʕˀ* /n/ happiness, prosperity. *fis-sarraaʕ wiḍ-ḍarraaʕ* ≈ for better or for worse.
مسرّة *masarra* /n pl *-aat*/ joy, delight, pleasure, happiness. *nigii-lak dayman fil-masarraat* may we always visit you on happy occasions. ‖... *wa-fin-naas il-masarra [Chr]* ... good will towards men.
انسرّ *ʕinsarr* /vi/ to feel happy, glad or delighted. *ʕana b-ansarr[i] lamma b-aʃuuf-ak* I feel happy whenever I see you. - iva *minsarr*.

س ر ر [2]
سرّ *sarr[2] (i)* /vt/ **1** to entrust (a secret). *sarrit kilma f-widn-u* she told him something secret in his ear. **2** to withhold (a secret). *sarreet il-xabar fi-nafs-i* I kept the secret to myself. - ava *saarir*.
سرّ *sirr* /n pl *ʕasraar*/ **1a** secret. ‖*ʕil-biyuut ʕasraar* every house has its secrets. - *ɛaalim il-ʕasraar* Ommiscient (epithet of God). - *kaatim ʕasraar [mil]* secretary. - *kilmit is-sirr [mil]* password. - *sirr-ak fi-biir* ≈ (be sure) your secret will be well kept. - *ɋal-lu l-ɋill[i] w-taɛab is-sirr* to hell with him and what he said. **1b** spirit, inner being. *ɋult[i] f-sirr-i* I said to myself. *kilma f-sirr-ak* just a word in your ear. *ʕallaaħ yihaddi s-sirr* may God calm the (troubled) mind. *wi-fin-nihaaya ţiliɛ* (or *xarag*) *is-sirr il-ʕilaahi* ≈ at last, he died. **1c** spiritual power. *sirr-u baatiɛ* his spiritual power is effective. *fii sirr* he's psychic. **2a** (divine) mystery. ‖*yiwdaɛ sirr-u f-ʕaḍɛaf xalɋ-u* (God) may reveal Himself in the weakest of His creatures. **2b** *[Chr]* sacrament. *sirr il-iɛtiraaf* the sacrament of confession.
¶ *sirran* /adv/ privately, inaudibly. *ʕaħyaanan bi-nṣalli li-llaah sirran* we sometimes pray to God inaudibly (or privately).
سرّى *sirri* /adj/ **1** secret, confidential. *taɋariir sirriyya* confidential reports. *sirri lil-ɣaaya* top secret. ‖*ħibr[i] sirri* invisible ink. - *beet sirri* brothel. - *ʕamraaḍ sirriyya* venereal diseases. - *ʕil-ɛaada s-sirriya [euphem]* masturbation. **2** *[Chr]* **2a** mystical. *lahoot sirri* mystical theology. **2b** sacramental.
سريرة *sariira* /n pl *saraayir*/ mind, heart, conscience. *rabb-i-na ʕaɛlam bis-saraayir* God knows the heart of every one.
أسرّ *ʕasarr* = *sarr[2]*. - vn *ʕisraar*.

س ر ر [3]
سرّة *surra* (also *ṣurra*) /n pl *surar*/ **1** navel. *burtuɋaan ʕabu surra* (or *bi-surra*) navel oranges. *ħizaam surra* umbilical truss. **2** centre. *bet-hum fi-surrit il-balad* their house is located in the centre of the village. ‖*surrit ir-raffaaṣ [naut]* propeller post.
سرّى *surri* /adj */ umbilical. *ʕil-ħabl is-surri* umbilical cord.

س ر ر [4]
سرير *siriir* /n pl *saraayir*/ bed. ‖*siriir markib* stern bench of a boat.

س ر ا ق
سرّاق *sirraaɋ, sarraaɋ* <perh It *saracco*> /n pl *sarariiɋ*/ *[carp]* saw. *sirraaɋ timsaaħ* panel saw.

س ر ى ق
سرّيق *surreeɋ* /coll n/ chrysalis(es).
سرّيقة *surreeɋa* /unit n, pl *-aat*/ a chrysalis.

س ر س [1]
سرّس *sarras* /vi/ to become wormy, become weevily. *ʕig-gibna sarrasit* the cheese has become wormy. - vn *tasriis*; ava *misarras*.

س ر س [2]
سرس *sirs* /coll n/ rice awn(s).
سرسة *sirsa* /unit n, pl *-aat*/ a rice awn.
سرساية *sirsaaya* = *sirsa*.

³ س ر س see س ر ى س : *siriis*

س ر س ب
سرسب *sarsib* **1** /vt/ to cause to trickle, leak. *ʕiz-zikiiba fiiha xurm[i] bi-ysarsib il-ɣamḥ* the sack has a hole which lets the wheat trickle out. **2** /vi/ to dribble, trickle. *ʕil-ḥanafiyya bi-tsarsib* the tap is dripping. *ʕiḍ-ḍuyuuf gum sarsaba* the guests trickled in. - vn *sarsaba*; ava/pva *misarsib*.
سرسوب *sarsuub* /n/ **1** colostrum. **2** /pl *sarasiib*/ trickle. *ʕil-mayya nazla sarasiib* the water trickles down.
اتسرسب *ʕitsarsib* or *ʕissarsib* /vi/ **1** to be made to trickle, be leaked. **2** to trickle, leak. *ʕil-mayya ɣaɣadit titsarsib ṭuul il-leel* the water kept dripping all night. - vn *tisarsiib*; ava/iva *mitsarsib*.

س ر س ع
سرسع *sarsaɛ* /vi/ to sound shrill. *wi-hiyya b-titkallim bi-tsarsaɛ* she speaks in a shrill voice. - vn *sarsaɛa*; ava *misarsaɛ*.

س ر س و ع
سرسوع *sarsuuɛ* /coll n/ sissoo tree(s).

س ر س ى –
سرسيون *sirisyoon* /n/ a type of glue used to repair rubber and leather.

س ر ط ن
سرطان *saraṭaan* /n/ **1** /coll/ crab(s). **2** *ʕis-saraṭaan [astrol]* Cancer. **3** *[path]* cancer. ‖*saraṭaan il-ɣizaaz* deterioration of glass caused by heat or stress and leading to spontaneous shattering.

س ر ع
سرع *surɛ* /n pl *ʕasraaɛ*/ (set of) reins.
سرعة *surɛa* /n pl *-aat*/ **1** speed. *ʕil-ʕusṭawanaat liiha talat surɛaat* records have three speeds. *bi-surɛa* quickly. *ɣaddaad is-surɛa* speedometer. **2** *[auto]* gear. ‖*naɣl is-surɛaat il-ʕutumatik* automatic transmission.
سريع *sariiɛ* **1** /adj pl *suraaɛ*/ swift, fast, quick. *sariiɛ il-kasr* quick to break. *tayyaar sariiɛ it-taraddud [elec]* high frequency current. **2** *ʕis-sariiɛ* /n/ express train or bus.
أسرع *ʕasraɛ*[1] /el/ faster/fastest.
اتسرّع *ʕitsarraɛ* or *ʕissarraɛ* /vi/ to be too hasty, rush. *ʕana kull[i] ɣaṣd-i ʕinnak ma-kunt[i]-ʃ titsarraɛ* I only meant that you shouldn't have been hasty. - vn *tasarruɛ*; ava *mitsarraɛ*.
متسرّع *mutasarriɛ*↑ /adj */ rash, hasty, precipitate.

أسرع *ʕasraɛ*[2] /vi/ to speed up, accelerate. - vn *ʕisraaɛ*; ava *musriɛ*.

¹ س ر ف
أسرف *ʕasraf* /vi/ to go too far, be extravagant. *ʕinta ʕasraft[i] f-ɣitaab-u* you went too far in reprimanding him. - vn *ʕisraaf*; ava *musrif*.

² س ر ف
سرف *sirf* <Engl> /n pl *-aat*/ serve, service (e.g., in tennis).

س ر ف ل
سرفليه، سرفيليه *sarfileeh* <Fr *surfiler*> /n/ hem-stitching. ‖*maqaṣṣ[i] sarfileeh* pinking shears.
سرفل *sarfil* /vt/ to hem-stitch. - vn *sarfala*; ava/pva *misarfil*.
اتسرفل *ʕitsarfil* or *ʕissarfil* /vi/ to be hem-stitched. - vn *tisarfiil*; iva *misarfil*.

¹ س ر ف ى س see also س ر و س
سرفيس *sarviis* or *sirviis* <Fr *service*> /n/ **1a** (also *ṭaqm[i] sarviis*) set of china. **1b** (also *ṣaḥn[i] sarviis*) serving platter. **1c** dining implements, table setting (china, silver, napkins etc.). *ʕaḥuṭṭ[i] sirviis li-kaam* how many shall I lay the table for? ‖*ṭarabeezit sarviis* dumb waiter, auxiliary serving table. **2** locker.

س ر ف ى م
سيرافيم *sirafiim* <Heb> /pl n/ *[Chr]* seraphim.

– س ر ف ى see س ر ف ل : *sarfileeh*

¹ س ر ق
سرق *saraq (a)* /vt/ **1** to steal. *saraqu ghaaz tasgiil wi-ʃwayyit hiduum* they stole a tape-recorder and a few clothes. *bi-yisraq il-kuḥl[i] min il-ɣeen* he could steal the kohl from your eyes! *ʕilli ɣawiz yisraq gamal yiḥaḍḍar-lu kimaama [prov]* (he who wants to steal a camel should have a muzzle ready for it) ≈ good planning ensures success. *ʕin saraqt israq gamal [prov]* (if you steal, steal a camel) ≈ if you must steal take something worthwhile. ‖*wiʃʃ-a-ha yisraq il-ɣeen* her face captivates the eye. *-sarqaa s-sikkiin* ≈ he's lost touch with reality, he lives in a world of false hopes. *-door masruuq* mezzanine, entresol. *-ruḥt[i] masruuq min wiṣṭiihum rawwaḥt[a] ɣal-beet* ≈ I slipped away from their company and went home. **2** to rob. *saraqu bank[i] w-hirbu* they robbed a bank and got away. *saraqt-u f-qirf[i] saar* I robbed him of a piastre. ‖*bi-yisraq fil-liɛb*

he cheats at the game. - vn *sirqa*; ava *saariq*; pva *masruuq*.
سرقة *sirqa* **1** /n pl *sariqaat*/ theft, robbery. *sirqa bil-ʕikraah* armed robbery. **2** /adv/ stealthily. *rawwaḥ sirqa* he went home without anyone noticing. *bi-yaakul sirqa* he eats on the sly.
مسروقات *masruqaat* /pl n/ stolen goods.
سريقة *siriiqa* /n pl *-aat*/ = *sirqa*.
اتسرق *ʔitsaraq* or *ʔissaraq* /vi/ **1** to be stolen. *ʕarabiyyit-i tsaraqit miʃ-ʃaariʕ* my car was stolen off the street. **2** to be robbed. *beet-i tsaraq* my house has been burgled. **3** to steal away. ‖ *ʔitsaraqit mil-beet min ʏeer ma ḥaddi ʃaf-ha* she sneaked out of the house unseen by anybody. - ava/iva *mitsiriq*.
انسرق *ʔinsaraq* = *ʔitsaraq*. - ava/iva *minsiriq*.

س ر ق[2] see س ر ر ا ق: *sirraaq, sarraaq*

س ر ق[3] see س ر ر ى ق: *surreeq, surreeqa*

س ر ك[1]
سيرك *sirk, sark* <Fr *cirque*> /n/ circus.

س ر ك[2]
سركي *sarki* <T *sergi*> /n pl *saraaki*/ register book for messenger-delivered dispatches. *sallim-hum ig-gawabaat ʕas-sarki* have them sign for their letters in the mail-delivery book.
سرّك *sarrak* /vt/ to register (mail, dispatches or official letters) in the register book. - vn *tasriik*; ava/pva *misarrak*.
اتسرّك *ʔitsarrak* or *ʔissarrak* /vi/ passive of *sarrak*. - iva *mitsarrak*.

س ر م ح
سرمحة *sarmaḥa* /vn/ loitering, loafing.
سرماح *sirmaaḥ* /n */ loiterer, loafer.
اتسرمح *ʔitsarmaḥ* or *ʔissarmaḥ* /vi/ to loaf around, loiter about. *ʔatsarmaḥ fiʃ-ʃawaariʕ w-ahallis ʃiwayyiteen* I'm going to hang around the streets and chase some crumpet. - ava *mitsarmaḥ*.

س ر ن see س ر ى ن: *sariina*

س ر ن ج
سرنجة *siringa* <It *siringa*> /n pl *-aat*/ syringe.

س ر و[1]
سرو *sarw* /coll n/ evergreen cypress. *xaʃab sarw* cypress wood.
سروة *sarwa*[1] /n pl *-aat*/ **1** /unit n/ a cypress. **2** a panel shaped like a diamond with one elongated point, used in *ḥaʃw baladi* (see Pl.G, 10).

س ر و[2]
ثروة *sarwa*[2] /n/ **1** wealth, abundance. *ma-yhimm-i-nii-ʃ il-maal wis-sarwa* I don't care about money and riches. *yaklu fis-sana sarwa min il-qamḥ* they consume an enormous quantity of wheat in a year. **2** /pl *-aat*/ treasure. *sarwaat tarixiyya* historical treasures.

س ر و س see also س ر ف ى س
سرويس *sarwiis* <Fr *service*> /n pl *sarawiis*/ **1a** (also *ṭaqm sarwiis*) set of china. **1b** (also *ṣaḥn sarwiis*) serving platter. **2** government telegram, official telegram sent at the expense of a government department.
سروس *sarwis* /vt/ to serve. *ʕayz-ak tisarwis il-ḥilw dilwaqti* I want you to serve the dessert now. - vn *sarwasa*; ava/pva *misarwis*.
اتسروس *ʔitsarwis* or *ʔissarwis* /vi/ passive of *sarwis*. *ʔil-ʕaʃa tsarwis* dinner has been served. - iva *mitsarwis*.

س ر و ل
سروال *sirwaal* (also *ʃirwaal*) /n pl *sarawiil*/ **1** loose breeches or trousers gathered at the waist and very full in the seat (worn by men of the Mediterranean coast). **2** loose pantaloon-type trousers worn by the more traditional women of the Egyptian countryside.
مسرول *misarwil: ḥamaam misarwil* variety of pigeon which has feathers on its legs.

س ر ى[1]
سرى *sara (i)* /vi/ **1** to apply, be applicable. *ʔil-qanuun da ma-yisrii-ʃ ʕalee* this law doesn't apply to him. **2** to spread. *ʔil-ʔalam bi-yisri f-kulli gism-i* the pain spreads all over my body. *ḥubb-a-ha b-yisri f-damm-u* love for her runs in his blood. *ʔiṣ-ṣoot bi-yisri fil-leel wid-dinya sakta* ≈ the sound carries at night when all is silent. ‖ *maṭraḥ ma yisri yimri* ≈ may it do you good! (to a guest after eating). - vn *sarayaan, sarayaan*; ava *saari*.
ساري *saari*[2] /adj/ **1** operational, operative. ‖ *saari l-mafʕuul* valid, in force. **2** rampant (of, e.g., a contagious disease).
سريّة *sariyya* /n pl *saraaya, sariyyaat/ [mil]* company of soldiers.
إسراء *ʔisraaʔ↑, ʔisra: ʔisraaʔ in-nabi, ʔal-ʔisraaʔ (wal-miʕraag) [Isl]* the Prophet Muhammad's night journey to Jerusalem (and the seven heavens).

س ر ي [2]
سرّى *sarra* /vt/ to dispel, drive away (sorrow, worries). *nukat-u sarrit ɛan qalb-i l-humuum* his jokes dispelled the worries from my heart. - vn *tasriyya*; ava *misarri*.
اتسرّى *ʔitsarra* or *ʔissarra* /vi/ passive of *sarra*. *raaḥ sinima wi-humuum-u tsarrit ɛannu* he went to the cinema and her troubles were dispelled. - iva *mitsarri*.

(س ر ي) [3]
سارية *sarya* /n pl *sawaari*/ flagpole.
سرية *sirya* <It *serie*> /n pl *-aat*/ *[elec]* series.
الثريّا *ʔis-surayya* /prop n/ *[astron]* the Pleiades.

س ر ي [4] see س و ر [4] : *surya*

س ر ي [5] see س ا ر ي : *saari*[1]

س ر ي [6] see س ر ا ي : *saraaya*

س ر ي ا ل
سريالى *siryaali*↑ <Fr *surréal*> /adj/ surrealist.

س ر ي س
سريس *siriis* /coll n/ chicory.

س ر ي ن
سرينة *sariina* <It *sirena*> /n pl *sarayiin*/ siren.

س ز ا ل
سيزال *sizaal* <Fr> /n/ sisal (hemp). - also *sayzal*.

س ز ب
سذاب *sazaab* /coll n/ rue, herb of grace (used in folk medicine). - also *sadaab*.
سذب *sazab* = *sazaab*. - also *sadab*.

س ز ج
سذاجة *sazaaga* /n/ innocence, naiveté.
ساذج *saazig, saazag* /adj * and pl *suzzaag*/ innocent, naive.

س ز ل see س ز ا ل : *sizaal*

س ز ن ا ك
سزناك *suznaak* <P *soznâk*> /n/ *[mus]* mode in Arabic music beginning on C and having E half flat and A flat.

س س ب ا ن
سيسبان *sasabaan, sisibaan, saysabaan*↑ <P *sîsabân*> /coll n/ sesban, Danchi plant.
سيسبانة *sasabaana, sisibaana* /unit n, pl *-aat*/ a sesban plant.

س س ت
سوستة *susta* <It *susta*> /n pl *susat*/ **1** spring. *susat il-ɛarabiyya* (car) suspension. ‖*susat kubbaaya* telescopic suspension (motorcycle). - *walad susta* nimble, agile boy. - *mitr*[i] *susta* self-winding tape-measure. **2** zip fastener.

س س ي س
سوسيس *susiis* <Fr *saucisse*> /coll n/ sausage(s).
سوسيسة *susiisa* /unit n/ a sausage.
سوسيسايّة *susisaaya* = *susiisa*.

س ش و ا ر
سشوار *sifwaar* <Fr *séchoir*> /n pl *-aat*/ (hair) dryer.

س ط ب see م ص ط ب : *maṣṭaba*

س ط ح
سطح *saṭaḥ* **(a)** /vt/ to flatten, spread out flat. *ḍarab-u w-saṭaḥ-u* he knocked him flat. - vn *saṭḥ*; ava *saaṭiḥ*; pva *masṭuuḥ*.
سطح *saṭḥ, suṭḥ* /n pl *suṭuuḥ, ʔasṭuḥ, ʔusṭuḥ*/ **1** surface. *saṭḥ il-mayya* (1) the surface of the water. (2) sea level. **2** deck (of a ship). **3** /pl *suṭuuḥ* used interchangeably with sing/ flat rooftop. *fooq is-suṭuuḥ* on the roof. *ʔil-ɣasiil manfuur ɛas-saṭḥ* the washing is hung on the roof. **4** /pl *ʔasṭuḥ* only/ *[geom]* plane.
سطحى *saṭḥi* /adj/ **1** pertaining to the surface. *riyaaḥ saṭḥiyya* surface winds. **2** superficial, shallow. *guruuḥ saṭḥiyya* superficial injuries. *lamḥa saṭḥiyya* a superficial glance.
سطحيّة *saṭḥiyya*↑ /n/ superficiality.
مسطوح *masṭuuḥ* /adj */ flat, shallow. *ṭabaq masṭuuḥ* dinner plate.
سطيح *siṭiiḥ, saṭiiḥ* /adv/ prostrate. *wiqiɛ ɛal-ʔarḍ*[i] *sṭiiḥ* he fell sprawling. ‖*raaqid siṭiiḥ* he's lying ill, he's lying helpless.
سطيحة *siṭiiḥa* = *siṭiiḥ*. *naayim siṭiiḥa* sleeping like a log.
مسطاح *misṭaaḥ, musṭaaḥ* /n/ land between the river's edge and the corniche.
اتسطح *ʔitsaṭaḥ* or *ʔissaṭaḥ* /vi/ to be flattened. - iva *mitsiṭiḥ*.
انسطح *ʔinsaṭaḥ* = *ʔitsaṭaḥ*. - iva *minsiṭiḥ*.
سطّح *saṭṭaḥ* /vt/ **1a** to flatten, level. *ʔawwil ḥaaga bi-nsaṭṭaḥ il-malɛab* first we level the pitch. **1b** to spread out flat, lay out flat. *saṭṭaḥ-li l-ɛayyil* lay the baby flat on his back for me. **2** to measure the surface

area of. *saṭṭaḥ iṣ-ṣaqqa* he measured the floor area of the flat. — /vi/ **3** to ride on the roof of a train (to avoid paying the fare). **4** to lie down (for a rest). *ruuḥ saṭṭaḥ-lak ʃiwayya* go and lie down for a while. - vn *tasṭiiḥ*; ava/pva *misaṭṭaḥ*.

مسطّح *musaṭṭaḥ* /adj */ **1** flat. *qadam musaṭṭaḥa* flat foot. — /n pl *-aat*/ **2** flat surface. *musaṭṭaḥ bi-ʕagal ʕaʃaan yinaam ʕalee ʕaamil taḥt il-ʕarabiyya* a platform with wheels for a worker to lie on under the vehicle. **3** *[geom]* plane. **4** *[constr]* surface area.

اتسطّح *ʔitsaṭṭaḥ* or *ʔissaṭṭaḥ* /vi/ **1** to lie prone. *ḥ-atsaṭṭaḥ ʃiwayya* I'm going to stretch out for a while. **2** passive of *saṭṭaḥ* 1 and 2. - ava/iva *mitsaṭṭaḥ*.

س ط ر [1]

سطر *saṭr* /n pl *suṭuur, ʔasṭur*↑/ **1** row. *niruṣṣ-a-ha suṭuur suṭuur* we arrange them in rows. **2** line. ‖ *kurraas saṭr*ⁱ *w-saṭr* exercise book with widely spaced lines.

مسطرة *masṭara* /n pl *masaaṭir*/ **1** ruler. **2** *[text]* wooden track for a pick (on a loom). **3** facing for the neck opening of a garment. **4** metal strip which stabilizes the tuning of the strings of an *qanuun* (see Pl.J, 24).

أسطورة *ʔusṭuura, ʔasṭuura* /n pl *ʔasaṭiir*/ myth, fable, legend.

سطّر *saṭṭar* /vt/ **1** to compose and write down. *saṭṭar-lu gawaab* he wrote him a letter. ‖ *waʕdⁱ wi-msaṭṭar ʕal-gibiin* man's fate is written on his face. **2** to rule, draw lines on. *bi-nsaṭṭar il-waraq* we rule lines on the paper. - vn *tasṭiir*; ava/pva *misaṭṭar*.

اتسطّر *ʔitsaṭṭar* or *ʔissaṭṭar* /vi/ passive of *saṭṭar*. - iva *mitsaṭṭar*.

س ط ر [2]

ساطور *saṭuur* /n pl *sawaṭiir*/ meat cleaver. - also *ʃaṭuur*.

س ط ر [3] see — م س ط ر : *masṭareen, masṭariin*

س ط ط

سطّ *saṭṭ (u)* /vt and vi/ to hit, strike hard. *ʔiṭ-ṭuuba saṭṭit-ni f-qurt-i* stone hit me on my forehead. *ʔil-ʕarabiyya saṭṭit fil-ḥeeṭa* the car smashed into the wall. - vn *saṭṭ*; ava *saaṭiṭ*; pva *masṭuuṭ*.

سطّة *saṭṭa* /inst n, pl *-aat*/ a hit, a crash, a collision.

اتسطّ *ʔitsaṭṭ* or *ʔissaṭṭ* /vi/ passive of *saṭṭ*. - iva *mitsaṭṭ*.

انسطّ *ʔinsaṭṭ* = *ʔitsaṭṭ*. - iva *minsaṭṭ*.

س ط ع

سطع *saṭaʕ (a)* /vi/ to shine brightly. - vn *suṭuuʕ*; ava *saaṭiʕ*.

ساطع *saaṭiʕ* /adj/ bright, radiant.

س ط ل [1]

سطل *saṭal (i)* /vt/ **1** to intoxicate. **2** to drug, dope. - vn *saṭl, saṭalaan*; ava *saaṭil*; pva *masṭuul*.

سطلة *saṭla* /inst n, pl *-aat, suṭal*/ a trip, a 'high'.

مسطول *masṭuul* /adj * and pl *masaṭiil*/ intoxicated, drugged, doped.

سطل *suṭal* **1** /n/ any intoxicating agent. **2** /adj invar/ **2a** doped, stoned, high. **2b** intoxicated, drunk.

اتسطل *ʔitsaṭal* or *ʔissaṭal* /vi/ to be or become intoxicated. - ava/iva *mitsiṭil*.

انسطل *ʔinsaṭal* = *ʔitsaṭal*. - ava/iva *minsiṭil*.

سطّل *saṭṭal* **1** /vt/ to dope with *suṭal*. **2** /vi/ to take, or be under the effect of, *suṭal*. - vn *tasṭiil*; ava/pva *misaṭṭal*.

س ط ل [2]

سطل *saṭl* /n pl *ʔisṭaal, suṭúla, suṭuul*/ **1** bucket. **2** tin mug.

س ط و

سطا *saṭa (i)* /vi/ to break and enter, commit burglary. *ʔit-taʔmiin ḍidd is-saṭw* insurance against burglary. - vn *saṭw, saṭayaan*; ava *saaṭi*.

سطوة *saṭwa* /n/ influence, authority, power.

اتسطى *ʔitsaṭa* or *ʔissaṭa* /vi/ (impersonal) passive of *saṭa*. *ʔil-xazna tsaṭa ʕaleeha* the safe was burgled. - iva *mitsiṭi*.

س ع see و س ع : *siʕaʔ*

س ع ت ر

سعتر *saʕtar* /n/ thyme. - also *zaʕtar*.

س ع د [1]

سعد *siʕid (a)* /vi/ **1** to become happy. *siʕidtⁱ b-muqablit-ak* it has been a pleasure to meet you. **2** to be fortunate in material gain. *min gaawir is-saʕiid yisʕad [prov]* or *ḥuṭṭⁱ rigl-ak maṭraḥ rigl is-saʕiid tisʕad [prov]* stick close to a rich man and you too will have luck. - vn *saʕd*.

سعد *saʕad (i)* /vt/ **1** to make happy. *ʔig-gawaaza saʕadit-ni qawi* the marriage made me very happy. ‖ *yisʕid ṣabaaḥ-ak* ≈ good morning to you (in response to *ṣabaaḥ il-xeer* etc.). **2** to make fortunate. *ʔin saʕad-ni zamaan-i ḥa-tirsi ʕalayya l-munaqṣa* if things go well I should get the tender. - vn *saʕd*; ava *saaʕid*; pva *masʕuud*.

سعد *saʕdⁱ* /n/ **1** happiness. **2** good fortune. *kaan qadam saʕdᵃ ʕaleehum* he brought them good luck. *min saʕd-i-na nnak geet* luckily for us, you've come!

السعديّة *ʔis-saʕdiyya* /prop n/ Sufi order.

ساعد *saaʕid*[1↑] /n pl *sawaaʕid*/ forearm.
أسعد *ʔasʕad*[1] /el/ more/most happy, fortunate etc.
سعادة *saʕaada* /n/ **1** happiness. **2** /in construct with pron suff or title/ respectful title, or form of address, or reference. *saʕadt-ak ʕaayiz ʔeeh* ≈ what do you want, sir? *saʕaadit il-beeh* ≈ his Excellency the Bey (also used jokingly and cynically).
سعود *suʕuud* /pl n/ good fortune, prosperity. *saʕd is-suʕuud* ≈ utmost happiness.
سعيد *saʕiid* /adj pl *suʕada*/ **1** happy. *hiyya ḥa-tkuun saʕiida maʕaa* she will be happy with him. **2** fortunate, lucky (especially in material gain). *ʔis-saʕiid kull in-naas tixdim-u [prov]* everyone wants to do a rich man a service.
سعيدة *saʕiida* /interj/ a salutation given either on joining or leaving someone's company ≈ hello, good-bye.
اتسعد *ʔitsaʕad* or *ʔissaʕad* /vi/ to be blessed with good fortune. - iva *mitsiʕid*.
انسعد *ʔinsaʕad* = *ʔitsaʕad*. - iva *minsiʕid*.
ساعد *saaʕid*[2] **1** /vt/ to help, assist. *miraat-i nizlit tisaʕd-u f-ʔira l-ḥaaga* my wife went to help him buy things. *saʕidnaa ʕala saḥb il-ɣariiq* we helped him pull the drowning man out. ‖ *ʔustaaz musaaʕid [acad]* associate professor. - *mawaddi musaʕda [chem]* catalysts. **2** /vi/ to give help, give assistance. - vn *musaʕda*; ava *musaaʕid*.
مساعدة *musaʕda* /n pl *-aat*/ help, assistance. *ʔayyi musaʕda* do you need any help?
مساعد *musaaʕid* /n */ **1** assistant, aide. **2** *[auto]* shock absorber.
اتساعد *ʔitsaaʕid* or *ʔissaaʕid* /vi/ to be helped, be assisted. - iva *mitsaaʕid*.
أسعد *ʔasʕad*[2↑] = *saʕad*. - vn *ʔisʕaad*; ava *musʕid*.
مسعد *musʕad*[↓], *misʕid*[↓] /adj */ born lucky.

[2] س ع د
سعد *saʕd*[2], *siʕd*, *suʕd* /coll n/ plant(s) of the sedge family, particularly Cyperus longus, Cyperus rotundus.
سعدة *siʕda* /pl *-aat*/ unit noun of *saʕd*[2].
سعداية *siʕdaaya* = *siʕda*.

[3] س ع د see س ع و د: *suʕuudi*, *saʕuudi*, *siʕuudi*, *ʔis-suʕudiyya*, *ʔis-saʕudiyya*, *ʔis-siʕudiyya*, *saʕwid*, *ʔitsaʕwid*

[1] س ع ر
سعر *siʕr* /n pl *ʔasʕaar*/ price. *ʔasʕaar il-fakha wil-xuḍaar* the prices of fruit and vegetables. *mif ḥa-ybiiʕ bis-siʕr il-maʕquul* he won't sell at a reasonable price. ‖ *siʕr il-fayda* rate of interest.
سعّر *saʕʕar* /vt/ **1** to price, set a price for. *saʕʕar-li l-kimmiyya di min faḍl-ak* give me a price for this quantity, please. **2** to attach worth or value to. *ma-ysaʕʕar-ak-ʃ* he has no respect for you. - vn *tasʕiir*; ava/pva *misaʕʕar*.
تسعيرة *tasʕiira* /n/ officially fixed price (of a given commodity). *bi-ybiiʕ-u bit-tasʕiira* he sells it at its fixed price.
مسعّر *misaʕʕar, musaʕʕar* /adj/ officially priced.
اتسعّر *ʔitsaʕʕar* or *ʔissaʕʕar* /vi/ passive of *saʕʕar*. - iva *mitsaʕʕar*.

[2] س ع ر
سعر *siʕir, suʕur (a)* /vi/ to become rabid (of an animal). - vn *saʕar*; ava *saʕraan*.
سعر *saʕar*[1] *(i)* /vt/ to infect (an animal) with rabies. ‖ *masʕuur fil-ʔakl* eating ravenously. - vn *saʕaraan*; ava *saaʕir*; pva *masʕuur*.
سعر *saʕar*[2] /n/ rabies.
سعران *saʕraan* /adj/ rabid (of animals). see further under س ع ر ن
اتسعر *ʔitsaʕar* or *ʔissaʕar* /vi/ **1** to become rabid. **2** to get in a frenzy. - ava *mitsiʕir*.

[3] س ع ر
سعر *suʕr* /n pl *aat*/ calorie.

س ع ر ن see also [2] س ع ر
سعرن *saʕran* **1** /vt/ to infect (an animal) with rabies. **2** /vi/ to become rabid (of an animal). - vn *saʕrana*; ava/pva *misaʕran*.
اتسعرن *ʔitsaʕran* or *ʔissaʕran* /vi/ to become rabid (of an animal). - ava *mitsaʕran*.

[1] س ع ف
سعف *saʕaf*[1] *(i)* /vt/ **1** to render an urgently needed service to, rush to assist. *ʔil-muhimm*[i] *dilwaqti tisʕifuu-ni b-ṣuurit il-muzakkira* the important thing now is for you to rush me the copy of the memo. *ʔisʕifii-ni b-luqma* - *ʔana mistaʕgil* give me a quick bite - I'm in a hurry. **2** /in neg contexts/ to be sufficient for. *ʔil-waqt*[i] *btaaʕ il-birnaamig mif ḥa-yisʕif-na l-kull-i-da* programme time won't allow us to do all that. - vn *saʕafaan*; ava *saaʕif*; pva *masʕuuf*.
أسعف *ʔasʕaf*[1] = *saʕaf*. - vn *ʔisʕaaf*; ava *misʕif*.
إسعاف *ʔisʕaaf* /n/ **1** /pl *-aat*/ urgently-needed assistance. *lamma ʔakuun ʕaayiz ʔalḥaq ʔaṭr*[i] *yibqa t-taks*[i] *ʔisʕaaf liyya* when I want to be in time for a train a taxi is what I really need. ‖ *(ʕarabiyyit) ʔisʕaaf* ambulance. - *ʔisʕafaat (ʔawwaliyya)* first aid. **2** *ʔil-ʔisʕaaf* /no pl/

2a the First Aid Organization, the Red Crescent. **2b** specifically, the First Aid Centre on Ramses Street.

² س ع ف
سعف *saɛaf*² /coll n/ palm frond(s). *ɧadd is-saɛaf [Chr]* Palm Sunday. - also *zaɧaf, zaɛaf*.

س ع ل
سعل *saɛal (i)* /vi/ to cough. - vn *suɛaal*; ava *saaɛil*.
سعال *suɛaal* /n/ cough. *suɛaal diiki* whooping cough.
سعلة *saɛla* /inst n, pl *-aat*/ a cough.
سعلة *siɛla*↓ /n/ a cough.

س ع و د
سعودى *suɛuudi, saɛuudi, siɛuudi* **1** /adj */ Saudi. **2** /n */ a Saudi.
السعوديّة *ʃis-suɛudiyya, ʃis-saɛudiyya, ʃis-siɛudiyya* /prop n/ Saudi Arabia.
سعود *saɛwid* /vt/ to Saudi-ize. - vn *saɛwada*; ava/pva *misaɛwid*.
اتسعود *ʃitsaɛwid* or *ʃissaɛwid* /vi/ to be or become Saudi-ized. - ava/iva *mitsaɛwid*.

¹ س ع ى
سعى *saɛa (a)* /vi/ **1** to make an effort. *ɧ-asɛaa-lak fi-fuɤla* I'll endeavour to find you a job. *ʃisɛa ya ɛabd*ⁱ *w-ʃana ʃasɛa maɛaak [prov]* ≈ God helps those who help themselves. ‖*ʃakar allaahu saɛy-a-kum* may God repay your effort (in reply to funeral condolences). **2** *[Isl]* to perform the *saɛy*. - vn *saɛy*; ava *saaɛi*.
¶ *ʃisɛa* /fem *ʃisɛi*, pl *ʃisɛu*/ please speed up, please walk a little faster! (to someone holding up one's progress in a crowd).
السعى *ʃis-saɛy* /n/ *[Isl]* the ceremony of running between Safa and Marwa seven times (as part of the pilgrimage ritual).
ساعى *saaɛi* /n pl *suɛaah*/ office boy, office messenger. ‖*saaɛi busṭa* (or *bariid*) postman.
مسعى *masɛa* /n pl *masaaɛil*/ effort. *masaaɛi ɧamiida* commendable efforts. *ʃallaah yinaggaɧ masɛaa-k* God grant you success in your undertaking.

² س ع ى see ع ى س: *saaɛa*², *ʃitsaaɛa*

س غ ر
ثغر *saɤr*↑ /n pl *suɤuur*/ seaport.
ثغرة *saɤra* /n pl *-aat*/ gap, breach, loophole.

¹ س ف ح
سفح *safaɧ (a)* /vt/ **1** to shed, spill (blood). *w-allaahi l-asfaɧ damm-ak* ≈ by God, I'm going to kill you! **2** to snatch, swipe, grab. *safaɧit il-ɋirfeen illi ɧilt-i* she swiped everything I had. *safaɧ il-ʃakl* he wolfed down the food. **3** = *safax*. - vn *safɧ*; ava *saafiɧ*; pva *masfuuɧ*.
سفّاح *saffaaɧ* /n */ **1** killer, murderer. **2** person without scruples, swindler. - also *saffaak*.
اتسفح *ʃitsafaɧ* or *ʃissafaɧ* /vi/ passive of *safaɧ*. - iva *mitsifiɧ*.

² س ف ح
سفح *safɧ* /n pl *sufuuɧ*/ foot (of a hill or mountain).

س ف خ
سفخ *safax (a)* /vt/ to strike, deal a blow to. *safax-ha ɛalɋa nɋiifa* he gave her a sound thrashing. *safax-u ɋalam suxn* he slapped him hard in the face. - also *safaɧ, safaɛ*. - vn *safx*; ava *saafix*; pva *masfuux*.
اتسفخ *ʃitsafax* or *ʃissafax* /vi/ passive of *safax*. - iva *mitsifix*.

س ف خ س
سفوخس *sufuxs* /interj/ pooh! *sufuxs*ᵃ *ɛaleek* pooh to you!

¹ س ف ر
سفر *safar* /n/ travel(ling). *ʃis-safar bil-ɋaṭr*ⁱ *ɧilw* it's pleasant to travel by train. *ʃis-safar min hina lil-ʃuɋṣur yaaxud ɋadd*ⁱ *ʃeeh* how long does the journey take from here to Luxor? *safar-u ṭaal sana* he was away travelling for a year. ‖*miina s-safar* port of embarkation.
سفريّة *safariyya* /n pl *-aat*/ trip, journey. *kaanit safariyya ɧilwa* it was a lovely trip. *maktab safariyyaat* travel office.
سفارة *sifaara* /n pl *-aat*/ embassy.
سفير *safiir* /n pl *sufara*/ ambassador.
سفّر *saffar* /vt/ **1** to send off on a journey, dispatch. *ɧ-asaffar-ak barra tiftiri ɧagaat* I shall send you abroad to buy things. **2** *[naut]* to clear (a ship). - vn *tasfiir*; ava/pva *misaffar*.
اتسفّر *ʃitsaffar* or *ʃissaffar* /vi/ passive of *saffar*. - iva *mitsaffar*.
سافر *saafir* /vi/ to travel, go on a journey. *waaɧid minhum bi-ysaafir lil-xaarig* one of them travels abroad. *safirtⁱ maṣr* I went to Egypt. *fuʃaad saafir il-ɛizba n-nahar-da* Fuad went to the farm today. - vn *misafra*; ava *misaafir*.
مسافر *misaafir, musaafir* /n */ traveller. ‖*ʃooḍit misafriin* front parlour, sitting room. - *musaaɛid musaafir [joc]* railway porter.

س ف ر [2]
سفرة *sufra*[1] /n pl *sufar*/ dining table, dining suite. ‖ *ʕoodit sufra* dining room. - *sufra dayma* ≈ may your table always be laden (expression of thanks for a meal).
سفرجي *sufragi* /n pl *-yya*/ waiter, a servant who waits at table.

س ف ر ( ) [3]
سفرة *sufra*[2] /n pl *sufar*/ **1** piston driving a balance hammer (in a watch). **2** yoke (of a garment). **3** *[coarse slang]* anus, arsehole.
سفر *sifr*[1]↑ /n pl *ʔasfaar*/ book (of the Bible).
سفيرة *sufeera* or *sifeera: ʕis-sufeera ʕaziiza* **1** name of a beautiful well-born lady of legend; now used ironically, as in *fakra nafs-a-ha miin - ʕis-sufeera ʕaziiza* ≈ who does she think she is, the Queen of Sheba? **2** a kind of diorama showing scenes from traditional stories for children.

س ف ر [4] see ص ف ر [3] : *sifr*[2]

س ف ر ج ل
سفرجل *safargal* /coll n/ quince(s).
سفرجلة *safargala* /unit n, pl *-aat*/ a quince.

س ف ر و ت
سفروت *safruut* /n pl *safariit*/ little rascal.

س ف س ف
سفسف *safsif* /vi/ to talk nonsense. - vn *safsafa*; ava *misafsif*.
سفسفة *safsafa* /n pl *safaasif*/ silly talk, nonsense.

س ف ط
سفط *safaṭ (u)* /vt/ **1** to emaciate, make lean or gaunt. *ʕil-humuum safaṭit wiff-u* worries have made his face gaunt. **2** to dry up, shrivel. *ʕif-fams*[i] *safaṭit il-lamuun* the sun has dried up the lemons. **3** to suck in, contract, flatten. *safaṭit baṭn-a-ha ʕafaan tiwarri ʔinnaha muʃ ḥaamil* she drew in her stomach to show she was not pregnant. – /vi/ **4** to become drawn or gaunt (of face, cheeks etc.). **5** to dry up, shrivel, diminish in size. ‖ *baṭn-i safaṭit mig-guuʕ* I feel famished. - vn *saft, safaṭaan*; ava *saafiṭ*; pva *masfuuṭ*.
مسفوط *masfuuṭ* /adj */ drawn, gaunt, haggard.
سفطان *safṭaan* /adj/ **1** drawn, gaunt, haggard. **2** shrivelled, dried up.
اتسفط *ʔitsafaṭ* or *ʔissafaṭ* /vi/ **1** to become drawn or gaunt. **2** to shrivel, diminish in size. - ava *mitsifiṭ*.
انسفط *ʔinsafaṭ* = *ʔitsafaṭ*. - ava *minsifiṭ*.
سفّط *saffaṭ* = *safaṭ*. - vn *tasfiiṭ*; ava/pva *misaffaṭ*.
اتسفّط *ʔitsaffaṭ* or *ʔissaffaṭ* = *ʔitsafaṭ*. - iva *mitsaffaṭ*.

س ف ع
سفع *safaʕ (a)* /vt/ to strike, hit. *safaʕt-u ʠalam* I slapped him in the face. - also *safaḫ*[3], *safax*. - vn *safʕ*; ava *saafiʕ*; pva *masfuuʕ*.
اتسفع *ʔitsafaʕ* or *ʔissafaʕ* /vi/ to be struck, be hit. - iva *mitsifiʕ*.

س ف ف
سفّ *saff (i)* /vt/ **1** to eat rapidly, gobble. *saff il-ɤadwa w-miʃi* he wolfed down his lunch and left. ‖ *ʕandi ʒazma b-tirtir bi-tsiff*[i] *traab* I have a pair of shoes with sequins that pick up the dust like anything. - *saffeet turaab fig-geef* I had a tough time in the army. - *ʔil-ḫuṣaan saff il-ligaam* the horse bolted. **2** to consume in extravagant quantities. *ʔil-ʕarabiyya bi-tsiff*[i] *banziin* the car just laps up petrol. *ʔil-ʕamaliyya bi-tsiff*[i] *fluus kitiir* the process is enormously expensive. **3** to purloin (money). *saff*[a] *ḫaqq ig-gamʕiyya w-saafir* he stole the savings-club kitty and went abroad. - vn *saff, safafaan*; ava *saafif*; pva *masfuuf*.
سفوف *sufuuf* /n/ medicinal powder taken orally.
سفيّف *sufayyif* /adj */ **1** tiny, minute. **2** shrimpy, scrawny.
سفّاف *saffaaf* /n */ grafter.
اتسفّ *ʔitsaff* or *ʔissaff* /vi/ passive of *saff*. - iva *mitsaff*.
انسفّ *ʔinsaff* = *ʔitsaff*. - iva *minsaff*.
سفّف *saffif* /vt/ **1** to cause to consume in extravagant quantities. *saffifuu-na ʔakl*[i] *l-ɤaayit ma ṭafaḫna* they stuffed us with food until we were ready to burst. ‖ *saffif-ni ṭ-turaab* he gave me a hell of a time. **2a** to make (s.o.) eat or swallow. ‖ *saffift-u kaam laḫluuḫ* I slipped him a few pounds as a bribe. **2b** to administer a dosage of *sufuuf* to. - vn *tasfiif*; ava/pva *misaffif*.
اتسفّف *ʔitsaffif* or *ʔissaffif* /vi/ passive of *saffif*. - iva *mitsaffif*.

س ف ق
سفق *safaq (a)* /vt/ to slam shut. *balaaʃ tisfaq il-baab kida* don't slam the door like that! ‖ *xad fuluus-i w-qaal ʔinna safaqnaa-kum* ≈ he swiped my money and that was the last I saw of it. - vn *safq*; ava *saafiq*; pva *masfuuq*.
اتسفق *ʔitsafaq* or *ʔissafaq* /vi/ to be slammed shut. - iva *mitsifiq*.
انسفق *ʔinsafaq* = *ʔitsafaq*. - iva *minsifiq*.
سفّق *saffaq* /vi/ to blow strongly (of wind). - vn *tasfiiq*; ava *misaffaq*.

س ف ك

سفك *safak (i, u)* /vt/ to shed, spill (blood). - also *safaḫ*. - vn *safk*; ava *saafik*; pva *masfuuk*.

سفّاك *saffaak* **1** /adj */ bloodthirsty. *ʔaatil saffaak* a bloodthirsty killer. **2** /n */ killer, murderer. - also *saffaaḫ*.

اتسفك *ʔitsafak* or *ʔissafak* /vi/ passive of *safak*. *yaama tsafakit dima b-sabab it-taar* how much blood has been shed in vendettas! - iva *mitsifik*.

انسفك *ʔinsafak* = *ʔitsafak*. - iva *minsifik*.

س ف ل

سفل *sifl* /n pl *ʔasfaal*/ **1** bottom edge. *sifl il-baab* the bottom edge of the door. **2** curb(stone). **3** skirting-board.

سفلي *sufli* /adj */ lower, subjacent. *ʔid-door is-sufli* the lower floor. *ʔil-ɛaalam is-sufli [magic]* the nether world. world of demons and evil spirits.

أسفل *ʔasfal↑* /el/ lower/lowest. *li-ʔasfal* downward. *nazziluu fi-ʔasfal saafiliin* he was demoted to the lowest rank.

سفالة *safaala* /n/ baseness, loathsomeness, meanness.

سافل *saafil* **1** /adj * and pl *safala*/ loathsome, base, vile. **2** /n pl *safala, sufala, ʔasaafil*/ scoundrel, cad, heel.

سفّل *saffil* /vi/ to behave in a despicable, caddish manner. *ʔinta ḫa-tsaffil maɛaaya* are you going to play dirty with me? - ava *misaffil*.

اتسافل *ʔitsaafil* or *ʔissaafil* /vi/ to speak rudely. *bi-yitsaafil ɛala zumalaat-u* he abuses his colleagues. - ava *mitsaafil*.

س ف ل ت see also ء س ف ل ت

سفلت *saflit* /vt/ to cover with asphalt. - vn *saflata*; ava/pva *misaflit*.

اتسفلت *ʔitsaflit* or *ʔissaflit* /vi/ to be covered with asphalt. - vn *tisafliit*; iva *mitsaflit*.

س ف ل ق

سفلق *saflaq* /vt/ to do (s.th.) carelessly or in a slipshod manner. - vn *saflaqa*; ava/pva *misaflaq*.

سفلقة *saflaqa* /n/ **1** sloppiness, carelessness. **2** sponging, living off others. *bi-yaakul saflaqa* he sponges his meals off others.

سفلاق *siflaaq* /n pl *siflaaqa*/ sponger, freeloader.

اتسفلق *ʔitsaflaq* or *ʔissaflaq* /vi/ passive of *saflaq*. - iva *mitsaflaq*.

س ف ن

سفينة *safiina* /n pl *sufun, safaayin*/ ship, boat. *safiinit nuuḫ* Noah's ark. *safiinit ʔinzaal* landing craft. *safiinit faḍaaʔ* space-ship.

س ف ن ج

سفنج *safing, sifing* /coll n/ sponge(s). *ʔalta sfing* sponge-rubber cushion.

سفنجة *safinga, sifinga* **1** /unit n, pl *-aat*/ a sponge. **2** /n/ liquor sponged from a counter and resold, 'liquor squeezings'.

سفنجاية *sifingaaya, safingaaya* = *safinga*.

س ف ن د ر

سفندر *safandar* /coll n/ *[bot]* horse-tongue tree (Ruscus hippo-glossum L.). - also *lisaan il-faras*.

س ف ن د ي

سفندي *safandi* <prop n *Yusuf Efendi*> /coll n/ tangerine(s). - also *yusafandi, yuusif ʔafandi, yùsfi, ʔistafandi, yustafandi*.

سفنديّاية *safandiyyaaya* /unit n, pl *safandiyyaat*/ a tangerine.

س ف ه

سفه *safah* /n/ **1** insolence. **2** *[Isl law]* legal incompetence.

أسفه *ʔasfah* /el/ more/most insolent.

سفاهة *safaaha* /n pl *-aat*/ insolence.

سفيه *safiih* /adj pl *sufaha*/ **1** insolent. **2** *[Isl law]* incompetent.

سفّه *saffah, saffih* /vt/ to denigrate, deprecate. *leeh dayman bi-tsaffih kalam-hà* why do you keep putting her down? - vn *tasfiih*; ava/pva *misaffah*.

اتسفّه *ʔitsaffah* or *ʔissaffah* /vi/ passive of *saffah*. - iva *mitsaffah*.

س ف و ن

سيفون *sifoon* <Fr *siphon*> /n pl *-aat*/ **1** cistern, lavatory tank. *fadd is-sifoon* he flushed the lavatory. **2** trap of a pipe or a drain. **3** soda siphon.

س ف ي

سفى *safa¹ (i)* **1** /vt/ to raise, swirl up (dust, sand). **2** /vi/ to rise (of dust or sand). - vn *safy*; ava *saafi*; pva *masfi*.

سفي *safy* /n/ fine dust. *safy rmaal* sand drift.

سفا *safa²* /coll n/ **1** thorns. **2** thin thorn-like fishbones.

سفاية *safaaya* /unit n, pl *-aat*/ **1** a thorn. **2** a thorn-like fishbone.

س ف ي ت

سوفييتي *suvyitti, suvyiiti* /adj pl *suvyitt*/ Soviet. *ʔil-ʔittiḫaad is-suvyitti* the Soviet Union.

س ق see و س ق : *siqa*

س ق ا ل

سقالة *siqaala*[1] <Gr *skala*> /n pl *-aat, saqaayil/ [naut]* **1** gangplank. **2** port-side. *siqaala labanda* hard a-port!

سقالة *siqaala*[2] or *saqqaala* <Gr *skala*> /n pl *siqalaat, saqqalaat, saqaayil/* **1** scaffold, scaffolding. **2** pier, jetty.

س ق ب see ت ق ب : *suqb*[1]

س ق ر[1]

سقر *saqar, saqar* /fem n/ *[Isl]* hell.

س ق ر[2] see س ق ق ا ر : *saqqaara*

س ق س ق

سقسق *saqsaq* **1** /vt/ to moisten (by sprinkling). *saqsaq il-ɛeef bi-fwayyit mayya yibqa ṭari* sprinkle some water on the bread and it will become soft. **2** /vi/ to chirp. - also *zaqzaq*. - vn *saqsaqa*; ava/pva *misaqsaq*.

اتسقسق *ʔitsaqsaq* or *ʔissaqsaq* /vi/ to be moistened. - iva *mitsaqsaq*.

س ق ط

سقط *saqaṭ*[1], *suquṭ, siqiṭ (a, u)* /vi/ **1** to fall, drop. *ʔil-mandiil saqaṭ min ʔiid-i* the handkerchief fell from my hand. ‖ *qalb-i siqiṭ* I felt faint. - *suquṭ min nazar-i* (or *min ɛeen-i*) I've lost all respect for him. **2a** to have a miscarriage, abort. *siqṭit baɛd il-ḥadsa* she miscarried after the accident. **2b** *[path]* to prolapse: *suquuṭ beet il-wild* prolapse of the uterus. **3** to fail (in an examination). *siqiṭ*[i] *fil-ɛarabi* I failed in Arabic. **4a** to drop out, disappear. *ʔism-u saqaṭ mil-kaff* his name dropped from the list. **4b** to lapse, cease (of a right). **5** *[mech]* to be seated (in or on s.th.). *ʔik-kabbaas bi-yisqaṭ fil-masuura* the piston is seated in the pipe. **6** *[naut]* to drift (with the wind, tide etc.). - vn *suquuṭ, saqaṭaan*; ava *saaqiṭ*.

¶ *yasquṭ* ... down with ...!

سقط *saqaṭ*[2] *(i)* /vt/ **1** to drop. *saaɛit ma l-mayya tivli ʔisqiṭi l-xuḍaar* as soon as the water boils drop in the vegetables. **2** to plot, trace (on a map or chart). - vn *saqṭ, saqaṭaan*; ava *saaqiṭ*; pva *masquuṭ*.

سقوط *suquuṭ* /n/ *[naut]* sag.

ساقط *saaqiṭ* /n */ unprincipled person.

سقط *saqṭ* /n/ **1** abortion, miscarriage. **2** miscarried foetus.

سقطة *saqṭa*[1] /inst n, pl *-aat*/ a drop, a fall.

ساقطة *saqṭa*[2] /fem ava/ ‖ *kull*[i] *saqṭa w-laha laqṭa [prov]* ≈ every Jack has his Jill. - *qaaɛid ɛas-saqṭa wil-laqṭa [prov]* ≈ on the alert for every opportunity (especially the opportunity to act against one's enemies).

سقطان *saqṭaan: qalb-(i) saqṭaan (min ig-guuɛ)* (I am) fainting from hunger.

سقط *saqaṭ*[3] /n/ **1** offal. ‖ *ɛidim il-gild*[i] *wis-saqaṭ* he lost everything. **2** /coll/ windfall(s) (especially of oranges and lemons).

سقاط *suqaaṭ* /n/ **1** offal. **2** that which falls from something. *suqaaṭ il-ɤurbaal* siftings, what falls from the sieve.

سقاطة *suqaaṭa = suqaaṭ*.

سقّاط *saqqaaṭ* /n * and pl *saqqaaṭa/* seller of offal.

سقّاطة *suqqaaṭa* or *saqqaaṭa* /n pl *-aat*/ **1** door latch. **2** (short for *suqqaaṭit il-ʔamaan*) safety-catch (of a gun). **3** *[mech]* pawl, ratchet (e.g., of a water-wheel). **4** *[naut]* **4a** centre-board. **4b** anchor, any weight serving as an anchor (in Nile boats).

اتسقط *ʔitsaqaṭ* or *ʔissaqaṭ* /vi/ **1** passive of *saqaṭ*[2]. **2** to drop down, jump down. - iva *mitsiqiṭ*.

انسقط *ʔinsaqaṭ = ʔitsaqaṭ*. - iva *minsiqiṭ*.

سقّط *saqqaṭ* /vt/ **1** to cause to fall, let fall. *saqqaṭt il-mandiil* I dropped the handkerchief. *saqqaṭit il-filuus fil-ḥaṣṣaala* she dropped the money in the savings box. **2** to lower. *ḥuṭṭ il-filuus fis-sabat wi-saqqaṭ-huu-li* put the money in the basket and lower it to me. **3** to dip, drop. *nisaqqaṭ-ha fis-sukkar* we dip it in the sugar. **4** to (cause to) fail in an examination). *ʔil-mudarris da huwwa lli saqqaṭ-ni* it was that teacher who failed me. **5** to seat (one thing in or on another). *bi-nsaqqaṭ-ha fil-magaari* we seat them in the grooves. **6** to plot (on a map or chart). **7** to abort, perform an abortion for. *saqqaṭit nafs-a-ha* (1) she aborted herself. (2) she got an abortion. — /vi/ **8** to have a miscarriage. - vn *tasqiiṭ*; ava/pva *misaqqaṭ*.

اتسقّط *ʔitsaqqaṭ* or *ʔissaqqaṭ* /vi/ passive of *saqqaṭ*. ‖ *qaaɛid yitsaqqaṭ-li kull*[i] *valṭa* he keeps picking on me. - iva *mitsaqqaṭ*.

س ق ع[1]

سقع *suquɛ, siqiɛ (a)* /vi/ **1** to become chilled (of drinks etc.). **2** to feel chilly or shivery. - vn *suquɛiyya*; ava *saaqiɛ*.

سقوعيّة *suquɛiyya* /n/ coldness. *ʔana ḥasseet bi-suquɛiyyit il-filuus* I felt the cold touch of the money.

ساقع *saaqiɛ* /adj/ cold, chilly. *tifrab ḥaaga saqɛa* would you care for a cold drink? ‖ *damm-u saaqiɛ* he is insensitive and unpleasant, he is a creep.

سقعة *saqɛa* /n/ chill, coldness. *ɤasalt-u-hum bi-mayya fatra yaɛni ṭayra saqɛit-ha* I washed them in tepid

water, that's to say, (water) with the chill taken off.
سقعان *saqʕaan* /adj */ (feeling) chilly, shivery.
أسقع *ʔasqaʕ* /el/ more/most cold, chilly etc.
سقّع *saqqaʕ* /vt/ to cool, chill. *saqqaʕ lina l-biira* chill the beer for us. - vn *tasqiiʕ*; ava *misaqqaʕ*.
اتسقّع *ʔitsaqqaʕ* or *ʔissaqqaʕ* /vi/ to be cooled. - iva *mitsaqqaʕ*.
اتسقع *ʔistasqaʕ* /vt/ **1** to consider cold or chilly. *ʔana mistasqaʕ ig-gaww - xallii-na naaxud jakittaat* I find the air quite chilly; let's take jackets along. ‖ *bi-nistasqaʕ damm-u* we find him a boor. **2** to select for coldness. *ʔistasqaʕ lina qzazteen* pick us a couple of cold bottles. - ava/pva *mistasqaʕ*.

[2] س ق ع
سقع *suqʕ* /adj invar/ choice, first-rate, top-notch. *zubuun suqʕ* a prize customer. *ʔiddaa-lu kilmiteen suqʕ* ≈ he gave him a good talking to. *ʔiggawwizit gawwaaza suqʕ* she married extremely well. *ʔarḍ[i] suqʕ* a choice piece of land.

[3] س ق ع see م س ق ق ع : *misaqqaʕa*

[1] س ق ف
سقف *saqaf (u)* /vt/ to roof, put a roof over. - vn *saqafaan*; ava *saaqif*; pva *masquuf*.
سقف *saqf* /n pl *suquuf, suqúfa, ʔasquf*/ ceiling.
سقفيّة *saqfiyya* /n pl *-aat*/ = *saqf*.
سقيفة *saqiifa, siqiifa* /n pl *saqaayif*/ arbour.
اتسقف *ʔitsaqaf* or *ʔissaqaf* /vi/ to be roofed. - iva *mitsiqif*.
انسقف *ʔinsaqaf* = *ʔitsaqaf*. - iva *minsiqif*.
سقّف *saqqaf[1]* /vt/ to roof, provide with a roof. - vn *tasqiif*; ava/pva *misaqqaf*.
اتسقّف *ʔitsaqqaf[1]* or *ʔissaqqaf[1]* /vi/ to be roofed. - iva *mitsaqqaf*.

[2] س ق ف
سقفة *saqfa* /n pl *-aat*/ a clap.
سقّف *saqqaf[2]* /vi/ **1** to clap, applaud. ‖ *ʔiid waḥda ma-tsaqqaf-ʃ [prov]* (a single hand can't clap) ≈ it takes two to tango. **2** *[mech]* to pink, ping, rattle (of a car engine). *fi tasqiif fil-ʕarabiyya* there's a knocking in the car. - vn *tasqiif*; ava *misaqqaf*.
سقّفت *saqqafit* /n/ style of serving in the game of *xara* (q.v.).
تسقيفة *tasqiifa* /inst n, pl *-aat*/ **1** a clap. **2** a round of applause.
اتسقّف *ʔitsaqqaf[2]* or *ʔissaqqaf[2]* /vi/ (impersonal) passive of *saqqaf[2]*. *ʔitsaqqaf-lu* he was applauded. - iva *mitsaqqaf*.

[3] س ق ف
ثقافة *saqaafa↑* /n/ culture. *wizaarit is-saqaafa* Ministry of Culture. ‖ *ʔis-saqaafa [obsol]* pre-high school leaving certificate. - *ʔis-saqaafa l-gamahiriyya* youth culture centres.
ثقافي *saqaafi↑* /adj/ cultural.
ثقّف *saqqaf* /vt/ to impart culture to, make cultured. *ʔil-ʔaflaam il-kuwayyisa bi-tsaqqaf in-naas* good films educate people. - vn *tasqiif*; pva *musaqqaf*.
تثقيفي *tasqiifi* /adj/ designed to impart culture. *ʔaflaam tasqifiyya* educational films.
مثقّف *musaqqaf↑* **1** /adj */ cultured, sophisticated. **2** /n/ intellectual. *ʔazmit il-musaqqafiin* the estrangement of the intellectuals.
اتسقّف *ʔitsaqqaf* or *ʔissaqqaf* /vi/ passive of *saqqaf*. - iva *mitsaqqaf*.

[4] س ق ف see ء س ق ف : *ʔusquf*

س ق ق ا ر
سقّارة *saqqaara* /prop n/ (the village and pyramid site of) Sakkara.

[1] س ق ل see ت ق ل : *ʔasqaal*

[2] س ق ل see س ق ا ل : *siqaala[1], siqaala[2], saqqaala*

س ق م
سقم *suqm↑* /n pl *ʔasqaam*/ malady, ill. *ʔasqaam igtimaʕiyya* social evils.

س ق ى
سقى *saqa (i)* /vt/ **1** to give to drink. *ʔisqii-ni kubbaayit mayya* give me a glass of water to drink. *saqeet il-ʕigl* I watered the calf. ‖ *ʔasqii l-murr* I'll give him a hard time. - *saqeet-u ṣanʕit-i* I taught him (everything I know in) my trade. **2** to water (plants). *nisqi f-fital baʕḍ[a] ʕafart iyyaam* we water the seedlings after ten days. **3** to irrigate. *fi-baʕḍ in-nawaaḥi laazim yisqu l-ʔarḍ[a] ʕala madaar is-sana* in some areas they must irrigate the land all year round. ‖ *nisqi l-kunaafa s-sukkar maʕquud* we pour the syrup over the *kunaafa*. **4** to silver (mirrors). **5** *[metal]* to plate (metal) by electrolysis. **6** to temper (metal). - vn *saqy, siqaaya, siqiyya*; ava *saaqi*; pva *masqi*.
سقاية *siqaaya* /n/ silvering mixture for mirrors.
ساقية *saqya* /n pl *sawaaqi*/ water-wheel. (see Pl.E, 1).
سقّا، سقاء *saqqa[1]* /n pl *saqqayiin/ [obsol]* water-seller, water-carrier. *bi-ybiiʕ mayya f-ḥaarit is-saqqayiin [prov]* (he sells water in the water-carriers' alley) ≈ he's

carrying coals to Newcastle. *ʕabuu-k is-saqqa maat* (your father, the water-carrier, has died) ≈ polly wants a cracker (phrase taught to parrots).

مسقى *misqa, masqa* /n pl *masaaqi*/ **1** drinking trough or similar device (for watering animals). **2** irrigation ditch or irrigation canal (see Pl.E, 17).

مسقاوي *misqaawi* /adj invar/ requiring regular heavy watering. *fuul misqaawi* type of broad bean which requires heavy irrigation. ‖ *ʕarḍ misqaawi* land bearing a regularly irrigated crop.

اتسقى *ʔitsaqa* or *ʔissaqa* /vi/ passive of *saqa*. -iva *mitsiqi*.

انسقى *ʔinsaqa* = *ʔitsaqa*. -iva *minsiqi*.

سقّى *saqqa*[2] /vt/ to pour (broth or some other liquid) over bread to make *tasqiyya*. ‖ *ʔiḥna ḥa-nsaqqi f-lon-ha - il-muhimm il-mutoor* (are we going to make *tasqiyya* in its colour) what's the colour got to do with it? the important thing is the engine! -vn *tasqiyya*; ava *misaqqi*.

تسقيّة *tasqiyya* /n pl *tasaaqi*/ dish consisting of hot broth or the like poured over crumbled bread. *tasqiyya b-laban* bread soaked in milk.

اتسقّى *ʔitsaqqa* or *ʔissaqqa* /vi/ to be prepared (of *tasqiyya*). -iva *mitsaqqi*.

استسقاء *ʔistisqaaʔ*, *ʔistisqa* or *(maraḍ) il-ʔistisqa* /n/ *[path]* ascites.

س ك ب ى س see – س و ك ب : *sukubees*

[1] س ك ت

سكت *sikit, sakat (u)* /vi/ to be or become silent, stop speaking, maintain silence. *ʔuskuti laḥsan yismaʕ-ik* be quiet or he'll hear you! *ʔayyaam il-imtiḥanaat tilaaqi l-balad sakta* during exam times you'll find the town quiet. ‖ *min sukaat* (1) quietly, silently. (2) without further ado. -vn *sukuut, sukaat*; ava *saakit*.

¶ *sikit ʕala* to do nothing about, leave be, as in *ma-siktuu-ʃ ʕalayya* they would not leave me be, *ma-skitna kiir ʕala z-zull* we've suffered humiliation long enough in silence. *-sikit li-* to overlook, let pass, as in *ʔabuu-ya ma-kan-ʃ[i] yuskut-li lamma ylaqii-ni b-atxaaniq* my father wouldn't overlook it when he found me fighting, *ʔana miʃ ḥ-askut-luhum ʔabadan* I will not let them get away with it, *sikitnaa-lu daxal bi-ḥmaar-u [prov]* (we let it pass (when he brought in the bridle), so he came in with the whole donkey) ≈ we gave him an inch and he took a mile.

سكوت *sukuut, sikuut* /n/ silence.

سكتة *sakta* /n pl *-aat*/ **1** *[mus]* pause, rest. *saktit balanʃ* minim rest, half rest. **2** (also *sakta qalbiyya*) heart failure.

سكّيتي *sukkeeti* /adv/ silently, quietly.

اتسكت *ʔitsakat* or *ʔissakat* /vi/ (impersonal) passive of *sikit*. *ɣalaṭaat-u ssakat ʕaleeha* a blind eye was turned to his mistakes. -iva *mitsikit*.

انسكت *ʔinsakat* = *ʔitsakat*. -iva *minsikit*.

سكّت *sakkit* /vt/ to silence, quiet. *ʔawwil ma l-minabbih ḍarab madd[i] ʔiid-u w-sakkit-u* as soon as the alarm rang he put his hand out and shut it off. -vn *taskiit*; ava/pva *misakkit*.

اتسكّت *ʔitsakkit* or *ʔissakkit* /vi/ be silenced, be quieted. -iva *mitsakkit*.

[2] س ك ت

سكّوتي *sakkuuti* /n/ a variety of dried dates.

[1] س ك ر

سكر *sikir (a)* /vi/ to become intoxicated, get drunk. *bi-yiskar kull[i] yoom xamiis* he gets drunk every Thursday. *ʔana skirt[i] ʃiina* I got dead drunk. -vn *sukr*.

سكر *sakar (i)* /vt/ to make drunk, intoxicate. ‖ *sakar-ni gamaal ɣunaa-ha* her sweet singing enchanted me. -vn *sukr*; ava *saakir*.

سكرة *sakra* /n/ drunkenness. ‖ *raaḥit is-sakra w-gat il-fikra [prov]* ≈ the days of revelry have given way to sober reality.

سكران *sakraan* /adj * and pl *sakaara*/ intoxicated, drunk.

سكرى *sukari* /n pl *-yya*/ drunkard.

سكران، سيكران *sakaraan* /n/ *[bot]* Egyptian henbane.

سكّير *sikkiir, sakkiir* /n pl *sikkiira*/ drunkard, alcoholic.

أسكر *ʔaskar*↑ /vt/ to make drunk, intoxicate. -vn *ʔiskaar*; ava *muskir*.

مسكرات *muskiraat*↑ /pl n/ alcoholic beverages. *gamʕiyyit manʕ il-muskiraat* The Society for the Prohibition of Alcoholic Beverages.

[2] س ك ر

سكّر *sukkar* /n/ **1** sugar. ‖ *sukkar maʕquud* thick syrup of sugar, water and lemon juice. *-sukkar nabaat* crystallized sugar, rock candy. **2** *(maraḍ) is-sukkar* diabetes.

سكّرة *sukkara* /n/ **1** piece of sugar. **2** poppet, sweetie. *ʔir-raagil da sukkara* he's a charming man.

سكّري *sukkari* **1** /adj */ sugar(y). *maḥaliil sukkariyya* sugar solutions. ‖ *ʔil-bool is-sukkari [path]* diabetes. **2** /n/ (also *burtuqaan sukkari*) sweet, bland type of orange.

سكّريّة *sukkariyya* /n pl *-aat*/ sugar bowl.

سكّريّات *sukkariyyaat* /pl n/ sugars, saccharides.

سكّر *sakkar* **1** /vt/ to sugar, candy. **2** /vi/ **2a** to become

sweet. *ʕinab misakkar* sweet grapes. **2b** to crystallize, turn into sugar crystals. *ʃil-ʕasal il-ʃiswid lamma yitxazzin mudda ṭwiila yisakkar* molasses crystallizes when it is stored for a long time. -vn *taskiir*; ava/pva *misakkar*.
مسكّرات *misakkaraat* /pl n/ sweets, candy.

³ س ك ر see ¹ ز ك ر : *taskara*

¹ س ك ر ت
سكرتاه *sukurta* <It *sicurtà*> /n/ *[naut]* safety. *ḥabl¹ sukurta* lifeline. ‖*ʃirka sukurta* maritime insurance company. -*(raagil) sukurta* ship insurance assessor.

² س ك ر ت see ء س ك ر ت : *sikirta, sikarta, sikirtu, sikartu*

س ك ر ت –
سكرتير *sikirteer, sikirtiir, sikriteer* <Fr *secrétaire*> /n pl *sikirteriyyiin*/ (male) secretary. *ʃis-sikirteer il-ʕaamm* the secretary general. *sikirteer ʕaamm if-ʃirka* general manager of the company (responsible for internal administration).
سكرتيرة *sikirteera, sikiritiira* /n pl *-aat*/ (woman) secretary.
سكرتارية *sikirtarya* <Fr *secrétariat*> /n/ **1** secretarial staff. **2** secretariat.

س ك ر و ت
سكروتة *sakaroota* /n/ *[obsol]* trade name of a fine cotton-and-silk fabric used to make shirts and galabiyas.

س ك ر ى ن
سكرين *sakariin* /n/ saccharin.

(س ك س)
سكس *saks¹* <Engl> /n pl *-aat*/ saxophone.
ساكس *saks²* /n/ *[bot]* saxifrage.

² س ك س see س ك و س : *sakuus*

¹ س ك س ك
سكسك *saksik* /vi/ **1** to chirp (of newly hatched chicks). **2** to click, chatter (of a car engine, owing to excessive valve clearance). - also *saqsaq*. - vn *saksaka, tisaksiik*.

² س ك س ك
سكسوكة *saksuuka* /n pl *-aat, sakasiik*/ goatee.

س ك س ن
سكسونيا *saksunya* <T *Saksunya*> /n/ **1** *[obsol]* good quality chinaware. ‖*ʕaql-u saksunya* he's cuckoo. **2** cry of one who sells (and exchanges for anything old or used) various hardware etc.

س ك ش ن
سكشن *sikʃan* <Engl> /n pl *sakaaʃin*/ *[acad]* discussion section, group of students of a large class who meet with a teaching assistant to go through the material already delivered in lectures.

¹ س ك ع
سكع *sakaʕ (a)* /vt/ to strike, hit. *sakaʕt-u ʕalam* I dealt him a smack. *sakaʕt-u* I gave him a kick. ‖*sakaʕ il-ʃakla* he wolfed down the meal. -*sakaʕit-u rimʃ* she gave him a flirtatious look. - vn *sakʕ*; ava *saakiʕ*; pva *maskuuʕ*.
مسكوع *maskuuʕ* /adj */ screwed-up, messed-up. ‖*ya mara ya maskuuʕa* you whore!
اتسكع *ʃitsakaʕ* or *ʃissakaʕ* /vi/ passive of *sakaʕ*. - iva *mitsikiʕ*.
انسكع *ʃinsakaʕ* = *ʃitsakaʕ*. - iva *minsikiʕ*.
اتسكّع *ʃitsakkaʕ* or *ʃissakkaʕ* /vi/ to loaf, loiter. *maaʃi yitsakkaʕ fiʃ-ʃawaariʕ* he's loafing around in the streets. - vn *tasakkuʕ*; ava *mitsakkaʕ*.

س ك ف
إسكافى *ʃiskaafi* /n pl *-yya*/ *[obsol]* cobbler, shoemaker.

¹ س ك ك
سكّ *sakk¹ (u)* /vt/ **1** to shut, close, lock. *sukk il-baab waṛaak* shut the door behind you. *ʃasukk-u bil-muftaaḥ yaʕni* should I lock it, you mean? ‖*muxx-u maskuuk* he's dense. **2a** to shut off, cut off (a flow). *ʃil-ʕawwaama bi-tsukk il-mayya ʕan is-sifoon* the float shuts off the water from the tank. **2b** to switch off, turn off (radio, tap, light, television, engine etc.). *sukk in-nuur* turn off the light. **3** to snatch, grab. *sakk if-fanṭa w-miʃi* he grabbed the bag and left. **4** to hit, punch. *sakkeet-u ʕalʔa* I beat him up. **5** (also *ṣakk*) to mint (money). – /vi/ **6** to close down. *ʃil-maṭʕam da sakk¹ min zamaan* that restaurant closed down ages ago. **7** *[mech]* to click, chatter (of a car engine). - vn *sakk, sakakaan*; ava *saakik*; pva *maskuuk*.
سكّة *sikka* /n pl *sikak, sikkaat*/ **1** road. *ṣaayiq wi-ʕeen-u ʕas-sikka* driving and keeping his eyes on the road. *waaxid is-sikka ʕyaasa* he travels back and forth along the road. ‖ *ʃis-sikka l-ḥadiid* the railway, the railroad. -*ʕuddaamak sikka* there's a journey in your fu-

ture (fortune telling). -*sikkit is-salaama* safe journey! **2a** route. *ʕeeh ʕashal sikka lil-balad* what's the easiest way to town? *ʔul-li sikkit-u feen* tell me how to get to him. ‖*fis-sikka* (1) on the way, en route, as in *ʔabilt-u fis-sikka* I met him on the way, *ʕandaha talat ʕiyaal wir-raabiʕ fis-sikka* she has three kids and the fourth is on the way, *bet-hum fi-sikkit-i w-ʕana raayiḥ if-furl* I pass (near) their house on my way to work. (2) in the way, as in *ʕinta f-sikkit-i* you're in my way. -*sikkit ʕabu zeed kull-a-ha masaalik [prov]* ≈ where there's a will there's a way. **2b** course of action. *ma-fii-f ʔuddaamak ʕilla sikka waḥda* there is only one course open to you. **3** (telephone) line. ‖*ʔafal is-sikka* to put down the receiver. -*ma-tiʔfil-f is-sikka* keep the line open.

اتسكّ *ʕitsakk*[1] or *ʕissakk*[1] (also *ʕitṣakk* or *ʕiṣṣakk*) /vi/ passive of *sakk*. -iva *mitsakk*.

انسكّ *ʕinsakk*[1] (also *ʕinṣakk*) = *ʕitsakk*[1]. -iva *minsakk*.

س ك ك [2]

سكّ *sakk*[2] *(u)* /vt/ to adulterate, vitiate. *ʕir-raagil da maʕruuf ʕannu ʕinnu bi-ysukk it-taʕmiira lli bi-ybiʕ-ha* that man is known for adulterating the hashish he sells. -vn *sakk, sakakaan*; ava *saakik*; pva *maskuuk*.

سكّة *sakka* **1** /n/ *[slang]* wash-out, loser. *ʕir-raagil da xamma w-sakka* that man is a born loser. **2** /adj invar/ **2a** junky, worthless. *minabbih sakka* a cheap alarm-clock. **2b** adulterated, vitiated. *da wiski sakka* this is watered down whisky.

اتسكّ *ʕitsakk*[2] or *ʕissakk*[2] /vi/ to be adulterated, be vitiated. -iva *mitsakk*.

انسكّ *ʕinsakk*[2] = *ʕitsakk*[2]. -iva *minsakk*.

س ك ك [3]

سكّ *sikk* /interj/ sound made to drive a goat away.

س ك ل ن س

سكلنس *sakalans* <prob It *mescolanza*> /n/ mixture, hodgepodge.

س ك ن [1]

سكن *sikin*[1] *(u)* /vi/ to become occupied, become tenanted. *ʕil-ʕimaara di kull-a-ha sakna* that block is fully occupied. -vn *sakan*; ava *saakin*.

سكن *sikin*[2] or *sakan*[1] *(u)* /vt and vi/ to inhabit, dwell. *ʕif-faʔʔa lli-ḥna saknin-ha* (or *sakniin fiiha*) the flat in which we're living. ‖*beet maskuun* a haunted house. -vn *sakan, sukna*; ava *saakin*; pva *maskuun*.

سكن *sakan*[2] /n/ lodging, accommodation.

سكنى *sakani* /adj/ residential. *manaaṭiʔ sakaniyya* residential areas.

ساكن *saakin* /n pl *sukkaan*/ **1** tenant. *hiyya b-tinʔil il-ʕaff*[i] *lis-saakin ig-gidiid* she's moving the furniture for the new tenant. **2** inhabitant. *huwwa min sukkaan il-manṭiʔa* he is an inhabitant of the area. *sukkaan il-ʕaalam* the world population.

سكّاني *sukkaani* /adj/ population, pertaining to the population. *ʕik-kasaafa s-sukkaniyya* the population density. *ʕil-infigaar is-sukkaani* the population explosion.

مسكوني *maskuuni* /adj/ *[Chr]* ecumenical. *maglis maskuuni* ecumenical council. *ʕil-ḥaraka l-maskuniyya* the Ecumenical Movement.

مسكن *maskan* /n pl *masaakin*/ house, residence. *masaakin ʃaʕbiyya* (government-subsidized) low-income housing developments.

اتسكن *ʕitsakan* or *ʕissakan* /vi/ passive of *sikin*[2] or *sakan*[1]. -iva *mitsikin*.

انسكن *ʕinsakan* = *ʕitsakan*. -iva *minsikin*.

سكّن *sakkin*[1] /vt/ **1a** to house, provide accommodation for. **1b** to settle (people). **2a** to let, rent out, lease out, sublet. *ʕinta bi-tsakkin il-badroon* you're renting out the basement? **2b** to settle (people, land etc.). *ʕiʕaadit taskiin is-suwees* the resettlement of Suez. -vn *taskiin*; ava/pva *misakkin*.

اتسكّن *ʕitsakkin*[1] or *ʕissakkin*[1] /vi/ passive of *sakkin*[1]. -iva *mitsakkin*.

إسكان *ʕiskaan* /vn/ housing, settlement. *wizaarit il-ʕiskaan (wit-taʕmiir)* Ministry of Housing (and Reconstruction).

س ك ن [2]

سكن *sikin*[3] /vi/ to abate, become dormant. *ʕil-wagaʕ sikin baʕd*[i] *ma xadt id-dawa* the pain abated after I took the medicine. -vn *sukuun*; ava *saakin*.

سكون *sukuun, sikuun* /n/ **1** calm, tranquillity, peace. **2** *[gram]* **2a** vowellessness (of a consonant). **2b** (also *ʕalaamit sukuun*) diacritical mark over a vowelless consonant.

سكينة *sikiina* /prop n/: *rayya wi-skiina* two notorious murderesses in Alexandria in the nineteen-thirties.

سكّن *sakkin*[2] /vt/ **1** to cause to abate or become dormant. *ʕid-dawa sakkin-li l-wagaʕ* the medicine caused my pain to abate. **2** to tranquillize, sedate. *ʕid-dawa sakkin-ni* the medicine sedated me. **3** to calm, calm down. -vn *taskiin*; ava/pva *misakkin*.

مسكّن *musakkin* /n pl *-aat*/ **1** sedative, tranquillizer. **2** pain killer.

اتسكّن *ʃitsakkin*[2] or *ʃissakkin*[2] /vi/ passive of *sakkin*[2]. - iva *mitsakkin*.

[3] س ك ن

سكّين *sikkiin*↑ /fem n/ = *sikkiina*. - common in unelevated speech in the phrase *sarqaa s-sikkiin* ≈ he's lost touch with reality, he's living in a world of false hopes.

سكّينة *sikkiina* /n pl *sakakiin*/ **1** knife, blade (used, loosely, of any cutting instrument). *sikkiina faransaawi* (farrier's) long-bladed sole knife. *sikkiinit il-maqaṣṣ* blade of the scissors. *sikkiinit taranf* (butcher's) slicing-wheel. *sikkiinit qaṭʕiyya* (plumber's) pipe cutter. ‖*ʕas-sikkiina* subject to scrutiny, as in *baṭṭiix ʕas-sikkiina* ≈ water-melon, guaranteed red and juicy (cut open to prove it). **2** any of various devices having a blade-like shape or a blade-like part (e.g., saddle clip to which the stirrup attaches, knife switch, centre-board of a sailing boat). ‖*faṣal* (or *fataḥ*) *is-sikkiina [elec]* to shut off the power. - *mufaṣṣala sikkiina [carp]* a hinge whose flange is countersunk into the door. **3a** plasterer's trowel. **3b** painter's spatula. — /adj invar/ **4** of the best quality. *quṭn*[i] *sikkiina* first grade raw ginned cotton.

[4] س ك ن

ثكنات *sakanaat* /pl n/ barracks.

س ك ن د

سكند *sikund* <perh Engl> /n/ *[naut]* second officer.

س ك ن د و

سكندو *sikundu* <It *secondo*> /adj invar/ **1** second class. *tazkara skundu* second class ticket. **2** second. *ʃiṭ-ṭabaq is-sikundu* the second course (in catering). ‖*mitr*[i] *skundu* assistant *maître d'hôtel*. — /n pl *-haat*/ **3** *[naut]* second officer.

س ك و س

سكوس *sakuus* /n/ *[Chr]* alb worn by an Orthodox bishop.

س ك و ى

سكوية *sikooya* /coll n/ sequoia tree(s).

س ل ا ر

سولار *sulaar* (also *sular*) /n/ diesel fuel.

[1] س ل ب

سلب *salab*[1] /coll n/ thick rope(s), hawser(s).

سلبة *salaba* /unit n, pl *-aat*/ a thick rope, a hawser. *rabaṭ is-salaba fin-naaf* he tied the rope to the yoke.

سلّب *sallib* /vi/ to tie a thick rope or hawser (around s.th.). *sallibt*[a] *ʕal-baramiil* I roped up the barrels with a stout rope. - vn *tasliib*; ava/pva *misallib*.

اتسلّب *ʃitsallib* or *ʃissallib* /vi/ (impersonal) passive of *sallib*. *ʃitsallib ʕala f-feela* the load was roped up. - iva *mitsallib*.

[2] س ل ب

سلب *salab*[2] *(i)* /vt/ **1** to take away by force. *salab minni kull illi kaan maʕaaya* he took everything I carried on me. **2** to carry away, take away. *ʃik-kuḫḫa salabit nafas-i* the cough left me breathless. ‖*gamal-ha yislib il-ʕuquul* her beauty drives men crazy. **3** to snatch, steal. *salab maḫfaẓt-i* he stole my wallet. ‖*salab faraf-ha* he deflowered her. **4** to rob. *salab-ni min ʏeer m-adri* he robbed me and I wasn't even aware of it. **5** to pillage, sack, plunder. *salabu l-balad wi-nahabuu-ha* they sacked and pillaged the country. **6** to taper. *ʃislib-li l-kumm*[i] *min ʕand il-ʃaswira min faḍl-ak* please taper the sleeve at the cuff. - vn *salb*; ava *saalib*; pva *masluub*.

سلبة *salba* /pl *-aat*/ instance noun of *salb*.

سلبى *salbi* /adj */ **1** negative, passive (of a person or attitude). **2** *[elec]* negative.

سلبيّة *salbiyya* /n/ negativism.

سالب *saalib* **1** /adj/ negative. *quṭb*[i] *saalib* negative pole. **2** /n/ *[elec]* cathode.

مسلوب *masluub* /adj */ **1** deprived. *masluub ḫaqq-u* deprived of his rights. *masluub il-ʃiraada* robbed of will. **2** wedge-shaped, tapered. *ʃil-qaduum ʕibaara ʕan fakuuf ʃinnama masluub min in-naḫyiteen* the adze is like a hammer, but tapered at both ends. *kumm*[i] *masluub* tapered sleeve.

اتسلب *ʃitsalab* or *ʃissalab* /vi/ passive of *salab*. - iva *mitsilib*.

انسلب *ʃinsalab* = *ʃitsalab*. - iva *minsilib*.

[3] س ل ب

أسلوب *ʃusluub* /n pl *ʃasaliib*/ method, manner, style. *ʃusluub il-ʕamal fif-ʃirka* the work routine in the company.

[4] س ل ب see س ل ب ب : *saliib*

س ل ب ب

سليب *silibb* (also *saliib*) <Fr *slip*> /n pl *-aat*/ Y-fronts, jockey briefs.

س ل ب س

سلبس *silibs* /n pl *-aat*/ **1** (pair of) rubber-soled shoes. **2** lavatory seat.

س ل ب ط
سلبطة *salbaṭa* /vn/ importunity.
سلباط *silbaaṭ* /n pl *silbaaṭa*/ an importunate pest.
اتسلبط *ʔitsalbaṭ* or *ʔissalbaṭ* /vi/ to importune, beg or plead persistently. *ʕaʕadit titsalbaṭ ʕalee lamma ddaa-ha l-ʕaʃara gneeh* she kept begging him until he gave her the ten pounds. - vn *tisalbiiṭ*; ava *mitsalbaṭ*.

س ل ت
سلت *salat (i)* **1** /vt/ to pull out, slip out. *salatt*^{i} *il-xeeṭ mil-ʔibra* I pulled the thread out of the needle. *min faḍl-ak ʔislit il-ʕirq*^{i} *min il-laḥma* please pull the tendons out of the meat. ‖*salat il-ʔiid min* to drop (s.th. one is doing), as in *salatt*^{i} *ʔiid-i min if-fugl*^{i} *w-qumt*^{i} *ruḥt il-bank* I dropped everything and went off to the bank. **2** /vi/ to slip out. *sigaara salatit mil-ʕilba* a cigarette slipped out of the pack. *law fayl-u kida l-ʔawraaq mumkin tislit* if you carry it like that the papers may slip out. - vn *salataan, salt*; ava *saalit*; pva *masluut*.
سلت *salt* /adj invar/ flat. *sidr-a-ha salt* she is flat-chested. ‖*fustaan salt* an ill-fitting, shapeless dress.
اتسلت *ʔitsalat* or *ʔissalat* /vi/ passive of *salat* 1. - iva *mitsilit*.
انسلت *ʔinsalat* = *ʔitsalat*. - iva *minsilit*.
سلّت *sallit* /vt/ to pull out one by one. - vn *tasliit*; ava/pva *misallit*.
اتسلّت *ʔitsallit* or *ʔissallit* /vi/ **1** passive of *sallit*. **2** to steal away, slip away. - ava/iva *mitsallit*.

س ل ت ك س
سلوتكس *silutiks* /n/ compressed cardboard (used, e.g., for car interiors).

س ل ت ى ب
سلوتيب *silatiib* <Engl> /n/ sellotape, scotch tape.

س ل ت ى ر
سوليتير *suliteer* <Fr> /n pl *-aat*/ solitaire, diamond ring.

س ل ح
سلاح *silaaḥ* /n pl *ʔasliḥa*/ **1a** weapon. *silaaḥ naari* firearm. *ḥaasib is-silaaḥ yiṭwal* watch it, the gun may go off! ‖*suuq is-silaaḥ* name of a section of central Cairo. - *waaḥid min taḥt is-silaaḥ* (1) one who has risen from the ranks. (2) an upstart. **1b** /coll/ arms, armaments. *bi-ygiibu slaḥ-hum min iš-šiin* they get their arms from China. ‖*ʔis-silaaḥ il-ʔabyaḍ* knives, bayonets and any other blades used as weapons. **2** *[mil]* service (of the Armed Forces). ‖*silaaḥ iṭ-ṭayaraan* the Air Force. **3** blade. *silaaḥ miḥraat* ploughshare (see Pl.D, 20). *silaaḥ muus* blade of a straight razor. **4** *ʔis-silaaḥ* (caterer's) coffee-making equipment (pots, cup etc.).
سلاحليك *silaḥliik* /n/ **1** gun rack. **2** small-arms storage room (e.g., in a police station).
سلّح *sallaḥ* /vt/ **1** to arm. *ʔil-quwwaat il-musallaḥa* the armed forces. **2** *[constr]* to reinforce. *xarasaana msallaḥa* reinforced concrete. ‖*waraq zeet misallaḥ* wired oil-seal paper. - vn *tasliiḥ*; ava *misallaḥ*; pva *musallaḥ*.
اتسلّح *ʔitsallaḥ* or *ʔissallaḥ* /vi/ **1** to be armed, arm oneself. *da mitsallaḥ bi-sikkiina* that man is armed with a knife. **2** to be reinforced. - ava/iva *mitsallaḥ*.

س ل ح ف
سلحفة *silḥifa, sulḥifa* /n pl *-aat, salaaḥif*/ tortoise. - also *siḥlifa, suḥlife, ziḥlifa, zilḥifa, zuḥlifa, zulḥifa*.

س ل ح ل – see س ل ح : *silaḥliik*

س ل خ
سلخ *salax (u)* /vt/ **1** to flay, skin. *salaxit il-ʔaraanib* she skinned the rabbits. ‖*ʔabu rigl*^{i} *masluuxa* the bogeyman (a creature described as half man and half donkey and having flayed legs). **2** to skin, abrade. *wiqiʕt*^{i} *w-salaxt*^{i} *rukbit-i* I fell and skinned my knee. **3** to burn (of the sun). *ʔif-fams*^{i} *salaxit-ni xaaliṣ* I got badly sunburned. **4** to punish harshly. - vn *salx, siliix*; ava *saalix*; pva *masluux*.
سلخ *salx* /vn/ skinning. ‖*budrit salx* spot remover.
سلخة *salxa* /n pl *-aat, silax*/ **1** strip. **2** *[print]* galley.
سليخة *siliixa* /inst n/ a skinning. *kazlak siliixa* skinning knife.
سلخانة *salaxaana* /n pl *-aat*/ slaughterhouse.
اتسلخ *ʔitsalax* or *ʔissalax* /vi/ passive of *salax*. - iva *mitsilix*.
انسلخ *ʔinsalax* = *ʔitsalax*. - iva *minsilix*.
سلّخ *sallax* **1** /vt/ to make an incision in. **2** /vi/ **2a** to become chapped or raw (of skin). **2a** to become sunburned (of skin). - vn *tasliix*; ava/pva *misallax*.
اتسلّخ *ʔitsallax* or *ʔissallax* /vi/ **1** to become chapped or raw (of skin). **2** to become sunburned (of skin). **3** to be incised. - ava/iva *mitsallax*.

س ل ر see س ل ا ر : *sular, sulaar*

س ل س [1]
سلس *salas* /n/ *[path]* incontinence. *salas bool [path]* enuresis. ‖*ʕandu salas fil-kalaam* he's a chatterbox, he suffers from logorrhoea.

سلس *salis↑* /adj/ fluent, articulate. *kalaam-u salis* he's a good conversationalist.
سلاسة *salaasa* /n/ **1** docility, tractability. **2** fluency (of style).

س ل س [2] see ت ل ت: *sulus, sulaasi, saluus, saalisan, musallas, tasliis*

س ل س ف –
سلسفيل *salsafiil* /n/: *yilɛan salsafiil-ak [abus]* ≈ curse your whole family tree! - also *sansafiil.*

س ل س ل
سلسل *salsil* /vt/ **1** to arrange in order, assign to a series. *bi-ylimm iṭ-ṭalabaat wi-ysalsil-ha* he collects the applications and assigns serial numbers to them. **2** to serialize. **3** to chain up, put in chains. ‖*qird[i] msalsil* a pest, a nuisance. - vn *salsala*; ava/pva *misalsil, musalsal.*
مسلسل *musalsal* /n pl *-aat*/ series, serial (on radio, television etc.).
مسلسلة *musalsala* /n pl *-aat*/ = *musalsal.*
سلسلة *silsila* /n pl *salaasil*/ **1** chain. *silsilit mafatiiḥ* key chain or key-ring. ‖*ɣurzit silsila* chain-stitch. *-silsilit iḍ-ḍahr* spinal column. **2** range, chain. *silsilit gibaal* mountain range. **3** sequence, chain. *silsilit ʕaḥdaas* a sequence of events. **4** series (of a publication etc.).
سلسيل *salasiil* /n/ spinal column.
اتسلسل *ʕitsalsil* or *ʕissalsil* /vi/ passive of *salsil.* -vn *tasalsul*; ava/iva *mitsalsil.*
تسلسل *tasalsul↑* /n/ sequence.

س ل ط [1]
سلطة *sulṭa[1]* /n pl *-aat*/ power, authority. *ʕis-sulṭa l-ɛaskariyya* military authority. *ʕis-sulṭa t-tafriɛiyya* legislative power. *ʕis-sulṭa t-tanfiziyya* executive power. *ʕis-sulṭa l-qaḍaʕiyya* judicial power. *lu sulṭaat il-mufrif il-ɛaamm* he has the powers of General Overseer.
سلطان *sulṭaan* /n/ **1** effective majestic power. **2** /pl *salaṭiin*/ sultan. *kull[i] ʕinsaan fi-nafs-u sulṭaan [prov]* every man is a sultan in his own eyes. *ʕil-mixoozaq yiftim is-sulṭaan [prov]* (the impaled man will curse the sultan) in extremities a man will do anything. *ʕil-ʕaɛwar been il-ɛumyaan sulṭaan [prov]* among the blind a one-eyed man is king. *bi-fluus-ak bint is-sulṭaan ɛaruus-ak [prov]* if you are rich the sultan's daughter will marry you. ‖ *ʕana sulṭaan zamaan-i* I'm the master of my own time. I can do as I please. See further under س ل ط ن
سلطاني *sulṭaani* /adj invar/ splendid, regal, first-class. *qaɛda sulṭaani* a princely party. *nahaar sulṭaani* a fine day. ‖*ḥibr[i] sulṭaani* ink made by boiling the singed ingredients in water.
سلطانيّة *sulṭaniyya* /n pl *-aat, salaṭiin*/ **1** bowl. **2** *[plumb]* bowl of a pedestal lavatory.
سلّط *sallaṭ* /vt/ **1** to incite, stir up (against s.o.). *ḥadd[i] msallaṭ-kum ɛala baɛḍ* is someone setting you against each other? **2** to point, aim. *sallaṭ ɛaleehum xarṭuum il-mayya ɛaʃaan yifarraq-hum* he directed the water hose at them to disperse them. - vn *tasliiṭ*; ava/pva *misallaṭ.*
اتسلّط *ʕitsallaṭ* or *ʕissallaṭ* /vi/ passive of *sallaṭ.* -iva *mitsallaṭ.*

[2] (س ل ط)
سلطة *salṭa[1]* <It *salto*> /n pl *-aat*/ *[gym]* somersault, flip.
سلطة *sulṭa[2], salṭa[2]* /n/ regulation khaki tunic (during British occupation).
سلطة *salaṭa* <Gk *salata*> **1** /n pl *-aat*/ side-dish, e.g., a dip, cold vegetables or salad, eaten with or before the main meal. *salaṭit ṭiḥiina* side-dish of sesame-seed paste. *salaṭa xaḍra* green salad. **2** /no pl/ mess, muddle. *xalla l-ḥikaaya salaṭa* he made a mess of the whole thing.

س ل ط ح see ص ل ط ح: *salṭaḥ*

س ل ط ن see also [1] س ل ط
سلطن *salṭan* /vi/ **1** to settle back and relax, take one's ease (being in an expansive mood and feeling oneself to be in one's element). *ʃuuf-u qaaɛid mitsalṭan* see how blissfully he's sitting there! **2** to reach a point of inspired virtuosity (usually of a singer). – /vt/ **3** to make comfortable. *ʕitnaḥnaḥ wi-sälṭan nafs-u w-bada yvanni* he cleared his throat, settled himself, and began to sing. ‖*salṭan il-maqaam* to play introductory music (in the same mode as that which will follow) in order to set the mood. - vn *salṭana*; ava/pva *misalṭan.*
سلطنة *salṭana* **1** /vn/ expansive luxurious relaxation. *kaan qaaɛid ʕaaxir salṭana b-yifrab ʃiiʃa* he was totally relaxed smoking his narghile. **2** /n pl *-aat*/ sultanate.
اتسلطن *ʕitsalṭan* or *ʕissalṭan* = *salṭan* 1 and 2. - ava *mitsalṭan.*

س ل ع
سلعة *silɛa↑* /n pl *silaɛ*/ commodity.

س ل ع و see also س ل و ع
سلعوّة *salaɛawwa* /n/ ugly skinny person. *ɛamla zayy is-salaɛawwa* she looks like a skinny witch.

س ل ف [1]
سلفة *sulfaˀ* /n pl *-aat, sulaf/* (usually official) loan of money. *ruḥt il-bank[i] w-ɛamalt[i] sulfa* I went to the bank and took out a loan.
سلف *salaf[1]* /n/ borrowing, loan. *xadt ik-kitaab da salaf* I took the book on loan. *ʕiddii-ni xamsa gneeh salaf* lend me five pounds! ‖ *ʕis-salaf talaf [prov]* ≈ lend and lose; so play fools. *kull-u salaf wi-deen [prov]* ≈ what you sow you reap.
سلفيّة *salafiyya* /n pl *-aat/* official loan, (of money) imprest.
سلّف *sallif, sallaf* /vt/ to lend, loan. *sallifit-ni ʕustaan* she lent me a dress. *bi-ysallif filuus bil-faayiz* he makes loans at usurious rates. ‖ *bank it-tasliif (iz-ziraaɛi)* agricultural loan bank (for seeds, fertilizer etc.). - vn *tasliif*; ava/pva *misallif*.
استلف *ʕistalaf* /vt/ to borrow. *ʕistalaft[i] min miraat-i gneeh* I borrowed a pound from my wife. - vn *ʕistilaaf*; ava *mistilif*.

س ل ف [2]
سلف *silf* /n pl *salaayif/* husband's brother.
سلفة *silfa* /n pl *salaayif/* husband's brother's wife.
سلف *salaf[2]* /coll n/ ancestors. *ʕis-salaf iṣ-ṣaalih* the venerable forefathers. ‖ *xayru xalaf li-xayri salaf* ≈ like good father like good son.
أسلاف *ʔaslaaf* /pl n/ predecessors.
سالف *saalif* /adj/ preceding, prior, previous. ‖ *saalif iz-zikr* aforementioned. - *min ɋadiim iz-zamaan wi-saalif il-ɛaṣr wil-ʕawaan* ≈ once upon a time.
سوالف *sawaalif* /pl n/ sideburns, sideboards.

س ل ف ا
سلفا *salfa, salfa* <Engl> /n/ sulphonamide.

س ل ف ا ت
سلفات *salafaat, sulfaat* <Fr> /n/ sulphate. *sulfaat in-naḥaas* copper sulphate.

س ل ف ا ن
سلوفان *sulufaan, silufaan* <perh Fr> /n/ cellophane.

س ل ق [1] see also س ل و ق
سلق *salaq (u)* /vt/ to boil (solids, especially food). *ʕusluq il-makaroona w-baɛdeen ṣaffii-ha* boil the pasta and then drain it. ‖ *salq[i] beeḍ* a hasty slapdash job. - vn *salq, siliiq*; ava *saaliq*; pva *masluuq*.
سليق *siliiq* /n/ boiled food. *siliiq fi-siliiq* boiled bland food, hospital fare.
اتسلق *ʕitsalaq* or *ʕissalaq* /vi/ to be boiled (of solids, especially food). - iva *mitsiliq*.
انسلق *ʕinsalaq* = *ʕitsalaq*. - iva *minsiliq*.

س ل ق [2]
سلق *salq* /coll n/ chard (used as a vegetable).
سلقة *salqa* /unit n, pl *-aat/* a chard plant.
سلقاية *salqaaya* = *salqa*.

س ل ق [3]
سلوقي *siluuqi* /n/ saluki.
تسلّق *tasalluqˀ* /n/ climb, ascent.

س ل ق ط see ص ل ق ط : *salqaṭ*

س ل ق و ن
سلقون *salaqoon* <perh T *sülüğen*> /n/ red lead. - also *zalaqoon*.

س ل ك
سلك *salak[1] (u)* /vt/ to follow, adhere to. *ḥa-nusluk ṭariiqa muɛayyana* we will follow a particular course. - vn *suluuk*; ava *saalik*; pva *masluuk*.
سلك *silik, salak[2] (a)* /vi/ **1** to pass (through). *ma-b-yislak-ʃ[i] fil-ḥaara di ʕilla l-ɛarabiyya n-nannuusa* only a tiny car can pass through this alley. *ma-b-yislak-ʃ[i] fil-ʕibra ʕumm[i] xurm[i] dayyaq* it won't pass through a narrow-eyed needle. *ʕil-miʃt[i] b-yislak fi-faɛr-i b-suhuula* the comb passes easily through my hair. **2** to manage, cope. *miʃ ḥa-tiqdar tislak fiʃ-ʃuɣlaana di* you won't be able to cope with this job, you aren't up to handling this job. *sib-ni ʕaslak maɛaa* let me handle him. **3** to become disentangled (of hair). - vn *salakaan*; ava *saalik*.
سلوك *suluuk* /n/ behaviour. *bi-niwṣif waaḥid suluuk-u miʃ kuwayyis* we're describing someone whose behaviour is not nice. *ʃihaadit ḥusn[i] seer wi-sluuk* certificate of good conduct, testimonial.
سالك *saalik* **1** /adj */ **1a** clear, unblocked. ‖ *ḍamiir-u saalik* his conscience is clear. - *ʕiid-u salka* he has a skilled hand. **1b** untangled. *faɛr[i] saalik* untangled hair. **2** /n */ *[Isl]* one who follows the Sufi way.
سلك *silk* /pl *ʕaslaak, suluuk/* **1a** wire(s). *ḥibaal silk* wire ropes. *silk it-tilifoon* telephone wire(s). ‖ *silk[i] ḥilal, silk[i] maṭbax* or *silk[i] ʕalamunya* steel wool, scouring steel. **1b** wire mesh. **1c** flex. *silk ir-radyu* radio cord. **1d** bicycle spoke. **2** gold necklace with light-weight pendants. **3** corps (in civil service). *silk[i] qaḍaaʕi* judicial corps. *silk[i] diblumaasi* diplomatic corps.
سلكة *silka* /unit n, pl *-aat, silak/* a piece of wire.
سلكاية *silkaaya* /unit n/ a thin short wire.

أسلك ʔaslak /el/ more/most clear, unblocked or untangled.
سلّاكة sallaaka /n pl -aat/ any instrument used for cleaning or unblocking pipes, tubes etc., such as a pipe-cleaner, rubber plunger for clearing drains, bottle brush.
مسلك maslakˈ /n pl masaalik/ path, course. *masaalik bawliyya* urinary tracts. ‖*sikkit ʔabu zeed kull-a-ha masaalik [prov]* where there's a will there's a way.
سلّك sallik /vt/ 1 to clear, unblock, (pipes etc.). *sallik zoor-ak* clear your throat! *sallikt il-ballaaʕa* I unblocked the drain. 2 to pick (teeth) clean. *sinaan it-tirsᵃ ʕawza tasliik* the teeth of the cog need cleaning. *bi-nsallik is-sinaan bil-xilla* we clean our teeth with a *xilla*. - vn *tasliik*; ava/pva *misallik*.
تسليكة tasliika /inst n, pl -aat/ a clearing, an unblocking. *maʕaana ʈurumba kawitʃⁱ lit-taslikaat* we have a rubber plunger for clearing operations.
اتسلّك ʔitsallik or ʔissallik /vi/ passive of *sallik*. - iva *mitsallik*.

س ل ك س
سلكس siliks <perh Fr *silex*> /n/ silica.

س ل ل ¹
سِلّ sill /coll n/ thorn(s).
سلّة silla /unit n, pl -aat/ a thorn.
سلّاية sillaaya /unit n, pl -aat/ a thorn. ‖*fil-wiʃʃⁱ mraaya w-fil-qafa sillaaya [prov]* a mirror for the face and a thorn for the nape (said of a back-stabber).

س ل ل ²
سلّ sallˈ *(i)* /vt/ 1 to infect with tuberculosis. *bi-yquulu ʔinn iṭ-ṭabafiir bi-ysill il-mudarris* people say that teachers contract tuberculosis from chalk. 2 to waste, emaciate. *ʔil-hammⁱ sall-a-ha* sorrow made her waste away. - vn *sull*; ava *saalil*; pva *masluul*.
سلّ sull /n/ tuberculosis.
مسلول masluul /adj * and pl masaliil/ 1 affected by tuberculosis, tuberculous. 2 emaciated, wasted.
اتسلّ ʔitsall or ʔissall /vi/ 1 to contract tuberculosis. 2 to waste away. - ava *mitsall*.
انسلّ ʔinsall = ʔitsall. - ava/iva *minsall*.

س ل ل ³
سلّ sall² *(i)* 1 /vt/ to draw, unsheath (a sword, a dagger etc.). 2 /vi/ to become erect (of the penis of a quadruped). - vn *sall, salalaan*; ava *saalil*; pva *masluul*.
سلالة sulaala /n pl -aat/ strain, stock. *ʔaḥsan sulaala fil-xeel il-xeel il-ʕarabi* the best breed of horse is the Arabian.
مسلّة misalla /n pl -aat/ 1 heavy needle for sewing sacking, baskets or upholstery, packing-needle. 2 (also *masalla*) obelisk.
اتسلّل ʔitsallil or ʔissallil /vi/ 1 to trespass, infiltrate. 2 *[soccer]* to penetrate as far as the goal before one's team shoots for it, make an offside move (of a forward). - vn *tasallulˈ*; ava *mitsallil*.

س ل ل ⁴
سلّة salla¹ˈ /n pl silal/ basket. *koorit salla* basketball.
سلّال sallaal /n pl -aat, salaali/ basket woven from split cane.

س ل ل و م
السلّوم salluum /prop n/ Salum, a Mediterranean port in north-west Egypt and border post with Libya.

س ل م ¹
سلم silim *(a)* /vi/ to stay safe. *ʔilaah-i tirgaʕ saalim li-ʕyaal-ak [beggars]* ≈ may God return you safely to your children! ‖*min xaaf silim [prov]* (he who fears is safe) ≈ prudence makes for safety. - *tislam* thank you! - *yislam buqq-ak* well said! - *ʔil-ʔamrⁱ ma-yislam-ʃ* ≈ well, nobody's perfect. - *miʃ kullⁱ marra tislam il-garra [prov]* ≈ don't push your luck! - *tislam ʔiid(-ak)* (may (your) hand stay safe) expression of thanks or congratulation to one who has done or made something with his hands. - vn *salaama*; ava *saalim*.
سلامة salaama /n/ 1 safety, wellbeing. *ʔana mihtammⁱ b-salamt-u* I'm interested in his welfare. *ʕayza ḥaaga min il-balad. - la ʕayza salamt-ak* 'Do you want anything from town?' 'No (thank you), just your safe return.' *laazim titʔakkid min salaamit il-ʕarabiyya qablⁱ ma tsaafir biiha* you must make certain the car is in sound condition before you travel with it. ‖*maʕa s-salaama* good-bye (said to one departing). - *salaamit-* invocation of good health, as in *salamt-ak* I hope you get better soon, *hiyya faṭma ʕayyaana - salamit-ha* is Fatma sick? I hope she feels better soon. - *bi-salaamit-* parenthetical formula of concern, as in *ʔizzayy ibn-ik bi-ṣalamt-u* how is your son, may God keep him safe; - also used derisively, as in *ʔil-ḥaraami b-salamt-u xad kull illi ʕandi* the thief - bless his black heart - robbed me blind. - *ḥamd-illa ʕas-salaama* (praise God for (His) safekeeping) expression of felicitation said (1) to a traveller arriving at the end of a journey or to one returning after an absence, (2) to one recovered from

an illness, (3) to a woman after giving birth. **2** integrity, intactness. *salaamit il-waḥda l-waṭaniyya* the integrity of national unity.

سالم *saalim* /ava */ safe, sound, intact. *saalim ɣaanim* (1) safe and sound. (2) scot-free.

أسلم *ʔaslam*[1] /el/ more/most safe, sound or intact. *ʔaslam luhum yaxdu l-ɋaṭr* it's safer for them to take the train.

سلام *salaam* /n/ **1** peace. *ḥamaamit salaam* dove of peace. *ʔis-salaamu ɣaleekum* (peace be upon you) the traditional greeting among Muslims, eliciting the response *wi-ɣaleekum is-salaam*. ‖*ya salaam* exclamation of amazement ≈ my goodness! oh my! as in *ya salaam ɣal-bint il-ḥilwa di* oh what a pretty girl! *ya salaam ɣala ɋillit ʔadab in-naas* my God, how rude people are! - *wis-salaam* and *wis-salaamu ɣaleeku* and that's that! and that's all there is to it. **2a** salute, greeting. *ʔiż-żaabiṭ laazim il-ɣaskari yiḍrab-lu* (or *yaxud-lu*) *salaam* a private has to salute an officer. ‖*kutr is-salaam yiɋill il-maɣrifa [prov]* excessive formality hinders friendship. - *loola salaam-ak sabaɋ kalaam-ak la-kalt*[i] *laḥm-ak ɋabl*[i] *ɣḍaam-ak* ≈ had you not greeted me nicely I would have gobbled you up (traditional response which a monster makes to a greeting in children's stories). **2b** musical salutation, fanfare. *salaam malaki* (or *gumhuuri*) musical rendering of the national anthem.

سلاملك *salamlik* <T *selâmlık*> /n/ **1** ground-floor area reserved for the reception of male guests (especially in a large house). **2** (loosely) ground floor.

سليم *saliim* /adj pl *sulaam*/ sound, healthy, intact. *manṭiɋ saliim* sound logic. *saliim in-niyya* well-intentioned. *ʔil-ɣigl*[i] *saliim* the calf is healthy. *ʔil-ḥamdu li-llaah gat saliima* thank God, it turned out all right. ‖*raagil saliim* an upright man.

سلّم *sallim* /vt/ **1** to hand over. *sallimna ʔawraɋ-na lil-mudarrisa* we handed our papers in to the teacher. *sallim nafs-u* (1) he gave himself up. (2) he presented himself to the authorities (for, e.g., national service). *sallim ʔamr-u li-llaah* ≈ he resigned himself. **2** to keep (s.o.) safe (of God). *ʔallaah yisallim-ak* (may God keep you safe) response to formulae containing the words *sallim* or *salaama* (e.g., *sallim-li ɣalee, maɣa s-salaama*) or to any polite enquiry after one's own or another's health or well-being. ‖*ya salaam sallim* exclamation of amazement ≈ oh wow! well I never! — /vi/ **3** to greet, give a greeting. *sallimii-li ɣala waldit-ik* say hello to your mother for me. *ɣumuuman in-naas bi-ysallimu bil-ʔiid* usually people greet each other by shaking hands. ‖*sallim* shake hands! - vn *tasliim*; ava *misallim*.

تسليم *tasliim* /n pl *-aat*/ *[mus]* refrain, recurring passage in an instrumental piece.

تسليمة *tasliima* = *tasliim*.

اتسلّم *ʔitsallim* or *ʔissallim* /vi/ passive of *sallim*. - iva *mitsallim*.

تسلّم *tasallum* /vn/ receipt.

مسالم *misaalim* /adj/ peaceful, calm.

أسلم *ʔaslam*[2], *ʔislam* /vi/ to become a Muslim. - vn *ʔislaam*; ava *muslim*.

الإسلام *ʔil-ʔislaam* /prop n/ Islam.

إسلامى *ʔislaami* /adj */ Islamic.

مسلم *muslim* /n */ a Muslim. see further under م س ل م

استلم *ʔistalam* /vt/ to receive, accept. *baɣd*[i] *ma stalamt iʃ-ʃahaada kunt*[i] *b-axud-ha lil-maktab* after I got the certificate I used to take it to the office. *ʔir-rayyis bi-yistilim ṭalabaat iz-zabaayin* the waiter takes the orders of the customers. ‖ *ʔistalam ʃuɣl(-u)* he started work. - vn *ʔistilaam*; ava *mistilim*.

استسلم *ʔistaslim* /vi/ to give in, surrender. *ʔistaslimt*[i] *l-naṣiib-i* I surrendered to my fate. - vn *ʔistislaam*; ava *mistaslim*.

س ل م [2]

سلّم *sillim* /n pl *salaalim*/ **1** staircase, stairs. *ṭiliɋna is-sillim illi ywaddi ɣal-balakoona* we climbed the stairs leading to the balcony. **2** ladder. ‖*sillim il-ɋafz* diving-board. - *ʔis-sillim wit-tiɣbaan* snakes and ladders (children's game). **3**↑ *[mus]* scale.

سلّمة *sillima* /n pl *-aat, salaalim*/ step (of a stairway).

سلّماية *sillimaaya* = *sillima*.

س ل م [3]

سلّمية *sallamiyya* /n pl *-aat*/ *[mus]* smallest member of the *naay* family with a high-pitched tone. - see also *ḥuffaaṭa* and *ɣuffaaṭa*.

س ل م [4]

س ل م see س ل ل و م : *salluum*

س ل م ك ك

سلمكّة *salamikka* /coll n/ senna, senna pod(s), senna leaflet(s). - also *sanamikka*.

س ل م ل ك

س ل م [1] see س ل م ك : *salamlik*

س ل م ن

سلمون *salamun* <prob Engl *salmon*> /n/ name used loosely for several kinds of tinned fish (e.g. mackerel).

س ل ن د ر

سلندر *silindar* (also *ʃilindar*) <Engl> /n pl *-aat*/ *[mech]* cylinder.

س ل و ¹
سلا *sala¹ (a)* /vt/ to get over (the memory of), forget, put out of one's mind. *fuufi ħadd^i yxallii-ki tisli l-ħuzn^i da* find someone who will help you forget this sorrow. - vn *silwaan, suluww*; ava *saali*; pva *masli*.
سلوان *silwaan* /vn/ consolation, comfort.
سلوانة *silwaana: ħilwaana f-silwaana* by stealthy degrees. *ʕamaluu-ha ħilwaana f-silwaana w-xallaṣu l-ʕakl* by stealthy degrees they managed to polish off all the food. *qaʕadu ykallimuu-ni w-ħilwaana f-silwaana laqet-hum mikattifin-ni* they went on talking to me till I found they'd tied me up without my realizing it. *ga qaʕad maʕaana marra w-baʕdeen ʕamal-ha ħilwaana f-silwaan wala ʕad-f^i bi-ysib-na* he sat with us once and then, somehow or other, he ended up never leaving us.
سلوى، سلوة *salwa* /n/ consolation, comfort. *salwit-i f-samaʕ il-mazziika l-xafiifa* I relax by listening to light music.
سلّى *sallā²* /vt/ 1 to divert the mind from, take one's mind off. *salli ʿulb-ak* (or *hamm-ak*) keep your mind off things. *salli ṣyaam-ak* take your mind off the fast (it will be easier to endure). ‖*salli waqt-ak* keep busy, fill your time. 2 to amuse, divert. *ħafla musalliyya* an entertaining party. - vn *tasliyya*; ava *musalli*; ava/pva *misalli*.
تسلّية *tasliyya* /n pl *tasaali*/ amusement, pastime.
تسالى *tasaali* /pl n/ snacks.
مسلّيات *musalliyaat* /pl n/ 1 amusements, diversions. 2 assorted nuts, chick-peas, melon and sunflower seeds etc., consumed to kill time.
اتسلّى *ʔitsalla* or *ʔissalla* /vi/ to find amusement or diversion, fill up time. *bi-ygib-lu salaṭaat yissalla fiiha wi-titfitiḥ fahiyyit-u* he brings him salads to busy himself with and to whet his appetite. *bi-yissalla ʕaleena* he amuses himself at our expense. *mizawwar min fuxl-u w-gaay yissalla fil-ʕiyaada* he's staying away from work and comes to fritter away his time in the clinic. *bi-yitsalla bil-ʔakl* he kills time by eating. - iva *mitsalli*.

س ل و ²
سلو *silw* /n/ custom, habit, tradition.

س ل و ع see also س ل ع و
مسلوع *misalwaʕ* /adj */ skinny, scraggy.

س ل و ق see also س ل ق ¹
سلوق *salwaq* /vt/ to do or perform in a hasty, slipshod manner. - vn *salwaqa*; ava/pva *misalwaq*.
اتسلوق *ʔitsalwaq* or *ʔissalwaq* /vi/ passive of *salwaq*. - vn *tisalwiiq*; iva *mitsalwaq*.

س ل و ى ت
سيلويت *siluweet* <Fr> /n/ silhouette, image cut out from dark material and mounted on a light background.

س ل ى ¹
سلى *sala² (i)* /vt/ to melt (butter), render down (fat). - vn *saly*; ava *saali*; pva *masli*.
مسلى *masliʔ* /n/ clarified butter.
اتسلى *ʔitsala* or *ʔissala* /vi/ 1 passive of *sala²*. 2 to lose weight. - ava/iva *mitsili*.
انسلى *ʔinsala* = *ʔitsala*. - ava/iva *minsili*.

س ل ى ² see س ل و ¹ : *tasliyya, tasaali, misalliyyaat*

س ل ى م –
سليماني *sulaymaani* <perh T *sülümen*> /n/ mercuric chloride.

س م ا ر
سمار *samaar¹* /coll n/ rush(es).
سمارة *samaara* /unit n, pl *-aat*/ a reed, a rush.

س م ب س ك see س ن ب س ك

س م ب ك see س ن ب ك

س م ب ك س see س ن ب س ك

س م ب ل see س ن ب ل

س م ت ر ي
سمتريّة *simitriyya* <It *simmetria*> /n/ symmetry, evenness. *xallii-ha kull-a-ha simitriyya waħda* make it all even.

س م ت و ت see س ح ت و ت : *samtuut*

س م ج
سمج *simig* /adj * and pl *sumaga*/ boorish, churlish, loutish.
أسمج *ʔasmag* /el/ more/most boorish, etc.
سماجة *samaaga* /n/ boorishness, loathsomeness.

س م ح
سمح *samaħ (a)* /vi/ to give permission. *samaħt-i-lu bil-kalaam* I allowed him to speak. *m-asmaħ-f^i l-ħadd^i (b-ʔinnu) yudxul beet-i* I don't allow anyone to enter my house. *ʔismaħ-li ʔaqul-lak* permit me to inform you .... *ʕadad ir-rukkaab il-masmuuħ (bii)* the permitted number of passengers. ‖*tismaħ* would you mind, as in

tismaḥ tiqul-li l-mudiir feen could you tell me where the director is? - *ʕismaḥ-li* excuse me. - *law samaḥt* (if you) please. - *la samaḥ allaah* God forbid! - vn *samaaḥ*; ava *saamiḥ*; pva *masmuuḥ*.

سماح *samaaḥ* /n/ permission, leave. ‖*samaaḥ il-marraa-di* pardon this time, as in *samaaḥ il-marraa-di bass*[i] *ma-tiʕmil-haa-ʃ taani* I'll let you off this time, but don't do it again, *samaaḥ il-marraa-di min faḍl-ak* please let me off the hook this time. - *ʔahl is-samaaḥ il-milaaḥ* nice people.

سماحة *samaaḥa* /n/ **1** generosity, kindness. **2** title accorded to a non-Egyptian mufti.

مسموحات *masmuḥaat* /pl n/ articles allowed through customs without payment of duty.

سمح *simiḥ* /adj */ kind, forgiving. *ʔalb-u kull-u raḥma w-nifs-u simḥa* he's a very merciful and forgiving man. ‖*wiff*[i] *simiḥ* cheerful, kindly face.

سامح *saamiḥ* /vt/ to pardon, forgive. *ʔallaah yisamḥ-ak* God forgive you! (to one who has wronged another). *ʔil-misaamiḥ kariim [prov]* ≈ to forgive is generous. - vn *misamḥa, musamḥa*; ava *misaamiḥ*.

مسامحة *musamḥa* **1** /vn/ forgiveness, pardon. **2** /n pl -*aat*/ *[obsol]* vacation, holiday(s).

اتسامح *ʔitsaamiḥ* or *ʔissaamiḥ* /vi/ **1** to be tolerant, big-hearted or indulgent. **2** to be forgiven. - vn *tasaamuḥ*; ava/iva *mitsaamiḥ*.

استسمح *ʔistasmaḥ* /vt/ **1** to ask (s.o.) for forgiveness. *ʔuqṣuri ʃ-ʃarr*[i] *wi-stasmaḥii* put an end to the unpleasantness and ask him for forgiveness. **2** to ask permission of. *ʔistasmaḥt*[i] *maama fil-mirwaḥ lis-siima* I asked mother if I could go to the cinema. *ʔastasmaḥ-ak* ≈ would you permit me, please .... - vn *ʔistismaaḥ*; ava/pva *mistasmaḥ*.

س م د

سماد *samaad, simaad* /n pl *ʔasmida*/ fertilizer. *simaad baladi* organic fertilizer, manure. *simaad kimaawi* chemical fertilizer.

سمّد *sammid* /vt/ to fertilize, manure. - vn *tasmiid*; ava/pva *misammid*.

اتسمّد *ʔitsammid* or *ʔissammid* /vi/ to be fertilized, be manured. - iva *mitsammid*.

س م ر[1]

سمر *samar*[1]: *ʔaʕdit samar* an evening party. *ḥaflit samar* an evening party or gathering in the open air (usually around a camp-fire).

سمير *samiir* /n pl *summaar*/ a participant in a *musamra*.

سامر *saamir*[1] /n/ informal evening performance of traditional entertainments (i.e. skits, singing). ‖*masraḥ is-saamir* government-sponsored theatre which promotes traditional entertainments.

سامر *saamir*[2] /vt/ to spend the evening with (s.o.) in pleasant conversation. - vn *musamra, misamra*; ava *misaamir*.

مسامرة *musamra, misamra* /n pl -*aat*/ evening spent in conversation with friends.

مسامر *misaamir* /n */ a participant in a *musamra*.

اتسامر *ʔitsaamir* or *ʔissaamir* /vi/ to spend a pleasant evening chatting (with one's intimates). *ʔadii-na b-nitsaamir nitḥaddit ʃiwayya w-nidḥak ʃiwayya* here we are, passing the night with a few stories and a few laughs. - ava *mitsaamir*.

س م ر[2]

مسمار *musmaar* /n pl *masamiir, masamiir*/ **1** nail, screw or nail-like device (e.g., fracture-pin, pointed cold chisel). ‖*musmaar raas* tack, drawing-pin. - *musmaar ʕeen* fine-toothed rasp. - *musmaar gadoon* steering-rod (of a bicycle). - *ʔil-ʔakl*[i] *da musmaar baṭn* ≈ this food sticks to your ribs. - *musmaar-u fiṣ-ṣadr* ≈ he's a drag and always around. - *musmaar guḥa* pretext, excuse to keep one's foot in the door, as in *bi-yquul ʔinn*[i] *ʔisraʔiil musmaar guḥa l-ʔamriika* he says that Israel is America's excuse for keeping her foot in the door. **2** corn (on the foot). **3** metal strap or clamp. **4** (a single) quilt-stitch. **5** (also *laban musmaar*) colostrum. see further under م س م ر

سمّر *sammar* /vt/ **1** to nail. *sammaru l-loḥeen ʕala baʕḍ* they nailed the two planks together. **2** to quilt-stitch. - vn *tasmiir, tasmiir*; ava/pva *misammar*.

اتسمّر *ʔitsammar* or *ʔissammar* /vi/ **1** to be nailed. **2** to be quilt-stitched. - iva *mitsammar*.

س م ر[3]

سمريّة *sumuriyya* /n/ brownness, darkness (of skin).

أسمر *ʔasmar* /adj, fem *samra*, pl *sumr*/ **1** dark-skinned. ‖*ʔin kunt*[a] *ʕaayiz titmasxar quum labbis il-ʔasmar ʔaḥmar [prov]* ≈ if you want to mock a man put him in an unsuitable situation. **2** *[euphem]* black.

أسمراني *ʔasmaraani* /adj/ dark-skinned, of dark complexion.

سمار *samaar*[2] /n/ brownness, darkness (of skin).

اسمرّ *ʔismarr* /vi/ to brown, turn brown, tan. - ava *mismirr*.

استسمر *ʔistasmar*[1] /vt/ **1** to consider (excessively) dark or brown. **2** to select for brownness or darkness. - ava *mistasmar*.

س م ر [4]

ثمر *tamar (a, u)* /vi/ to bear fruit (in the form of gratitude). *ʃil-maɣruuf ma-yitmar-ʃ[i] fii* he shows no gratitude for favours done him. *ɣal-alla yitmar fiik* I hope you appreciate it! - vn *tamaraan*; ava *taamir*.

ثمر *samar[2]* /coll n/ **1** (rare or exotic) fruit(s). **2** product, yield. ‖*samar ir-rooḥ [Chr]* the fruit of the Spirit.

ثمرة *samara* /n pl *-aat*/ **1** /unit n/ a fruit. *ʃagarit il-ɣiʃta bi-tgiib ḥawaali ɣaʃar samaraat fis-sana* the custard-apple tree yields about ten custard-apples a year. **2** yield, fruit. *ʃeeh samarit it-taɣab da kull-u* what is there to show for all that effort?

ثمّر *tammar[2]* /vi/ *[rur]* to produce seeds or fruit (of plants and trees). - vn *tatmiir*; ava *mitammar*.

استثمر *ʃistasmar[2]* /vt/ to invest (especially money). - vn *ʃistismaar*; ava *mustasmir*; pva *mustasmar*.

استثمار *ʃistismaar* /n pl *-aat*/ investment. ‖*ʃihaadit istismaar* savings certificate.

مستثمر *mustasmir* /n */ investor.

س م ر [5]

سمّور *sammuur* /n pl *samamiir*/ *[zool]* sable (Martes zibellina). *gild[i] sammuur* sable skin. *farw[i] sammuur* sable fur.

س م ر [6] see ص م ر : *samar[3]*

س م س see ش م س : *sams*

س م س ر

سمسار *simsaar* /n pl *samasra, samasra*/ agent. *simsaar burṣa* stockbroker. *simsaar ɣarabiyyaat* car dealer.

سمسر *samsar* **1** /vi/ to act as a broker or middleman. **2** /vt/ to net or gain as a middleman. *samsar miit gineeh fil-ɣamaliyya* he made a hundred pounds on the deal. - vn *samsara*; ava *misamsar*.

س م س م

سمسم *samsim* /vt/ to make delicate, give a delicate shape or form to. - vn *samsama*; ava/pva *misamsim*.

مسمسم *misamsim* /adj */ delicate-featured (of a face).

سمسم *simsim* <cf Copt> /coll n/ sesame (seeds). *ɣeef ʃabu simsim* bread covered with sesame seeds. ‖*musmaar simsim* small nails. - *ʃiftaḥ ya simsim* open Sesame!

سمسمة *simsima* /unit n, pl *-aat*/ a sesame seed. ‖*xalla raɋabt-i zayy is-simsima* he made me feel small. - *ɋadd is-simsima wi-tgiib il-xeel milaggima - kilma* (riddle:) the size of a sesame seed and (yet) it can bring the horses all bridled; (answer:) a word.

سمسميّة *simsimiyya* /n pl *-aat*/ **1** sweets or pastries with sesame seeds. **2** stringed musical instrument, particular to the Suez Canal region (see Pl.J, 4).

اتسمسم *ʃitsamsim* or *ʃissamsim* /vi/ to be made delicate, be delicately formed. - iva *mitsamsim*.

س م ط [1]

سمط *samaṭ (u)* /vt/ **1** to scald (e.g., poultry to remove feathers, or tripe, tongue etc. to remove skin). **2** *[rur]* to heat to a high temperature (in order to sterilize). *bi-yusmuṭu l-mataarid fil-furn[i] ɋabl[i] ma yṣubbu l-laban fiiha* they sterilize the crocks in the oven before pouring the milk into them. - vn *samṭ, samaṭaan*; ava *saamiṭ*; pva *masmuuṭ*.

مسمط *masmaṭ* /n pl *masaamiṭ*/ shop or restaurant specializing in brain, tongue, trotters and other variety meats or offal.

اتسمط *ʃitsamaṭ* or *ʃissamaṭ* /vi/ passive of *samaṭ*. - iva *mitsimiṭ*.

سمّط *sammaṭ* = *samaṭ*. - vn *tasmiiṭ*; ava *misammaṭ*.

اتسمّط *ʃitsammaṭ* or *ʃissammaṭ* = *ʃitsamaṭ*. - iva *mitsammaṭ*.

س م ط [2] see س م ى ط : *simiiṭ, simiiṭa*

س م ع

سمع *simiɛ (a)* /vi/ **1** to hear, be able to hear. *ʃaṭraf ma-b-yismaɛ-ʃ* he's deaf - he can't hear. **2** to receive information, receive news. *ma-simiɛt[i]-ʃ ɣannu ʃabadan* I've never heard of him. *ma-smiɛtuu-ʃ ɣan taḥṣiin il-bahaayim* haven't you heard of immunizing cattle? **3** to listen, be attentive. *lamma ʃakallim-ak tismaɛ* when I talk to you, you listen. ‖*yismaɛ minnak rabb-i-na* may God answer your prayer! - *ʃismaɛ min hina w-fawwit min hina* let it in one ear and out the other. — /vt/ **4** to hear. *simiɛt ig-garas bi-yiḍrab* I heard the bell ring. ‖*wi-min simiɛ* same here, as in *ʃana gaɛaan moot - wi-min simiɛ(-ak)* 'I'm starving!' 'Me too!' - *ʃismaɛ simiɛt ir-raɛd[i] f-widaan-ak [abus]* damn it! pay attention, will you! **5** to listen to. *b-aḥibb asmaɛ ir-radyu* I like to listen to the radio. ‖*simiɛ kalaam-u* (1) he paid attention to what he said. (2) he obeyed him, he heeded his words. - *kilmit-u masmuuɛa* his word carries weight. - vn *samaɛ, samaaɛ, samaɛaan*; ava *saamiɛ*; pva *masmuuɛ*.

مسموع *masmuuɛ* /adj/ audible.

سمع *samɛ, samaɛ* /n/ hearing, sense of hearing. *samɛ-i tɋiiil ʃiwayya* I'm a bit hard of hearing. ‖*taḥt[i] samɛ[i]*

w-baṣar il-buliiṣ under the very noses of the police. - *ʃis-samɛ' wiṯ-ṯaaɛa* or *samɛan wa-ṯaaɛa* I hear and obey! at your service! *samaɛ huss* hush!

سمعة *sumɛa* /n/ **1** reputation. *sabaq-u suuʃ sumɛit-u* his bad reputation went before him. **2** nickname for the given name Ismail.

سماعى *samaaɛi* **1** /adj/ aural. -/adverbially/ *bi-tiɛzif samaaɛi* do you play by ear? **2** /n/ *[mus]* **2a** vocal or instrumental piece consisting of three sections, each followed by a refrain, and a final section in a different rhythm, followed by the same refrain. **2b** *(samaaɛi tqiil* and *samaaɛi ṯaayir*) specific rhythmic beats.

سميع *samiiɛ* /n/ All-hearing One (epithet of God).

سمّاعة *sammaaɛa* /n pl *-aat*/ **1** loudspeaker. **2** telephone receiver. **3** earphone. **4** stethoscope.

سمّيع *sammiiɛ* /n pl *sammiiɛa*/ connoisseur (of music).

مسمع *masmaɛ* /n pl *masaamiɛ*/ **1** range of hearing, earshot. *ɛala masamiɛ-hum* or *ɛala masmaɛ minhum* within earshot of them. **2** *[mus]* passage.

اتسمع *ʃitsamaɛ* or *ʃissamaɛ* /vi/ passive of *simiɛ*. - iva *mitsimiɛ*.

انسمع *ʃinsamaɛ* = *ʃitsamaɛ*. - iva *minsimiɛ*.

سمّع *sammaɛ* /vt/ **1** to cause to hear. *b-asammaɛ-u l-ḥaqiiqa* I make him listen to the truth. *bi-tzaɛɛaq kida leeh da-nta bi-tsammaɛ ʃaaxir iʃ-ʃaariɛ* why are you shouting like that - they can hear you at the other end of the street! **2a** to recite (e.g., a lesson). *sammaɛ ɛala ʃ-ʃeex* recite to the sheikh (so he can correct your mistakes). **2b** to listen to the recitation of (e.g., a lesson). *sammaɛt-i-lu d-dars* I listened to him reciting the lesson. — /vi/ **3a** to echo, reverberate. *ʃiṣ-ṣoot bi-ysammaɛ fil-ḥammaam* sound echoes in the bathroom. **3b** to radiate, be felt (of pain). *ʃil-wagaɛ illi f-baṭn-i bada ysammaɛ fi-ḍahr-i* the pain in my stomach began to be felt in my back. *wagaɛ misammaɛ* referred pain, synalgia. *wik-kuḫḫa lamma ʃakuḫḫ' tasammaɛ fi-maṣariin-i* when I cough I feel it in my guts. - vn *tasmiiɛ*; ava/pva *misammaɛ*.

اتسمّع *ʃitsammaɛ* or *ʃissammaɛ* /vi/ passive of *sammaɛ*. - iva *mitsammaɛ*.

استمع *ʃistamaɛ* /vi/ to listen. *ʃis-saaɛa talaata ḥa-nistimiɛ li-xṭaab ir-raʃiis* we shall listen to the President's speech at three o'clock. *ʃiza kaan illi b-yitkallim magnuun yikuun il-mistimiɛ ɛaaqil [prov]* even with a fool speaking one should listen wisely. - vn *ʃistimaaɛ*; ava *mistimiɛ, mustamiɛ*↑.

استماع *ʃistimaaɛ* /n/ auditioning. *lagnit istimaaɛ* audition board (for radio and television).

مستمع *mustamiɛ* /n */ listener. *ḥaḍaraat il-mustamiɛiin il-kiraam* dear listeners!

س م غ

صمغ *samɣ* or *ṣamɣ* /n/ **1a** gum, resin. ‖*nidwiyyit samɣ* type of gummy blight. **1b** gum arabic. **2a** mucilage. **2b** glue.

صمغى *samɣi* or *ṣamɣī* /adj/ gummiferous.

صمّغ *sammaɣ* or *ṣammaɣ* /vt/ **1** to stick with gum, glue. *laazim yisammaɣu ṭ-ṭuruud wi-yixtimuu-ha qabl it-tasliim* they must gum and seal the packages before delivery. **2** to size (cloth, paper etc.) with gum arabic. *yisammaɣ-u l-ḥariir baɛd it-taghiiz* they size the silk after the dressing. **3** to cause gumming in. *fii nooɛ min il-ʃamraaq bi-ysammaɣ il-quṭn* there's a kind of disease which gums up the cotton (bolls). — /vi/ **4** to contract gummy blight (of a plant). *ʃil-quṭn' sammaɣ* the cotton has become infected with gummy blight. - vn *tasmiiɣ*; ava/pva *misammaɣ*.

تصميغة *tasmiiɣa* /n/ type of gummy blight.

اتصمّغ *ʃitsammaɣ, ʃiṭṣammaɣ* or *ʃissamaɣ, ʃiṣṣammaɣ* /vi/ passive of *sammaɣ*. - iva *mitsammaɣ*.

تصمّغ *tasammuɣ, taṣammuɣ* /n/ type of gummy blight.

س م ق

سمّاق *simmaaq* /n/ *[bot]* sumac (Rhus coriaria).

س م ك [1]

سمك *samak* /coll n, pl *ʃasmaak*/ fish. ‖*samak laban tamr' hindi* incongruous mixture. -*samak fi-mayya* (as slippery as) a fish in water, as in *ʃil-mawḍuuɛ da samak fi-mayya* that matter is hard to grasp. -*zayy is-samak (yaakul baɛḍ-u)* ≈ bloodthirsty (especially of relatives). -*qaalu s-samak bi-yṭallaɛ naar - qaal kaanit il-mayya tiffii [prov]* (They said 'The fish spouts fire'. He said 'The water would extinguish it'.) ≈ question the logic of everything you hear.

سمكة *samaka* /unit n, pl *-aat*/ **1** a fish. ‖*qaṭṭaɛ is-samaka w-del-ha* (he's cut the fish and its tail) ≈ he is worldly and experienced. **2** gusset.

سمكاية *samakaaya* = *samaka*.

سمّاك *sammaak* /n * and pl *sammaaka*/ fishmonger.

س م ك [2]

سمك *sumk* /n/ thickness.

سميك *samiik* /adj/ thick.

أسمك *ʃasmak* /el/ more/most thick.

س م ك ر

سمكر، سنكر *samkar* (also *sankar*) /vt/ to do metalwork on. *ʃil-ɛarabiyya ɛayza samkara* the car needs bodywork. - vn *samkara*; ava/pva *misamkar*.

سمكرى، سنكرى *samkari* (also *sankari*) <P *sîm-gar*>

/n pl *-yya/* metal-worker, panel beater. ‖*samkari mawasiir* pipe maker.

س م ل ل
سملّة *similla* <Fr *semelle*> /n pl *-aat/ [constr]* groundsill.

[1] س م م
سمّ *samm[1] (i)* /vt/ to poison. - vn *samm, samamaan*; ava *saamim*; pva *masmuum*.
سامّ *saamm↑* /adj */ **1** poisonous. *vazaat saamma* poison gasses. **2** venomous.
مسموم *masmuum* /adj */ poisoned, containing poison. ‖*kul - ʃinta masmuum* eat up; are you sickening for something?
سمّيّة *summiyya* /n/ poisonousness.
سمّيّات *summiyyaat* /pl n/ poisonous substances.
سمّ *simm, summ, samm[2]* /n pl *simuum, sumuum*/ **1** poison. ‖*simm[i] faar [bot]* ratsbane. *-ṭabbaax is-simm[i] laa budd[i] yduuq-u [prov]* (the cook of poison will taste it) ≈ one is bound to have a share of what one produces. *-damm-u zayy is-simm* ≈ he's a bore. **2** *[women and children]* something or someone unpleasant. *-da simm* that (or he) is horrid! ‖*ya simm (ʕala)* ≈ how horrid (of), how beastly (of), as in *ya simm[a] ʕaleeku - laazim tiʕmilu kida* you beasts, do you have to do that?
سمّاوى *simmaawi* /n * and pl *-yya/* **1** poisoner. **2** stray-dog catcher.
سموم *samuum* /n/ simoom.
اتسمّ *ʃitsamm* or *ʃissamm* /vi/ to be poisoned. - iva *mitsamm*.
انسمّ *ʃinsamm = ʃitsamm.* ‖*ʕumr-u ma-nsamm[i] f-badan-u w-iftaxal bi-zimma [iron]* (the poison of honest work has never entered his body) ≈ he hasn't done an honest day's work in his life. - iva *minsamm*.
سمّم *sammim* /vt/ to poison. *bi-tḥuṭṭii-li ʃeeh fiṭ-ṭabiix - tisammimii-ni* what are you putting in the food? you're poisoning me! - vn *tasmiim*; ava/pva *misammim*.
اتسمّم *ʃitsammim* or *ʃissammim* /vi/ to be poisoned. ‖*ʃiddii-lu yitsammim [abus]* ≈ let him choke on it! - iva *mitsammim*.
تسمّم *tasammum* /n/ poisoning.
مسمّم *musimm* /adj */ **1** poisonous. **2** venomous.

[2] س م م
مسامّ *masaamm↑* /coll n, pl *-aat*/ pores.
مساميّة *masammiyya↑* /n/ porosity.

[3] س م م
ثمّ *summa↑* /conj/ **1** then. *fi-ʃawwil iṭ-ṭabuur il-ʃaṭfaal summa l-ʃummahaat* first in the line are the children, then the mothers. **2** furthermore, moreover. *summa ʃinnak laazim tiigi li-waḥd-ak* what's more, you must come alone.

[1] س م ن
سمن *simin (a)* /vi/ to grow fat, put on weight. - vn *simna, samaana*; ava *samnaan*.
سمن *samn* (also *samn[i] baladi*) /n/ clarified butter, ghee. ‖*samn[i] ṣnaaʕi* or *samn[i] hulandi* cooking fat made of a mixture of vegetable or animal and vegetable fats. *- samn[i] nabaati* preparation of vegetable fats for cooking. - *ʃis-samn[a] ʕala l-ʕasal* (as complementary as) butter and honey, as in *ʃiṣṭalaḥu w-rigʕu zayy is-samn[a] ʕal-ʕasal* they made up and were once again like two lovebirds.
سمنى *samni* /adj invar/ cream coloured.
سمنة *samna = samn.*
سمانى *samaani: balaḥ samaani* variety of large round orange-coloured date.
سمين *simiin* /adj/ **1** fat, fatty. ‖*muxx-u smiin* he's stupid. **2** /pl *sumaan*/ (also *simiin malyaan*) fat, overweight, obese. ‖*raagil simiin* (1) a fat man. (2) a rich man. (3) a good catch (for marriage). — /n/ **3** fat. *bi-naakul il-laḥma l-ḥamra bass - ma-b-naakul-ʃ is-simiin* we eat only the lean meat, not the fat.
أسمن *ʃasman* /el/ more/most fat, obese etc.
سمّانة *sammaana[1]* /n/: *sammaanit ir-rigl* the calf of the leg. *sammaanit d-diraaʕ* the biceps.
سمّن *sammin* **1** /vt/ to fatten. *maḥaṭṭit tasmiin* calf-fattening station. **2** /vi/ to become fatty or greasy (of food). - vn *tasmiin*; ava *misammin*.
اتسمّن *ʃitsammin* or *ʃissammin* /vi/ to be fattened. - iva *mitsammin*.
استسمن *ʃistasmin* /vt/ **1** to consider (excessively) fat. **2** to select as (sufficiently) fat. - vn *ʃistismaan*; ava *mistasmin*.

[2] س م ن
سمّان *simmaan, sammaan* /coll n/ quail.
سمّانة *simmaana, sammaana[2]* <cf Copt> /unit n, pl *-aat*/ a quail.

[3] س م ن see [1] ت م ن : *samiin*

س م و
سما، سماء *sama* /n pl *samawaat*/ sky; heaven. ‖*ḥaaṭiṭ manaxiir-u fis-sama* he has his nose in the air, he is stuck-up. *-li-rabb is-sama* spectacular, as in *ʕawwimu xnaaʕa l-rabb is-sama* they started a fight to end all

fights! - *ʕaadi s-sama w-ʕaadi l-ʕarḍ* (here is the sky and here is the earth) ≈ I have nothing.

سماوى *samaawi* /adj/ **1** sky-blue. **2** open to the sky. *manwar samaawi* open-sky light well. **3** *[Chr]* heavenly.

سموّ *sumuww↑, simuww, simiww* /n/ loftiness, exaltedness. *simmuww il-ʕaxlaaq* nobility of character. ‖*ṣaaḥib is-simuww il-malaki* His Royal Highness.

سامى *saami* /adj/ high, exalted, lofty, sublime. *ʕaxlaaq-ha samya* she has a noble character. ‖*ʕamr[i] saami* royal decree. - *ʕil-manduub is-saami* the High Commissioner.

أسمى *ʔasmaʕ↑* /el/ more/most high, exalted etc.

س م ي see also ء س م

سمىّ *samiyy↑* /n/ namesake.

سمّى *samma* **1** /vt/ to name, call (s.o. or s.th.) by a name. *fil-balad bi-ysammuu-ni ḥasan* at home in the village they call me Hasan. *di bi-ysammuu-ha ʕagaazit waḍɛ* they call this 'maternity leave'. **2** /vi/ to pronounce the formula *bi-sm illaah ir-raḥmaan ir-raḥiim*. ‖*ma-fii-ʃ ḥadd[i] samma ɛaleek* no one gave you a helping hand. -vn *tasmiyya, tasmiya↑*; ava/pva *misammi*; pva *musamma*.

مسمّى *musamma* /pva/ named. ‖*ʕism[a] ɛala musamma* an apt name which fits its bearer. - *ʕila ʕagal musamma* for a certain period. - *ʕila ʕagal ɣeer musamma* until further notice, *sine die*.

اتسمّى *ʕitsamma* or *ʕissamma* /vi/ to be called, be named. ‖*ʕilli ma-yitsammaa-ʃ* insulting form of reference, in which mention of the name of the person referred to is deliberately avoided ≈ who had better remain nameless. - *ʕilli ma-yitsammuu-ʃ [women in trad soc]* superstitious form of reference to spirits ≈ those who are not to be named. -iva *mitsammi*.

س م ى ط

سميط *simiiṭ* <cf Copt> **1** /coll n/ sticks or rings of bread, often sprinkled with sesame seeds, eaten either fresh or dried. **2** /n/ (also *diqiiq is-simiiṭ*) semolina.

سميطة *simiiṭa* /unit n, pl *-aat*/ a piece of *simiiṭ*.

س ن see also [2] س ن ن and [1] س ن و

سنة *sana* /n pl *siniin, sanawaat*/ year. *baɛd[i] ʕarbaɛ siniin* after four years. *ɛandu kaam sana* how old is he? *ɛandu sanateen* he is two years old. *sanat ʕalf[i] w-tusɛumiyya tisɛa w-sabɛiin* (in) the year 1979. *ʕuxt-i s-sanaa-di ɛazmaa-ni ɛandaha* my sister has invited me to her place this year. ‖*quṭɛit il-ʕutubisaat wi-sniin il-ʕutubisaat* ≈ damn all buses! - *ya sana sooda [women]* ≈ oh woe! - *kull[i] sana wi-nta ṭayyib* conventional greeting at celebration of annually occurring feasts ≈ many happy returns! happy Christmas! etc. - *ɛuqbaal miit sana* conventional birthday greeting ≈ may you live to be a hundred! - *qabl il-hana b-sana* too early.

مسانيّة *misaniyya* /n pl *-aat*/ yearly payment in kind made to village tradesmen for services rendered.

[1] س ن ء see [1] ت ن ى : *ʕasnaaʕ, ʕistisnaaʕ, ʕistisnaaʕi*

[2] س ن ء see [2] ت ن ى : *sunaaʕi*

س ن ب س ك

سنبوسكة *sambuska* (also *sambuksa*) <P *sanbûsak*> /n/ **1** triangular shape. *fuuṭit sufra mṭabbaqa sambuska* a napkin folded to form a triangle. **2** type of sweet pastry formed in triangles. — /pl *-aat*/ **3** anything of triangular or rhomboid shape.

س ن ب ك

سنبك، سمبك *sumbuk* /n pl *sanaabik*/ *[mech]* round punch, (farrier's) pritchel, drift-pin.

س ن ب ك س see س ن ب س ك : *sambuksa*

[1] س ن ب ل

سنبل *sambil* /vt/ to put forth ears (of wheat, barley etc.). -vn *sambala*; ava *misambil*.

سنبل، سمبل *simbil* /coll n/ **1** heads, ears (of wheat or barley). **2** male inflorescences (of maize).

سنبلة، سمبلة *simbila* /unit n, pl *-aat, sanaabil*/ a head, an ear (of wheat or barley), a male inflorescence (of maize). ‖*lamba b-simbila* a small open-flame tin oil-lamp used in rural areas (see Pl.B, 2).

السنبلة *ʕis-sumbula, ʕis-simbila* /n/ *[astrol]* Virgo.

سنبليّة *simbiliyya* = *simbila*.

[2] س ن ب ل

سنبلة *sumbula* /n/ *[mus]* name given to the note E flat (on the third space of the staff).

س ن ت ر see [1] س ن ط ر : *santar, sintar*

(س ن ت ر –)

سنترال *sintiraal* <Fr *centrale*> /n pl *-aat*/ telephone exchange.

سنترفيش *santarafiiʃ* <Fr *centrifuge*>: *sukkar santarafiiʃ* granulated sugar.

س ن ت م –
سنتيمتر *santimitr* <Fr> /n pl *-aat*/ centimetre. - also *santi*.

س ن ت و ل see س ن ت و ن : *sana'ool*

س ن ت و ن
سنتون *sanitoon* (also *sanatool*) /n/ matt paint (for walls).

س ن ت ى
سنتى *santi* <Fr *centimètre*> /n/ centimetre. - also *santimitr*.

س ن ت ى ر
سنتير *sinteer, santiir* (also *ramy is-sinteer*) <Fr *ceinture*> /n/ body hold and throw (in wrestling).

س ن ت ى ن
سنتينة *santiina* <It *sentina*> /n/ bilge, bilge water. - also *sartiina*.

س ن ت ى –
سنتيال *sintiyaal, suntiyaal* = *sintiyaan*.
سنتيان *sintiyaan, suntiyaan* <Fr *soutien*> /n pl *-aat*/ brassiere. - also *sutyaan*.

(س ن ج)
سنجة *singa*[1] <T *süngü*> /n/ bayonet. ‖*ɛaṣaaya fiiha singa* sword-cane, sword-stick.
سنجة *singa*[2] /n pl *sinag*/ **1** weight (of a balance scale). ‖*ɛala singit ɛafara* (dressed) to the nines. **2** contact pole, arm (of a trolley-bus or the like).

س ن ج ا ب
سنجاب *singaab* <P *sinjâb*> /n pl *sanagiib*/ squirrel.
سنجابى *singaabi* /adj/ ash-coloured.

س ن ج ق
سنجق *sangaq* <T *sancak*>: *sangaq labanda [naut]* hard a-starboard!

س ن ح
سنح *sanaḥ (a)* /vi/ to offer itself, present itself (of, e.g., a thought, an opportunity). - vn *sunuuḥ, sinuuḥ, sanaḥaan*; ava *saaniḥ*.
سنّح *sannaḥ* /vi/ to pretend not to hear, feign inattention. - vn *tasniiḥ*; ava *misannaḥ*.

س ن د [1]
سند *sanad*[1] *(i)* /vt/ to support. *ḥizaam saanid liḍ-ḍahr* back-supporter. *lamma yuqaɛ yilaaqi lli yisnid-u* when he's in trouble he'll find people to support him. ‖*masnuud ɛala ḥeeṭa mayla* (leaning on a leaning wall) ≈ depending on shaky support. - *kul ḥaaga tisnid-ak* eat something to keep you going. - vn *sand, sanadaan*; ava *saanid*; pva *masnuud*.
سند *sand* /n/ support. ‖*kutla sand [naut]* cross-pawl, timber support attached to the upper parts of the wooden frame of a boat (to keep the ribs properly spaced until the deck beams are in place).
سندة *sanda* /n pl *-aat, sanaayid*/ **1** brace, support. **2** dolly block. *sanda rigl* L-shaped dolly block. *sanda fufeer* flat dolly block.
سند *sanad*[2] /n/ **1** /pl *ʕasaniid*/ *[leg]* **1a** item of evidence. **1b** basis of a legal argument. **1c** legal document. **2** /pl *-aat*/ government savings bond (of fixed value and with regular dividends). **3** /no pl/ support, help. ‖*ya sanad-i* epithet a woman gives her husband when mourning him.
سنادة *sinaada* /n pl *-aat*/ support, supporting strut.
سنّادة *sannaada* = *sanda*.
سنيد *sanniid* /n pl *sanniida*/ accompanist (to a dancer or a singer).
مسند *masnad* /n pl *masaanid*/ any of various objects functioning as a support. *masnad saabit [arch]* fixed bearing. *masnad raas* head rest. *masnad kursi* chair back. *masaanid kanaba* back cushions of a traditional sofa. *masnad sarg* cantle of a saddle.
اتسند *ʕitsanad* or *ʕissanad* /vi/ to lean. *duxt*[i] *wi-ssanadit*[a] *ɛala l-ḥeeṭa* I got dizzy and leaned against the wall. *taɛaali ssindi ɛala kitf-i* come, lean on my shoulder. - ava *mitsinid*.
انسند *ʕinsanad* = *ʕitsanad*. - ava *minsinid*.
سنّد *sannid* /vt/ to support, give support to. - vn *tasniid*; ava *misannid*.
اتسنّد *ʕitsannid* or *ʕissannid* /vi/ to support oneself, lean. *maafi yitsannid ɛal-ḥeṭaan* he is walking along holding onto the walls. - ava *mitsannid*.
مستند *mustanad* /n pl *-aat*/ **1** document. **2** documented proof.
مستندى *mustanadi* /adj/ pertaining to records. *daftar mustanadi* record book of documents.

س ن د [2]
السند *ʕis-sind* /prop n/ Sind (province in modern Pakistan). ‖*laffeet is-sind*[i] *wil-hind* ≈ I went and looked everywhere.

س ن د [3] see س ن د ا ن : *sindaan*

س ن د ا ل
سندال *sindaal* /n pl *sanadiil*/ anvil. - also *sindaan*.

س ن د ا ن
سندان *sindaan* /n pl *sanadiin*/ anvil. - also *sindaal*.

س ن د ر
سندرة *sandara* /n pl *sanaadir*/ storage loft.

س ن د س
سندس *sundus* /n/ silk brocade.

س ن د ق
صندوق *sanduuq, sunduuq* /n pl *sanadiiq*/ **1** box, container. *sanduuq busṭa* mail-box. ‖*sanduuq gamɛ [print]* composing frame. *sanduuq id-dunya* a type of peep-show. **2** *[gym]* vaulting box, box horse. **3** fund, kitty.

س ن د ل see س ن د ا ل : *sindaal*

س ن د ن see س ن د ا ن : *sindaan*

– س ن د و
سندوتش *sandawitʃ* <Engl> /n pl *-aat*/ sandwich.

س ن د ى ك
سنديك *sandiik* <Fr *syndic*> /n pl *sanaadik*/ creditor's representative appointed by the court (in bankruptcy cases).

– س ن دِ ى
سنديان *sindiyaan* <P *sindiyân*> /coll n/ holm oak(s).
سنديانة *sindiyaana* /unit n, pl *-aat*/ a holm oak.

– س ن ر ى
سيناريست *sinarist* <Fr> /n pl *-aat*/ scenarist.

س ن س
سنس *sins* <prob It *senza*> /adv/ *[joc]* **1** without paying. *daxal is-siima sins* he entered the cinema without paying. **2** gratis.

– س ن س ف
سنسفيل *sansafiil* /n/: *yilɛan sansafiil-ak [abus]* ≈ curse your whole family tree! - also *salsafiil*.

س ن س ن
سنسن *sinsin* /n/ **1** minute liquorice beads (used as a breath freshener). **2** nickname for Hasan and Muhsin.

س ن ط
سنط *sanṭ* /coll n/ **1** sant tree (Acacia nilotica). **2** ribs (of a boat's hull).
سنطة *sanṭa* <Copt> /unit n, pl *-aat*/ **1** a sant tree. **2** a rib (of a boat's hull). **3** wart.
سنطاية *sanṭaaya* /unit n, pl *-aat*/ **1** a sant tree. **2** wart.

س ن ط ر [1]
سنطر *sanṭar*[1] (also *santar, ṣanṭar*) <Engl> /vt/ *[soccer]* to centre (the ball) for kick-off. - vn *sanṭara*; ava *misanṭar*.
سنطر *sinṭar* (also *sintar, ṣinṭar*) /n/ *[soccer]* **1** centre, centre spot. **2** /pl *sanaatir*/ centre half.
اتسنطر *ʃitsanṭar*[1] or *ʃissanṭar*[1] /vi/ passive of *sanṭar*[1]. - iva *mitsanṭar*.

س ن ط ر [2]
سنطر *sanṭar*[2] /vi/ to collapse heavily. *sakaɛt-u buks*[1] *wiqiɛ misanṭar* I punched him and he went down like a sack of cement. - vn *sanṭara*; ava *misanṭar*.
اتسنطر *ʃitsanṭar*[2] or *ʃissanṭar*[2] = *sanṭar*[2]. - ava *mitsanṭar*.

س ن ف و ر
سيمافور *sanafoor* <Engl> /n pl *-aat*/ **1** semaphore, (railway) signal. **2** epithet for a tall person.

س ن ك ح
سنكح *sankaḥ* /vi/ to loaf about, drift about. - vn *sankaḥa*; ava *misankaḥ*.
سنكوح *sankuuḥ* /adj pl *sanakiiḥ*/ good-for-nothing. *mara sankuuḥa* tramp, trollop.
اتسنكح *ʃitsankaḥ* or *ʃissankaḥ* = *sankaḥ*. - ava *mitsankaḥ*.

س ن ك ر [1]
سنكر *sankar* /vt/ to lock. - vn *sankara*; ava/pva *misankar*.
اتسنكر *ʃitsankar* or *ʃissankar* /vi/ to be locked. - iva *mitsankar*.

س ن ك ر [2] see س م ك ر : *sankar, sankari*

– س ن ك س
سنكسار *siniksaar* <Gr> /n/ *[Chr]* synaxarion.

س ن ك ى
سونكى *sunki* <T *süngü*> /n pl *-yaat, sanaaki*/ bayonet.

س ن م
سنام *sanam* /n pl *-aat, sunúma, sinúma*/ camel hump.

سنمة *sanama = sanam.*
سنماية *sanamaaya = sanama.*
سنام *sanaam = sanam.*

س ن م ا
سينما *sinima, sinama* <Fr> /n pl *-yaat, -haat*/ **1** cinema, movie-house. **2** *ʕis-sinima* the cinema, the movies, the film-making industry. - also *siima.*
سينمائى *sinimaaʕi* /adj/ pertaining to cinema, cinematographical.

س ن م ك ك
سنمكّة *sanamikka* /coll n/ senna, senna pod(s), senna leaflet(s). - also *salamikka.*

س ن ن [1]
سنّ *sann[1] (i)* /vt/ to hone, sharpen. *mumkin tisinn is-sikkiina* would you sharpen the knife? ‖*sann[i] snaan-(u)* to get ready for action. - *masnuun ʕal-ʕaaxir* ≈ on-the-ball. - vn *sann, sananaan*; ava *saanin*; pva *masnuun.*
سنّة *sanna* /inst n, pl *-aat*/ a sharpening.
سنّ *sinn[1]* /n pl *sinaan, ʕasnaan, sinuun*/ **1** tooth, tooth-like projection. *furʃit sinaan* tooth-brush. *sinaan il-laban* milk teeth. *duktoor ʕasnaan* dentist. *sinaan il-munʃaar* the teeth of the saw. *ʕil-ʕeen bil-ʕeen wis-sinn bis-sinn [prov]* an eye for an eye and a tooth for a tooth. ‖*sinn il-fiil* elephant tusk. - *xad deel-u fi-snaan-u w-ṭaar* he took to his heels. **2** (sharp) point, tip, nib. *sinn[i] ʔalam* point of a pencil, nib of a pen. *sinn[i] gazma* toe of a shoe. ‖*sinn[i] naml id-dibbaana* bead of the rifle sight. - *ʕala sinn[i] w-rumḥ* ≈ known to one and all, as in *ʕana zakiyya bint il-ḥagg[a] ʕali l-fakahaani ʕala sinn[i] w-rumḥ* I'm Zakiyya, the daughter of Hagg Ali, the fruit-seller, known to one and all. **3** sharp edge. *sinn is-sikkiina* cutting edge of the blade. ‖*sinn il-ʔalawooz* screw-thread. **4** *[butcher]* front rib chop. **5** a point in tent appliqué designs (see Pl.H, 3).
سنّة *sinna* /n pl *-aat*/ **1** tooth. ‖*ʕabu sinna* nickname for a man with a gold tooth. **2** a little bit. *sinna min gooz it-ṭiib* a pinch of nutmeg. *ʕimʃi sinna l-quddaam* move forward just a bit. *sinna sinna* bit by bit. ‖*sinnit ʕafyuun* bit of opium for sucking.
سنّان *sannaan* /n pl *sannaana, sannaniin*/ one who sharpens blades, knife-grinder.
مسنّ *misann* /n/ whetstone, grindstone, sharpening iron. ‖ *ʕalḥas misann-i w-ʕabaat mihanni [prov]* ≈ I'll be poor but happy.
اتسنّ *ʕitsann[1]* or *ʕissann[2]* /vi/ to be honed, be sharpened. - iva *mitsann.*

سنّن *sannin[1]* **1** /vi/ to teethe. **2** /vt/ to make teeth or serrations in, indent. - vn *tasniin*; ava *misannin.*
مسنّن *misannin* /adj/ toothed, serrated.
اتسنّن *ʕitsannin[1]* or *ʕissannin[1]* /vi/ passive of *sannin* 2. - iva *mitsannin.*

س ن ن [2] see also س ن
سنّ *sinn[2]* /n pl *ʕasnaan*/ age. *sinn ir-ruʃd* legal age. *sinn-u kaam* how old is he? *ʕana ya doob sinn-i sitta w-ʕiʃriin sana* I'm barely twenty-six years old. *kibiir fis-sinn* elderly. *ṭaaʕin fis-sinn* advanced in years. *sinn-u ṣugayyar* he's a young man.
أسنّ *ʔasann* /el/ more/most advanced in years.
سنّن *sannin[2]* /vt/ to estimate the age of. - vn *tasniin*; ava/pva *misannin.*
اتسنّن *ʕitsannin[2]* or *ʕissannin[2]* /vi/ passive of *sannin[2]*. - iva *mitsannin.*
مسنّ *musinn* /adj */ old, aged, advanced in years.

س ن ن [3]
سنّ *sann[2] (i)* /vt/ to launch, initiate (practices, laws etc.). *ʕinta lli sanneet sunna mhabbiba fiʃ-ʃirka* you're the one who started an outrageous practice in the company. - vn *sann*; ava *saanin*; pva *masnuun.*
سنّة *sunna* /n pl *sunan*/ **1** custom or usage sanctioned by tradition. ‖*ʕala sunnit illaah (wi-rasuul-u) [Isl]* legally, as in *ʕiggawwizna ʕala sunnit illaah* we were legally married. **2** *ʕis-sunna [Isl]* the Sunna of the Prophet Muhammad. *ʕahl is-sunna* Sunni Muslims.
سنّى *sunni* /adj */ **1** Sunni, pertaining to the Sunna of the Prophet. **2** bearded. *raagil sunni* a man with a beard. — /n * and pl *-yya*/ **3** a Sunni, Sunnite. ‖*ʕaamil sunni* he pretends to be a pious man.
اتسنّ *ʕitsann[2]* or *ʕissann[2]* /vi/ to be launched, be initiated. - iva *mitsann.*
استنّ *ʕistann* /vt/ to launch, initiate. - ava *mistann.*

س ن ن [4]
سنّ *sinn[3]* /n/ bran. *ʕeef is-sinn* bran bread (prescribed for diabetics).

س ن ن ا ر see ص ن ن ا ر : *sinnaara*

س ن ن و
سنّو *sinnu* <Copt> /n/ style of serving in the game of *xara* (q.v.).

س ن و [1] see also س ن
سنوى *sanawi[2]* /adj */ annual. *taqariir sanawiyya* annual reports.

سنويّة *sanawiyya* /n pl *-aat*/ anniversary.

س ن و [2] see ت ن ى [2] : *sanawi*[1], *ʕis-sanawiyya*

س ن ى [1] see ت ن ى [1] : *ʔasnaaʔ, ʔasna, ʕistasna, ʕistisnaaʔ, ʕistisnaaʕi*

س ن ى [2] see ت ن ى [2] : *saaniyan, sanya, sunaaʕi*

س ن ى [3] see س ن : *misaniyya*

س ن ى و ر
سنيورة *sanyuura: bint*[i] *(zayy is-) sanyuura [rur]* pretty young girl.

(س ه)
ثاء *sih*[1] /fem n, pl *-aat*/ fourth letter of the Arabic alphabet. - also *saaʔ*.
سيه *sih*[2] <P *sih*> /n pl *-aat*/ three (in dice etc).

س ه ت ن
سهتنة *sahtana* /vn/ shiftiness, slipperiness.
مسهتن *misahtin* /adj */ shifty, slippery.
اتسهتن *ʕitsahtin* or *ʕissahtin* /vi/ to pretend to be meek. - ava *mitsahtin*.

س ه د
سهد *suhd* /n/ sleeplessness, insomnia (usually of the lovelorn).
سهاد *suhaad* = *suhd*.

س ه ر
سهر *sihir (a)* /vi/ to stay up late. *sihirna nismaɛ ḥaflit is-sitt* we stayed up late to hear Umm Kalthum's concert. *dimaaɣ-i ḥa-ʔitfiliq min kutr is-sahar* my head is splitting from too much staying up late. - vn *sahar*; ava *sahraan, saahir*.
سهرة *sahra* /n pl *-aat*/ **1** evening, soirée. *libs is-sahra* or *badlit is-sahra* formal evening-dress. *ḥittit diin sahra* a great evening. **2** (late) evening event. *ɛandi sahra fil-beet l-lelaa-di* I'm having a few guests over tonight.
ساهر *saahir* **1** /ava */ wakeful, awake, staying up (at night). **2** /adj/ taking place in the evening. *ḥafl*[i] *saahir* or *ḥafla saahira*↑ (1) evening show, soirée. (2) evening party.
سهّارى *sahhaari* /adv/ through the night, late into the night. *bi-yiʃtaɣalu sahhaari* they work through the night. - /adjectivally/ *lamba sahhaari* (1) small oil-lamp. (2) night-light.
سهّاريّة *sahhariyya* /n pl *-aat*/ **1** small oil-lamp left burning in order to save matches. **2** night-light.
سهّير *sahhiir* /n pl *sahhiira*/ **1** a night-owl, night-hawk. ‖*sahhiir il-layaali* one who is love-stricken. **2** Koranic reader employed throughout the month of Ramadan to recite the Koran at night in a private house.
سهّر *sahhar* /vt/ **1** to keep (s.o.) up late. **2** to employ (a Koranic reader) to recite the Koran throughout Ramadan in one's house. - vn *tashiir*; ava/pva *misahhar*.
اتسهّر *ʕitsahhar* or *ʕissahhar* /vi/ to be kept up late. - iva *mitsahhar*.

س ه ر ج
سهرج *sahrag* /vi/ to blaze (of fire). - vn *sahraga, tisahriig*; ava *misahrag*.

س ه ل [1]
سهل *sihil (a)* /vi/ to become easy. - vn *sihuula, suhuula*.
سهل *sahal (i)* /vi/ to contract diarrhoea.
سهولة *suhuula* /n/ ease, facility. *bi-suhuula* easily.
سهل *sahl* **1** /adj */ easy, convenient. *sahl*[i] *zayy*[i] *furb il-mayya* ≈ as easy as pie. **2** /n pl *suhuul*/ **2a** plain, flat tract of land. **2b** field, meadow.
¶ *sahlan: ʕahlan wa-sahlan* see *ʕahlan*.
أسهل *ʔashal* /el/ easier/easiest.
إسهال *ʕishaal* /n/ diarrhoea. ‖ *ʕil-ʕishaal il-ʕabyaḍ* coccidiosis (fowl disease).
ساهل *saahil*↓ /adj/ easy, convenient.
اتسهل *ʕitsahal* or *ʕissahal* /vi/ to be afflicted with diarrhoea. - iva *mitsihil*.
انسهل *ʕinsahal* = *ʕitsahal*. - iva *minsihil*.
سهّل *sahhil* /vt/ to make easy, facilitate. *ḥ-aḥaawil ʔasahhil muhimmit-ak* I will try to facilitate your task. ‖*rabb-ii-na ysahhil* may our Lord make (things) easy! (said when faced with a problem). - *(ʔallaah) yisahhil-lak* may God make (things) easy for you! - vn *tashiil*; ava/pva *misahhil*.
تسهيل *tashiil* /n pl *-aat, tasahiil*/ facility, facilitation. *fii tashilaat iʕtimaniyya bin-nisba lit-tuggaar* there are credit facilities for merchants. ‖*ḥasab it-tasahiil* depending on circumstances, as in *ḥ-amaʃʃi ḥaal-i maɛaa bi-sgaara bi-fingaal ɛahwa ḥasab it-tasahiil yaɛni* I'll soften him up with a cigarette or a cup of coffee, as appropriate.
مسهّل *musahhil* /n/ **1** Facilitator (epithet of God). *ya musahhil ya rabb* ≈ make things easy, Lord (said when faced with a problem). **2** /pl *-aat*/ laxative.
اتسهّل *ʕitsahhil* or *ʕissahhil* /vi/ passive of *sahhil*. ‖ *ʕitsahhil li-ḥaal sabiil-ak* ≈ push off! - iva *mitsahhil*.
اتساهل *ʕitsaahil* or *ʕissaahil* /vi/ **1** to behave with lenience, indulgence or tolerance. **2** to behave with negligence or carelessness. - vn *tasaahul*; ava *mitsaahil, mutasaahil*↑.

استسهل ʔistashil **1** /vt/ to consider easy, find easy. *xad if-fuṷla lli b-yistashil-ha w-saab is-ṣaɛba* he took the work he finds easy and left what was difficult. **2** to select for easiness. *ʔistashil su ʔaal mil-itneen wi-gaawib ɛalee* pick the easier of the two questions and answer it. - vn *ʔistishaal*; ava/pva *mistashil*.

س ه ل ²
السهيل ʔis-suheel /prop n/ *[astron]* Canopus. ‖ *warra(a) s-suheel yiṭlaɛ mineen* to give (s.o.) a hard time.

س ه ل ي –
سهليّة *sihliyya* /coll n/ small salted grey mullet (Mugil seheli). - also *siheeli*.
سهليّاية *sihliyyaaya* /pl *-aat*/ unit noun of *sihliyya*.

س ه م ¹
سهم *sahm*¹ /n/ **1** /pl *sihaam*/ arrow. — /pl *ʔishum, ʔushum, ʔashum, suhúma*↓/ **2** share, stock certificate. **3** land measure equal to 7.293 square metres. **4** drive shaft of a water-wheel (see Pl.E, 10).
ساهم *saahim* /vi/ to share, participate (with one's resources). *ḥa-tsaahim bi-kaam fil-mafruuɛ il-xayri da* how much will you contribute to this charity project? ‖ *ʃirka msahma* joint-stock company. - vn *musahma*; ava *misaahim*.
مساهم *musaahim* /n */ shareholder, stockholder.
اتساهم ʔitsaahim or ʔissaahim /vi/ **1** (impersonal) passive of *saahim*. *di mafariiɛ ḥukumiyya ma-b-yitsahim-fi fiiha* these are government projects one can't participate in. **2** to share or participate (mutually). - ava/iva *mitsaahim*.

س ه م ²
سهم *sahhim* /vi/ to look concerned or preoccupied. - vn *tashiim*; ava *misahhim*.
تسهيمة *tashiima* /inst n, pl *-aat*/ concerned or preoccupied expression.

س ه م ³
سهم *sahm*² /n/ *[mus]* name given to the note G on the first space above the staff.

س ه م د
سهمد *sahmid* /vt/ **1** to level, even. *ʔimbaariḥ ibtadu ysahmidu f-faariɛ quddaam bet-na* yesterday they began to level the street in front of our house. **2** to settle, clear up. *xallii-hum yisahmidu l-mawḍuuɛ da qabl*ⁱ *ma yitqilib li-xnaaqa ḥamya* have them settle this matter before it changes into a serious dispute. - vn *sahmada*; ava/pva *misahmid*.

اتسهمد ʔitsahmid or ʔissahmid /vi/ **1** to be levelled. **2** to be settled. - vn *tisahmiid*; iva *mitsahmid*.

س ه و see س ه ى : *sahw, sahwa*

س ه ى
سهى *sihi (a)* /vi/ to become heedless or inattentive. *ʔis-sawwaaq sihi fwayya w-ḥaṣal ḥadsa* the driver was distracted briefly and there was an accident. *gooz-i sihi ɛala l-ʔakl*ⁱ *w-faaṭ* my husband forgot about the food and it burned. *sihiit ɛan ṣalaat iṣ-ṣubḥ* I forgot to perform the early morning prayer. *sihyu fiṣ-ṣala* they overlooked part of the prayer ritual. ‖ *raaḥ ɛalayya sahw* I had a lapse of memory. - vn *sahayaan, sahw*; ava *sahyaan, saahi*; pva *mashi*.
¶ *suhi ɛala* to slip the mind of, as in *kunt*ⁱ *mafxuula waqt il-maɛaad suhi ɛalayya w-ma-ruḥt*ⁱ*-ʃ* I was busy at the time of the appointment, it slipped my mind, and so I didn't go.
سهوة *sahwa* /inst n/ a lapse of memory. *raaḥit ɛalayya sahwa* I had a lapse of memory. ‖ *ɛala sahwa* by surprise, as in *xad-ni* (or *gaa-li*) *ɛala sahwa* he took me by surprise, he caught me unawares.
سهيان *sahyaan* /adj */ forgetful, inattentive, absent-minded.
ساهى *saahi* **1** /adj */ = *sahyaan*. **2** /adj pl *sawaahi*/ deceptively innocent-looking, deep (of persons). *taḥt is-sawaahi dawaahi [prov]* ≈ still waters run deep.
أسهى ʔasha /el/ **1** more/most forgetful, absent-minded etc. **2** more/most innocent-looking.
سهّى *sahha* /vt/ **1** to distract, make inattentive. *qaɛad yisahhii-ni l-ḥadd*ⁱ *ma l-qaṭr*ⁱ *faat* he kept me distracted until I missed the train. **2** to take advantage of the inattention of. *sahhaa-ni w-ḥaṭṭ*ⁱ *f-geeb-i l-maḥfaẓa* he took advantage of my being distracted to put the wallet in my pocket. - vn *tashiyya*; ava *misahhi*.
اتسهّى ʔitsahha or ʔissahha /vi/ passive of *sahha*. - iva *mitsahhi*.
استسهى ʔistasha = *sahha* 2. - ava *mistashi*.

س ه ى ل
سهيلى *siheeli* /coll n/ small salted grey mullet (Mugil seheli). - also *sihliyya*.

س و ا ر ى
سوارى *sawaari* <P *suwârî*> /pl n/ *[mil]* cavalry. ‖ *ɛamuud is-sawaari* Pompey's Pillar (in Alexandria).

س و ا ر س
سوارس *sawaaris* /n/ *[obsol]* horse-drawn bus.

س و ء

ساء *saaʕ*[2] *(u)* /vi/ to deteriorate, go bad. *ʕaḥwaal-i saaʕit* my situation worsened. - vn *sawaʕaan, suuʕ, saww*.

ساء *saaʕ*[3] *(i)* **1** /vt/ to wrong, act wrongly with respect to. *siʕnaa-kum fi-ʕeeh* how have we wronged you? ‖ *ʕallaah la ysiʕ-kum* may God not harm you! (said to a beggar when refusing alms). **2** /vi/ to be harmful. *da bi-ysiiʕ li-hayʕit il-bariid* it is deleterious to the Post Office.

سوء *suuʕ* /n/ badness, bad state. ‖ *suuʕ il-ḥaẓẓ* bad luck. - *suuʕ tafaahum* misunderstanding. - *ɣaali w-suuʕ keel* expensive and underweight.

سوّ *saww* /n/ badness. ‖ *ya saww*[i] *baxt-i* oh, the bad luck I have! - *naas saww* bad people. - *ʕuṣbur ɛala gaar is-saww - la-yirḥal la-tgii-lu dahya [prov]* bide your time with an evil neighbour - either he will move away or misfortune will befall him.

سوّة *síwwa* /n pl *-aat, siwaw*/ pudendum.

سيّء *sayyiʕ* /adj */ bad. *sayyiʕ il-ʕaxlaaq* bad-mannered.

سيّئة *sayyiʕa* /n pl *-aat*/ sin, misdeed. ‖ *raaḥ ʕakaffar sayyiʕaat-u* I'll give him a hard time.

أسوأ *ʕaswaʕ* /el/ worse/worst. *da ʕeeh da ya ʕaswaʕ ma xalaq rabb-i-na* what does this mean, you worst of all God's creation!

مساوى *masaawi, masaawiʕ* /pl n/ **1** evil deeds. **2** shortcomings.

اتساء *ʕitsaaʕ* or *ʕissaaʕ* /vi/ passive of *saaʕ*[2]. *ʕitsaaʕ* or *ʕitsaaʕ ʕilee* he was wronged. - iva *mitsaaʕ*.

انساء *ʕinsaaʕ* = *ʕitsaaʕ*. - iva *minsaaʕ*.

سوّأ *sawwaʕ* /vt/ to impair, harm. *dool sawwaʕu sumɛit-na f-kull" ḥitta* they've hurt our good name everywhere. - vn *taswiiʕ*; ava/pva *misawwaʕ*.

اتسوّأ *ʕitsawwaʕ* or *ʕissawwaʕ* /vi/ to be impaired, be harmed. - iva *mitsawwaʕ*.

أساء *ʕasaaʕ*[1] /vi/ to do wrong. *ɛumr-i ma kunt*[i] *musiiʕ fi-ḥaqq-ak* I've never done you any wrong. *ʕana ʕasaʕt-ak fi-ḥaaga* have I offended you in any way? - vn *ʕisaaʕa*[1], *ʕasaaʕa*; ava *musiiʕ*[1].

س و ب

ثواب *sawaab* /n/ merit, reward accruing from pious deeds. *bi-yiqru l-xatma wi-yiwhibuu-lu sawaab-ha* they read the Koran through and donate the merit of it to him. ‖ *ʕiksab fiyya sawaab* do me a good turn (and it will earn you a reward in heaven).

مثابة *masaaba: bi-masaabit* on a par with, tantamount to. *ʕit-taharrub miq-qariiba b-masaabit sirqa* tax evasion is just like stealing.

س و ب ر

سوبر *soobar, suubar* <Engl> /adj invar/ super. *sagaayir suubar* king-size cigarettes. *banziin suubar* high-grade petrol.

س و ت ر

سوتر *sootar* /prop n/ name of a quarter in Alexandria.

س و ت ش

سويتش *siwitʃ* <Engl> /n pl *-aat*/ **1** switch. **2** switchboard. **3** switchboard operator.

س و ج

سوجة *sooga* /n/ hashish.

س و ج ر

سوجر *soogar* <perh It *assicurare*> /vt/ **1** to register (mail). *ɣard*[i] *msoogar* registered parcel. **2** to guarantee. *fuxl*[i] *msoogar* guaranteed work. **3** to lock up well. *ɋifl*[i] *msoogar* (1) a type of strong lock. (2) blockhead, numskull. - vn *misogra*; ava/pva *misoogar, musoogar*. اتسوجر *ʕitsoogar* or *ʕissoogar* /vi/ passive of *soogar*. - iva *mitsoogar*.

س و ح[1] see also س ى ح

ساح *saaḥ*[1] *(u)* /vi/ to tour, travel. - vn *siyaaḥa*; ava *saayiḥ*.

سياحة *siyaaḥa* /n/ tourism. *waziir is-siyaaḥa* Minister for Tourism.

سياحى *siyaaḥi* /adj/ tourist(ic).

سايح *saayiḥ* /n pl *suwwaaḥ, suyyaaḥ*/ tourist.

سوّاح *sawwaaḥ* /n */ itinerant, wanderer.

سوّح *sawwaḥ* /vt/ **1a** to cast, hurl, fling (over a long distance). *sawwaḥt iṭ-ṭuuba min iʃ-ʃibbaak* I flung the stone out of the window. *sawwaḥ il-fikra di min dimaar-ak* throw this idea out of your head. **1b** (also *sayyaḥ*) to spill out (over a large area). *bi-nubdur il-ɣalla w-nsawwaḥ ɛaleeha l-mayya* we sow the grain and then flood it with water. **2** to put off, postpone. *ma-tsawwaḥ-ʃ il-mawḍuuɛ* don't go on delaying the matter. **3** to ruin, make a mess of. *sawwaḥ id-dinya* he caused a lot of trouble. *ḥ-asawwaḥ-ak* I'll destroy you! — /vi/ **4** to wander aimlessly, drift. *markib misawwaḥa* a drifting boat. - vn *taswiiḥ*; ava/pva *misawwaḥ*.

اتسوّح *ʕitsawwaḥ* or *ʕissawwaḥ* /vi/ passive of *sawwaḥ*. - iva *mitsawwaḥ*.

س و ح[2]

إسوح *ʕiswiḥ* /adj, fem *sooḥa*/ black (euphemistic for *ʕiswid* 2a). - also *ʕiswix*.

س و خ [1]

ساخ *saax (u)* /vi/ **1** to sink. *rigl-i saaxit fir-raml* my foot sank into the sand. **2** to faint. *qumt[i] min ʕak-kursi w-ʔana daayix wi-rooḥ-i sayxa* I got up from the chair dizzy and feeling faint. - vn *sawaxaan*; ava *saayix*.

س و خ [2]

إسوخ *ʔiswix* /adj, fem *sooxa*/ black (euphemistic for *ʔiswid* 2a). - also *ʔiswiḥ*.

س و د [1]

ساد *saad (u)* /vi/ to rule, become dominant. *(ʕumr) il-ḥasuud ma ysuud [prov]* the envious never rule. - vn *siyaada*; ava *saayid*.

سيادة *siyaada* /n/ **1** power, authority. *da ṣaaḥib sulṭa w-siyaada* he's the all-powerful boss. **2** sovereignty. **3** *siyaadit* polite or formal title of, and form of address or reference to, a man or woman ≈ sir, madam. *siyaadit id-duktoor* the Doctor. *miʃ ism[i] siyadt-ik magda* isn't your name Magda, ma'am?

سيد *siid* /n/ **1** master. *siid il-beet* the master of the house. *siid-ak wi-taag raas-ak* ≈ I'm your lord and master, I'm better than you from every point of view. *ʔin kaan lak ʕanď il-kalb[a] ḥaaga ʕul-lu ya siid-i [prov]* if you need something from a dog call him master. **2** respectful form of address or reference to a grandfather. **3** *siid-i* familiar form of address to any man. *xud ya siid-i* take this, my friend. **4** *siid-i* and *sid-na* title accorded to any venerated Muslim religious figure. **5** /in constr, w masc referent/ the best of, the finest. *ʔana siid min yiḍrab il-ʕuud* I'm the best lute-player around. *siid il-maʔkulaat* the finest food. — /pl *ʔasyaad*/ **6** demon, spirit.

سيّد *sayyid* /n pl *saada*/ **1** title of, and polite form of address and reference to, a man. *ʔana ṣaddart if-fiik raqam kaza lis-sayyid fulaan* I issued cheque number such-and-such to Mister So-and-so. *ya saada nahar-kum saʕiid* gentlemen, good morning! **2** lord. *sayyid-na* title accorded to a venerated religious figure (e.g., a sheikh, a prophet or (among Christians) a bishop, a patriarch). *ʔis-sayyid (il-masiiḥ)* the Lord Christ. — (also *ʔis-sayyid*) /prop n/ **3** male given name. ‖ *sayyid ʕiʃṭa* hippopotamus.

سيّدة *sayyida* /n pl *-aat*/ **1** title of, and form of address or reference to, a married woman. **2** title of a Muslim female saint. ‖ *ʔis-sayyida* (1) Sayyida Zaynab. (2) name of the quarter in which the mosque of Sayyida Zaynab is located. - *ʔis-sayyidaat* the women saints (specifically, the descendants of the Prophet's daughter Fatima) buried in Cairo.

سيّدى *sayyidi* /adj/ pertaining to Christ.

س و د [2]

أسود *ʔiswid* /adj, fem *sooda*, pl *suud*/ **1** black. *quṭṭa sooda* a black cat. *ʔid-dinya baʕit sooda zayy il-leel* it became as black as night. *ʔis-suud* the black races, negroes. ‖ *ʔabu l-ʔiswid [slang]* opium. - *ʕalb-u ʔiswid* he bears grudges and is unkind. **2a** (also euphemistically, *ʔiswix, ʔiswiḥ*) awful, catastrophic. *baxt-i ʔiswid* my luck is awful. *ya nhaar ʔiswid* what a black day! *ya sana sooda* good God! oh dear! ‖ *misik fid-duxxaan maska sooda* he got a hell of an addiction to tobacco. **2b** shameful. *ʕamlit-ak is-sooda* your shameful deed. **3** *(daaʔ) is-sooda* melancholia.

أسود *ʔaswad* /el/ blacker/blackest.

سوداوى *sawdaawi* /adj */ melancholic. *mazaag sawdaawi* a melancholic temperament (one of the four cardinal humours).

سواد *sawaad* /n/ blackness. *ya wel-hum ya sawaad lel-hum* O blackest woe for them! ‖ *tiʕmil kida ʕaʃaan sawaad ʕuyuun-i* ≈ (don't expect me to believe) you're doing that just for my sake!

السودان *ʔis-sudaan* /prop n/ Sudan. See further under س و د ن

سودانى *sudaani* **1** /adj */ Sudanese. ‖ *(fuul) sudaani* peanuts. **2** /n * and pl *-yya*/ a Sudanese.

سوّد *sawwid* /vt/ **1** to blacken. ‖ *sawwidt[i] wiʃʃ-i-na* you've disgraced us. **2** to make a rough copy of, draft. — /vi/ **3** to turn black. - vn *taswiid*; ava *misawwid*.

تسويدة *taswiida* /n pl *-aat*/ draft, rough copy.

اتسوّد *ʔitsawwid* or *ʔissawwid* /vi/ passive of *sawwid*. - iva *mitsawwid*.

اسودّ *ʔiswadd* /vi/ to become black. ‖ *ʔis-samak iswadd* the fish has rotted. - vn *ʔiswidaad[ↄ]*; ava *miswidd*.

مسوّدة *muswadda, miswidda* /n pl *-aat*/ draft, rough copy.

س و د ن see also س و د [2]

سودن *sawdin* /vt/ to Sudanize. - vn *sawdana*; ava/pva *misawdin*.

اتسودن *ʔitsawdin* or *ʔissawdin* /vi/ passive of *sawdin*. - iva *mitsawdin*.

س و ر [1]

ثار *saar[1] (u)* /vi/ **1** to become agitated. *ʔil-baḥr[i] saar* the sea became rough. **2** to blow up in anger. **3** to erupt (of a volcano). **4** to rebel, rise up. *ʔil-waad da mutamarrid saayir ʕala kull[a] ḥaaga* that kid is unsubordinate, rebelling against everything. - vn *ṣawra, sawaraan*; ava *saaʔir[ↄ], saayir*.

ثار *saar² (i)* /vt/ to excite, stimulate. *bi-yiʕzif bi-ṭariiqa tsiir il-ʃaʕṣaab* he plays in a nerve-racking way. *ḥaaga bi-tsiir ihtimaam-i* something which excites my interest. - vn *ʃisaara*; ava *musiir*; pva *musaar*.

ثورة *sawra¹* /n pl *-aat, -aat*/ revolution, rebellion, insurrection.

ثورجى *sawragi* /n pl *-yya*/ **1** rebel, trouble-maker, agitator. **2** hot-tempered person, firebrand.

ثائر *saaʃir* /n pl *suwwaar*/ revolutionary, rebel, insurgent.

مثار *masaar¹↑* /n/ stimulus, spur.

أثار *ʃasaar* /vt/ **1** to excite, stimulate. *riwaaya musiira* a thrilling story. **2** to raise, pose, bring up. *ʃasart il-mawḍuuʕ min siniin* I brought the matter up years ago. -/the literary passive occurs/ *min kaam sana l-muʃkila di ʃusiirat* how many years ago was this problem raised? - vn *ʃisaara*; ava *musiir*; pva *musaar*.

استثار *ʃistasaar↑* /vt/ to excite, stimulate. - vn *ʃistisaara*; ava *mustasiir*; pva *mustasaar*.

س و ر ²

سور *sawar, sawar (i)* /vt/ to numb the hearing of, deafen. *ʃil-mazziika l-ʕalya sawarit-ni* the loud music deafened me. - vn *sawaraan*; ava *saawir*; ava *maswuur*.

سورة *sawra²* /inst n, pl *-aat*/ a deafening of the ears.

اتسور *ʃitsawar, ʃitsawar* or *ʃissawar, ʃissawar* /vi/ passive of *sawar*. - iva *mitsiwir*.

انسور *ʃinsawar* = *ʃitsawar*. - iva *minsiwir*.

س و ر ³

سور *suur* /n pl *ʃaswaar*/ surrounding wall, fence.

سورة *suura* /n pl *suwar*/ sura, chapter of the Koran.

أسورة *ʃaswira* /n pl *ʃasaawir*/ **1** bracelet. **2** arm bracelet, armlet. **3** cuff.

إسويرة *ʃisweera* /n pl *-aat*/ = *ʃaswira*.

سوّر *sawwar* /vt/ to surround with a fence. - vn *taswiir*; ava/pva *misawwar*.

اتسوّر *ʃitsawwar* or *ʃissawwar* /vi/ to be fenced around. - iva *mitsawwar*.

س و ر ⁴

سوريا *surya* /prop n/ Syria.

سورى *suuri* **1** /adj */ Syrian. **2** /n */ a Syrian.

س و ر ⁵ see س و ا ر ى : *sawaari*

س و ر ق

سورق *sooraq* /vi/ to faint. *qaʕadna nnakkit li-ṛaayit ma kunna ḥa-nsooraq mid-diḥk* we sat around telling jokes until we were about to faint with laughter. - vn *misorqa*; ava *misooraq*.

س و س ¹

سوس *suus¹* /coll n/ weevil(s), borer(s).

سوسة *suusa* /unit n pl *-aat*/ a weevil, a borer. ‖ *da raagil suusa* he's a scheming creep.

سوسايّة *susaaya* = *suusa*.

سوّس *sawwis* **1** /vt/ **1a** to cause to decay. *ʃis-sukkar bi-ysawwis is-sinaan* sugar rots the teeth. **1b** to make worm-eaten or weevily. **2** /vi/ **2a** to decay, become decayed. **2b** to be or become worm-eaten or weevily. - vn *taswiis*; ava/pva *misawwis*.

تسويس *taswiis* /n/ **1** dry rot. **2** *[dent]* caries.

اتسوّس *ʃitsawwis* or *ʃissawwis* /vi/ **1** to decay, become decayed. **2** to become worm-eaten or weevily. - ava *mitsawwis*.

تسوّس *tasawwus↑* /n/ **1** dry rot. **2** *[dent]* caries.

س و س ²

سوس *suus²: rubb^i suus* liquorice, sweets, liquorice pastilles. *ʕirq^i suus* liquorice root, liquorice.

س و س ر ا

سويسرا *suwisra* or *siwisra* <It *Svizzera*> /prop n/ Switzerland.

سويسرى *suwisri* or *siwisri* **1** /adj */ Swiss. **2** /n */ a Swiss.

س و س ن

سوسن *sawsan* /coll n/ lily of the valley.

سوسنة *sawsana* /unit n, pl *-aat*/ a lily of the valley.

س و ط

سوط *sooṭ↑* /n pl *siyaaṭ*/ lash, whip.

سوطى *sooṭi: taṭʕiim sooṭi [hort]* splice-grafting.

س و ع see ¹س ا ع : *sawaaʕi*

س و غ

سوّغ *sawwaɣ* /vt/ to justify. *ma-fii-ʃ ḥaaga tsawwaɣ illi ḥaṣal minnak* nothing can justify what you've done. - vn *taswiiɣ*; ava *misawwaɣ, musawwiɣ*.

مسوّغ *musawwiɣ* /n pl *-aat*/ justification. ‖ *musawwiɣaat it-taʕyiin* papers necessary for appointment to a job, job credentials.

استساغ *ʃistasaaɣ↑* /vt/ to find palatable. - vn *ʃistisaaɣa*; ava *mustasiiɣ*; pva *mustasaaɣ*.

س و ف

مسافة *masaafa* /n pl *-aat*/ **1** distance. *sibaaḥit*

il-masafaat iṭ-ṭiwiila long distance swimming. **2** period of time. *baqaa-li masaafa ṭawiila ma-ʃuft-uu-ʃ* it's been a long time since I saw him. *fi-masaafit rubʕ*^{i} *saaʕa* within a quarter of an hour. ‖*ḥ-aṛiib masaafit is-sikka* I'll be straight back. **3** *[mus]* **3a** interval. *laḥn*^{i} *mitkarrar ʕala masafaat muxtalifa* a melody repeated at varying intervals. **3b** interval, distance between the frets of a *ʕuud*. ¶ *masaafit ma* /conj/ while. *masaafit ma tgiib il-ʕeef yikuun il-ʕaʃa gihiz* by the time you've got the bread, dinner will be ready.

سوّف *sawwif* /vt and vi/ to delay, hold up. *min ḥaqq il-muwaẓẓaf ʃinnu ysawwif (f)il-ʃawraaq* the civil servant has the right to delay papers. - vn *taswiif*; ava/pva *misawwif*.

اتسوّف *ʃitsawwif* or *ʃissawwif* /vi/ to be delayed, be held up. - iva *mitsawwif*.

س و ق [1]

ساق *saaq*^{2} *(u)* /vt/ **1** to drive, herd. *bi-tsuuq il-bihiima btaaʕit iṭ-ṭambuuʃa* she drives the beast that turns the water-wheel. **2** to drive, steer. *tiʕraf tisuuq ʕarabiyya* do you know how to drive a car? **3** to get (s.o.) to act as intermediary or intercessor. *suqt*^{a} *ʕala ʃaxuu-ya ʃumm-i [prov]* (I had my mother straighten out things between my brother and me) ≈ in a dispute call for help from someone who cares about the welfare of both parties. ‖*saayiq ʕaleek in-nabi* please, I beg you. **4** to adopt an attitude of, affect. *ʃinta leeh saayiq il-ʕind* why are you being so stubborn? *saaq il-habal ʕala ʃ-ʃayṭana* he played stupid to cover up his mischief. — /vi/ **5** to drive. *suuq ʕala mihl-ak* drive slowly! *ruxṣit siwaaqa* driving licence. **6** to persist, carry on beyond what is called for. *ma-tsuq-ʃ*^{i} *fiiha* really, it's enough now! cut it out! ‖*saaq (fid-)dalaal* to play hard-to-get. - vn *siwaaqa, siyaaqa*; ava *saayiq*.

سياق *siyaaq* /n/ **1** sequence, course. *siyaaq ik-kalaam* the thread of the conversation. **2** level. *ʃig-ganayni yqaṣqaṣ in-nabataat ʕafaan tibqa syaaq waaḥid* the gardener trims the plants to make them even. — /pl *-aat*/ **3** intermediary, go-between.

سوّاق *sawwaaq* /n */ driver. *sawwaaq taks* taxi-driver.

اتساق *ʃitsaaq* or *ʃissaaq* /vi/ passive of *saaq*^{2}. - iva *mitsaaq*.

س و ق [2]

سوق *suuq* /n pl *ʃaswaaq, siwaaq*/ **1** bazaar, market, market-place. *suuq is-samak* the fish market. *tayyiir il-ʕumla f-maṣr*^{i} *kaan lu suuq zayy il-biḍaaʕa* the changing of money in Egypt had its own market just like any commodity. ‖*ʃibn*^{i} *suuq* a born businessman. **2** market (for a commodity), demand. *saʕaat bi-yibqa b-qirf*^{i} *saaʏ wi-saʕaat bi-qirfeen - huwwa w-suuq-u* sometimes it costs one piastre, sometimes two - it all depends on the market.

سوقى *suuqi* /adj invar/ of poor quality. *saaʕa suuqi* cheap-quality watch. *ʃuʏl*^{i} *suuqi* shoddy work.

سوقى *siwaqi* /adj * **and pl** *-yya*/ vulgar, plebeian, common.

سويقة *suweeqa* /n pl *-aat*/ small informal market.

سوّق *sawwaq* /vt/ to market, put on the market. - vn *taswiiq*; ava/pva *misawwaq*.

تسويق *taswiiq* /n/ marketing. *bi-yidris taswiiq* he's studying marketing.

اتسوّق *ʃitsawwaq* or *ʃissawwaq* /vi/ **1** passive of *sawwaq*. **2** to go shopping, go buying. - ava/iva *mitsawwaq*.

س و ك [1]

سواك *siwaak* /n pl *-aat, ʃiswika*/ a small stick with a softened tip used, especially in the villages, as a kind of tooth-brush.

مسواك *miswaak* /n pl *masawiik*/ = *siwaak*.

سوّك *sawwik* /vt/ to clean (the teeth) with a *siwaak*. - vn *taswiik*; ava/pva *misawwik*.

اتسوّك *ʃitsawwik* or *ʃissawwik* /vi/ **1** to be brushed clean with a *siwaak* (of the teeth). **2** to clean one's teeth with a *siwaak*. - ava/pva *mitsawwik*.

س و ك [2]

سوكة *sooka* /n pl *siwak, sokaat*/ sharp edge. *naʕʕamt*^{i} *sookit looḥ il-qizaaz* I rounded off the sharp edge of the pane of glass.

س و ك ب –

سوكبيس *sawikbees* (also *sukubees*) /n/ fine fabric used for making handkerchiefs.

س و م

ساوم *saawim* /vt/ to bargain or haggle with. *ma-fii-ʃ fayda min misawmit it-tuggaar fi-siʕr*^{i} *muḥaddad* there's no point in bargaining with merchants over a fixed price. - vn *misawma*; ava *misaawim*.

اتساوم *ʃitsaawim* or *ʃissaawim* /vi/ to bargain with one another. - ava *mitsaawim*.

س و و see **س و ء**: *saww, siwwa*

س و ى [1]

يسوى *yiswa* /vt, imperf only/ to have (the) worth (of). *da ma-yiswaa-ʃ* this isn't worth (the price). *ma-tiswaa-ʃ*

baṣṣa liiha it's not worth a glance. *ma-yiswaa-ʃ ʔirfeen* it's not worth two piastres. ‖ *ʃilli yiswa wi-lli ma-yiswaa-ʃ* every Tom, Dick and Harry, as in *xalla lli yiswa wi-lli ma-yiswaa-ʃ yibahdil-ni* he let every Tom, Dick and Harry disgrace me.

سوى *siwa* /n/ **1** levelness, evenness. *hiyya wil-ħeeṭa siwa waaħid* it is flush with the wall. **2** cooking. *ma-b-taxud-ʃ[i] siwa ktiir* it doesn't take much cooking. *nuṣṣ[i] siwa* half-cooked. *beeḍ nuṣṣ[i] siwa* soft-boiled eggs. — /prep/ **3**↑ /w suff *siwaa* other than, except. *ma-lhaa-ʃ siwaa-k ya rabb* she has no-one but you, Lord.

سوا *sawa[1]* **1** /adv/ together. *ʃitʕaʃʃu sawa* they had dinner together. *ħa-yigra ʕeeh law miʃiit bil-ħalteen sawa* what will happen if I do both things together? **2** /adj invar/ alike, equal. *huwwa wil-ħumaar sawa* he and the donkey are just the same, he cannot be distinguished from a donkey. ‖ *ʕala ħaddin sawa* (it's) six of one and half a dozen of the other, it makes no difference.

سوا، سواء *sawa[2], sawaaʔ↑, suwaaʔ* /correlative conj/: *sawa ... sawa* (or *ʔaw* or *ya*) whether ... or. *tibʕa ħa-titgawwiz-u sawa ʃtaɣalit sawa ma-ʃtaɣalit-ʃ* she'll marry him whether she gets a job or not.

سيّان *siyyaan* /adj invar/ equal. *kull-u-kum ʕandi siyyaan* in my opinion you are all equal.

سوّى *sawwa* /vt/ **1** to give a straight profile to. *sawwu ṣufuf-kum* even up your lines! *ʔil-ħaddaad bi-ysawwi kaff il-faas* the blacksmith is straightening the edge of the hoe. *sawwa ʃanab-u* he trimmed his moustache. **2** to settle, arrange. *baʕd[i] xamsiin sana sawweena l-masaaʔil il-ʕaskariyya* after fifty years we have settled the military issues. *ħa-ysawwi kull[i] dyuun-ak* he'll settle all your debts. ‖ *sawwa l-hawaayil* he's done terrific things. **3** to cook. *ʕabl[i] ma tiṭħan il-bunn[i] laazim tisawwi l-fiṭiir* before she grinds the coffee she must bake the *fiṭiir*. ‖ *ʔasawwii-k min iḍ-ḍarb* I'll give you what for! I'll fix you! - vn *taswiyya*; ava/pva *misawwi*. ¶ *ʕamal wi-sawwa* intensive form of *ʕamal*, as in *ʔibn-i ʕamal wi-bn-i sawwa* my son did great things, *ʔaʕmil ʔeeh ʔasawwi ʔeeh* what on earth am I to do? *ʕamalit wi-sawwit fiyya* she caused me all manner of harm.

تسوية *taswiya, taswiyya* /n pl *-aat*/ settlement, agreement.

اتسوّى *ʔitsawwa* or *ʔissawwa* /vi/ passive of *sawwa*. - iva *mitsawwi*.

ساوى *saawa* /vt/ **1** to render level or even. *ʔil-infigaar saawa l-ʕimaara bil-ʔarḍ* the explosion levelled the building. *bi-nsaawi l-ʔarḍ[i] ʕabl[i] ma niħrit-ha* we level the land before ploughing it. *ʃaʕr[i] msaawi* neatly trimmed hair. *saawi s-siriir* tidy the bed! *ʔil-loon bitaaʕ-u msaawi kull-u maʕa baʕḍ-u* its colour is even throughout. ‖ *kidb[i] msaawi wala sudq[i] mbaʕzaq [prov]* consistent lying is more credible than garbled truth. **2** to have the worth of. *ʔil-ɣiweeʃa l-maksuura di bi-tsaawi talaata gneeh* this broken bracelet is worth three pounds. *xamsa w-talaata ysaawu tamanya* five and three make eight. - vn *misawiyya*; ava/pva *misaawi*.

مساواة *musawaaħ↑* /n/ equality. *ʔil-musawaaħ fil-furaṣ* equality of opportunity.

اتساوى *ʔitsaawa* or *ʔissaawa* /vi/ **1** passive of *saawa*. **2** to be equal. *ʔagzaaʔ mutasawya* equal parts. *ʔil-faqiir bi-yissaawa maʕa l-ɣani baʕd il-moot* poor and rich are equal after death. - vn *tasaawi*; ava *mitsaawi, mutsaawi*.

استوى *ʔistawa* /vi/ **1a** to become cooked, finish cooking. *ʔil-ʔakl[i] mistiwi* the food is ready to eat. **1b** to ripen, mature. *quuṭa mistiwiyya* (over) ripe tomatoes. *xaʃab mistiwi* seasoned timber. **2** to be fed up, be at the end of one's tether. *ʔistawa min il-maʃy* he's sick and tired of walking. *ʔana staweet* I've had enough! **3** to become even. ‖ *xaṭṭ il-istiwa* the Equator. - vn *ʔistiwa*; ava *mistiwi*.

مستوى *mustawa* /n pl *mustawayaat*/ **1** standard, level. *mudarrisiin ʕala mustawa l-gamʕa* teachers at the university level. *fi-mustawa saṭḥ il-mayya* on a level with the surface of the water, *fooq mustawa in-naẓar* above eye level. **2** class, status. *ʔana miʃ min mustawaa-ha* I'm not of her class.

س و ى [2] see س و ء : *masaawi*

س و ى د

السويد *ʔis-siweed* /prop n/ Sweden.

سويدى *siwiidi* **1** /adj */ Swedish. **2** /n * and pl *siwiid*/ a Swede. **3** /n, no pl/ (Swedish) physical exercises.

س و ى س

السويس *ʔis-suwees* /prop n/ Suez. *qanaat is-suwees* the Suez Canal.

س و ى ف see ب ن ى [2] : *bani sweef*

س ى

سى *si* /w foll name/ **1** informal term of address or reference to a man (among the lower classes or between intimates). **2** respectful form of address (when used by an uneducated man addressing his superior).

س ى ء [1] see س ا ء : *saaʔ[1]*

²س ى ء see س و ء: *saaʔ¹, saaʔ², sayyiʔ, sayyiʔa, musiiʔ*

¹س ى ب

ساب *saab (i)* /vt/ **1** to allow, permit. *ħa-tsib-ha tiftaxal* are you going to let her work? *ma-tsib-nii-f ʕaxlaṭ* don't let me make a mistake. **2a** to leave alone, leave be. *siib il-baab maftuuħ* leave the door open. *siib ir-raagil li-hmuum-u* leave the man to his worries. *sib-ni f-ħaal-i* let me be! *leeh bi-tsiib il-walad yiʕayyaṭ kida* why does she leave the boy crying like that? ‖*saayib daqn-u* he's letting his beard grow. **2b** to leave behind. *ʕana saayib miraat-i fil-balad* I've left my wife in the village. *saabit fanṭit-ha fil-beet* she left her bag at home. ‖*miʃ ħa-nsiib ħaqq-i-na maʕaa* we won't let him get away with it! **2c** to pass over, leave out. *ʕiktib ʕala saṭr¹ w-siib saṭr* write on a line and skip a line. *bi-tnaqqi l-quuṭa n-naffa wi-tsiib il-mistiwiyya* she picks out the firm tomatoes and leaves the soft ones. **3a** to leave, bequeath. *gidd-u sab-lu l-ʕimaara* his grandfather left him the building. **3b** to leave, deposit. *ħ-asib-lak ik-kitaab maʕa l-bawwaab* I'll leave the book with the doorman for you. **3c** to leave as an after-effect. *ʕig-garħ¹ saab ʕalaama* the wound left a scar. **4** to depart from, quit. *sibt ingiltira min sanateen* I left England two years ago. ʕiza *laqeet nafs-i taʕbaan ħ-asiib if-fuxl¹ da* if I find I'm getting tired I'll pack up this job. **5a** to let go of, release. *siib il-ħabl* let go of the rope! ‖*siib ʕiid-ak* (1) open your hand! (2) let go! **5b** to let free, release. *siib il-mayya min il-ħooḍ* let the water out of the sink. *sib-ni ʕalee* let me at him! — /vi/ **6** to go loose, go uncontrolled. *ʕil-ħabl¹ saab* the rope went slack. *mafaṣl-i saabit* my joints went loose, I went limp. *ʕil-bihiima sayba fil-veeṭ* the beast is loose in the field. *ʕil-ħanafiyya sayba* the tap has been left on. ‖*rukab-i saabit* my knees turned to water. - *baṭn-i saabit* my bowels went loose. - *ʕiid-u sayba* he's extravagant. - *manaxiir-u sayba* his nose is runny. - *wisṭ-a-ha saayib* she has a swaying walk. - *ʕuqda sayba* granny knot. - *ʕil-ħikaaya saabit xaaliṣ* the whole affair fell apart. - *saab ʕala rooḥ-u* he soiled himself. - *rooḥ-u saabit* he fainted. - *ʕil-waad saab* the boy ran wild, the boy strayed from the straight and narrow. - *ʕil-maal is-saayib yiʕallim is-sirqa [prov]* ≈ unwatched property encourages theft. - vn *sayabaan*; ava *saayib*.

¶ *saab ʕala* to mount (a female animal, of a male animal), as in *ʕil-ħumaar saab ʕal-ħumaara* the male ass mounted the female. — *siib-ak min* /fem *siib-ik min*, pl *sib-ku min*/ have done with! as in *siib-ak mik-kalaam il-faariʁ da* enough of this nonsense! *siib-ik minnu w-nirgaʕ liiki* forget about him, now let's come back to you.

سايب *saayib* /adj/ for sale unpackaged. *sukkar saayib* sugar sold loose. *laban saayib* unbottled milk.

اتساب *ʕitsaab* or *ʕissaab* /vi/ passive of *saab*. - iva *mitsaab*.

انساب *ʕinsaab* = *itsaab*. - vn *ʕinsiyaab*; iva *minsaab*.

انسياب *ʕinsiyaabʔ* /n/ **1** fluidity. **2** streamlining.

سيّب *sayyib* /vt/ **1** to cause to leave. *sayyibuu-ni l-balad* they made me leave the country. **2** to cause to relinquish. *sayyibt-u l-musaddas* I made him drop the gun. **3** to release. *sayyib il-mayya fiz-zarʕ* let the water onto the crops. *ʕismaʕ min hina w-sayyib min hina* ≈ let it in one ear and out the other. *sayyib-lu s-surʕ ª ʕafaan yigri* loosen the reins so he'll run. ‖ *ʕiʃ-farba sayyibit baṭn-i* the laxative loosened my bowels. - vn *tasyiib*; ava *misayyib*.

اتسيّب *ʕitsayyib* or *ʕissayyib* /vi/ passive of *sayyib*. - iva *mitsayyib*.

تسيّب *tasayyub* /n/ laxity, laisser-faire.

²س ى ب

سيبة *seeba* <perh T *sıpa* from P> /n pl *-aat*/ trestle, tripod. - also *sibya*.

س ى ج

سيجة *siiga* /n/ game resembling noughts and crosses. ‖*ħa-nilʕab siiga ʕala baʕḍ* are we going to beat around the bush with each other?

س ى ح see also ¹س و ح

ساح *saaħ² (i)* /vi/ **1** to flow all over. *ʕil-mayya saaħit ʕal-ʕarḍ* the water flooded the floor. ‖*faʕr¹ saayiħ* loose flowing hair. **2** to tour, travel. *nisiiħ fi-blaad allaah* we tour around everywhere. **3** to melt, become melted. *xalli z-zibda tsiiħ* let the butter melt. *ruṣaaṣ saayiħ* molten lead. ‖*kaanu sayħiin maʕa baʕḍ¹ fid-diħk winnukat* they were in stitches with laughter and jokes. - *bint¹ sayħa* a playful flirtatious girl. - *kull¹ ma b-aʃuf-ha kull¹ ma b-asiiħ fi-gamal-ha* the more I see her the more I'm knocked over by her beauty. - vn *sayaħaan*; ava *saayiħ*.

سيّح *sayyaħ* /vt/ **1a** (also *sawwaħ*) to spill out (over a large area). *sayyaħt il-mayya ʕala l-balaaṭ* I sloshed the water over the tiles. ‖*ħ-asayyaħ damm-ak* I'll beat you bloody! - *balwa msayyaħa* a real calamity. **1b** to fill to overflowing. *sayyaħ il-ħooḍ* fill the sink to the brim! **2a** to melt (down). *sayyaħit diħn¹ liyyit il-xaruuf* she rendered the fat of the sheep's tail. *bi-ysayyaħu s-samn* they clarify the butter. ‖ *ʕil-bint¹ di bi-tsayyaħ-ni xaaliṣ*

this girl really makes me melt with desire. - *ʕil-mazziika msayyaḥaa-ni* the music has me really turned on. **2b** to defrost (a refrigerator). **3** to heat (stale bread in order to soften it). — /vi/ **4** to liquify. *ʕil-maɛguun sayyaḥ* the paste became runny. - vn *tasyiiḥ*; ava *misayyaḥ*.
اتسيّح *ʔitsayyaḥ* or *ʔissayyaḥ* /vi/ passive of *sayyaḥ*. - iva *mitsayyaḥ*.

س ى خ
سيخ *siix* /n pl *ʔasyaax, siyaax*/ **1** skewer. *ʔil-kabaab bi-yinḥaṭṭ[i] fil-ʔasyaax ɛala l-faḥm* the kebab is put on skewers over the charcoal. **2** rod, bar. ‖*siyaax liḥaam* welding electrodes.

س ى د see [1] س و د : *siid, sayyid, sayyida, sayyidi, siyaada*

[1] س ى ر
سار *saar[3] (i)* /vi/ to proceed. *ʔig-ganaaza saarit ʔizzaay* what route did the funeral follow? *xaṭṭ[i] seer* route. ‖*seer yimiin* right turn (traffic). - vn *seer*; ava *saayir*.
سير *seer* /n/ **1** conduct, comportment. *ḥusn is-seer wis-suluuk* good conduct. ‖*ʃahaadit seer wi-suluuk* character reference, testimonial. — /n pl *suyuur*/ **2** (machine) belt, conveyor or drive belt. **3** strap.
سيرة *siira* /n pl *siyar*/ **1** topic, subject. *fuḍḍ-i-na min is-siira di* let's drop the subject. ‖*wi-siirit-...* and the like of ..., as in *ɋuṭuɛ il-ḥaʃiiʃ wil-ʔafyuun wi-sirit-hum* damn hashish, opium and all that! - *kunna f-sirt-ak* we were talking about you. - *gaab (fi-)siirit* (1) to mention, speak of, as in *ma-bi-tgib-ʃ[i] sirt-u fig-gawaab* she doesn't mention him in the letter, *gibna siirit il-ɋuṭṭ[i] ga ynuṭṭ* ≈ speak of the devil! (2) to speak badly of, as in *gaybiin fi-siirit miin* who are you running down? **2** reputation. *sirt-ak wisxa* you have a bad reputation. **3** folk epic, collection of narrative prose and verse about a folk hero. **4** biography, vita. *ʔis-siira (n-nabawiyya)* the biography of the Prophet Muhammad.
سيّارة *sayyaara*↑ /n pl *-aat*/ car, automobile. *qiṭaɛ ɣiyaar sayyaraat* car spares.
مسار *masaar[2]* /n/ **1** course. *masaar il-markib* the ship's course. **2** gait (of a horse).
سيّر *sayyar* /vt/ **1** to move, keep in motion. *ʃuuf waaḥid yisayyar if-fuɣl[i] fi-ɣyaab-i* find someone to look after things in my absence. **2** to help (e.g., a child) relieve himself. *xuḍi l-ɛayyil sayyarii* take the baby to the potty. **3** to streak, cause streaking in. *ʔis-sabɣa l-wiḫʃa tsayyar il-ɋumaaʃ* bad quality dye streaks the cloth. — /vi/ **4** to become streaky. *wiʃʃ-u sayyar mil-ɛaraɋ* his face was streaked with sweat. - vn *tasyiir, tasyiir*; ava/pva *misayyar*.
تسييرة *tasyiira* /n pl *-aat, tasayiir*/ **1** instance noun of *tasyiir*. **2** body elimination. ‖*tasyiirit mayya* urination.
اتسيّر *ʔitsayyar* or *ʔissayyar* /vi/ **1** passive of *sayyar* 2 and 3. **2** to relieve oneself. *ʔil-ɛayyil itsayyar ɛala rooḥ-u* the baby wet himself. - ava/iva *mitsayyar*.
ساير *saayir* /vt/ to humour, go along with. *sayr-u l-ḥadd[i] ma tiɛraf ʔaxrit-u ʔeeh* play along with him until you know what he's getting at. ‖*misaayir ʔumuur-u* he's getting along, he's managing nicely. - vn *misayra*; ava *misaayir*.

[2] س ى ر see [1] ص ى ر : *misiir*

س ى ر ج
سيرج *siirig* /n/ sesame oil.
سيرجة *sirga* /n pl *-aat*/ mill for pressing vegetable oil. *zeet sirga* vegetable (cooking) oil.

س ى ز ل
سيزل *sayzal* <Engl> /n/ sisal (hemp). - also *sizaal*.

س ى س
سياسة *siyaasa* /n/ **1a** policy. **1b** politics. **2** tact. *bi-yɛaamil in-naas bis-siyaasa* he deals with people tactfully. ‖*ʃidd id-durg[i] bis-siyaasa* pull the drawer out gently.
سياسى *siyaasi* /adj */ **1** political. **2** diplomatic. *ʔis-silk is-siyaasi* the diplomatic corps.
¶ *siyasiyyan* /adv/ politically.
سايس *saayis[1]* /n pl *suyyaas, siyyaas*/ **1** stable groom. **2** garage attendant.
سايس *saayis[2]* /vt/ to handle with adroit care, nurse along. *saayis ʔumuur-ak* handle your affairs with tact. *ʔil-ḥuṣaan ɛaawiz misaysa* the horse needs a gentle hand. - vn *misaysa*; ava *misaayis*.
اتسايس *ʔitsaayis* or *ʔissayis* /vi/ passive of *saayis[2]*. - iva *mitsaayis*.

— س ى س ب see س س ب ا ن : *saysabaan*

س ى س ى
سيسى *siisi* **1** /coll n/ ponies. **2** /unit n, pl *sayaasi*/ a pony.

س ى ط
ساط *saaṭ (i)* /vi/ to become weak and watery (of food or drink). *ma-txallii-ʃ il-muluxiyya tsiiṭ* don't let the *muluxiyya* get watery. *ɋahwa sayṭa* weak coffee. - ava *saayiṭ*.

س ي ط ر

سيطر *sayṭar* /vi/ to dominate, become master. ***fikra msayṭara*** dominant idea. ***bi-tḫibb[i] tsayṭar ʕala goz-ha*** she likes to lord it over her husband. - vn ***sayṭara***; ava ***misayṭar***.

اتسيطر *ʔitsayṭar* or *ʔissayṭar* = ***sayṭar***. - ava ***mitsayṭar***.

[1] س ي ع see also و س ع

ساع *saaʕ (a)* /vt/ to hold, accommodate. ***guḥr[i] diib yisaaʕ miit ḫabiib [prov]*** ≈ there is always room for friends. ‖***ʕalb-u ma-ysaʕ-f[i] ḫadd*** he cares for no one. - ***ʔid-dinya ma-hiyyaa-f sayʕaa-na*** the world cannot contain us (in our joy). - vn ***sayaʕaan***; ava ***saayiʕ***.

ساعى *saaʕa*[2] = ***saaʕ***. - ava ***misaaʕi***.

اتساعى *ʔitsaaʕa* or *ʔissaaʕa* /vi/ to be accommodated. ***ʔil-filuus miʃ mitsaʕiyya fil-maḫfaẓa*** the money won't fit into the wallet. - iva ***mitsaaʕi***.

[2] س ي ع see [1] س ا ع : ***saaʕa[1]***

س ي غ see also ص ي غ

ساغ، صاغ *saaɣ*[2] ***(i)*** /vt/ to work (fine metals). - vn ***siyaaɣa***; ava ***saayiɣ***.

صايغ *saayiɣ* /n pl ***saaɣa, suyyaaɣ***/ goldsmith.

صاغة *saaɣa* /n/ goldsmiths' market, goldsmiths' quarter.

مصوغات *masuɣaat*↑, *maṣuɣaat*↑ /pl n/ (metal, especially gold) jewelry.

صيغة *siiɣa* /n/ (metal, especially gold) jewelry.

مصاغ *masaaɣ, maṣaaɣ* /n/ (metal, especially gold) jewelry.

صيّغ *sayyaɣ* /vt/ to acquire jewelry (especially gold) for. - vn ***tasyiiɣ***; ava/pva ***misayyaɣ***.

اتصيّغ *ʔitsayyaɣ* or *ʔissayyaɣ* /vi/ **1** passive of ***sayyaɣ***. **2** to acquire (gold) jewelry. - ava/iva ***mitsayyaɣ***.

س ي ف

سيف *seef* /n pl ***suyuuf***/ **1** sword. ‖***seef il-ʕiyaasa*** ring gauge. - ***seef il-ʔiid*** side of the hand. - ***raas-u w-ʔalf[i] seef*** he is very stubborn, he is adamant, as in ***ʔir-raagil raas-u w-ʔalf[i] seef ma-ybiʕ-haa-f*** the man won't sell it come hell or high water. - ***seef ibn[i] zi yazan*** proto-Muslim South Arabian hero of Egyptian folk literature, famous for his struggles and exploits against pagan negroes and Abyssinians. **2** scythe. **3** type of card game of chance.

سيّف *sayyif* /vt/ to mow with a scythe. - vn ***tasyiif***; ava ***misayyif***.

اتسيّف *ʔitsayyif* or *ʔissayyif* /vt/ to be mowed with a scythe. - iva ***mitsayyif***.

[1] س ي ق

سيّق *sayyaq* /vt/ to scrub (a floor). - vn ***tasyiiq***; ava ***misayyaq***.

اتسيّق *ʔitsayyaq* or *ʔissayyaq* /vi/ to be scrubbed (of a floor). - iva ***mitsayyaq***.

[2] س ي ق see [1] س و ق : ***saayiq, siyaaq***.

س ي ك

سيكة *siika* <P *sih-gâh*> /n/ ***[mus]*** **1** the name given to the note E half flat. **2** mode in Arabic music beginning on E half flat and having B half flat. **3** a *naay* tuned to E half flat.

س ي ك ر ا ن see [1] س ك ر

س ي ل

سال *saal (i)* /vi/ to flow, stream. ***ʔid-dumuuʕ saalit min ʕenee-ha*** the tears flowed from her eyes. - vn ***seel, sayalaan***; ava ***saayil***.

سيل *seel* /n/ flood, flow.

سيلان *sayalaan* /n/ ***[path]*** gonorrhea.

سايل *saayil* **1** /adj/ liquid, runny. ‖***filuus sayla*** liquid money. **2** /n pl ***sawaayil***/ liquid, fluid.

سيولة *siyuula* /n/ liquid state, fluidity.

سيّال *sayyaal* /n/ blaze (mark on a horse's face).

سيّالة *sayyaala* /n pl ***-aat, sayayiil***/ pocket set into the side seam(s) of a galabiya.

سيّل *sayyil* **1** /vt/ to cause to flow or stream. **2** /vi/ to flow, stream. ***ʔil-ʕaraq misayyil min wiff-u*** sweat is pouring off his face. - vn ***tasyiil***; ava/pva ***misayyil***.

اتسيّل *ʔitsayyil* or *ʔissayyil* /vi/ to be made to flow. - iva ***mitsayyil***.

س ي م

سيم *siim* <perh P *sîm*> /n/ code, secret language. ***bitaaʕ it-talat waraqaat raaxar luu siim*** the three-card trick practitioner also has his own secret jargon.

سيمة *siima*[1] assonant intensifier, occurring with ***ʕiima, ʕaamil li-nafs-u ʕiima w-siima*** he gives himself airs. ***laa-lu la ʕiima wala siima*** he doesn't have even the look of worth.

س ي م ا

سينما *siima*[2] /n/ **1** cinema, movie-house. **2** ***ʔis-siima*** the cinema, the movies. **3** /pl ***siyam***↓/ a small box with eye-piece for viewing transparencies. - also ***sinima***.

[1] س ي ن

سين *siin* /fem n, pl ***-aat***/ **1** twelfth letter of the Arabic alphabet. **2** /n, no pl/ abbreviation of ***suʔaal*** (= ques-

tion). *siin ɛala di* a question concerning this. *siin wi-giim* (abbreviation of *suʃaal wi-gawaab*) (1) question and answer. (2) cross-examination.

[2] س ی ن see س و ی : *siyyaan*

س ی ن ا
سيناء *siina* /prop n/ Sinai.

س ی ه see س ه

س ی و ا
سيوا *siiwa* /prop n/ Siwa Oasis and town.
سيوى *siiwi* /adj */ from or pertaining to Siwa Oasis. *balaḥ siiwi* Siwan dates, type of sweet black date.

ش

ش

ش *-ʃ* suffix signalling **1** negative state, when used in conjunction with the prefix *ma-* (q.v. sense 3). **2** a rhetorical negative. *ʕandak-ʃ*^{i} *sgaara* you don't happen to have a cigarette, do you? *tigii-ʃ titʕaʃʃa ʕandina l-leelaa-di* won't you come and dine at our place this evening? for *ɤer-ʃ*, see *ɤeer*; for *tiqul-ʃ*, see *qaal*; for *lolaa-ʃ* and *lomaa-ʃ*, see *loola* and *looma* respectively.

ش ا ب

شاب *ʃaab*^{1}*: ħariir ʃaab* raw silk.

ش ا د ر

شادر *ʃaadir* <P *châdar*> /n pl *ʃawaadir*/ **1** tent. **2** large covered wholesale market, central warehouse (e.g., for fruit or fish).

ش ا ش ^{1}

شاش *ʃaaʃ* /n/ gauze, muslin.

شاشة *ʃaaʃa*^{1} /n pl *-aat*/ **1** /unit n/ a piece of gauze. **2** (film, television, radar) screen. **3** television tube.

ش ا ش ^{2} see ش ش ى : *ʃaaʃa*^{2}

(ش ا ل)

شال *ʃaal*^{1} <P *shâl*> /n pl *ʃilaan*/ **1** shawl. **2** length of muslin wound into a turban (see Pl.F, 14).

شال *ʃaal*^{2} <Copt> /coll n/ Synadontis schall, a Nile fish. - also *ʃilaan*.

ش ا م ^{1}

الشام *ʕiʃ-ʃaam* /prop n/ the Levant, especially Syria and Lebanon.

شامى *ʃaami* **1** /adj/ pertaining to the Levant, especially Syria and Lebanon. ‖ *dura ʃaami* maize (Zea mays). *-ʕeeʃ ʃaami* Arab-style bread made with white flour. *-ʃurb*^{i} *ʃaami* way of smoking hashish in a *gooza* without water. **2** /n pl *ʃawaam*/ a Syrian, a Lebanese. ‖ *ʕitlamm iʃ-ʃaami ʕal-maɤrabi* the Syrian got together with the Moroccan (of a combination of two extremes).

^{2} (ش ا م)

شامة *ʃaama* /n pl *-aat*/ **1** mole, beauty spot. **2** birthmark.

شامّيّة *ʃamiyya* /n pl *ʃawaami*/ rope made of fibre. ‖ *gamʕ iʃ-ʃawaami [naut]* hauling the ship as close to the quay as possible.

ش ا ه

شاه *ʃaah* <P *shâh*> /n/ Shah (of Iran).

ش ا ه ى

شاهى *ʃaahi* <P *shâhî*> /n/ striped material of cotton and silk, particularly used for kaftans. ‖ *ʕiṭr*^{i} *ʃaahi* sweet pea.

(ش ا ى)

شاى *ʃaay* /n/ tea, drink of tea. *ʃaay kuʃari* drink of tea made by pouring boiling water over tea leaves in a glass.

شاية *ʃaaya* /n pl *-aat*/ baby's under-shirt.

(ش ء ش ء)

شأشأ *ʃaʕʃaʕ* <Copt> /vi/ to begin to appear (of dawn or blossoms). - vn *ʃaʕʃaʕa*; ava *miʃaʕʃaʕ*.

شئشاء *ʃiʕʃaaʕ* /n/ small amount (usually of liquid). *bi-ʃiʕʃaaʕ mayya* with a very little water.

ش ء م see ش و م ^{1} : *ʃuʕm, maʃʕuum, ʕitʃaaʕim, taʃaaʕum, mutaʃaaʕim*

ش ء ن
شأن *ʃaʔn* /n pl *ʃuʔuun*/ affair, matter. *ʃuʔuun iṭ-ṭullaab* (department of) student affairs. ‖*lu ʃaʔn* he is a man of standing. -*ṣaaḥib iʃ-ʃaʔn* the party concerned. -*ʔinta ʃaʔn-ak ʔeeh* what business is it of yours?

ش ب ا ر
شبار *ʃabaar* /coll n/ type of Nile perch (Tilapia Zillii).
شبارة *ʃabaara* /unit n, pl -*aat*/ a Nile perch.

ش ب ب [1]
شبّ *ʃabb*[1] *(i)* /vi/ **1** to grow up, grow to maturity. *ʔiz-zarɛa ʃabbit* the crop has matured. *min ʃabb*[a] *ɛala ʃeeʔ ʃaab ɛalee [prov]* ≈ as the twig is bent so will the tree grow. **2a** to rise on tiptoes. *ʃabb*[a] *ɛaʃaan yiṭul-ha* he stood on tiptoes to reach it. **2b** to rear (of an animal). *ʔil-ḥuṣaan ʃabb*[a] *ɛala l-faras* the stallion mounted the mare. - vn *ʃabb, ʃababaan*; ava *ʃaabib*.
شبّ *ʃabb*[2] /n *ʃubúba/ [rur]* ox. ‖*ʃabb il-leel [bot]* marvel-of-Peru, four-o'clock (Mirabilis jalapa).
شابّ *ʃabb*[3], *ʃaabb* /n pl *ʃubbaan*/ youth, young man.
شابّة *ʃabba*[1] /n pl -*aat*/ young woman, young lady.
شبّاني *ʃubbaani* /adj/ pertaining to youth.
شباب *ʃabaab* /n/ **1** youth, youthfulness. *maat fi-ʃabaab-u* he died in his youth. - /adjectivally/ *ʔinta lissa ʃabaab* you're still young. **2** /coll n/ youth(s), young people.
شبوبيّة *ʃububiyya* or *ʃibubiyya* /n/ youth.
شبيبة *ʃabiiba* /coll n/ youth(s).

ش ب ب [2] ( )
شبّة *ʃabba*[2] <P *shâb*> /n/ alum. ‖*ḥaraq ʃabba [magic]* to burn a piece of alum for the purpose of divining (from the shape into which it cools) the identity of one with the evil eye.
شوبّ *ʃubb* <Fr *chope*> /n pl -*aat*/ tall glass for cold drinks.

ش ب ت
شبت، شبث *ʃabat* /n/ dill. ‖*ʔabu ʃabat* type of poisonous spider.

ش ب ث see ش ب ت and ش ب س

ش ب ح [1]
شبّيح *ʃabbiiḥ* /n pl *ʃabbiiḥa*/ hooligan, thug.
شبّح *ʃabbaḥ*[1] /vi/ to be militantly aggressive, make an assault. - vn *taʃbiiḥ*; ava *miʃabbaḥ*.

ش ب ح [2]
شبّح *ʃabbaḥ*[2] /vt/ to streak, vein (e.g., colours). *ʔiswid miʃabbaḥ bi-ʔabyaḍ* black with white veins. - vn *taʃbiiḥ*; ava/pva *miʃabbaḥ*.
اتشبّح *ʔitʃabbaḥ* or *ʔiʃʃabaḥ* /vi/ to be streaked, be veined (e.g., of colours). - iva *mitʃabbaḥ*.

ش ب ح [3]
شبح *ʃabaḥ* /n pl *ʔaʃbaaḥ*/ ghost, spectre.

ش ب ر [1]
شبّورة *ʃabbuura* <Copt> /n/ fog, mist, haze.
شبّر *ʃabbar*[1] /vi/ to become misty. *ɛenee-ha ʃabbarit* her eyes became misty. - vn *taʃbiir*; ava/pva *miʃabbar*.

ش ب ر [2]
شبر *ʃabar (u)* /vt/ to jinx, put a jinx on. - ava *ʃaabir*.
شبر *ʃibr* /n pl *ʔaʃbaar*/ span of the hand, measurement equal to the span of the hand. ‖*sigaara ʃibr* an extra-long cigarette.
شبرة *ʃibra: ɋatla w-ʃibra* a type of children's marble game.
شبّر *ʃabbar*[2] /vt/ to jinx, put a jinx on. - vn *taʃbiir*; ava/pva *miʃabbar*.

ش ب ر [3] see ش ب ا ر: *ʃabaar, ʃabaara*

ش ب ر [4] see ش ب و ر: *ʃabuura*

ش ب ر ا
شبرا *ʃubra* /prop n/ Shubra, a residential district in the north of Cairo.

ش ب ر ق
شبرق *ʃabraɋ* /vt/ to give a treat to. *ḥ-aʃabraɋ-u b-gineeh* I'll give him a pound as a treat. *ʃabraɋt*[a] *(ɛala) rooḥ-i* I gave myself a treat. - vn *ʃabraɋa*; ava/pva *miʃabraɋ*.
اتشبرق *ʔitʃabraɋ* or *ʔiʃʃabraɋ* /vi/ to give oneself a treat or be given a treat. - iva *mitʃabraɋ*.

ش ب س
اتشبّث *ʔitʃabbis*↑ or *ʔiʃʃabbis*↑ /vi/ to cling, hold on. *ʔil-bint*[i] *mitʃabbisa b-raʔy-a-ha* the girl is clinging to her opinion. - vn *taʃabbus*; ava *mitʃabbis, mutaʃabbis*.

ش ب ش ب
شبشب *ʃibʃib* <T *şıpşıp*> /n pl *ʃabaaʃib*/ pair of backless slippers, (loosely) pair of backless light shoes.
شبشب *ʃabʃib* /vi/ *[magic]* to cast a spell, specifically by beating the genitals with a slipper while pronouncing a magic formula (to jinx, e.g., an inattentive husband or a

female rival). - vn *ʃabʃaba*; ava *miʃabʃib*.

شبشبة *ʃabʃaba* /n/ *[magic]* ritual in which a woman casts a spell by beating her genitals with a slipper while pronouncing a magic formula.

مشبشب *miʃabʃib* /adj */ clever, skilful.

اتشبشب *ʔitʃabʃib* or *ʔiʃʃabʃib* /vi/ (impersonal) passive of *ʃabʃib*. *yaama tʃabʃib-lu* oh! he's been subjected to sorcery many a time! - vn *tiʃabʃiib*; iva *mitʃabʃib*.

ش ب ط

شبط *ʃabaṭ* or *ʃibiṭ (a)* /vi/ to cling, take hold. *ʃabaṭ fi-ʔumm-u* he clung to his mother. *ʔin-naar ʃibṭit fii* the fire got a hold on him. *ʃabaṭ fil-bint[i] ʃabṭa sooda* he fell for the girl in a big way. - vn *ʃabaṭaan, ʃabṭ*; ava *ʃaabiṭ*.

شبطة *ʃabṭa* /pl *-aat*/ instance noun of *ʃabṭ*.

شبطان *ʃabṭaan* /adj */ clinging.

شبّيط *ʃubbeeṭ* /n/ name for various kinds of bristly or prickly wild plant, for instance burweed and alkanet. ‖*naas zayy if-ʃubbeeṭ* quarrelsome people.

اتشبط *ʔitʃabaṭ* or *ʔiʃʃabaṭ* /vi/ (impersonal) passive of *ʃabaṭ*. *ʔitʃabaṭ fii ḥabl* a rope was fixed to it. - iva *mitʃibiṭ*.

شبّط *ʃabbaṭ* /vt/ **1** to cause to cling or take hold. *ʃabbaṭ il-walad fiyya* I made the boy hold onto me. *ʃabbaṭ in-naar fid-duxxaan* let the fire get a hold on the tobacco. ‖*ʃabbaṭ iṣ-ṣamuula f-makan-ha* screw the nut on in its place. **2** to fix temporarily. *ʃabbaṭ il-makana l-ʁaayit ma nlaaqi mikaniiki* get the machine to hang together until we can find a mechanic. - vn *taʃbiiṭ*; ava/pva *miʃabbaṭ*.

اتشبّط *ʔitʃabbaṭ* or *ʔiʃʃabbaṭ* /vi/ passive of *ʃabbaṭ*. - iva *mitʃabbaṭ*.

ش ب ع

شبع *ʃibiʕ (a)* /vi/ to become satiated, have one's fill. *yaklu lamma yiʃbaʕu* they eat until they're full. *ʃibiʕt[i] fii ḍarb* I got my fill of beating him. ‖*da maat wi-ʃibiʕ moot* he's been dead a long time. - vn *ʃabaʕ, ʃabaʕaan*.

شبع *ʃabaʕ (i)* /vt/ to satiate, give (s.o.) a fill of. - vn *ʃabʕ*; ava *ʃaabiʕ*.

شبعة *ʃabʕa* /inst n, pl *-aat*/ a repletion, one's fill. *ʃabʕa kwayyisa* a satisfying meal. ‖*ʃabʕa baʕd[i] guuʕa* see *ʃabaʕa*.

شبعة *ʃabaʕa* /pl *-aat*/ instance noun of *ʃabaʕ*. *ʃabaʕa* (or *ʃabʕa*) *baʕd[i] guuʕa [prov]* a state of satiety after a state of hunger (applied, e.g., to a parvenu).

شبعان *ʃabʕaan* /adj */ **1** satiated, full (with food). ‖*ʔil-ʔakl[i] fiʃ-ʃabʕaan xusaara [prov]* ≈ there's no point in gilding the lily. **2** deep (of water). *ʔil-baḥr[i] ʃabʕaan hina* the Nile is deep here. **3** full (of pleats). **4** wealthy.

شبّع *ʃabbaʕ* /vt/ **1** to satiate, satisfy. *da ʔakl[i] maʸʃabbaʕ-ʃ* that food is not filling. *kalaam-ak ʃabbaʕ-ni bil-ʔimaan* your words have filled me with faith. ‖*kalaam-ak ʃabbaʕ-ni* (1) your words are more satisfying than food. (2) your talk turns me off eating, takes away my appetite. **2** to saturate, fill. **3** to make (e.g., a pleat) full. *ʃabbaʕi k-kusar* make the pleats deep. - vn *taʃbiiʕ*; ava/pva *miʃabbaʕ*.

اتشبّع *ʔitʃabbaʕ* or *ʔiʃʃabbaʕ* /vi/ **1** to be satiated, be satisfied. **2** to be saturated. *ʔil-ʔarḍ itʃabbaʕit bil-mayya* the soil has become saturated with water. **3** to become thoroughly acquainted, acquire a thorough familiarity. *ʔana daaris il-fikra w-mitʃabbaʕ biiha* I've examined the idea and am thoroughly acquainted with it. - ava/iva *mitʃabbaʕ*.

أشبع *ʔaʃbaʕ* = *ʃabaʕ*. - vn *ʔiʃbaaʕ*; ava *miʃbiʕ, muʃbiʕ*.

ش ب ك [1]

شبك *ʃabak[1] (u)* /vt/ **1** to fasten, attach. *ʔuʃbuk il-baab ʕaʃaan il-hawa ma-yiqfil-uu-ʃ* hook the door so the wind won't close it. *ʃabak il-waraq* he fastened the paper (with a clip or staple). ‖*ʃabak ʔidee* he clasped his hands. **2** to involve, engage. *ʔiẓ-ẓuruuf ʃabakit-ni* circumstances have involved me. **3** to arrange an engagement with. *ḥa-nuʃbuk-lu l-bint[i] di walla laʔʔa* shall we get him engaged to this girl or not? **4** to reserve (an article, with a down payment). *ʃabakt il-kursi b-xamsa gneeh* I reserved the chair with a five-pound payment. — /vi/ **5** to become fastened, become attached. *ʔis-samaka ʃabakit fiṣ-ṣinnaara* the fish got caught on the hook. **6** to become involved, become engaged. *ʃabakt[i] fil-xinaaqa* I got involved in the fight. - vn *ʃabakaan, ʃabk*; ava *ʃaabik*; pva *maʃbuuk*.

شبكة *ʃabka* /n pl *-aat*/ **1** instance noun of *ʃabk*. **2** engagement present of jewelry.

شبك *ʃabak[2]* /n/ **1** /coll n/ net(s), netting. **2** /pl *ʃibaak*/ grid, grill.

شبكة *ʃabaka* /n pl *-aat*/ **1** /unit n/ a net. *koorit if-ʃabaka* netball. **2a** any of a range of reticular objects (e.g., hairnet, string bag, grid, grill, lattice). **2b** (communications) network, grid. *ʃabakit ṭuruq* network of roads. *ʃabakit tilifoon* the telephone network. **3** *[auto]* grill. **4** nasty affair, complicated business.

شبكي *ʃabaki* /adj/ reticular.

شبكيّة *ʃabakiyya* /n pl *-aat*/ retina.

شبّاك *ʃibbaak* /n pl *ʃababiik*/ **1** window. *ʃibbaak tazaakir* box office, ticket window. *ʃiriiṭ ʃibbaak* sash cord. **2** bed-end with metal bars.

مشبك *maʃbak* /n pl *maʃaabik*/ **1** any of a range of fastening devices such as a clasp, clip or pin. *maʃbak*

waraq paper clip. *mafbak ɣasiil* clothes peg, clothes pin. *dabbuus mafbak* safety-pin. **2** brooch.

اتشبك ʔitfabak or ʔiffabak /vi/ to become involved. *ʔitfabak bil-bint[a] ɛala ṭuul* he got involved with the girl straight away. - ava *mitfibik*.

انشبك ʔinfabak = ʔitfabak. - vn *ʔinfibaak*; ava *minfibik*.

شبّك fabbik /vt/ **1** to fasten, attach (a number of things, or a number of times). *qaɛadna ṭuul il-leel nifabbik il-waraq* we stayed up all night pinning the papers together. **2** to entangle. - vn *tafbiik*; ava/pva *mifabbik*.

مشبّك *mifabbik* /n/ large lacy pastry, deep-fried and soaked in syrup.

اتشبّك ʔitfabbik or ʔiffabbik /vi/ **1** to be fastened. **2** to be entangled. - iva *mitfabbik*.

اشتبك ʔiftabak /vi/ to become engaged, become entangled. *ʔiftabakna fi-xnaaqa kbiira* we got caught up in a big fight. *ʔig-geef iftabak maɛa l-ɛaduw* the army engaged in battle with the enemy. - vn *ʔiftibaak*; iva *miftibik*.

اشتباك ʔiftibaak /n pl *-aat/ [mil]* engagement.

ش ب ك[2]

شبك *fubuk* <T *çubuk*> /n pl *-aat/ [obsol]* long pipe for smoking, chibouk.

شبكشى *fubukfi* /n pl *-yya/* one who repairs and cleans chibouks.

ش ب ل

شبل *fibl* /n pl *ʔafbaal/* **1** lion cub. — *ʔafbaal* /pl n/ **2a** epithet given to junior players in a sports club (usually soccer). *ʔafbaal il-ʔahli* the Ahli juniors. **2b** Cub Scouts, Wolf Cubs.

ش ب ل و ن

شبلون *fabloon* <perh It *sciablona*> /n pl *-aat/ [text]* silkscreen.

ش ب ن see ش ب ى ن : *fibiin*

ش ب ن ى ز

شابونيز *fabuneez* <Fr *japonaise*> /adj invar/ sleeveless. *fasatiin fabuneez* sleeveless dresses.

ش ب ه

شبه *fabah[1] (i)* /vt/ to bring suspicion on. *wuquuf il-buks[i] quddaam il-beet fabah-na* the stopping of the police-wagon in front of the house cast suspicion on us. *mafy-a-ha huwwa da lli fabih-ha* it's her behaviour that makes people think the worst of her. - vn *fabahaan*; ava *faabih*; pva *mafbuuh*.

يشبه *yifbih, yifbah* /vt and vi; imperf and vn only/ to resemble, bear a resemblance (to). *ʔiṣ-ṣuura ma-tifbih-nii-ʃ* (or *ma-tifbih-lii-ʃ*) the photo doesn't resemble me. *kull[i] fin-lu yifbih-in-lu [prov]* (everything has something resembling it) ≈ like to like, every Jack must have his Jill. - vn *fabah*.

شبه *fabah[2]* /n pl *ʔafbaah/* likeness, resemblance. *fabah biɛiid* a remote resemblance. *huwwa qariib-i wa-laakin mif fabah-i* he's my kinsman but has no resemblance to me. *ʔaɛraaq-u fabah ʔaɛraaq il-ʔishaal* its symptoms resemble those of diarrhoea. ‖*yixlaq min if-fabah ʔarbiɛiin [prov]* (may He create forty of the same likeness!) exclamation on mistaking one person for another.

مشبوه *mafbuuh* /adj */ suspect, fishy, open to suspicion. *bint[i] mafbuuha* a girl with a bad reputation.

شبهة *fubha* /n pl *-aat/* suspicion. ‖*raagil fubha* a man who would bring suspicion on any one who might associate with him.

شبه *fibh* /n, in constr/ semi-, quasi, as in *fibh[i] laqab zayy[i] ʔustaaz* a semi-title like Mister. *fibh[i] gziira* peninsula.

شبيه *fabiih* /adj/ similar (to), resembling, like.

أشبه ʔafbah /el/ more/most like or resembling.

اتشبه ʔitfabah ot ʔiffabah /vi/ to fall under suspicion, be suspected. - ava/iva *mitfibih*.

انشبه ʔinfabah = ʔitfabah. - ava/iva *minfibih*.

شبّه *fabbih* /vt/ to liken, compare. *bi-tfabbih-ni bin-naas il-ħaramiyya dool* do you liken me to those thieving people? - vn *tafbiih*; ava *mifabbih*.

¶ *fabbih ɛala* to try to place. *kunt[i] b-afabbih ɛaleek wi-lamma kkallimt[i] ɛrift-ak ɛala ṭuul* I was trying to place you and when you spoke I knew you right away.

تشبيه *tafbiih* /n/ **1** resemblance, likeness. ‖*fiif wi-tafbiih* see *fiif*. **2** /pl *-aat/* simile.

اتشبّه ʔitfabbih or ʔiffabbih /vi/ **1** to be likened, be compared. **2** to affect an appearance. *ʔil-bint[i] ma-yṣaħħ[i]-ʃ titfabbih bil-walad* a girl should not try to make herself look like a boy! - ava/iva *mitfabbih*.

شابه *faabih* /vt/ to resemble. - vn *mufabha*; ava *mufaabih*.

اتشابه ʔitfaabih[1] or ʔiffaabih /vi/ to bear a resemblance. - ava *mitfaabih*.

اشتبه ʔiftabah /vi/ to have suspicions, suspect. *ʔil-buliis iftabah fii w-gaab taṣriiħ bit-taftiif* the police suspected him and obtained a search warrant. *riggaala muftabah fiihum* suspected men. - vn *ʔiftibaah*; ava *miftibih*; pva *muftabah*.

ش ب و ر

شابوزة *fabuura* /n/ prow. *min id-daffa lif-fabuura*

[prov] from first to last, from head to toe, all included.

ش ب ى
شابى *ʃaaba* /vi/ to reach up, try to reach (for s.th.). *ʃil-waad bi-yʃaabi ɛala l-burtuqaan* the kid is reaching up for the orange. - vn *miʃabiyya*; ava *miʃaabi*.

ش ب ى ن
شبين *ʃibiin* <Syr> /n pl *ʃaʃabiin*/ *[Chr]* 1 attendant on a bride or groom. 2 sponsor, godparent.
¶ *ʃibiin il-koom* /prop n/ Shibin el-Kom, the chief town of the province of Minufiya.

ش ت ا see ش ت ى : *ʃita*

ش ت ت
شتّ *ʃatt (i)* /vi/ 1 to clear out, leave in extreme annoyance. *zahaqit min goz-ha w-ʃattit min il-beet* she got fed up with her husband and left in a huff. 2 to wander, be distracted (of mind, thoughts etc.). *ɛaql-i bi-yʃitt* my mind wanders. — /vt/ 3 *[rur]* to pick up windfalls from (a tree). *ruḥt[i] laqeet in-naxla maʃtuuta* I went and found that all the dates scattered around the base of the palm had been picked up. - vn *ʃatt, ʃatataan*; ava *ʃaatit*; pva *maʃtuut*.
شتّة *ʃatta[1]* /n pl -*aat*/ 1 instance noun of *ʃatt*. 2 /coll/ windfall(s). ‖ *quṭn[i] ʃatta [rur]* scraps of cotton overlooked by the pickers and gathered later.
شتّى *ʃatta[2]↑* /adj invar/ various, diverse.
شتّان *ʃattaan: farq[i] ʃattaan* a huge difference. *ʃattaan been(u) w-been (ʃaxuu)* there's a world of difference between (him) and (his brother).
شتّت *ʃattit* /vt/ 1 to scatter, spread out. *ʃattit il-muẓahra* he broke up the demonstration. ‖ *ʃinta ʃattitt[i] muxx-i* you've bewildered me. 2 to drive (s.o.) from his home. *lamma tʃattit il-ɣalbaan da ḥa-ylaaqi sakan ʃizzaay* if you transfer this poor man (to another city) how is he going to find a home? ‖ *ʃattit ik-koora* he kicked the ball out of play. - vn *taʃtiit*; ava/pva *miʃattit*.
اتشتّت *ʃitʃattit* or *ʃiʃʃattit* /vi/ passive of *ʃattit*. - iva *mitʃattit*.

ش ت ل
شتل *ʃatal (i)* /vt/ to plant seedlings in (the soil). *ruzz[i] maʃtuul* transplanted rice. *ḥa-niʃtil il-ʃarḍ[i] b-ruzz* we'll transplant rice seedlings. - vn *ʃatl*; ava *ʃaatil*; pva *maʃtuul*.
شتل *ʃatl* /coll n/ seedlings, cuttings.
شتلة *ʃatla* /n/ 1 = *ʃatl*. 2 /unit n, pl *ʃitlal*/ a seedling.
شتلاية *ʃatlaaya* /unit n, pl -*aat*/ a seedling.
مشتل *maʃtal* /n/ 1 /pl *maʃaatil*/ plant nursery, arboretum. 2 transplant method of planting rice.
اتشتل *ʃitʃatal* or *ʃiʃʃatal* /vi/ to be transplanted. - iva *mitʃitil*.
شتّل *ʃattil* /vt/ to plant seedlings in the (soil). *ʃir-ruzz[i] lissa mʃattil ʃimbaariḥ* the rice was transplanted only yesterday. - vn *taʃtiil*; ava/pva *miʃattil*.
اتشتّل *ʃitʃattil* or *ʃiʃʃattil* /vi/ to be planted (of seedlings). - iva *mitʃattil*.

ش ت م
شتم *ʃatam (i)* /vt/ to abuse, revile, insult. *ma-ʃatam-ak ʃilla lli mballaɣ-ak [prov]* it is he who passes on another's abuse of you who really abuses you! - vn *ʃatm*; ava *ʃaatim*; pva *maʃtuum*.
شتيمة *ʃitiima* /n pl *ʃataayim*/ insult, verbal abuse.
اتشتم *ʃitʃatam* or *ʃiʃʃatam* /vi/ to be abused, be reviled, be insulted. - iva *mitʃitim*.
انشتم *ʃinʃatam* = *ʃitʃatam*. - iva *minʃitim*.

ش ت ى
شتت *ʃatit (i)* /vi/ it rained. *ʃid-dunya lissa ʃatya* it's just rained. - vn *ʃita*; ava *ʃatya*.
شتا، شتاء *ʃita* /n/ 1 winter season. *gahḥizna liʃ-ʃita* we prepared for the winter. ‖ *zayy[i] layaali ʃ-ʃita* (as tedious) as winter nights. 2 rain.
شتوى *ʃitwi* /adj */ winter, wintery. *ʃiz-zarɛ iʃ-ʃitwi* winter crops. *libs[i] ʃitwi* heavy clothing.
شتويّة *ʃitwiyya* /n pl -*aat*/ winter season, winter period.
مشتى *maʃta* /n pl *maʃaati*/ winter resort.
شتّى *ʃatta[3]* /vi/ 1 to spend the winter, hibernate. *ḥa-nʃatti fi-smaɛiliyya* we'll winter in Ismailia. 2 to dress in warm clothes. *ʃatteena badri s-sanaa-di* this year we started wearing our winter clothes early. 3 *ʃattit* = *ʃatit*. - vn *taʃtiyya*; ava *miʃatti*.

ش ج ر
شجر *ʃagar* /coll n, pl *ʃaʃgaar*/ tree(s), shrub(s). *ʃaʃgaar ziina* ornamental trees and shrubs. *ʃaʃgaar il-quṭn* cotton plants.
شجرة *ʃagara* /unit n, pl -*aat*/ a tree. *ʃagarit nasab* (or *ɛeela*) genealogical tree.
شجراية *ʃagaraaya* /n pl -*aat*/ shrub, bush.
مشجّر *miʃaggar* /adj/ figured with flowers or plants. *qumaaʃ miʃaggar* flower- or foliage-patterned cloth.

ش ج ع
شجاع *ʃugaaɛ* /adj pl *ʃugɛaan*/ brave, courageous.
شجاعة *ʃagaaɛa* /n/ bravery, courage. *ʃil-kasra tiɣlib iʃ-ʃagaaɛa [prov]* numbers overcome courage.

شجيع *ʃagiiɛ, ʃigiiɛ↓* **1** /adj pl *ʃugɛaan*/ brave, courageous. **2** /n/ hero of a Western (film or story).

شجّع *ʃaggaɛ* /vt/ **1** to encourage. *ʃaggaɛnaa ɛala kida* we encouraged him in this. **2** to cheer for, cheer on. *ʃaggaɛna l-fariiq* we cheered the team on. - vn *taʃgiiɛ*; ava *miʃaggaɛ*.

تشجيعي *taʃgiiɛi* /adj */ encouraging. *siɛr[i] taʃgiiɛi [bank]* a (high) rate of exchange for foreign currency set in order to encourage, e.g., tourism.

مشجّع *muʃaggiɛ* /n */ fan, enthusiast. *ʕana min muʃaggiɛiin ik-koora* I'm a soccer fan.

اتشجّع *ʔitʃaggaɛ* or *ʔiʃʃaggaɛ* /vi/ **1** passive of *ʃaggaɛ*. **2** to take courage, pluck up courage. - ava/iva *mitʃaggaɛ*.

ش ج ن

شجن *ʃagan* /n pl *ʃuguun, ʕaʃgaan*/ sorrow.

ش ح ب

شحوب *ʃuḥuub* /n/ paleness (of the skin).

شاحب *ʃaaḥib* /adj/ pale, white (of the skin).

ش ح ب ر

شحبر *ʃaḥbar* /vt/ *[slang]* to smudge, mess, dirty, blacken. - also *ʃaḥwar*. - vn *ʃaḥbara*; ava/pva *miʃaḥbar*.

اتشحبر *ʔitʃaḥbar* or *ʔiʃʃaḥbar* /vi/ *[slang]* to be smudged, messed, dirtied or blackened. - iva *mitʃaḥbar*.

ش ح ت

شحت *ʃaḥat (a)* /vt/ **1** to beg for. *ʔiʃḥat-lak rixiif titɛaʃʃa bii* beg yourself a loaf of bread to eat for your supper. **2** to cadge, borrow. *ʃaḥatt[i] badla ɛafaan ʕaruuḥ il-ḥafla* I scrounged a suit so I could go to the party. — /vi/ **3** to go begging. *ɛallimnaa-hum if-faḥaata sabaquu-na ɛal-ʕabwaab* (we taught them how to beg and they beat us to the doors) ≈ they bite the hand that fed them. - vn *fiḥaata, faḥt*; ava *faaḥit*; pva *maʃḥuut*.

شحّات *ʃaḥḥaat* /n */ beggar, mendicant. *ɛamliin nafs-u-hum faḥḥatiin ɛafaan ma-yidfaɛuu-ʃ il-ʕugra* they're pretending to be destitute so they won't have to pay the rent. ‖*faḥḥaat wi-ɛaayiz rixiif [prov]* he is a beggar but (still he) insists on getting a (whole) loaf, ≈ beggars can't be choosers. - *ʔif-faḥḥaat lu nuṣṣ id-dinya [prov]* the beggar owns half the world (because he gets a share of everyone's possessions). - *zayy[i] faḥḥatiin is-sayyida [prov]* (1) (as swarming and insistent) as the beggars at Sayyida Zaynab. (2) (as sorry-looking a bunch) as the beggars at Sayyida Zaynab.

اتشحت *ʔitʃaḥat* or *ʔiʃʃaḥat* /vi/ **1** to be begged (for). **2** to be borrowed, be cadged. - iva *mitʃiḥit*.

شحّت *ʃaḥḥat* /vt/ to give, lend (with no thought of return). *ʃaḥḥatuu-na ʃwayyit malḥ[a] ɛala ma niʃtiri* (could you) give us some salt until we buy some? *ʃaḥḥatt[i] kull il-huduum il-qadiima* I gave away all the old clothes. *ʃaḥḥatuu-na qirʃ[i] lil-mawluud [beggars]* donate a piastre for the baby. - vn *taʃḥiit*; ava/pva *miʃaḥḥat*.

اتشحّت *ʔitʃaḥḥat* or *ʔiʃʃaḥḥat* /vi/ passive of *ʃaḥḥat*. *ʔij-jakitta di ʃʃaḥḥatit li-xamsiin nafar* this jacket has been lent to numerous people. - iva *mitʃaḥḥat*.

ش ح ح

شحّ *ʃaḥḥ (i)* /vi/ **1** to become scarce, dwindle. *kull[i] ma n-naas bi-tiktar ʔil-masaakin bi-tʃiḥḥ* as people increase in number, housing becomes scarce. *ʔik-kabriit bi-yfiḥḥ il-yomeen dool* matches are getting scarce these days. ‖ *ʔin-niil faḥḥ* the Nile fell. **2** to behave in a miserly way. - vn *faḥaḥaan, faḥḥ, fiḥḥiyya*; ava *faaḥiḥ*.

شحّ *ʃuḥḥ* **1** /n/ meanness. **2** /adj invar/ miserly.

شحيح *ʃiḥiiḥ* /adj/ **1** scarce, sparse, scant. **2** mean, miserly.

ش ح ر

شحار *ʃaḥaar* /n/ diphtherial infection (in animals).

شحّر *ʃaḥḥar* /vi/ to wheeze, croak (because of obstructions in the throat). - vn *taʃḥiir*; ava *miʃaḥḥar*.

ش ح ط

شحط *ʃaḥaṭ (a)* /vt/ **1** to drag, pull tautly (of a rope). **2a** to tie up tightly. *ʔiʃḥaṭ-ha kwayyis bil-ḥabl* tie it firmly with the rope. **2b** to fit firmly in place. *ʃaḥaṭ il-watad bi-ʃakuuf* he fixed the peg firmly in place with a hammer. *ʃaḥṭ[i] b-tasxiin [metal]* shrink-fitting. — /vi/ **3a** to stick, become stuck. *ʔid-durg[i] ʃaḥaṭ* the drawer stuck. **3b** *[naut]* to run aground, take the ground. - vn *ʃaḥaṭaan, ʃaḥṭ*; ava *ʃaaḥiṭ*; pva *maʃḥuuṭ*.

شحط *ʃaḥṭ* /n pl *ʃuḥuuṭ, ʃuḥúṭa/ [deris]* very tall and big (of people).

شحّوطة *ʃaḥḥuuṭa* /n/ double-ended broad chisel with fine teeth.

اتشحط *ʔitʃaḥaṭ* or *ʔiʃʃaḥaṭ* /vi/ passive of *ʃaḥaṭ*. - iva *mitʃiḥiṭ*.

انشحط *ʔinʃaḥaṭ* = *ʔitʃaḥaṭ*. - iva *minʃiḥiṭ*.

شحّط *ʃaḥḥaṭ* /vi/ **1a** to run out (e.g., of fuel). *ʔil-ɛarabiyya ʃaḥḥaṭit* the car has run out of petrol. ‖*geeb-i ʃaḥḥaṭ* I've run out of money. - *zoor-i ʃaḥḥaṭ* my throat has become dry. **1b** to become used up, run out. *ʔig-gaaz ʃaḥḥaṭ min il-babuur* the primus stove is out of

paraffin. ‖*ʕil-balaḥ bi-yfaḥḥaṭ fil-buqq* dates make one's mouth dry. **2** *[naut]* to run aground, take the ground. — /vt/ **3** *[metal]* to shrink. *faḥḥaṭ gilba* he shrank a bush. **4** to drag, pull tightly. - vn *taʃḥiiṭ*; ava/pva *miʃaḥḥaṭ*.

اتشحّط *ʔitʃaḥḥaṭ* or *ʔiʃʃaḥḥaṭ* /vi/ **1** to be shrunk. **2** to be pulled tightly. - iva *mitʃaḥḥaṭ*.

ش ح ط ط

شحطط *faḥṭaṭ* /vt/ to drag, lug or send around from place to place. *faḥṭaṭ-ni min maktab li-maktab* he sent me around from office to office (on a wild goose chase). - vn *faḥṭaṭa*; ava/pva *miʃaḥṭaṭ*.

اتشحطط *ʔitʃaḥṭaṭ* or *ʔiʃʃaḥṭaṭ* /vi/ to be dragged or lugged around from place to place. - iva *mitʃaḥṭaṭ*.

ش ح ك ل

شحكل *faḥkil* /vt/ to trip. - vn *faḥkala*; iva *miʃaḥkil*.

اتشحكل *ʔitʃaḥkil* or *ʔiʃʃaḥkil* /vi/ to trip, stumble. *(ʕaliil il-baxt[i]) yiʃʃaḥkil fi-bḍaan-u [prov]* (one destined to be unlucky) trips over his own balls. - vn *tiʃaḥkiil*; ava *mitʃaḥkil*.

ش ح م

شحم *faḥm* /n pl *fuḥuum, fuḥumaat*/ **1** grease, lubricant, axle-grease. *lamma f-faḥm[i] btaaʕ il-ʕarabiyya yixlaṣ ma-tiftaxal-f[i] maẓbuuṭ* when the car runs out of lubricant it doesn't run well. **2a** fat. *faḥm[i] w-laḥm* rubber-blubber, fat and flab. **2b** tallow.

شحمة *faḥma* /n pl *-aat*/ a bit of grease. ‖*faḥmit il-widn* ear-lobe.

شحماية *faḥmaaya* = *faḥma*.

شحمي *faḥmi* /adj/ pertaining to grease.

شحّام *faḥḥaam* /n */ greaser.

مشحمة *maʃḥama* /n pl *maʃaaḥim*/ **1** grease-gun. **2** lubrication point.

شحّم *faḥḥam* **1** /vt/ *[mech]* to grease, lubricate. *faḥḥam il-ʕarabiyya w-xayyar iz-zeet* grease the car and change the oil. **2** /vi/ to put on fat, become fatty. *faḥḥam wi-laḥḥam* it put on fat and flesh. - vn *taʃḥiim*; ava/pva *miʃaḥḥam*.

مشحّم *miʃaḥḥam* /adj/ greasy, covered with (lubricating) grease. *huduum-i mfaḥḥama* my clothes are all greasy.

اتشحّم *ʔitʃaḥḥam* or *ʔiʃʃaḥḥam* /vi/ to be greased, be lubricated. - iva *mitʃaḥḥam*.

ش ح ن [1]

شحن *faḥan (a)* **1** /vt/ **1a** to load, load up, charge, freight. *saʕaat il-biḍaaʕa b-titsiriʕ fiʃ-faḥn* sometimes the goods are stolen in loading. ‖*ʕir-ragil-da maʃḥuun minnak* that man is full of malice for you. **1b** *[elec]* to charge. **2** /vi/ **2a** to be loaded up, be charged, be freighted (with cargo, fuel etc.). *ʔil-ʕarabiyya faḥanit* the car has been fully loaded. **2b** *[elec]* to be charged. - vn *faḥn*; ava *faaḥin*; pva *maʃḥuun*.

شحنة *fuḥna, faḥna, fiḥna* /n pl *-aat*/ **1** cargo, load. **2** (electric) charge.

اتشحن *ʔitʃaḥan* or *ʔiʃʃaḥan* = *faḥan* 2. - iva *mitʃiḥin*.

ش ح ن [2]

شاحن *faaḥin↑* /vt/ to quarrel with, dispute with. - vn *miʃaḥna*; ava *miʃaaḥin*.

اتشاحن *ʔitʃaaḥin↑* or *ʔiʃʃaaḥin↑* /vi/ to quarrel (with o.a.). - ava *mitʃaaḥin*.

ش ح و ر

شحور *faḥwar* /vt/ *[slang]* to smudge, mess, dirty, blacken. - also *faḥbar*. - vn *faḥwara*; ava/pva *miʃaḥwar*.

اتشحور *ʔitʃaḥwar* or *ʔiʃʃaḥwar* /vi/ *[slang]* to be smudged, messed, dirtied or blackened. - vn *tiʃaḥwiir*; iva *mitʃaḥwar*.

ش خ ب

شخب *faxab (u)* /vi/ to gush (with a gurgling sound). ‖*damm-u baqa yiʃxub* his blood was spurting out. - vn *faxb, faxabaan*; ava *faaxib*.

ش خ ب ط

شخبط *faxbaṭ* /vi/ to scrawl, scribble. - vn *faxbaṭa*; ava/pva *miʃaxbaṭ*.

شخبوطة *faxbuuṭa* /n pl *faxabiiṭ*/ scribble, scrawl.

شخبيطة *faxbaṭiiṭa [children]* = *faxbuuṭa*.

اتشخبط *ʔitʃaxbaṭ* or *ʔiʃʃaxbaṭ* /vi/ to be scrawled, be scribbled. - iva *mitʃaxbaṭ*.

ش خ خ

شخ *faxx (u)* /vt/ *[coarse]* to excrete. *faxx it-tiçiila* (or *xara* or *wasaaxa*) to shit. *faxx[i] mayya* (or *il-xafiifa*) to pee. - vn *faxx, faxaxaan*; ava *faaxix*; pva *maʃxuux*.

شخّة *faxxa* /n pl *-aat*/ **1** /inst n/ a (single) urination or defecation. ‖*raaḥ faxxa f-ḥammaam [coarse]* he died in total obscurity. **2** stool or (specific amount of) urine. ‖*faxxit il-ʕaguuza [coarse]* dry *muluxiyya* cooked and eaten cold. - *ʔabu* (or *ʔumm[i]*) *faxxa [deris]* (1) a bed-wetter. (2) a child who wets or soils himself. (3) a nobody.

شخاخ *ʃuxaax* /n/ urine or faeces.

شخّاخ *faxxaax* /n */ *[abus]* one who frequently wets or soils himself.

اتشخّ ʔitʃaxx or ʔiʃʃaxx /vi/ to be excreted. - iva *mitʃaxx*.
انشخّ ʔinʃaxx = ʔitʃaxx. - iva *minʃaxx*.
شخّخ ʃaxxax /vt/ to cause to excrete. *ʃaxxaxit il-waad* she put the kid on the potty. ‖*ʃaxxaxt-u min il-xoof [coarse]* I scared him shitless. - vn *taʃxiix*; ava *miʃaxxax*.
اتشخّخ ʔitʃaxxax or ʔiʃʃaxxax /vi/ to be made to excrete. - iva *mitʃaxxax*.

ش خ ر

شخر ʃaxar (u) /vi/ *[coarse]* to snort, grunt. *ʃaxart-i-lu* I snorted at him (I made what is considered a vulgar sound, to show my annoyance with him). - vn *ʃaxr*; ava *ʃaaxir*.
شخرة ʃaxra /n pl *-aat*/ **1** /inst n/ a snort. **2** a snore.
شخير ʃixiir /n/ (sound of) snoring. *zahaqt[i] min ʃixiir-u l-ʕaali* I'm fed up with his loud snoring.
اتشخر ʔitʃaxar or ʔiʃʃaxar /vi/ (impersonal) passive of *ʃaxar*. *lamma qult-i-lhum ʕala raʔy-i ʔitʃaxar-li* when I told them my opinion I was pooh-poohed. - iva *mitʃixir*.
شخّر ʃaxxar /vi/ to snore. - vn *taʃxiir*; ava *miʃaxxar*.

ش خ ر م

شخرم ʃaxram /vt/ *[slang]* to wreck, derange, mess up, confuse. - vn *ʃaxrama*; ava/pva *miʃaxram*.
اتشخرم ʔitʃaxram or ʔiʃʃaxram /vi/ to be wrecked, deranged, messed up or confused. - iva *mitʃaxram*.

ش خ ش خ

شخشخ ʃaxʃax **1** /vt/ to cause to rustle, rattle or jingle. *ʃaxʃax il-filuus fi-geeb-u* he jingled the money in his pocket. ‖*ʕaʕad yiʃaxʃax il-waad ʕala riglee* he sat dandling the boy on his knee. **2** /vi/ to rustle, rattle, jingle. *ʃaxʃaxit iṣ-ṣagaat* the jangling of finger cymbals. - vn *ʃaxʃaxa*; ava/pva *miʃaxʃax*.
شخشيخة ʃuxʃeexa /n pl *ʃaxaʃiix*/ **1** rattle (toy). **2a** small cupola (of carved wood and with small windows) over a *durʕaaʕa*. **2b** gazebo.
اتشخشخ ʔitʃaxʃax or ʔiʃʃaxʃax /vi/ to rustle or be made to rustle, rattle or be made to rattle, jingle or be made to jingle. - ava/iva *mitʃaxʃax*.

ش خ ش ل

شخشلي ʃaxʃulli /coll n/ variety of tumbler pigeon distinguished by a white neck.

ش خ ص

شخص ʃaxṣ /n pl ʔaʃxaaṣ/ person, individual.
شخصي ʃaxṣi /adj */ personal, private. *ḥikaaya ʃaxṣiyya* a personal matter. *biṭaaqa ʃaxṣiyya* identity card.
¶ *ʃaxṣiyyan* /adv/ personally.
شخصيّة ʃaxṣiyya /n pl *-aat*/ **1** personality. ‖*ma-lii-ʃ ʃaxṣiyya maʕaakum* you don't respect me. **2** character (in a play etc.).
شاخص ʃaaxiṣ /n pl *ʃawaaxiṣ*/ **1** pole, rod (for sighting, measuring etc.). **2** target (in shooting).
شخّص ʃaxxaṣ /vt/ to diagnose. - vn *taʃxiiṣ*; ava/pva *miʃaxxaṣ*.
تشخيص taʃxiiṣ /n/ acting.
مشخّصيّة miʃaxxaṣiyya /n/ *[obsol]* drama, acting.
مشخّصاتي miʃaxxaṣaati /n pl *-yya*/ **1** *[obsol]* actor. **2** disparaging form of reference to an actor.
اتشخّص ʔitʃaxxaṣ or ʔiʃʃaxxaṣ /vi/ to be diagnosed. - iva *mitʃaxxaṣ*.

ش خ ط

شخط ʃaxaṭ (u) /vi/ to shout angrily, bawl. *ʃaxaṭ fil-muwaẓẓaf* he bawled out the employee. *ʃaxṭ[i] w-naṭr* roaring and bellowing. - vn *ʃaxṭ*; ava *ʃaaxiṭ*.
شخطة ʃaxṭa /inst n, pl *-aat*/ an angry shout.
اتشخط ʔitʃaxaṭ or ʔiʃʃaxaṭ /vi/ (impersonal) passive of *ʃaxaṭ*. *ʔitʃaxaṭ fiina* we were shouted at. - iva *mitfixiṭ*.

ش خ ل ع

شخلع ʃaxlaʕ /vt/ **1** to cause to move sensuously, cause to sway. *ʔiṭ-ṭabl[i] bi-yʃaxlaʕ ir-raqqaaṣa* the drumming makes the dancer move sensuously. **2** to give a hard time to. - vn *ʃaxlaʕa*; ava/pva *miʃaxlaʕ*.
مشخلع miʃaxlaʕ /adj/ alluring. *bint[i] miʃaxlaʕa* a dishy girl. *ʃustaan miʃaxlaʕ* an immodestly fetching and fancy dress.
مشخلعة miʃaxlaʕa /n pl *-aat/ [rur]* a broad and heavily ornamented gold necklace.
اتشخلع ʔitʃaxlaʕ or ʔiʃʃaxlaʕ /vi/ to move sensuously. *bi-titʃaxlaʕ zayy il-ʁaziyya* she shakes herself like a belly-dancer. - ava *mitʃaxlaʕ*.

ش خ ل ل

شخلل ʃaxlil **1** /vt/ to cause to jingle or rattle. **2** /vi/ to rattle, jingle. *ṣidr-u bi-yʃaxlil* his chest rattles. - vn *ʃaxlala*; ava/pva *miʃaxlil*.

شخلولة ʃaxluula /n pl *ʃaxaliil*/ metal jingle (especially of a tambourine).
شخليلة ʃuxleela = *ʃaxluula*.
اتشخلل ʔitʃaxlil or ʔiʃʃaxlil /vi/ to jingle or be made to jingle, rattle or be made to rattle. - ava/iva *mitʃaxlil*.

ش د خ

شدخ ʃadax (a) /vt/ to crack. *kida ʃadaxt il-kubbaaya*

now you've cracked the glass! - vn *ʃadx, ʃadaxaan*; ava *ʃaadix*; pva *maʃduux*.

شدخ *ʃadx* /n pl *ʃuduux/* crack.

اتشدخ *ʔitʃadax* or *ʔiʃʃadax* /vi/ to be cracked. - iva *mitʃidix*.

انشدخ *ʔinʃadax* = *ʔitʃadax*. - iva *minʃidix*.

ش د د

شدّ *ʃadd (i)* /vt/ **1** to pull. ***ʃaddu l-ɣarabiyya*** they towed the car. *ʃadd is-sifoon* he flushed the lavatory. *ʃadd[i] nafaseen min is-sigaara* he took two drags on the cigarette. ‖ *ʔil-ḥikaaya di bi-tʃidd intibaah in-naas* this affair draws people's attention. **2a** to pull taut, tighten. *ʃadd iṭ-ṭabla* he tightened the drumhead. *ḥaaga bi-tʃidd il-ʔaɛṣaab* something which tenses the nerves. ‖ *ʃidd[i] ḥeel-ak* ≈ take courage (phrase of encouragement to one in difficult circumstances, the response being *ʔiʃ-ʃadd[a] ɣal-alla)*. - *ʃadd[a] ɣalayya s-salx* ≈ he made cruel fun of me. **2b** to tune (a stringed instrument). **3** to saddle, harness (an animal). — /vi/ **4** to pull, tighten. *lamma yinʃaf bi-yʃidd* when it dries, it pulls together. *baṭn-i bi-tʃidd[a] ɣalayya* my stomach is cramping me. **5** to become firm or severe. *ʔil-mudarris ʃadd[a] ɣala t-talamza* the teacher clamped down on the pupils. - vn *ʃadd, ʃadadaan*; ava *ʃaadid*; pva *maʃduud*.

¶ *ʃidd* /fem *ʃiddi*; pl *ʃiddu/ [joc]* move! speed up!

شدّة *ʃadda* /n pl *-aat/* **1** instance noun of *ʃadd. maʃduud ʃadda waḥda* evenly stretched. **2** skeleton, frame (e.g., for a reinforced concrete floor or ceiling, for a boat). *ʔiʃ-ʃadda btaaɛit ik-kiliim* the structure of warp and weft threads in a carpet. ‖ *laazim niɛmil-lu ʃadda* we must put a splint (or splints) on him. **3** *[mil]* pack, kit. **4** *[gram]* diacritical mark placed over a consonant to denote doubled value.

شدّة *ʃidda* /n/ **1** strength, intensity. *ʃiddit iʃ-ʃams* the strength of the sun. *rafaḍ bi-ʃidda* he refused vehemently. *ʔuɣma ɣalee min ʃiddit il-farḥa* he fainted from sheer joy. **2** hardship, distress.

شدّيّة *ʃiddiyya* /n/ **1** strength. **2** hardship, distress.

شديد *ʃidiid* /adj pl *ʃudaad, ʃidaad/* **1** strong, robust. *raagil ʃidiid liʃ-ʃuɣl* a strong man for the work. *ʔarḍ[i] ʃdiida* rich land, fertile land. **2** intense, severe, extreme. *ḍooʔ ʃidiid* intense light. *ʃidiid iz-zaxrafa* heavily ornamented. *ḥiraasa ʃdiida* close guard, heavy guard. *maraḍ ʃidiid* severe illness. *kalaam ʃidiid* or *lahga ʃdiida* extreme language.

أشدّ *ʔaʃadd* /el/ more/most strong, intense etc. *ʔil-xinaaɋa dayra ɣala ʔaʃadd-a-ha* the quarrelling has reached fever pitch.

شدّاد *ʃaddaad* /n pl *-aat/* any of a number of devices the purpose of which is to provide tension or traction (e.g., a splint, chain-adjustor). ‖ *ʔibn[i] ʃaddaad* (1) heavy smoker of hashish (usually in a *gooza*). (2) see *ɣantar*. - *ʔaal ʃaddaad* hashish-smokers.

مشدّ *miʃadd* /n pl *-aat/* corset, girdle.

اتشدّ *ʔitʃadd* or *ʔiʃʃadd* /vi/ passive of *ʃadd*. - iva *mitʃadd*.

انشدّ *ʔinʃadd* = *ʔitʃadd*. - iva *minʃadd*.

شدّد *ʃaddid* **1** /vt/ to intensify. *ʔil-buliiṣ ʃaddid ir-riqaaba ɣala l-beet* the police intensified surveillance of the house. **2** /vi/ to act firmly, act severely. *ʃaddid ɣala l-walad ʃiwayya* be a bit (more) severe with the boy! - vn *taʃdiid*; ava *miʃaddid*.

اتشدّد *ʔitʃaddid* or *ʔiʃʃaddid* /vi/ to be intensified. *ʔir-riqaaba tʃaddidit* surveillance was intensified. - iva *mitʃaddid*.

متشدّد *mutaʃaddid↑* /adj */ bigoted.

اشتدّ *ʔiʃtadd* /vi/ to become intense, become stronger. *ʔik-kuḥḥa ʃtaddit* the cough became more severe. ‖ *ya ʔarḍ iʃtaddi ma ɣaleeki ɋadd-i* (Earth, pull yourself together! no one as great as me walks your surface) ≈ I'm the best there is! (comment on arrogance). - vn *ʔiʃtidaad*; ava *miʃtidd, muʃtadd↑*.

ش د ر see ش ا د ر : *ʃaadir*

ش د ق

شدق *ʃidɋ* /n *ʃidaaɋ, ʃiduuɋ/* side of the mouth. ‖ *ʔabu ʃdaaɋ* wide-mouthed, fleshy-faced.

اتشدّق *ʔitʃaddaɋ* or *ʔiʃʃaddaɋ* /vi/ **1** *[deris]* to chew. *ṭuul in-nahaar titʃaddaɋ bil-libaan* all day long she chews away at gum. **2↑** to repeat erudite words senselessly. - also *ʔitmaʃdaɋ*. - vn *taʃadduɋ↑*; ava *mitʃaddaɋ*.

ش د ه

شده *ʃadah (a)↑* /vt/ to surprise. - vn *ʃadh*; ava *ʃaadih*; pva *maʃduuh*.

اتشده *ʔitʃadah* or *ʔiʃʃadah* /vi/ to be surprised, be perplexed. - iva *mitʃidih*.

انشده *ʔinʃadah* = *ʔitʃadah*. - iva *minʃidih*.

ش د و ف

شادوف *ʃaduuf* /n pl *ʃawadiif/* counterpoised implement for raising irrigation water, shadoof (see Pl.E, 14).

ش د ى

شادى *ʃaadi↑* /n/ (male) singer.

شادية *ʃadya↑* /n pl *-aat/* female singer.

ش ذ ذ see ش ز ز

ش ذ ل see ش ز ل

ش ذ و see ش ز و

ش ر ا ب
شراب *ʃuraab, ʃaraab*[1] <T *çorap*> /n pl *-aat*/ pair of socks, pair of stockings. *koora ʃaraab* cloth ball used in street games.

ش ر ا ق
شراق *ʃiraaq* /n/ pitchpine.

ش ر ء ب
شرأب *ʃarʔab* /vt/ to stretch, crane (one's neck or head). *bi-yʃarʔib raas-u w-yirakkiz ɛeen-u* he cranes his neck and stares fixedly. -vn *ʃarʔaba*; ava/pva *miʃarʔib*.

ش ر ب [1]
شرب *ʃirib (a)* /vt/ **1** to drink. *ʃiribt il-murr* I've drunk (from the cup of) bitterness. *w-ana b-aɛuum b-afrab mayya ktiir* when I swim I swallow a lot of water. *niʃrab fi-ṣiḥḥit-u* let's drink his health. ‖*ʃaarib min bizz umm-u* (he has drunk from his mother's breast) said of someone possessing great strength and courage. - *ʃiʃrab mil-baḥr* ≈ to hell with you! - *huwwa b-yiʃrab* he drinks (alcoholic drinks). **2** to absorb, drink in. *lamma r-ruzz*[i] *yiʃrab il-mayya* when the rice absorbs the water. *ʃirib il-kaar w-huwwa ṣyayyar* he learned the trade while he was young. **3** to smoke (cigarettes). *ʃinta miʃ laazim tiʃrab sagaayir kitiir* you must not smoke a lot. - vn *ʃurb*; ava *ʃaarib*; pva *maʃruub, maʃruub*.
مشروب *maʃruub* /n pl *-aat, maʃaṛiib*/ drink, beverage. *ʃiʃtaraa-li maʃruub* he bought me a drink.
شربة *ʃarba* /n/ **1** /inst n, pl *-aat*/ a (single) drink. ‖*raaḥ fi-ʃarbit mayya* (1) he died a sudden or pointless death. (2) he (or it) was a complete flop. **2** /pl *ʃurab*/ purgative. *ʃarbit malḥ ingiliizi* dose of Epsom salts. ‖*ʃil-ɛaruusa ṭilɛit ʃarba* the bride turned out to be a disappointment. see further under ش ر ب ا ت
شربان *ʃarbaan* /adj */ **1** having had a drink of water or beverage. *ʃil-ʔarḍ*[i] *ʃarbaana* the land has been given water. *ʔana ʃarbaan talaata ɛaṣiir* I've just had three (glasses) of juice. **2** having absorbed or thoroughly learned (e.g., a skill). *ʃarbaan iṣ-ṣanɛa min ʔahl-a-ha* he has learnt the craft from its masters.
شوربة *ʃurba* **1** /n/ soup, broth. **2** /adj invar/ useless. *goon ʃurba* a useless goalkeeper.
شرب *ʃirb* /n/ *[rur]* dried mud.
شربة *ʃirba* /n/ breeze, fresh air. -/adjectivally/ *ʔooḍa ʃirba* an airy room.

شراب *ʃaraab*[2] /n/ beverage with a fruit base.
شرّيب *ʃarriib* /n pl *ʃarriiba*/ heavy drinker (of spirits).
مشربيّة *maʃrabiyya* /n/ **1** /pl *-aat*/ *[obsol]* small external platform projecting from the *maʃrafiyya* (used for the purpose of cooling jars of water). **2** /no pl/ **2a** (loosely) the technique and product of turned wood-work (cf *maʃrafiyya*). **2b** eye (of a needle).
اتشرب *ʔitʃarab* or *ʔiʃʃarab* /vi/ **1** to be drunk. *ʔiʃ-ʃaay iʃʃarab* the tea was drunk. **2** to be absorbed. **3** to be smoked. -iva *mitʃirib*.
انشرب *ʔinʃarab* = *ʔitʃarab*. -iva *minʃirib*.
شرّب *ʃarrab*[1] /vt/ **1** to give to drink. *ʃarrab il-firaax* he watered the chickens. *ʃarrabt-a-ha ḥaaga saqɛa* I gave her a cold drink. ‖*ʃarrab-ha min kiɛan-ha* he gave her a hard time. **2** to cause to absorb. *miʃarraba b-loon ʔaḥmar* tinted with red. **3** to make to smoke. **4** to air (e.g., a room). — /vi/ **5** to make way for a current of air to enter. -vn *taʃriib*; ava/pva *miʃarrab*.
اتشرّب *ʔitʃarrab*[1] or *ʔiʃʃarrab*[1] /vt/ **1** to be caused to absorb or soak up. **2** (also *ʔitʃarrab nafas-u*) to catch one's breath, take a breather. *ʔuqɛud iʃʃarrab (nafas-ak) mis-sillim* sit down and catch your breath after (climbing) the stairs. -vn *taʃarrub*; iva *mitʃarrab*.

ش ر ب [2]
شراب *ʃurraab* /coll n/ tassel(s).
شرّابة *ʃurraaba* /unit n, pl *ʃarariib, ʃurrabaat*/ a tassel. ‖*ʃurraabit xurg* (1) saddle tassel. (2) person of no consequence, nonentity.
مشرّب *miʃarrab* /adj/ decorated with tassels.

ش ر ب [3]
شرّب *ʃarrab*[2] /vt/ *[carp]* to plane (wood). ‖*ʃaarit taʃriib* smoothing plane. -vn *taʃriib*; ava/pva *miʃarrab*.
اتشرّب *ʔitʃarrab*[2] or *ʔiʃʃarrab*[2] /vi/ *[carp]* to be planed. -iva *mitʃarrab*.

ش ر ب [4]
شارب *ʃaarib* /n pl *ʃawaarib*/ moustache.

ش ر ب [5] see ش ر ا ب : *ʃuraab*[1], *ʃaraab*[1]

ش ر ب ا ت see also ش ر ب [1]
شربات *ʃarbaat* /fem n/ **1** fruit or rose-flavoured syrup, drink made of diluted syrup. ‖*damm-u ʃarbaat* he is sweet-natured. - *ʔil-bint*[i] *di ʃarbaat* this girl is a honey! - *ɛahwa* (or *ʃaay) ʃarbaat* over-sweet coffee (or tea). **2** sugar syrup used in the preparation of various sweetmeats.
شرباتلي *ʃarbatli* /n pl *-yya*/ vendor of sweet drinks.

شرباتات *ʃarbataat* /adj invar/ *[women, joc]* sweet, cute (especially of children).

ش ر ب ش see ش ر ب و ش : *ʃarbuuʃ*

ش ر ب ك

شربك *ʃarbik [slang]* **1** /vt/ to entangle, foul up, mix up. **2** /vi/ to become entangled, fouled or mixed up. *ʕil-xuṭuuṭ miʃarbika f-baʕḍ-a-ha* the lines are entangled with one another. - vn *ʃarbaka*; ava/pva *miʃarbik*.

اتشربك *ʕitʃarbik* or *ʕiʃʃarbik* /vi/ *[slang]* to be or become entangled, fouled up or mixed up. - ava/iva *mitʃarbik*.

ش ر ب و ش

شربوش *ʃarbuuʃ* <P *sar-posh*> /n pl *ʃarabiiʃ*/ hood for protecting the lit tobacco in a water-pipe.

ش ر ب و ن

شاربون *ʃarboon* <Fr *charbon*> /n/ **1** carbon. **2** *[auto]* coke deposits (in an engine). **3** *[elec]* carbon-points (in a generator).

ش ر ت

شورت *ʃurt* <Engl> **1** /n pl *-aat, -aat*/ shorts, short trousers. **2** /adj invar/ short (of clothes). *ʔamiiṣ ʃurt* short-sleeved shirt. *banṭaloon ʃurt* shorts. - also *ʃurṭ*.

ش ر ج

شرج *ʃaraǧ* /n/ anus.

شرجي *ʃaragi* /adj/ anal. *ḥuʔna ʃaragiyya* enema.

ش ر ح [1]

شرح *ʃaraḥ [1] (a)* /vt/ to explain, elucidate. *ʃaraḥ id-dars* he explained the lesson. ‖ *ʕamr [i] yṭuul ʃarḥ-u* a complicated matter. - vn *ʃarḥ*; ava *ʃaariḥ*; pva *maʃruuḥ*.

شرح *ʃarḥ* **1** /prep, always w pron suff/ the same as. *qaṣṣar il-fustan-da xamsa santi wil-fustaan it-taani ʃarḥu* shorten this dress five centimetres and the other one the same. **2** /n pl *ʃuruuḥ*/ explanation.

شريحة *ʃariiḥa* /n pl *ʃaraayiḥ*/ **1** division, section. *ʃariiḥa ḍaribiyya* income or tax bracket. **2a** microscope slide. **2b** photographic slide. **3** slice (of meat etc.).

مشرحة *maʃraḥa* /n pl *maʃaariḥ*/ **1** mortuary, morgue. **2** autopsy room.

اتشرح *ʕitʃaraḥ [1]* or *ʕiʃʃaraḥ [1]* /vi/ to be explained, be elucidated. - iva *mitʃiriḥ*.

انشرح *ʕinʃaraḥ [1]* = *ʕitʃaraḥ [1]*. - vn *ʕinʃiraaḥ*; iva *minʃiriḥ*.

شرّح *ʃarraḥ* /vt/ **1** to cut into slices, shreds or strips. **2** *[surg]* to dissect. - vn *taʃriiḥ*; ava/pva *miʃarraḥ*.

اتشرّح *ʕitʃarraḥ* or *ʕiʃʃarraḥ* /vi/ **1** to be cut into slices, shreds or strips. **2** *[surg]* to be dissected. - iva *mitʃarraḥ*.

ش ر ح [2]

شرح *ʃaraḥ [2] (i): ʃaraḥ il-ʔalb* (or *is-sidr* or *ir-rooḥ*) to give pleasure, afford delight. *ɣuna s-sitt [i] ʕumm [i] kulsuum bi-yiʃriḥ il-ʔalb* Umm Kalthum's singing is a delight. - vn *ʃaraḥaan*; ava *ʃaariḥ*; pva *maʃruuḥ*.

شرح *ʃiriḥ* /adj */ **1** open, breezy, comfortable, relaxing (of places). **2** friendly, pleasant (of people).

أشرح *ʔaʃraḥ* /el/ **1** more/most open, breezy (of places). **2** more/most pleasant (of people).

مشرح *muʃriḥ* /adj */: *muʃriḥ il-ʔalb* (or *is-sidr* or *ir-rooḥ*) pleasure-giving, delightful.

انشرح *ʕinʃaraḥ [2]* /vi/ passive of *ʃaraḥ [2]*. - vn *ʕinʃiraaḥ*; iva *minʃiriḥ*.

اتشرح *ʕitʃaraḥ [2]* or *ʕiʃʃaraḥ [2]* = *ʕinʃaraḥ [2]*. - iva *mitʃiriḥ*.

ش ر خ

شرخ *ʃarax, ʃarax (u)* /vt/ to crack, make a crack in. *ʔizaaza maʃruuxa* a cracked bottle. - vn *ʃarx, ʃarx*; ava *ʃaarix*; pva *maʃruux, maʃruuχ*.

شرخ *ʃarx, ʃarx* /n pl *ʃuruux*/ crack, fissure.

اتشرخ *ʕitʃarax* or *ʕiʃʃarax* /vi/ to crack, be cracked. *ʕik-kubbaaya wiʔiʕit wi-ʃʃaraxit* the glass fell and cracked. - iva *mitʃirix*.

انشرخ *ʕinʃarax* = *ʕitʃarax*. - iva *minʃirix*.

شرّخ *ʃarrax, ʃarrax* **1** /vt/ to crack (a number of things or a number of times). *ʕiʃ-ʃams [i] ʃarraxit il-buuya* the sun cracked the paint. **2** /vi/ to crack, become cracked. *ʕil-ʕarḍ [i] niʃfit wi-ʃarraxit* the earth became dry and cracked. - vn *taʃriix*; ava/pva *miʃarrax*.

اتشرّخ *ʕitʃarrax* or *ʕiʃʃarrax* /vi/ to crack, be or become cracked. - ava/iva *mitʃarrax*.

ش ر د [1]

شرد *ʃarad (u, i)* /vi/ **1** to make an escape, slip away. *ʃarad minni fiz-zaḥma* he managed to escape me in the crowd. *ʕin-noom ʃarad min ʔiyuun-i* sleep fled from my eyes. **2** to become absent-minded, go wool-gathering. - vn *ʃuruud, ʃaradaan*; ava *ʃaarid*.

شرّد *ʃarrad* /vt/ to disperse, displace, render homeless. *ʕil-ḥarb [i] ʃarradit naas kitiir* the war made many people homeless. - vn *taʃriid*; ava/pva *miʃarrad*.

اتشرّد *ʕitʃarrad* or *ʕiʃʃarrad* /vi/ to be rendered homeless, become a vagrant. - vn *taʃarrud*; ava/iva *mitʃarrad, mutaʃarrid*.

متشرّد *mutaʃarrid* /adj */ loutish and uncouth, yobbish.

ش ر د [2]
شردت *ʃaradit (i)* /vi/ it was hot and oppressive (of weather). *ʔid-dinya ʃaradit ʔawi ʔimbaariḥ* it was awfully hot and stuffy yesterday. - vn *ʃard*; ava *ʃaarid*.
شرد *ʃard* /n/ hot and oppressive breeze, stifling heat.
شردة *ʃarda* = *ʃard*. *ʕizz if-ʃarda* the peak of the midday heat.

ش ر د ح
شردح *ʃardaḥ* /vt/ to abuse in a vulgar or common fashion. - vn *ʃardaḥa*; ava *miʃardaḥ*.
شردوح *ʃarduuḥ* /adj pl *ʃaradiiḥ*/ low-class, foul-mouthed (usually of a woman). - also *ʃarfuuḥ*.
اتشردح *ʔitʃardaḥ* or *ʔiʃʃardaḥ* /vi/ to break into vulgar and foul-mouthed abuse. - ava *mitʃardaḥ*.

ش ر د م
شردم *ʃardim* /vt/ *[slang]* to treat roughly. - vn *ʃardama*; ava/pva *miʃardim*.
اتشردم *ʔitʃardim* or *ʔiʃʃardim* /vi/ *[slang]* to be roughly treated. - iva *mitʃardim*.

ش ر ر [1]
شرّ *ʃarr [1] (u)* /vi/ to drip, dribble. *ʔil-ḥanafiyya bi-tʃurr* the tap leaks. *ʔana ʃaarir ʕaraʕ* I'm dripping with perspiration. - vn *ʃarr, ʃararaan*; ava *ʃaarir, ʃaarir*.

ش ر ر [2]
شرّ *ʃarr [2]* /n/ **1** /pl *ʃuruur*/ evil, wickedness. *kaf-alla ʃ-ʃarr* may God ward off evil! *yikfii-na ʃarr il-...* may God protect us from .... *min ʏeer ʃarr* in safety, without mishap, as in *ʔin ʃa-lla kida min ʏeer ʃarr [i] tsaafir wi-tirgaʕ lina ʔawaam* God willing you will go away and come back safely. *kaafi ʏeer-u ʃarr-u* he is humble, unassuming or living modestly. *la minn(ak) wala kfaayit ʃarr-(ak)* if (you're) useless (you) needn't be positively harmful as well! *ʔif-ʃarr [i] barra wi-bʕiid* ≈ may evil be remote! *(ʔalf [i]) biʕd if-ʃarr [a] ʕaleek* (or *ʕannak*) ≈ may you be protected from evil (a thousand times over)! *xad if-ʃarr [i] w-raaḥ* ≈ never mind, it's nothing (said to one responsible for a minor accident, such as breakage, spillage etc.). **2** /in constr/ worst. *ḍarab-ni ʃarr [i] ḍarba* he hit me with the worst of blows.
شرّاني *ʃarraani* /adj */ vicious, spiteful, wicked, evil. *ʕeen ʃarraniyya* evil eye.
شرّير *ʃirriir* **1** /adj * and pl *ʔaʃraar*/ evil, villainous. *ʔarwaaḥ ʃirriira* evil spirits. **2** /n/ villain (e.g., in a story).

ش ر ر [3] see also ج ر ر
اشترّ *ʔiʃtarr* /vi/ to ruminate, chew the cud. ‖ *ʔinta bi-tʔuul ya ʃarr iʃtarr* are you trying to pick a fight? - iva *miʃtarr*.
اشترارة *ʔiʃtiraara* /n/ chewing the cud.

ش ر ر [4]
شرار *ʃaraar* /coll n/ spark(s). *ʕeen-u bi-tʃuqq [i] ʃaraar* his eyes gleam (with anger). ‖ *ʃaraar ʔalmaaz* diamond chips.
شرارة *ʃaraara* /unit n, pl *-aat*/ a spark.

(ش ر ز)
شرز *ʃarz* <Fr> /n/ *[elec]* charge. *ʔil-baṭṭariyya ma-f-haa-ʃ ʃarz* the battery is dead.
شرز *ʃirz* <Engl> /n/ jersey, sweater. - also *jirs*.
شرز *ʃiriz* /adj */ vicious. - also *ʃaris*.

ش ر س
شرس *ʃaris↑* /adj */ vicious, ferocious. *mugrim ʃaris* vicious criminal. - also *ʃiriz*.
شراسة *ʃaraasa* /n/ viciousness, ferocity.

ش ر ش [1]
شرش *ʃaraʃ (i)* **1** /vt/ to pour brine over (vegetables for pickling). **2** /vi/ to produce whey (of milk). - ava *ʃaarif*; pva *mafruuf*.
شرش *ʃirʃ [1]* /n/ **1** whey. **2** pickling-brine.
شرّاشة *ʃarraaʃa* /n pl *-aat*/ dish for whey.
اتشرش *ʔitʃaraʃ* or *ʔiʃʃaraʃ* /vi/ to be covered with brine. - iva *mitʃirif*.

ش ر ش [2]
شرش *ʃirʃ [2]* /n pl *ʃuruuf, ʃiraaf, ʃurúfa*/ bundle, bunch (e.g., of carrots, turnips or onions).
شرّش *ʃarraʃ* /vt/ to make (e.g., carrots, turnips or onions) into bundles. - vn *tafriif*; ava/pva *miʃarraʃ*.
اتشرّش *ʔitʃarraʃ* or *ʔiʃʃarraʃ* /vi/ to be made into bundles (of, e.g., carrots, turnips or onions). - iva *mitʃarraʃ*.

ش ر ش [3] see ش ر ش ى *ʃirʃi, ʃirʃaaya*

ش ر ش ب
شرشب *ʃarʃib* **1** /vt/ to fringe, put a fringe on. *ʃaal miʃarʃib* fringed shawl. **2** /vi/ to drip, trickle. *ʔid-damm [i] kaan bi-yʃarʃib mig-garḥ* blood was dripping from the wound. - vn *ʃarʃaba*; ava/pva *miʃarʃib*.
شرشوبة *ʃarʃuuba* /n pl *ʃaraʃiib*/ strand of a fringe. ‖ *ʔil-mayya nazla ʃaraʃiib ʃaraʃiib* the water is falling in an irregular trickle.
اتشرشب *ʔitʃarʃib* or *ʔiʃʃarʃib* /vi/ to be fringed. - iva *mitʃarʃib*.

ش ر ش خ see ش ر ش و ح : *farʃuuḥ*

ش ر ش خ
شرشخ *farʃax* /vi/ to grate, make a grating sound. -vn *farʃaxa*; ava *miʃarʃax*.

ش ر ش ر [1]
شرشر *ʃarʃar*[1] /vt/ to serrate. ‖*maqaṣṣ*[i] *mʃarʃar* (1) pinking shears. (2) thinning scissors. -vn *ʃarʃara*; ava/pva *miʃarʃar*.
شرشرة *ʃarʃara* /n pl *-aat, ʃaraafir*/ serrated sickle.
اتشرشر *ʔitʃarʃar* or *ʔiʃʃarʃar* /vi/ to be serrated. -iva *mitʃarʃar*.

ش ر ش ر [2]
شرشر *ʃarʃar*[2] /vi/ to drip, trickle. *ʔil-mayya ʃarʃarit min il-ḥanafiyya* the water dripped from the tap. -vn *ʃarʃara*; ava *miʃarʃar*.

ش ر ش ر [3]
شرشر *ʃarʃar*[3] /prop n/ name of a character in an elementary reading book. ‖*ṭariiqit ʃarʃar* method of teaching reading word by word, rather than alphabetically.

ش ر ش و ح
شرشوح *ʃarʃuuḥ* /adj pl *ʃarʃaaʔiḥ*/ low-class, foul-mouthed (usually of a woman). -also *ʃarduuḥ*.

ش ر ش ى
شرشى *ʃirʃi* /coll n/ pieces of plastic used in inlay work.
شرشاية *ʃirʃaaya* /unit n, pl *-aat*/ a piece of plastic used in inlay work.

ش ر ط [1]
شرط *ʃaraṭ*[1] *(u)* /vt/ to make an incision in, slit (open). *ʃaraṭ baṭn is-samaka* he slit open the belly of the fish. -vn *ʃarṭ*; ava *ʃaariṭ*; pva *maʃruuṭ*.
شرط *ʃarṭ*[1] /n pl *ʃuruuṭ*/ incision, slit, slash. *geeb-ak fii ʃarṭ* there is a slit in your pocket.
شرطة *ʃarṭa* /n/ **1** /inst n, pl *-aat*/ a slashing, a slitting. — /pl *-aat, ʃuraṭ*/ 2 incision, slash. 3a slash, oblique, shilling-stroke. *ʔutubiis bi-ʃarṭa* bus with a diagonal stroke through the route number (indicating a variation in the route). 3b hyphen.
شريط *ʃiriiṭ* /n/ **1** /pl *ʔaʃriṭa, ʃaraayiṭ, ʃirṭaan*/ tape, band, strip, ribbon. *ʃiriiṭ tasgiil* recording-tape. *ʃiriiṭ lamba* lamp wick. *ʃiriiṭ tangiid* ruffle tape (for curtains). *ʃiriiṭ (manɛ il-ḥaml)* intra-uterine device. *ʃiriiṭ liḥaam [elec]* insulating tape. 2 /pl *ʃaraayiṭ*/ stripe of rank (in the police or armed forces). 3 /pl *ʃaraayiṭ, ʃirṭaan*/ 3a track (of a railway or tramway). 3b (conveyor) belt.
شريطة *ʃiriiṭa* /n pl *ʃaraayiṭ, ʃariṭaat*/ **1** piece of ribbon. 2 stripe of rank (in the police or armed forces). *xad ʃiriiṭa* he got promoted (in the non-commissioned ranks).
شريطى *ʃiriiṭi: duud ʃiriiṭi* tape-worm(s).
شرّاط *ʃarraaṭ* /n */ cut-purse, pickpocket.
مشرط *maʃraṭ* /n pl *maʃaariṭ*/ scalpel, lancet.
اتشرط *ʔitʃaraṭ*[1] or *ʔiʃʃaraṭ*[1] /vi/ to be slit (open). -iva *mitʃiriṭ*.
انشرط *ʔinʃaraṭ* = *ʔitʃaraṭ*[1]. -iva *minʃiriṭ*.
شرّط *ʃarraṭ*[1] /vt/ to cut, slit (a number of times or in a number of places), scarify. *fis-sudaan bi-yʃarraṭu wiff-u-hum* in the Sudan they slash their faces (for tribal marking). -vn *taʃriiṭ*; ava/pva *miʃarraṭ*.

اتشرّط *ʔitʃarraṭ*[1] or *ʔiʃʃarraṭ*[1] /vi/ to be cut or slit (a number of times or in a number of places). -iva *mitʃarraṭ*.

ش ر ط [2]
شرط *ʃaraṭ*[2] *(u)* /vt/ to stipulate, demand, require. *ʃaraṭ*[i] *ɛalee ʔinnu yirgaɛ badri* I made it a condition that he come back early. -vn *ʃarṭ*; ava *ʃaariṭ*; pva *maʃruuṭ*.
شرط *ʃarṭ*[2] /n pl *ʃuruuṭ*/ condition, stipulation. *ɛala* (or *li-* or *bi-*) *ʃarṭ*[i] *ʔinn*... on condition that ....‖*miʃ ʃarṭ* not necessarily. -*ʃuruuṭ ṣiḥḥiyya* health standards. -*ʔilli ʔawwil-u ʃarṭ*[i] *ʔaxr-u nuur* (or *salaam*) *[prov]* ≈ a prior stipulation leads to a happy outcome. -*ʃarṭ*[i] *gazaaʔi* penalty clause (in a contract).
اتشرط *ʔitʃaraṭ*[2] or *ʔiʃʃaraṭ*[2] /vi/ to be stipulated, be imposed (of a condition). -iva *mitʃiriṭ*.
شرّط *ʃarraṭ*[2] = *ʃaraṭ*[2]. -ava *miʃarraṭ*.
اتشرّط *ʔitʃarraṭ*[2] or *ʔiʃʃarraṭ*[2] /vi/ to make (demanding) conditions. -iva *mitʃarraṭ*.
اشترط *ʔiʃtaraṭ* /vt/ to stipulate, demand, require. *ʔiʃtaraṭu ɛalayya ʔinni ʔasiib ʔiṭalya* they made it a condition that I leave Italy. -vn *ʔiʃtiraaṭ*; ava *miʃtiriṭ*. ¶ *yuʃtaraṭ* it is a necessary condition. *ma-yuʃtaraṭ-ʃ* not necessarily.
اشتراط *ʔiʃtiraaṭ* /n pl *-aat*/ stipulation.

ش ر ط ( ) [3]
شورط *ʃurṭ* <Engl> **1** /n pl *-aat*/ shorts, short trousers. 2 /adj invar/ short (of clothes). *ɛamiiṣ ʃurṭ* short-sleeved shirt. *banṭaloon ʃurṭ* shorts. -also *ʃurt*.
شرطة *ʃurṭa* /n/ police. *ʔiʃ-ʃurṭa l-ɛaskariyya* the Military Police.

ش ر ع

شرع *ʃaraɛ↑ (a)* /vi/ to set out, begin, undertake (to do s.th.). *ʃuruuɛ fi-ɋatl* intent to kill. -vn *ʃuruuɛ*; ava *ʃaariɛ*; pva *maʃruuɛ*.

شارع *ʃaariɛ* /n pl *ʃawaariɛ*/ street. ‖*xalla ... ʃawaariɛ* to make a mess of, as in *ʕaxalli wiff-ak ʃawaariɛ* I'll cut roads in your face! *ħa-nxalli dfaɛ-hum ʃawaariɛ* we'll make a mess of their defence!

شوارعى *ʃawarɛi* /n pl *-yya*/ street urchin.

مشروع *maʃruuɛ* /n pl *maʃariiɛ*/ project, plan.

شرع *ʃarɛ* /n/ *[Isl]* canon law. ‖*fi-ʃarɛ' miin* ≈ in whose book? says who?

شرعى *ʃarɛi* /adj/ **1** legal (particularly in terms of Islamic law). *sinn' ʃarɛi* (legal) majority. *warasa ʃarɛiyyiin* legitimate heirs. **2** pertaining to Islamic law.

شراع *ʃiraaɛ, ʃuraaɛ* /n pl *ʕiʃriɛa, ʃiríɛa*/ sail.

شراعى *ʃiraaɛi, ʃuraaɛi* /adj/ **1** pertaining to sails. ‖*ʈayyaara ʃiraɛiyya* glider. **2** pertaining to gliding.

شريعة *ʃariiɛa* /n/ *[Isl]* canon law.

شرّاعة *ʃirraaɛa* or *ʃurraaɛa* /n/ **1** window in or over a door. **2** automatic platen press.

شرّع *ʃarraɛ* /vt/ to legislate. -vn *ʈaʃriiɛ*; ava *miʃarriɛ*; pva *muʃarraɛ*.

تشريعى *ʈaʃriiɛi* /adj/ legislative, pertaining to law. *ʕiş-şulʈa t-ʈaʃriɛiyya* the legislative body.

مشرّع *muʃarriɛ* /n */ legislator.

ش ر ف

شرف *ʃaraf* /n/ honour. *ħaras ʃaraf* guard of honour. *bi-ʃaraf-ak* really? on your honour? *wi-ʃaraf-i l-amawwit-u* by my honour, I'll kill him!

شرفة *ʃarafa* /n pl *-aat*/ **1** ornamental cornice (e.g., round the roof of a mosque). **2** frieze design in tent appliqué work used on screens at the entrance to a marquee (see Pl.H, 25).

شريف *ʃariif* **1** (also *ʃiriif*) /adj pl *ʃurafa, ʕaʃraaf*/ honourable, noble, virtuous, honest. ‖*ʕil-xatma ʃ-ʃariifa* the Holy Koran. **2** /n pl *ʕaʃraaf* only/ descendant of the Prophet Muhammad.

أشرف *ʕaʃraf'* /el/ more/most honourable etc.

مشربيّة *maʃrafiyya* /n/ **1** projecting balcony enclosed by lattice-like wooden screens. **2** *[carp]* technique involving the turning of wood in certain traditional patterns resulting in a complex lattice-work effect (originally applied only to the screens of the projecting balcony - see Pl.G).

شرّف *ʃarraf* **1** /vt/ to honour (in particular with one's presence). *ma-ʈʃarraf bet-na* won't you please give us the honour of a visit! *ʃarraftuu-na* you've honoured us (formula of leave-taking uttered by the host to his guests, who respond with the formula *ʕallaah yiʃarraf miɋdaar-ak*). **2** /vi/ to bestow honour with one's presence. *ʃarraftu ʕimta* when did you arrive? - also used sarcastically, as in *ʃarraf yiʃrab ʃaay maɛaana* his High-and-Mightiness deigned to drink tea with us. - vn *ʈaʃriif*; ava *miʃarraf*.

تشريفة *ʈaʃriifa* /n pl *-aat*/ **1** *[obsol]* ceremonial dress, court-dress, full-dress (uniform). **2** guard of honour.

تشريفاتى *ʈaʃrifaati* /n pl *-yya*/ *[admin]* official responsible for receiving important visitors, master of ceremonies, chamberlain.

اتشرّف *ʕitʃarraf* or *ʕiʃʃarraf* /vi/ to be honoured. - iva *miʈʃarraf*.

تشرّف *ʈaʃarraf: ʈaʃarrafna* response to an introduction ≈ very honoured to meet you.

أشرف *ʕaʃraf²* /vi/ to have supervision, be in charge. *ħa-yibɋa muʃrif ɛala l-ɛummaal* he will be in charge of the workers. - vn *ʕiʃraaf*; ava *muʃrif*.

إشراف *ʕiʃraaf* /n/ supervision.

إشرافى *ʕiʃraafi* /adj/ supervisory.

مشرف *muʃrif* /n */ superintendent. *muʃrif ʕigtimaaɛi* social counsellor in a school.

ش ر ق [1]

شرق *ʃiriɋ, ʃaraɋ'* (a) /vi/ **1** to choke. *ɛandu ʃalal fil-balɛuum wi-law ʃirib yiʃraɋ* he has paralysis in the oesophagus and if he drinks he chokes. **2** to flood, be choked (of an engine). - vn *ʃaraɋ, ʃaraɋaan*; ava *ʃaariɋ*.

شرّق *ʃarraɋ'* **1** /vt/ to cause to choke. **2** /vi/ to be flooded, be choked (of an engine. - vn *ʈaʃriiɋ*; ava *miʃarraɋ*.

اتشرّق *ʕitʃarraɋ'* or *ʕiʃʃarraɋ'* /vi/ to be choked, be flooded (of an engine). - iva *miʈʃarraɋ*.

ش ر ق [2]

شرقان *ʃarɋaan* /adj/ parched.

شراقى *ʃaraaɋi* <Copt> /adj/ unirrigated, parched (of land).

شرّق *ʃarraɋ²* /vi/ to become parched or dry. *ʕil-ʕarḍ' ʃarraɋit* the land dried up. - vn *ʈaʃriiɋ*; ava *miʃarraɋ*.

اتشرّق *ʕitʃarraɋ²* or *ʕiʃʃarraɋ²* /vi/ to become parched or dry. - iva *miʈʃarraɋ*.

ش ر ق [3]

شرق *ʃaraɋ² (u, i)* /vi/ to rise (of the sun). - vn *ʃuruuɋ*; ava *ʃaariɋ*.

شرق *ʃarɋ* /n/ east. ‖*ʕaɋul-lak if-ʃarɋ' tɋuul il-ɤarb [prov]* ≈ you and I are always at loggerheads with one another.

شرقى *ʃarɋi* /adj */ eastern. *dirasaat ʃarɋiyya* oriental

studies. ‖*raqṣ¹ farqi* belly-dancing. -*ḥuqna farqiyya↓* enema (corruption of *faragiyya*).

الشرقيّة *ʔif-farqiyya* /prop n/ Sharqiya, province in the north-east of the Delta.

شرقاوى *farqaawi* /pl *faraqwa*/ **1** /adj/ of, or pertaining to, the province of Sharqiya. **2** /n/ one from Sharqiya.

مشرق *mafriq* /n pl *mafaariq*/ east. *ʔil-mafaariq wil-maɣaarib* the corners of the earth.

شرّق *farraq³* /vi/ to go eastward. ‖*tifarraq tiɣarrab* wherever you go, as in *tifarraq tiɣarrab laazim tidfaɛ* whatever you do or say you will have to pay. - vn *tafriiq*; ava *mifarraq*.

مستشرق *mustafriq, mustafriq* /n */ orientalist.

⁴ ش ر ق see ش ر ا ق : *firaaq*

⁵ ش ر ق see ش ر و ق : *faruuqa*

¹ ش ر ك

شرك *farak¹ (i)* /vt/ to involve. *ḥa-yifrikuu-k fit-tuhma* they will drag you into the charge (as an accomplice). - vn *farakaan*; ava *faarik*; pva *mafruuk*.

شرك *firk* /n/ **1** partnership. *ɣaar if-firk* ≈ partnership spells trouble. **2** *[Isl]* polytheism, attribution of partners to God. — /adj invar/ **3** jointly owned. *ɛimaara firk* a jointly owned apartment building.

شركة *firka* **1** /n pl *-aat, farikaat↑, firak↓*/ business, company, firm. **2** /adj invar/ shared, jointly owned.

شرك *farak²* /n pl *firaak*/ trap.

شركة *farika* /n/ **1** = *firka*. **2** community, communion. *ḥayaat if-farika* communal living.

شريك *firiik* /n pl *furaka*/ **1** partner, associate. ‖*raagil zayy if-firiik il-mixaalif* an argumentative man. - *ʔif-firiik il-mixaalif ʔixsar wi-xassar-u [prov]* cause a contrary partner to lose, even if you yourself thereby lose. **2** accomplice.

شريكة *firiika* /n pl *-aat*/ female partner. *firiikit ḥayaat-i* my wife.

اتشرك *ʔitfarak* or *ʔiffarak* /vi/ passive of *farak*. - iva *mitfirik*.

انشرك *ʔinfarak* = *ʔitfarak*. - iva *minfirik*.

شارك *faarik* **1** /vt/ to participate with. *ʔafark-ak fil-mafruuɛ* I'll join you in the project. ‖*ɛayza tfarik-ni f-ḥayaat-i* she wants to interfere in my life. **2** /vi/ to take part. *laazim nifaarik fil-maghuud da* we must participate in this effort. - vn *mifarka, mufarka*; ava *mifaarik*.

اتشارك *ʔitfaarik* or *ʔiffaarik* /vi/ **1** to take a share. *ɛaawiz yitfaarik fil-ʔataawa* he wants a share of the protection money. **2** to go into partnership (in business). **3** to be joined into partnership. - ava/iva *mitfaarik*.

أشرك *ʔafrak↑* **1** /vt/ to involve. **2** /vi/ *[Isl]* to attribute partners to God. - vn *ʔifraak*; ava *mufrik*.

إشراك *ʔifraak* /n/ *[Isl]* polytheism, attribution of partners to God.

اشترك *ʔiftarak* /vi/ **1a** to participate. **1b** to become a member. *ʔana miftirik fi-naadi g-giziira* I'm a member of the Guezira Club. **2** to become a subscriber. **3** to hold in common. *fii ḥagaat kitiir bi-yiftirku fiiha* they have a lot in common. - vn *ʔiftiraak*; ava *miftirik*; pva *muftarak*.

اشتراك *ʔiftiraak* /n pl *-aat*/ **1** participation. *bi-ftiraak maɛa* in combination with. **2** membership. **3** subscription. *ʔiftiraak il-qaṭr* season ticket for the train.

اشتراكى *ʔiftiraaki* **1** /adj */ socialist, socialistic. *ʔil-ittiḥaad l-iftiraaki* the Socialist Union. **2** /n */ person holding socialist beliefs, socialist.

الاشتراكيّة *ʔil-ʔiftirakiyya* /n/ socialism.

مشترك *muftarak* **1** /adj/ common, shared. ‖*qaasim muftarak [math]* lowest common denominator. - *ɛaamil muftarak [math]* common factor. **2** /n pl *-aat*/ **2a** *[plumb]* joint. **2b** *[elec]* multi-plug socket, adaptor. **2c** *[auto]* dual exhaust-pipe.

² ش ر ك

شرك *furuk* <T *çürük*> /adj invar/ unfit, unsound (particularly with respect to military service). *ɛarabiyya furuk* an unsound car. ‖*filuus furuk* counterfeit money.

شرّك *farrak* /vt/ **1** to render unsound or useless. **2** to reject as medically unfit for military service. - vn *tafriik*; ava/pva *mifarrak*.

اتشرّك *ʔitfarrak* or *ʔiffarrak* /vi/ passive of *farrak*. - iva *mitfarrak*.

³ ش ر ك see ش ر ى ك : *fureek, fureeka*

ش ر ك س

شركسى *farkasi* **1** /adj/ Circassian. ‖*farxa farkasi* variety of chicken characterized by a bald neck. **2** /n pl *faraksa, farkas*/ a Circassian.

شركسيّة *farkasiyya* /n/ dish of poultry cooked in a sauce containing nuts, and served with rice.

— ش ر ك س

شركسكين *farkiskiin* <Engl> /n/ shark-skin cloth.

¹ ش ر م

شرم *faram (u)* /vt/ to tear, split, slit. *faram*

ig-gallabiyya fiz-zaḫma he tore his galabiya in the crowd. - vn *farm*; ava *faarim*; pva *maſruum*.

شرم *ſarm* /n pl *ſuruum*/ inlet, bay.

أشرم *ſaſram* /adj, fem *ſarma*, pl *ſurm*/ harelipped.

اتشرم *ſitſaram* or *ſiſſaram* /vi/ to tear or be torn, split or be split. *barwiz iṣ-ṣuura ɛaſaan ma-tiſſaram-ſ* frame the picture so it won't get torn. - ava/iva *mitſirim*.

انشرم *ſinſaram* = *ſitſaram*. - ava/iva *minſirim*.

ش ر م [2]

شرم *ſurum: ſurum burum* (1) mess, chaos, as in *ſid-dunya ſurum burum* life is a sorry mess. (2) nonce phrase used in spells ≈ abracadabra.

ش ر م ط

شرمط *ſarmaṭ* /vt/ to shred, tear to shreds. - vn *ſarmaṭa*; ava/pva *miſarmaṭ*.

شرمطة *ſarmaṭa* /n/ impertinence, rudeness. *balaaſ ſarmaṭa* don't be so bloody rude.

شرموط *ſarmuuṭ* /adj pl *ſaramiiṭ*/ impertinent, rude, foul-mouthed.

شرموطة *ſarmuuṭa* /n pl *ſaramiiṭ*/ **1** cloth, rag. **2** harlot, whore. *ya-bn iſ-ſarmuuṭa* son of a whore! *ſarmuuṭa middariyya wala ḫurra mbahraga [prov]* better a modest prostitute than a tarted-up lady.

اتشرمط *ſitſarmaṭ* or *ſiſſarmaṭ* /vi/ **1** to be torn to shreds. **2** to be or become impertinent, rude or sharp-tongued. - ava/iva *mitſarmaṭ*.

ش ر ن ق

شرنق *ſarnaq* /vi/ to produce a cocoon (of silkworms). - vn *ſarnaqa*; ava *miſarnaq*.

شرنقة *ſarnaqa* /n pl *ſaraaniq*/ cocoon.

ش ر ه

شره *ſarih* /adj */ gluttonous, greedy.

شراهة *ſaraaha* /n/ gluttony, greed. *ſamma-nta ſarih ſaraaha* what a glutton you are!

ش ر و see ش ر ى : *ſarwa, ſarwa, muſtarawaat*

ش ر و ا ل see س ر و ل : *ſirwaal*

ش ر و ق see also ش و ر ق

شروقة *ſaruuqa* /n/ hot air flue between fire and baking chamber of a mud oven (see Pl.C, 11).

ش ر ى [1]

شروة *ſarwa, ſarwa* /n pl *-aat, -aat, ſiraw*/ buy, purchase, deal.

شراء، شرا *ſira* /vn/ buying, purchasing. *ſil-beeɛ wiſ-ſira* buying and selling. ‖*ſira l-ɛabd[i] wala tarbiit-u [prov]* (the cost of) buying a (trained) slave is preferable to (the trouble of) training him ≈ sometimes it's more economical to buy the finished article.

شراية *ſiraaya* /vn/ buying, purchasing.

شارى *ſaari* **1** active verbal adjective of *ſiſtara*. *ſarii-ha b-filuus-u huwwa* he has bought it with his own money. ‖*hiyya mraat-i ſaryaa-ni* do you think my wife owns me! - *ſana ſarii-k mahma ḫaṣal* no matter what happens, I'll stand by you. - *ſilli ſarii-k yixdim-ak kiwayyis* he will serve you well who values you (i.e. enough to buy you). **2** /n */ buyer, purchaser.

انشرى *ſinſara* /vi/ to be bought. - iva *minſiri*.

اتشرى *ſitſara* or *ſiſſara* = *ſinſara*. - iva *mitſiri*.

اشترى *ſiſtara* or *ſiſtara* /vt/ **1** to buy. *ſiſtareet-u b-sabɛa gneeh* I bought it for seven pounds. ‖*ſiſtiri ma-tbiɛ-ſ [prov]* ≈ learn from other's confidences, but don't give away your own. - *xalla lli ma-yiſtiri yitfarrag* to make a public spectacle (of oneself), make a scene. **2** to value dearly. *ſana ma-b-ansaa-ſ illi miſtirii-ni* I don't forget those who care for me. ‖ *ſiſtareet ſislaam-i* ≈ I behaved in a gentlemanly fashion. - ava *miſtiri, ſaari*.

مشترى *muſtari* /n */ buyer, customer.

المشترى *ſil-muſtari* /prop n/ *[astron]* Jupiter.

مشتروات *muſtarawaat* /pl n/ purchases.

مشترايات *muſtarayaat* /pl n/ purchases. *qism il-muſtarayaat* (or *ſil-muſtarawaat*) purchasing department.

ش ر ى [2]

شريان *ſuryaan*↑ or *ſiryaan*↑ /n pl *ſarayiin*/ artery.

شريانى *ſuryaani*↑ or *ſiryaani*↑ /adj/ arterial.

ش ر ى ا

شرية *ſurya* <Copt> /n pl *-aat*/ *[Chr]* censer, thurible.

ش ر ى ك

شريك *ſureek* <T *çörek*> /coll n/ type of bun.

شريكة *ſureeka* /pl *-aat*/ unit noun of *ſureek*.

ش ز ز

شذ *ſazz (i)* /vi/ to deviate, be an exception. *ſiſmiɛna ſinta tfizz[a] ɛan kull in-naas* why should it be you who are different from everybody? - vn *ſuzuuz*; ava *ſaaziz, ſaazz*↑.

شذوذ *ſuzuuz* /n/ perversion, deviation. *ſuzuuz ginsi* sexual perversion (specifically homosexuality).

شواذ *ſawaazz* /pl n/ perverts.

ش ز ل
الشاذليّة *ʃif-ʃazliyya* /prop n/ Sufi order founded by Abu l-Hasan el-Shadhili.

ش ز ل ن ج
شيزلونج *ʃizlung* or *ʃazlung* <Fr> /n pl *-aat*/ chaise-longue.

ش ز و
شذا *ʃaza* /n/ smell,-aroma, fragrance.

ش س ع
شاسع *ʃaasiɛ* /adj/ huge, vast (usually of distance). *farqⁱ ʃaasiɛ* a tremendous difference.

ش س ي ه
شاسيه *ʃaseeh* <Fr *chassis*> /n pl *-aat*/ **1** chassis, frame. *bi-nisḥab il-mutoor min iʃ-ʃaseeh* we strip the motor from the frame. **2** *[phot]* wooden film-cassette (for a studio camera).

ش ش خ ن
ششخن *ʃaʃxan* <P *shash-khâna*> /vt/ to rifle (a gun barrel). - vn *ʃaʃxana*; ava/pva *miʃaʃxan*.
اتشخن *ʔitʃaʃxan* or *ʔiʃʃaʃxan* /vi/ passive of *ʃaʃxan*. - iva *mitʃaʃxan*.

ش ش ف ي see ش ف ي : *muʃtaffa, miʃtaffa*

(ش ش م)
ششم *ʃiʃm* <P *chashm*> /n/ Indian liquorice (Abrus precatorius), a shrub bearing seeds which are powdered and were formerly used as a medicine for inflamed eyes. ‖*ḥuṭṭⁱ f-ɛeen-ak ʃiwayyit ʃiʃm* have some consideration.
ششمة *ʃiʃma* <T *çişme*> /n/ *[rur]* outhouse, outside lavatory.

ش ش ن
ششنى *ʃiʃni* <T *çeşni*> /n/ random checking, sampling. *ɛamal ʃiʃni ɛala ʃuɣl-i-na* he spot-checked our work.
ششنجى *ʃiʃingi* /n pl *-yya*/ *[obsol]* appraiser, assayer.

ش ش ي
شاشى *ʃaaʃa²* /vi/ to flutter, wave in the wind. ‖*ɢalb-i bi-yʃaaʃi ɛalee* I have a longing for it. - vn *miʃaʃiyya*; ava *miʃaaʃi*.

ش ض ب
شضب *ʃaḍḍab* /vt/ to lacerate, slash. *ʃaḍḍabuu-lu wiʃʃ-u* they cut his face about. - vn *taʃḍiib*; ava/pva *miʃaḍḍab*.
اتشضب *ʔitʃaḍḍab* or *ʔiʃʃaḍḍab* /vi/ to be lacerated, be slashed. - iva *mitʃaḍḍab*.

ش ض ل
شضلى *ʃuḍali* /n pl *-yya*/ quarrelsome or fractious person, bully.

ش ض ى see also ش ظ ى
شظية *ʃaḍya* (also *ʃaṭya*) /n pl *-aat, ʃuḍay*/ splinter, sliver.

ش ط ب
شطب *ʃaṭab (u)* /vt/ to cross off, strike out, cancel. *ʃuʃṭub ism-i min il-ɢayma* cross my name off the list. - vn *ʃaṭb*; ava *ʃaaṭib*; pva *maʃṭuub*.
شطب *ʃaṭb* /n/ *[comm]* control of payment. *ɢism iʃ-ʃaṭb* or *ɢalam iʃ-ʃaṭb* Control of Settlement section.
اتشطب *ʔitʃaṭab* or *ʔiʃʃaṭab* /vi/ to be crossed off, be struck out, be cancelled. - iva *mitʃiṭib*.
انشطب *ʔinʃaṭab* = *ʔitʃaṭab*. - iva *minʃiṭib*.
شطّب *ʃaṭṭab* /vt/ **1** to finish off, finish work on. *ʃaṭṭabi l-maṭbax ɢabl[i] ma timʃi* tidy up the kitchen before you go! *ʃaaḍil taʃṭiib il-mawaɛiin bass* all that remains is to clear away the pots and pans. **2** *[constr]* to fit out, put the finishing touches to (a building). *mistaniyyiin ɛal-ɢifaani wil-ʔadawaat bitaaɛit il-ḥammaam ɛaʃaan niʃaṭṭab il-beet* we're waiting for the tiles and the bathroom fixtures so we can put the finishing touches to the house. **3** to cross off repeatedly. *ʃaṭṭab il-maqaala kull-a-ha* he blue-pencilled the article down to practically nothing. ‖*ɢarabt-u ʃaṭṭabt-i-lu wiʃʃ-u* I beat his face to pulp. — /vi/ **4** to finish work, knock off, shut up shop. *ʃaṭṭabtu walla mumkin ʔaṭlub ɛaṣiir lamuun* are you closing or may I order a lemonade? - vn *taʃṭiib*; ava/pva *miʃaṭṭab*.
¶ *ʃaṭṭab ɛala* to dispose of thoroughly. *ʃaṭṭab ɛal-ʔakl* he polished off the food. *ʃaṭṭab ɛal-filuus* he spent the money to the last penny. ‖*ʃaṭṭabu ɛal-ɢahwa* they wrecked the café (causing it to close).
تشطيب *taʃṭiib* /n pl *-aat, taʃaṭiib*/ *[constr]* finish, finishing touch.
اتشطّب *ʔitʃaṭṭab* or *ʔiʃʃaṭṭab* /vi/ passive of *ʃaṭṭab*. - iva *mitʃaṭṭab*.

ش ط ب ي
الشاطبى *ʔiʃ-ʃaṭbi* /prop n/ beach and district in the eastern part of Alexandria.

ش ط ح
شطح *ʃaṭaḥ (a)* /vi/ to veer, go off course. *xayaal-i ʃaṭaḥ*

my thoughts strayed. ‖ *ʃik-kamangaati raaḥ ʃaaṭiḥ* the violinist went screeching out of tune. - *ʃawwil ma yiʃṭaḥ yinṭaḥ* ≈ as soon as he takes a course (of action) he goes (too) far. - vn *ʃaṭḥ, ʃaṭaḥaan*; ava *ʃaaṭiḥ*.

[1] ش ط ر

شطر *ʃaṭar (a)* /vt/ to cut in half, bisect. - vn *ʃaṭr*; ava *ʃaaṭir*; pva *maʃṭuur*.

شطر *ʃaṭr* /n pl *ʃuṭuur, ʃaʃṭur*/ **1** half part. **2** hemistich.

شطرة *ʃaṭra* = *ʃaṭr*.

شطارة *ʃaṭaara* /n/ cleverness, skill, smartness. ‖ *ʃig-gary[i] nuṣṣ iʃ-ʃaṭaara [prov]* ≈ valour would fight, but discretion would run away.

شاطر *ʃaaṭir[1]* /adj * and pl *ʃuṭṭaar*/ clever, smart, skilful. *ʃiʃ-ʃaṭra tixzil bi-rigl[i] ḥmaar [prov]* a clever woman can spin (even) with a donkey's leg. ‖ *ma-yṭubb[i] ʃilla ʃ-ʃaaṭir* ≈ it happens to the best of us (phrase said to give consolation in misfortune). - *ya ʃaaṭir* form of address to a child.

أشطر *ʔaʃṭar* /el/ more/most clever, more/most skilful. ‖ *kaan xeer-ak ʔaʃṭar* ≈ what makes you think you can do it (when others cleverer than you have failed)?

شطّورة *ʃaṭṭuura* /n/ smart kid.

اتشطر *ʔitʃaṭar* or *ʔiʃʃaṭar* /vi/ **1** to be cut in two, be bisected. **2** to split, divide. - ava/iva *mitʃiṭir*.

انشطر *ʔinʃaṭar* = *ʔitʃaṭar*. - vn *ʔinʃiṭaar*; iva/ava *minʃiṭir*.

اتشطّر *ʔitʃaṭṭar* or *ʔiʃʃaṭṭar* /vi/ **1** to try to outwit, try to take advantage. *ma-titʃaṭṭar ɛala lli ɋadd-ak* pick on somebody your own size! **2a** to try to be clever. *ʔiyyaa-k baɋa tiʃʃaṭṭar fi-drast-ak* I hope, then, you'll try to do better in your studies. ‖ *ʔik-kalb[i] ma-yiʃʃaṭṭar-ʃ[i] ʔilla ɛala baab daar-u [prov]* ≈ every dog is a lion at home. **2b** to become clever. - ava *mitʃaṭṭar*.

شاطر *ʃaaṭir[2]* /vt/ to share with. *niʃaṭir-kum il-ʔaḥzaan* we share your grief (phrase of condolence used in telegrams). - vn *muʃaṭra*.

[2] ش ط ر

شاطور *ʃaṭuur* /n pl *ʃawaṭiir*/ meat cleaver. - also *saṭuur*.

ش ط ر ن ج

شطرنج *ʃaṭrang, ʃaṭarang* /n/ chess.

[1] ش ط ط

شطّ *ʃaṭṭ[1] (u)* **1** /vt/ to strike (a match). *ʃaṭṭeet ɛuud kibriit* I struck a match. **2** /vi/ to strike off course, veer away. *ɛaɋl-u bi-yʃuṭṭ* his mind wanders. ‖ *ʔinta bi-tfuṭṭ[i] fil-kalaam* (1) you're indiscreet in what you say. (2) you're getting off the subject. - vn *ʃaṭaṭaan*; ava *ʃaaṭiṭ*; pva *maʃṭuuṭ*.

شطّاطة *ʃaṭṭaaṭa* /n pl *-aat*/ striking surface for matches. *ʃaṭṭaaṭit miʃṭ* striking surface of a book of matches.

اتشطّ *ʔitʃaṭṭ* or *ʔiʃʃaṭṭ* /vi/ to be struck (of matches). - iva *mitʃaṭṭ*.

[2] ش ط ط

شطّة *ʃaṭṭa* /n/ chili pepper (Capsicum conicum).

شطيطة *ʃiṭeeṭa* /n/ **1** hot peppery sauce. **2** bird pepper (Capsicum frutescens).

[3] (ش ط ط)

شطّ *ʃaṭṭ[2]* /n pl *ʃuṭuuṭ*/ bank, shore. ‖ *lissa ɛala ʃ-ʃaṭṭ* ≈ still untried, not yet exposed to any stress.

شطّ *ʃaṭṭ[3]: ʃaṭṭ[a] ɛarabaan [mus]* mode in Arabic music beginning on G and having A flat, E flat, and F sharp.

[1] ش ط ف

شطف *ʃaṭaf[1] (u)* /vt/ to rinse, rinse off. *ʃaṭafit il-ɤasiil* she rinsed the laundry. - vn *ʃaṭf, ʃaṭafaan*; ava *ʃaaṭif*; pva *maʃṭuuf*.

شطّافة *ʃaṭṭaafa* /n pl *-aat*/ bidet attachment in a lavatory bowl.

اتشطف *ʔitʃaṭaf[1]* or *ʔiʃʃaṭaf[1]* /vi/ to be rinsed. - iva *mitʃiṭif*.

انشطف *ʔinʃaṭaf* = *ʔitʃaṭaf*. - iva *minʃiṭif*.

شطّف *ʃaṭṭaf* /vt/ to rinse off, rinse (a number of things, or a number of times). - vn *taʃṭiif*; ava/pva *miʃaṭṭaf*.

اتشطّف *ʔitʃaṭṭaf* or *ʔiʃʃaṭṭaf* /vi/ to rinse oneself off or be rinsed. - ava/iva *mitʃaṭṭaf*.

[2] ش ط ف

شطف *ʃaṭaf[2] (u)* /vt/ **1** *[carp, metal]* to bevel, make a chamfer on. ‖ *tawṣiil bi-ʃaff* scarfing. **2** to chip. - vn *ʃaṭf, ʃaṭafaan*; ava *ʃaaṭif*; pva *maʃṭuuf*.

شطف *ʃaṭf* /n pl *-aat*/ **1** *[carp, metal]* chamfer, bevel, bevelled edge. **2** chip.

شطفة *ʃaṭfa* /n pl *ʃuṭaf*/ chip.

شطفيّة *ʃaṭfiyya* = *ʃaṭfa*.

اتشطف *ʔitʃaṭaf[2]* or *ʔiʃʃaṭaf[2]* /vi/ **1** *[carp, metal]* to be bevelled. **2** to be chipped. - iva *mitʃiṭif*.

ش ط ن see ش ى ط ن : *ʃiṭaan, ʃiṭaani*

ش ط ى see ش ض ى : *ʃaṭya*

ش ظ ى see also ش ض ى

شظية *ʃaẓya* /n pl *ʃaẓaaya*/ piece of shrapnel.

شظيّة *ʃaẓiyya* = *ʃaẓya*.

ش ع ب [1]

شعب *ʃaɛb* /n pl *ʃuɛuub*/ **1** people, populace. *ʃif-ʃaɛb il-maṣri* the Egyptian people. **2** *[Chr]* congregation.

شعبى *ʃaɛbi*[1] /adj */ **1** folk, traditional. *ʃaɤaani ʃaɛbiyya* folk songs. **2** popular, of the mass of people. *masaakin ʃaɛbiyya* (government-subsidized) low-income housing developments. *lu nufuuz ʃaɛbi* he has grass-roots' support. *ɋumaaʃ ʃaɛbi* cheap cloth for popular consumption.

شعبى *ʃaɛbi*[2]*: nazla ʃaɛbiyya [path]* bronchitis.

شعبيّة *ʃaɛbiyya* /n/ popularity.

شعبة *ʃuɛba* /n pl *ʃuɛab*/ **1** division (e.g., in the police). **2** *[acad]* **2a** unit within which university departments are grouped (e.g., College of Science, Division of Arts). **2b** section, division of a large class. **3** *[anat]* bronchiole.

شعبة *ʃiɛba* /n pl *ʃiɛab*/ **1** *[rur]* forked stick (used, e.g., as a shepherd's crook, or as a prop for the axis of an Archimedes' screw, or, fixed in an upright position, as a peg on which clothes, food, etc. may be hung; see, e.g., Pl.D, 3). **2** (coral) reef.

شعّب *ʃaɛɛab* /vt/ to split, divide. - vn *taʃɛiib*; ava/pva *miʃaɛɛab*.

اتشعّب *ʔitʃaɛɛab* or *ʔiʃʃaɛɛab* /vi/ **1** to be split, be divided. **2** to branch off or out. *ʔiṭ-ṭariiɋ bi-yitʃaɛɛab hinaak* the road divides there. - ava/iva *mitʃaɛɛab*.

ش ع ب [2]

شعبان *ʃaɛbaan* /n/ Shaban, the eighth month of the Muslim year.

ش ع ب ط

شعبط *ʃaɛbaṭ* /vt/ to cause to cling. *da-nta lli ʃaɛbaṭt il-waad fiyya* you're the one who made the boy cling to my coat tails! - vn *ʃaɛbaṭa*; ava/pva *miʃaɛbaṭ*.

شعبيط *ʃuɛbeeṭ* /coll n/ a variety of nettle.

اتشعبط *ʔitʃaɛaṭ* or *ʔiʃʃaɛbaṭ* /vi/ to cling, hang on. *ʔitʃaɛbaṭ fi-ʔumm-u* he clung to his mother. *mitʃaɛbaṭ fil-ʔutubiis* hanging on to the bus. ‖*mitʃaɛbaṭ ɛala l-ḥibaal id-dayba [prov]* clinging to frayed ropes. - ava *mitʃaɛbaṭ*.

ش ع ر [1]

شعر *ʃaɛar (u)* /vi/ **1** to have a feeling, experience a sensation. *ɛaayiz yuʃɛur ʔinnu muhimm* he wants to feel that he's important. *mitlamm*[i] *ɛala baɛḍ-u tɋul-f*[i] *ʃaaɛir bi-bard* he's all curled up, you'd think he feels cold. **2** *[abus]* to spread malicious rumours. - vn *ʃuɛuur*; ava *ʃaaɛir*.

شعور *ʃuɛuur*[1] /n/ feeling, sensation. *ma-ɛanduu-ʃ ʃuɛuur* he has no feeling, he's thick-skinned. ‖*ʃuɛuur murhaf* sensitivity.

¶ *ʔil-laaʃuɛuur* /n/ the subconscious mind.

شعورى *ʃuɛuuri* /adj */ pertaining to feeling, sensate, sensational.

¶ *laaʃuɛuuri* /adj */ involuntary, unconscious, subconscious. *ḥaraka laʃuɛuriyya* an involuntary or unconscious movement.

شاعر *ʃaaɛir* /n pl *ʃuɛara*/ poet. ‖*ʃaaɛir ir-rabaaba* a folk entertainer, usually in coffee-houses. - *bi-yiḥki zayy iʃ-ʃaaɛir* he keeps repeating himself like a gramophone record.

شاعرى *ʃaaɛiri* /adj */ poetic.

شعر *ʃiɛr* /n pl *ʔaʃɛaar*/ poetry, poetic composition.

شعرى *ʃiɛri* /adj */ poetic.

أشعر *ʔaʃɛar*[1] /el/ more/most poetic.

شعار *ʃiɛaar* /n pl *-aat*/ **1a** slogan. **1b** emblem, **2** (trade-) mark.

مشاعر *maʃaaɛir* /pl n/ feelings, sensations. *ḥaaga massit maʃaɛr-u* something which touched his feelings.

مشعور *maʃɛuur* /adj */ touched, crazy.

شعّر *ʃaɛɛar*[1] /vt/ to cause to have a sensation or feeling, make aware. *ʃaɛɛar-ni bi-htimaam-u* he made me sense his concern. - vn *taʃɛiir*; ava/pva *miʃaɛɛar*.

اتشعّر *ʔitʃaɛɛar*[2] or *ʔiʃʃaɛɛar*[2] /vi/ passive of *ʃaɛɛar*[1]. - iva *mitʃaɛɛar*.

أشعر *ʔaʃɛar*[2] /vt/ **1** to cause to feel. *ʔaʃɛart-u ʔinn*[i] *ʔana mabsuuṭ* I made him feel that I was happy. **2** to notify, inform. - vn *ʔiʃɛaar*; ava *muʃɛir*.

إشعار *ʔiʃɛaar* /n pl *-aat*/ notification, notice (e.g., bank statement).

استشعر *ʔistaʃɛar* /vt/ to experience the sensation of. *ʔistaʃɛart id-diiɋ* I felt depressed. ‖*ɋuruun istiʃɛaar* (insects') feelers, antennae. - vn *ʔistiʃɛaar*; ava *mistaʃɛar*.

ش ع ر [2]

شعر *ʃaɛr* /coll n, pl *ʃuɛuur*/ **1** hair(s). ‖*maʃya ɛala ḥall*[i] *ʃaɛr-a-ha* she's a loose woman. - *ʔumm iʃ-ʃuɛuur* (1) an evil female demon. (2) weeping willow (Salix babylonica). **2** hair-like substance. ‖*silk*[i] *ʃaɛr* multi-core wire. *-ʃaɛr*[i] *ɋalfaṭa* oakum. *-ɋuṭn*[i] *ʃaɛr* raw unprocessed cotton.

شعرة *ʃaɛra* /n pl *-aat*/ **1** /unit n/ a hair. ‖*ɛandu ʃaɛra* he's cuckoo. - *ṭiliɛ minha zayy iʃ-ʃaɛra min il-ɛagiin* he emerged from it with not a hair out of place, he wriggled out of it cleverly. *-ʃaɛra min daɋn il-xanziir maksab [prov]* ≈ (even) one hair from a miser is profit. **2** any of a range of hair-like objects (e.g., a filament, a slub, a lubber line). **3** a bit, a pinch. *ʃaɛrit malḥ* a pinch of salt. **4** *[path]* trichiasis.

شعراية *ʃaɛraaya* /n pl *-aat*/ a hair.
الشعريّة *ʔiʃ-ʃaɛriyya: baab iʃ-ʃaɛriyya* area of central Cairo near the old wall.
شعرة *ʃiɛra* /coll n/ pubic hair.
شعريّة *ʃiɛriyya* /n/ vermicelli.
شعير *ʃiɛiir* /coll n/ **1** barley. *ʃiɛir-na wala ɣamḥ[i] ɣar-na [prov]* better our own barley than another's wheat. ‖*ḥabbit ʃiɛiir* linear measure equal to 0.521 centimetres. - *ruzz[i] ʃɛiir* unhulled rice. **2** barley water.
شعيرة *ʃiɛiira* **1** /unit n, pl *-aat*/ a kernel of barley. **2** /n pl *ʃaɛaayir*/ diamond-shaped piece of mother-of-pearl used in inlay work.
شعيرة *ʃuɛayra↑* /n pl *-aat*/ **1** filament. **2** capillary.
مشعر *miʃɛir* /adj */ hairy, hirsute.
مشعراني *miʃɛaraani↓* /adj */ hairy, hirsute.
شعّر *ʃaɛɛar²* /vt/ **1** to separate into strands or filaments. **2** to remove the hair from (in tanning). - vn *taʃɛiir*; ava/pva *miʃaɛɛar*.
اتشعّر *ʔitʃaɛɛar²* or *ʔiʃʃaɛɛar²* /vi/ passive of *ʃaɛɛar²*. - iva *mitʃaɛɛar*.

ش ع ر [3] see ش ع و ر: *ʃuɛuur²*

ش ع ش ع
شعشع *ʃaɛʃaɛ* **1** /vt/ to brighten, cause to glow. *ʔil-wiski ʃaɛʃaɛ nafuux-i* the whisky set my head glowing. **2** /vi/ **2a** to become bright, glow. **2b** to reach one's best level, shine (of a performer). - vn *ʃaɛʃaɛa*; ava/pva *miʃaɛʃaɛ*.
اتشعشع *ʔitʃaɛʃaɛ* or *ʔiʃʃaɛʃaɛ* /vi/ **1** to become bright, glow. **2** to be made bright, be made to glow. - ava/iva *mitʃaɛʃaɛ*.

ش ع ط
شعط *ʃaɛaṭ (a)* /vt/ to burn, sting (of pepper). *ʔil-filfil ʃaɛaṭ lisaan-i* the pepper burned my tongue. - vn *ʃaɛaṭaan, ʃaɛṭ*; ava *ʃaaɛiṭ*; pva *maʃɛuuṭ*.
اتشعط *ʔitʃaɛaṭ* or *ʔiʃʃaɛaṭ* /vi/ passive of *ʃaɛaṭ*. - iva *mitʃiɛiṭ*.
انشعط *ʔinʃaɛaṭ* = *ʔitʃaɛaṭ*. - iva *minʃiɛiṭ*.

ش ع ع
شعّ *ʃaɛɛ (i)* **1** /vt/ to beam, radiate. *ʔil-bint[i] kaanit bi-tʃiɛɛ[i] saɛaada* the girl radiated happiness. **2** /vi/ to beam, radiate, be radiated, be diffused. *ʔis-saɛaada kaanit bi-tʃiɛɛ[i] min ɛenee* happiness was radiating from his eyes. - vn *ʃaɛɛ, ʃaɛaɛaan, ʔiʃɛaaɛ*; ava *ʃaaɛiɛ*.
شعاع *ʃuɛaaɛ* /n/ **1** /pl *ʔaʃiɛɛa*/ ray, beam. *ʃuɛaaɛ iʃ-ʃams* sunbeam. **2** /pl *ʃuɛaɛaat*/ fanlight. *ʃuɛaaɛ il-baab* a small vent located over a door.
أشعّة *ʔaʃiɛɛa* /n pl *-aat*/ x-ray, x-ray photograph.
أشاعّة *ʔuʃaaɛa↓* = *ʔaʃiɛɛa*.
إشعاع *ʔiʃɛaaɛ* /n pl *-aat*/ radiation, radioactivity. *ʔiʃɛaaɛ zarri* atomic radiation.
مشعّ *muʃiɛɛ* /adj/ **1** radiating, emitting. **2** radioactive. *naẓaaʔir muʃiɛɛa* radioactive isotopes.

ش ع ف
شعف *ʃaɛaf (i)* /vt/ **1** to inflame with passion. *ʔil-bint[i] ʃaɛafit-u* the girl set his heart on fire. **2** to hurry, rush. *ma-tiʃɛif-nii-ʃ kida* don't rush me! - vn *ʃaɛafaan, ʃaɛf*; ava *ʃaaɛif*; pva *maʃɛuuf*.
اتشعف *ʔitʃaɛaf* or *ʔiʃʃaɛaf* /vi/ passive of *ʃaɛaf*. - iva *mitʃiɛif*.
انشعف *ʔinʃaɛaf* = *ʔitʃaɛaf*. - iva *minʃiɛif*.

ش ع ل
شعل *ʃaɛal (i)* /vt/ to light, kindle. ‖*ʃaɛalnaa-ha naar ɛala l-ʔingiliiz* we made things hot for the British. - ava *ʃaaɛil*.
شعلة *ʃuɛla, ʃiɛla* /n pl *-aat, ʃuɛal*/ **1** flame. ‖*walad ʃiɛla* a very bright boy. **2** (flaming) torch.
أشعل *ʔaʃɛal[1]* /adj; fem *ʃaɛla* pl *ʃuɛl*/ **1** (of people) blondish, fair. **2** (of animals) light grey.
أشعل *ʔaʃɛal²↑* = *ʃaɛal*. - vn *ʔiʃɛaal*; ava *muʃɛil*.
إشعال *ʔiʃɛaal↑* /n/ kindling, igniting, ignition.
اشتعل *ʔiʃtaɛal↑* /vi/ to catch fire, ignite. *ɣaabil lil-iʃtiɛaal* flammable. *sariiɛ l-iʃtiɛaal* highly flammable. - vn *ʔiʃtiɛaal*; ava *muʃtaɛil*.

ش ع ل ق
شعلق *ʃaɛlaɣ* /vt/ **1** to string up, hang up. *ʔig-gazzaar ʃaɛlaɣ il-xaruuf* the butcher strung up the sheep. **2** to ensnare. *huwwa miʃ ɛaawiz yitgawwiz bass[i] ʔana lli ḥ-aʃaɛlaɣ-u* he doesn't want to get married but I'm the one who will hook him. - vn *ʃaɛlaɣa*; ava/pva *miʃaɛlaɣ*.
اتشعلق *ʔitʃaɛlaɣ* or *ʔiʃʃaɛlaɣ* /vi/ **1** to cling, hang on. *kunt[a] ḥ-aɣaɛ ɛas-sillim fa-tʃaɛlaɣt[i] fid-darabziin* I was about to fall down the stairs so I clung to the banister. **2** to be hung up, be strung up. ‖*ʔitʃaɛlaɣ min deel(-u)* to try to keep up with the Joneses. **3** to get hooked, become strongly attached. *ʔiʃʃaɛlaɣ fit-tadxiin* he got hooked on smoking. *ʔiʃʃaɛlaɣt[i] fiiha* I fell for her, hook, line and sinker. -ava/iva *mitʃaɛlaɣ*.

ش ع ل ل
شعلل *ʃaɛlil* /vt/ to kindle, cause to flare up. *ʔil-furaaɣ bi-yʃaɛlil il-ḥubb* absence makes the heart grow fonder. *ʔil-maṣaaliḥ illi bi-tʃaɛlil ḥuruub* the interests which spark off wars. ‖ *ʔalwaan miʃaɛlila* bright colours. - vn *ʃaɛlala*; ava/pva *miʃaɛlil*.

شعليلة *ʃuʕleela* /n pl *ʃaʕaliil/* **1** fire, blaze. ‖*walad ʃuʕleela* a fire-brand of a boy. **2** tense or troubled situation.
اتشعلل *ʔitʃaʕlil* or *ʔiʃʃaʕlil* /vi/ **1** to be kindled. **2** to flare up, blaze. - ava/iva *mitʃaʕlil*.

ش ع ن و ن
شعنونة *ʃaʕnuuna* /n pl *ʃaʕaniin/* **1** spitfire, woman given to flaring up at the slightest provocation. **2** epithet for the second henna crop.

ش ع ن ى ن
شعانين *ʃaʕaniin: ʕiid* (or *ħadd) if-ʃaʕaniin [Chr]* Palm Sunday.

ش ع و ر
شعور *ʃuʕuur*[2] /coll n/ Letherinus nebulasis, a Red Sea fish.

ش ع و ز
شعوذ *ʃaʕwiz* **1**↑ /vi/ to practise magic or witchcraft. **2** /vt/ to bamboozle. - vn *ʃaʕwaza*; ava *muʃaʕwiz*; pva *muʃaʕwaz*.
مشعوذ *muʃaʕwiz* /n */ **1**↑ sorcerer. **2** bamboozler.

ش ع و ط
شعوط *ʃaʕwaṭ* /vt/ to scorch, burn. ‖*ʔil-ħubb*[i] *ʃaʕwaṭ ʔalb-i* love has afflicted my heart. - vn *ʃaʕwaṭa*; ava/pva *miʃaʕwaṭ*.
اتشعوط *ʔitʃaʕwaṭ* or *ʔiʃʃaʕwaṭ* /vi/ to be scorched, be burned. - iva *mitʃaʕwaṭ*.

ش غ ب
شغب *ʃaɣab* /n/ disturbance, trouble, disorder.
شاغب *ʃaaɣib* **1** /vt/ to make trouble with, be troublesome with. *bi-tʃaɣib-ha leeh* why are you stirring up trouble with her? **2** /vi/ to create a disturbance, cause an uproar. - vn *miʃaɣba*; ava *miʃaaɣib*.
مشاغب *muʃaaɣib* /n */ trouble-maker, agitator.

ش غ ت
شغت *ʃaɣat* /coll n/ white muscle-sheathing gristle.
شغتة *ʃaɣata* /unit n, pl *-aat/* a piece of gristle.
شغتاية *ʃaɣataaya = ʃaɣata.*
مشغّت *miʃaɣɣat* /adj/ having inedible tough parts, gristly (of meat).
مشغت *miʃɣit = miʃaɣɣat. ʔaalu leeh liħmit-ak miʃɣita - ʔaal ig-gazzaar miʕrifa [prov]* ≈ business and friendship don't go together.

ش غ ف
شغف *ʃaɣaf* /n/ zeal, eagerness, passion. *ʕandu ʃaɣaf bil-ʔiraaya* he is an avid reader. ‖*bi-ʃaɣaf* out of real love, as in *ʕamal if-fuɣl*[i] *da bi-ʃaɣaf* he did this work out of real love for it.
شغوف *ʃaɣuuf*↑ /adj */ dedicated (to one's work).
مشغوف *maʃɣuuf* /adj */ passionate, engrossed. *huwwa maʃɣuuf bis-siyaasa* he's completely taken up with politics.

ش غ ل
شغل *ʃaɣal*[1] *(a)* /vt/ to occupy (a position etc.). *bi-yiʃɣal waẓiifit il-mudiir* he holds the position of director. - vn *ʃaɣl*; ava *ʃaaɣil*; pva *maʃɣuul*.
شغل *ʃaɣal*[2] *(i)* /vt/ **1** to engage, occupy, keep busy. *ʃaɣalt*[i] *nafs-i bil-gineena* I kept myself busy with the garden. *ma-tiʃɣil-ʃ*[i] *baal-ak bil-ħikaaya di* don't give any thought to this matter. ‖*hiyya ʃaɣla ʔalb-i* ≈ she has captured my heart. - *baal-i maʃɣuul ʕaleek* I'm worried about you. **2** to fill, occupy. *kull il-ʔuwaʔ maʃɣuula* all the rooms are occupied. *ʔin-nimra maʃɣuula* the number's engaged. **3** to work (fabric, metal etc.). *maʃɣuul ḅil-ʔaṣab* worked with gold thread. - vn *ʃaɣalaan, ʃaɣl*; ava *ʃaaɣil*; pva *maʃɣuul*.
مشغولات *maʃɣulaat* /pl n/ artifacts.
مشغوليّة *maʃɣuliyya* /n pl *-aat/* **1** matter requiring attention. **2** preoccupation.
شغل *fuɣl* /n pl *ʔaʃɣaal/* **1** work. *ħ-axallaṣ iʃ-fuɣl*[i] *da bukra* I'll finish this work tomorrow. *laʔeet fuɣl*[a] *ʕand il-gazzaar* I found work at the butcher's. ‖*da miʃ fuɣl-ak* that's not your business. - *ʃuuf fuɣl-ak* mind your own business! - *ʔaʃɣaal ʃaaʔʔa [leg]* hard labour: **2** work, handicraft. *fuɣl*[i] *ʔibra* needlework. *fuɣl*[i] *yadd* handmade product. *fuɣl*[i] *xaʃab bi-dahab* wood with gold inlay. *fuɣl*[i] *makana* machine-manufactured product. *ʔaʃɣaal maħalliyya* local handicrafts. — /no pl/ **3** (devious) business, (underhand) doings. *baṭṭal iʃ-fuɣl*[i] *btaaʕ-ak da* stop being so devious. ‖*fuɣl it-talat waraʔaat* or *fuɣl in-naṣb* fraud, swindle.
شغلة *fuɣla* /n pl *-aat/* **1** job, task, function. *fuɣlit-u ʔinnu yṭabbil ṭuul in-nahaar* his job is to beat the drum all day long. *ma-tdawwar ʕala fuɣla* look for a job! **2** problem, hassle.
شغلانة *fuɣlaana = fuɣla.*
شغّال *ʃaɣɣaal* **1** /n pl *-iin, ʃaɣɣaala/* manservant, worker. **2** /adj */ **2a** working, functioning. *huwwa ʃaɣɣaal gizamaati* he works as a shoemaker. *ʔil-makana ʃaɣɣaala* the machine is working. **2b** active, hard-working. *raagil gadd*[i] *w-ʃaɣɣaal* a serious and hard-working man. **2c** in working order.

شغّالة *ʃayyaala* /n pl *-aat*/ female servant, maid.
شغّيل *ʃayyiil* /n pl *ʃayyiila*/ worker, labourer.
مشغل *maʃyal* /n/ workshop (for handicrafts).
مشغلة *maʃyala: ʃuɣla w-maʃyala* fuss and bother. *la ʃuɣla wala maʃyala* nothing to do.
مشاغل *maʃaayil* /pl n/ **1** matters requiring attention, things to attend to. **2** preoccupations, distractions.
اتشغل *ʔitʃayyal* or *ʔiʃʃayyal* /vi/ **1** to keep busy, occupy oneself. ‖ *ʔitʃayyal bi-duruus-u* he was busy with his studies. *ʔil-fuqara b-yitʃiɣlu bil-gary[i] wara luqmit-hum* the poor are preoccupied with making a living. **2** to be worked (of fabric, metal etc.). **3** to be worried, be concerned, feel uneasy. - ava/iva *mitʃiɣil*.
انشغل *ʔinʃayyal* = *ʔitʃayyal*. - vn *ʔinʃiɣaal*; ava *minʃiɣil*.
شغّل *ʃayyal* /vt/ **1** to employ. *bi-tʃayyal in-niswaan li-ḥsab-ha* she employs the women to work for her. *kaan bi-yʃayyal il-ɛarabiyya f-mafawiir xuṣuṣiyya* he used the car for private errands. **2** to operate, work. *bi-yʃayyal il-makana* he operates the machine. *ʃayyalt[i] ʔisṭuwaana* I put on a record. - vn *taʃyiil*; ava/pva *miʃayyal*.
اتشغّل *ʔitʃayyal* or *ʔiʃʃayyal* /vi/ **1** to be employed. **2** to be operated, be put into operation. - iva *mitʃayyal*.
شاغل *ʃaayil* /vt/ to try to attract the attention of (s.o., e.g., in a flirtatious manner). - vn *miʃayla*; ava *miʃaayil*.
اتشاغل *ʔitʃaayil* or *ʔiʃʃaayil* /vi/ passive of *ʃaayil*. - iva *mitʃaayil*.
اشتغل *ʔiʃtayal (yiʃtayal)* /vi/ **1** to function, operate, work. *bi-yiʃtayal sawwaaq* he works as a driver. *huwwa miʃtiɣil fil-muxaddaraat* he deals in drugs. *qaɛad yiʃtayal ɛal-ɛuud* he sat playing the lute. ‖ *ḥ-aʃtayal ɛalee - yimkin yixayyar raʔy-u* I'll work on him - maybe he'll change his mind. - *ḥa-tiʃtayal ɛala miin* who are you trying to deceive! who do you think you're kidding? **2** to act, take hold, take effect. *ʔiʃ-ʃarba ʃtayalit* the laxative started working. *ʔil-muẓahraat iʃtayalit taani* the demonstrations have started up again. — /vt/ **3** to work (fabric, metal etc. with a pattern, embroidery, inlay etc.). *ʔiʃtayal il-xaʃab bi-dahab* he worked the wood with gold, he made a gold inlay in the wood. - vn *ʔiʃtiɣaal, ʃuɣl*; ava *miʃtiɣil*.

ش غ ى

شغى *ʃaɣa (i)* /vi/ to teem with. *bi-yiʃɣi naml* it is teeming with ants. *ʔil-ʔutubiis kaan bi-yiʃɣi ɛasaakir* the bus was swarming with soldiers. - vn *ʃaɣayaan*; ava *ʃaaɣi*.

ش ف see ش ف ه : *ʃafateen*

ش ف ت

شفت *ʃift* <T *çift*> /n pl *ʃifuut*/ (pair of) tweezers. - also *gift*.

ش ف ت ر

شفتر *ʃaftar* /vi/ to become thick (of lips). - vn *ʃaftara*; ava *miʃaftar*.
شفتورة *ʃaftuura* /n pl *ʃafatiir*/ (thick, fat) lip.

ش ف ت ش ى

شفتشى *ʃiftiʃi* /adj invar/ immodest, tawdry (in flashiness and transparency, usually of clothes).

ش ف خ ا ن see ش ف ى : *ʃafaxaana*

ش ف ر[1]

شفر *ʃafr* /n/ labium (of pudenda).
شفرة *ʃafra[1]* /n pl *-aat*/ **1a** edge of a blade. **1b** razor blade. **2** lip (of a quadruped).

ش ف ر[2]

شفرة *ʃafra[2]* <Fr *chiffre*> /n pl *-aat*/ code, cipher. *fakk iʃ-ʃafra* he deciphered the code.

ش ف ش ف

شفشف *ʃafʃif* /vi/ to long, yearn, be eager. *tibqa tiʃafʃif ɛala kubbaayit mayya ma-tlaqi-haa-ʃ* you could be dying for a glass of water and not find it! - vn *ʃafʃafa*; ava *miʃafʃif*.
اتشفشف *ʔitʃafʃif* or *ʔiʃʃafʃif* = *ʃafʃif*. - ava *mitʃafʃif*.

ش ف ش ق

شفشق *ʃafʃaq* /n pl *ʃafaaʃiq*/ pitcher, jug.

ش ف ط

شفط *ʃafaṭ (u)* /vt/ **1** to sip, suck in, absorb. *ʔil-makana b-tuffuṭ it-turaab* the machine sucks in the dust. **2** to drain away, siphon off. *huwwa ʃafaṭ filuus-i kull-a-ha* he siphoned off all my money. - vn *ʃafaṭaan, ʃaft*; ava *ʃaafiṭ*; pva *maffuuṭ*.
شفطة *ʃafṭa* /inst n, pl *-aat*/ a sip, a suck, a gulp.
شفّاط *ʃaffaaṭ* /n pl *-aat*/ siphon, suction pump, (loosely) any apparatus which works by siphoning or sucking (e.g., pipette). ‖ *ʃaffaaṭ ḥabb* grain elevator.
شفّاطة *ʃaffaaṭa* /n pl *-aat*/ **1** drinking straw. **2** intake component of a vacuum cleaner. **3** ventilator fan. **4** (short for *ʃaffaaṭit ballaaɛa*) drain plunger.
اتشفط *ʔitʃafaṭ* or *ʔiʃʃafaṭ* /vi/ **1** to be sipped, be sucked in, be absorbed. **2** to be drained away, be siphoned off. - iva *mitʃifiṭ*.
انشفط *ʔinʃafaṭ* = *ʔitʃafaṭ*. - iva *minʃifiṭ*.
شفّط *ʃaffaṭ* /vt/ **1** to cause to suck, cause to sip. **2** to siphon. *ʃaffaṭ il-banziin min il-ɛarabiyya* he siphoned

the petrol from the car. - vn *taffiiṭ*; ava/pva *miṣaffaṭ*.
اتشفّط ʔitʃaffaṭ or ʔiʃʃaffaṭ /vi/ passive of *ʃaffaṭ*. - iva *mitʃaffaṭ*.

ش ف ع
شفع *ʃafaɛ (a)* /vi/ to intercede. - vn *ʃafaaɛa, ʃafaɛaan*; ava *ʃaafiɛ*.
شافع *ʃaafiɛ* **1** /ava/ ‖*la ʃaafiɛ wala naafiɛ* there's no good in him, he's of no use to anyone. **2** /n */ mediator, intercessor.
الشافعى *ʔiʃ-ʃafɛi* /prop n/ the Imam el-Shafi'i (d. 820 AD), eponym of the Shafi'i school of Islamic law (*ʔil-mazhab iʃ-ʃafɛi*) as well as of a mosque and a large graveyard in Cairo.
شفعة *ʃufɛa* /n/ *[leg]* right of pre-emption.
شفيع *ʃafiiɛ* /n pl *ʃufaɛa*/ mediator, intercessor.
اتشفع ʔitʃaffaɛ or ʔiʃʃaffaɛ /vi/ to intercede. - ava *mitʃaffaɛ*.

[1] ش ف ف
شفّ *ʃaff (i)* /vt/ to trace, copy by tracing. *ʃaff ir-rasma* he traced the pattern. ‖*ʃustaan bi-yʃiff[i] wi-yriff* a classy dress. - vn *ʃaff, ʃafafaan*; ava *ʃaafif*; pva *maʃfuuf*.
شفافيّة *ʃafafiyya* /n/ translucence. ‖*ɛandaha ʃafafiyya* she has psychic powers.
شفّاف *ʃaffaaf* /adj/ translucent, semi-transparent. *waraq ʃaffaaf* tracing paper.
اتشفّ ʔitʃaff or ʔiʃʃaff /vi/ to be traced, be copied by tracing. - iva *mitʃaff*.

[2] ش ف ف see ش ف ه : *ʃiffa*

ش ف ق
شفق *ʃafaq (a)* /vi/ to show charity or compassion. - vn *ʃafaqaan, ʃafaqa, ʃafaq*; ava *ʃaafiq*.
شفقة *ʃafaqa* /n/ charity, compassion.
شفقان *ʃafqaan* /adj */ compassionate, sympathetic, disposed to mercy.
شفوق *ʃafuuq* /adj */ kind-hearted.
اتشفق ʔitʃafaq or ʔiʃʃafaq /vi/ passive of *ʃafaq*. *ʔitʃafaq ɛalee min kutr iḍ-ḍarb* he received much sympathy for being beaten so hard. - iva *mitʃifiq*.
أشفق ʔaʃʃaq = *ʃafaq*. - vn *ʔiʃʃaaq*, ava *miʃʃiq*.

ش ف ن ى ر
شفنيرة *ʃufuneera* or *ʃufuniira, ʃifaniira* or *ʃifanyiira* <Fr *chiffonier*> /n pl *-aat*/ piece of (bedroom) furniture consisting of drawers and cupboard, chiffonier.

ش ف ه
شفتين *ʃafateen* /dual n/ (one's) lips. *ṭiṭniṭiq bi-ḍamm iʃ-ʃafateen* it is pronounced with the lips rounded.
شفة *ʃiffa* /n/ **1** /pl *ʃafaayif, ʃifaʃ*/ lip. **2** /pl *ʃifaʃ*/ **2a** border, edge. *ʃiffit iṭ-ṭarabeeza* the edge of the table. **2b** *[mech]* jaw (of a vice etc.).
شفهى *ʃafahi* /adj/ oral, spoken.
شفوى *ʃafawi* /adj/ oral, spoken. *ʔimtiḥaan ʃafawi* oral examination.
شفاهى *ʃifaahiʔ* = *ʃafahi*.
مشافهة *muʃafha* /adv/ orally.

ش ف ه و ل
شفهول *ʃifhool* <Fr *chef de hall*> /n pl *ʃifaat hool*/ barroom supervisor in a hotel.

ش ف و see ش ف ه : *ʃafawi*

ش ف و ن
شفون *ʃifoon* <Fr> /n/ chiffon.

[1] ش ف ى
شفى *ʃifi (a)* /vi/ to recover, improve in health. ‖*ʔirʃu tiffu [prov]* see *raʃa* under ر ش ى - vn *ʃifa, ʃifaaʔ*.
شفى *ʃafa (i)* /vt/ to cure, heal. *ṣalawaat il-ʔimaan tiffi l-mariiḍ [Chr]* the prayers of faith heal the sick. ‖*ʃafaa-kum allaah wi-ɛafaa-kum [rur]* (God give you health and strength) response to *ʃufiitum* (q.v. below). - vn *ʃifa*; ava *ʃaafi*; pva *maʃfi*.
¶ *ʃufiitum [rur]* (may you have been relieved!) formula said to one leaving a lavatory.
شفاء *ʃifa* /n/ healing. ‖*bil-hana wiʃ-ʃifa* (≈ may it be of benefit to you) response to (1) an invitation to share food. (2) an appreciative comment on, or thanks given for, a meal. - *biʃ-ʃifa* (commonly said when giving out medication) ≈ may it bring good health.
شافى *ʃaafi* /n/ Healer (epithet of God).
شفخانة *ʃafaxaana* /n pl *-aat*/ **1** *[rur]* animal hospital. **2** *[obsol]* mobile military hospital.
شفيّة *ʃafiyya: ya ʃaafi kull[i] ʃafiyya* you who bring about every cure (phrase addressed to God in *raqw*).
اتشفّى ʔitʃaffa[i] or ʔiʃʃaffa[i] /vi/ to indulge in malicious pleasure. *ʔitʃaffa fiyya lamma fallist* he gloated over my going bankrupt. - vn *taʃaffi*; ava *mitʃaffi*.
مشفى *muʃfi* /n */ healer.
مستشفى *mustaʃfa, mistaʃfa* (also *muʃtaʃfa, miʃtaʃfa*) /n, usu fem, in constr also *mustaʃfit*, pl *mustaʃfayaat, mistaʃfayaat, mistaʃfiyaat, miʃtaʃfiyyaat*/ hospital.

ش ف ي [2]
شفّى *ʃaffa* /vt/ to bone. *laḥma mʃaffiyya* boned meat. - vn *taffiyya*; ava/pva *miʃaffi*.
اتشفّى *ʔitʃaffa*[2] or *ʔiʃʃaffa*[2] /vi/ to be boned (of meat). - iva *mitʃaffi*.

ش ق ء ف ز
شقأفزا *ʃuqʔafza* <P *shauq-afzâ*> /n/ *[mus]* mode in Arabic music beginning on B flat and having E flat and G flat.

ش ق ب
مشقبيّة *maʃqabiyya* /n pl *-aat*/ mortise, or any slot or hole made in a piece of metal to receive and secure a corresponding piece, e.g., the fork end of a bicycle.

ش ق ر [1]
شقر *ʃaqqar* /vi/ to make a check (with a personal visit). *ʃilʕit tʃaqqar ʕala l-waad* she went out to look in on the kid. *ma-tiigi tʃaqqar ʕaleena* do come and see how we are. - vn *taʃqiir*; ava *miʃaqqar*.
اتشقّر *ʔitʃaqqar* or *ʔiʃʃaqqar* /vi/ (impersonal) passive of *ʃaqqar*. *ḥa-yitʃaqqar ʕaleehum* they will be checked on. - iva *mitʃaqqar*.

ش ق ر [2]
أشقر *ʔaʃqar* /adj, fem *ʃaqra*, pl *ʃuqr*/ 1 blond. 2 sorrel (of a horse).
أشقراني *ʔaʃqaraani* /adj */ blondish.

ش ق ر [3]
شقارة *ʃaqaara: ʔil-filuus bi-truuḥ ʃaqaara nqaara* the money's going down the drain.

ش ق ر ف
شقرف *ʃuqruf* /n pl *ʃaqaarif*/ a medium-sized sickle.
شقرف *ʃaqraf* /vt/ to mow or reap with a *ʃuqruf*. - vn *ʃaqrafa*; ava/pva *miʃaqraf*.
اتشقرف *ʔitʃaqraf* or *ʔiʃʃaqraf* /vi/ passive of *ʃaqraf*. - iva *mitʃaqraf*.

ش ق ش see ش ء ش ق

ش ق ط
شقط *ʃaqaṭ (a)* /vt/ to catch (a flying or falling object). *ʃaqaṭt il-beeḍa qabl[i] ma tuqaʕ* I caught the egg before it fell. - vn *ʃaqṭ, ʃaqaṭaan*; ava *ʃaaqiṭ*; pva *maʃquuṭ*.
شقطة *ʃaqṭa* /inst n, pl *-aat*/ a catch.
اتشقط *ʔitʃaqaṭ* or *ʔiʃʃaqaṭ* /vi/ passive of *ʃaqaṭ*. - iva *mitʃiqiṭ*.

ش ق ع
شقع *ʃuqaʕ: ʃuqaʕ buqaʕ (ya rabb[i] yuqaʕ)* (children's chant when one of them tries a difficult climb) ≈ hope he falls off!

ش ق ف [1]
شقف *ʃaqaf (u)* /vt/ to hurl at, shoot at. *ʃaqaf-ni b-ṭuuba* he cast a stone at me. ‖*min ʃaaqif li-laaqif li-qabbaaḍ il-ʔarwaaḥ [prov]* (from thrower to catcher to the angel of death) this way, that way, and then to perdition (usually with reference to money consumed, or to individual suffering). - vn *ʃaqf*; ava *ʃaaqif*; pva *maʃquuf*.
شقف *ʃaqf* /coll n/ potsherd(s).
شقفة *ʃaqfa* /unit n, pl *-aat, ʃuqaf*/ a (pot)sherd.
شقفاية *ʃaqfaaya* = *ʃaqfa*.
شقافة *ʃuqaafa* /coll n/ potsherd(s).
شاقوف *ʃaquuf* /n pl *ʃawaqiif*/ tool used for breaking rock.
اتشقف *ʔitʃaqaf* or *ʔiʃʃaqaf* /vi/ to be pelted, be shot at. - iva *mitʃiqif*.
انشقف *ʔinʃaqaf* = *ʔitʃaqaf*. - iva *minʃiqif*.

ش ق ف [2]
مشقوف *maʃquuf* /adj */ longing, anxious. *maʃquuf ʕal-mayya* dying for a drink of water. *maʃquufa ʕala-bn-a-ha* anxious about her son.

ش ق ق
شقّ *ʃaqq[i] (u)* /vt/ 1 to split. *baṭṭiixa maʃquuqa* a split water-melon. ‖*ʃaqq[i] ḥduum-u* he reached the end of his tether. 2 to cut, dig (a road or canal). ‖*ʃaqq[i] ṭariiq-u l-waḥd-u* he made it on his own. - vn *ʃaqq, ʃaqaqaan, ʃiqqiyya*; ava *ʃaaqiq*; pva *maʃquuq*.
شقّ *ʃaqq*[2] /n pl *ʃuquuq*/ 1 slit, crack, split. *sadd[i] gamiiʕ if-fuquuq* he filled in all the cracks. ‖*ḥaṭṭ[i] ṣubaaʕ-u fif-faqq [prov]* he gave up, he threw in the towel. - *yiṭlaʕ min if-fuquuq yixalliṣ il-ḥuquuq [prov]* ≈ help sometimes comes from the most unexpected quarters. 2 a half. *ʃaqq[i] fuul* a half-loaf *fuul midammis* sandwich. *ʃaqq il-qamar* half-moon shape.
شقّة *ʃaqqa* /n/ 1 /pl *-aat*/ 1a /unit n/ a split, a cut. 1b half (of s.th. (split) in two parts, e.g., a half-round of Arab bread, a buttock, a side of beef). 2 /pl *ʃuqaq, ʃiqaq*/ apartment, flat.
شاقّ *ʃaaqq* /adj/ arduous, troublesome. *tadriib-u ʃaaqq* training him is a tedious matter. *ʔaʃɣaal ʃaaqqa [leg]* hard labour.
شقيق *ʃiqiiq* /n pl *ʃuqaqa, ʃaqaayiq, ʔaʃiqqa*/ 1 full brother. 2 /with masc n referent/ exact replica, twin. *ʃustaan ʃiqiiq bitaaʕ-ik* a dress exactly like yours.

شقيقة *ʃiqiiqa* /n pl *ʃuqaqa, ʃaqaayiq/* **1** full sister. *ʕuxteen ʃaqaayiq* two full sisters. ‖*ʃiqiiqit nuʕmaan [bot]* red anemone. **2** /with fem n referent/ exact replica, twin. *gallabiyya ʃqiiqit bitaʕt-ak* a galabiya exactly like yours.

مشقّة *maʃaqqa* /n/ hardship. *ʕil-ʕagr[a] ʕalà qadd il-maʃaqqa* the recompense is commensurate with the effort.

اتشقّ *ʕitʃaqq* or *ʕiʃʃaqq* /vi/ **1** to split. *b-atmanna l-ʕarḍ[i] tiʃʃaqq[i] w-tiblaʕ-ni* I wish the earth would open up and swallow me! (said in cases of extreme grief, embarrassment or annoyance). **2** passive of *ʃaqq[1]*. - ava/iva *mitʃaqq*.

انشقّ *ʕinʃaqq* = *ʕitʃaqq*. - vn *ʕinʃiqaaq*; ava/iva *minʃaqq*.

شقّق *ʃaqqaq* **1** /vt/ to split, crack open. **2** /vi/ to crack, split, become cracked or split. *ʕarḍ[i] naʃfa wi-mʃaqqaqa* dry, cracked earth. - vn *taʃqiiq*; ava/pva *miʃaqqaq*.

اتشقّق *ʕitʃaqqaq* or *ʕiʃʃaqqaq* /vi/ **1** passive of *ʃaqqaq*. **2** to crack, split. - vn *taʃaqquq*; ava/iva *mitʃaqqaq*.

ش ق ل

شقل *ʃaqal (u)* /vt/ to throw, fling. *ʕiʃqul-li l-koora* throw me the ball. - vn *ʃaqalaan, ʃaql*; ava *ʃaaqil*; pva *maʃquul*.

شقلة *ʃaqla* /inst n, pl *-aat*/ a throw. ‖*laazim ʕandu ʃaqlit filuus* he must have a bundle! he must have oodles of money!

اتشقل *ʕitʃaqal* or *ʕiʃʃaqal* /vi/ to be thrown, be flung. - iva *mitʃiqil*.

ش ق ل ب

شقلب *ʃaqlib* /vt/ to overturn, flip over. *ʕeeh illi ʃaqlib ḥal-kum* whatever happened to change your circumstances? *ḥubb-u ʃaqlib ʕaql-i* his love flipped my mind! - vn *ʃaqlaba*; ava/pva *miʃaqlib*.

شقلبة *ʃaqlaba* /n pl *-aat*/ flip.

شقلبية *ʃuqleeba* /n pl *ʃaqaliib*/ whirl.

مشقلب *miʃaqlib* /pva/ ‖*bil-miʃaqlib* (1) upside down. (2) inside out.

اتشقلب *ʕitʃaqlib* or *ʕiʃʃaqlib* /vi/ to overturn or be overturned, flip over or be flipped over. *ʕiʃʃaqlib li-ʕuddaam fil-hawa* he made a forward flip in the air. - ava/iva *mitʃaqlib*.

ش ق ل ب –

شقلباظ *ʃaqlabaaʒ* <prob T *şaklaban*> /n/ **1** somersault. **2** tumbler (pigeon). — /adj invar/ **3** shifty, slippery.

ش ق و see ش ق ى: *ʃaqaawa*

ش ق ى

شقى *ʃiqi (a)* /vi/ to toil, work hard. *bi-yiʃqa ʕaʃaan yiwakkil-na* he slaves to feed us. - vn *ʃaqa, ʃaqayaan*; ava *ʃaqyaan*.

شقى *ʃaqi* /adj pl *ʕaʃqiya, ʃuqaay/* **1** naughty, mischievous. ‖*ʕumr iʃ-ʃaqi baqi [prov]* the life of the scamp lasts longest. **2** miserable, wretched. ‖*fii ḥadd[i] ykuun fi-ʕiid-u l-qalam wi-yiktib nafs-u ʃaqi [prov]* (is there anyone who if he held the pen would write himself unfortunate) ≈ no one is willingly wretched.

أشقى *ʕaʃqa* /el/ **1** more/most naughty or mischievous. **2** more/most miserable.

شقاوة *ʃaqaawa* /n/ naughtiness, mischief.

اتشاقى *ʕitʃaaqa* or *ʕiʃʃaaqa* /vi/ to be naughty, behave mischievously. - ava *mitʃaaqi*.

ش ك ا

شكا، شكه *ʃaka[1]* /n/ style of serving in the game of *xara* (q.v.). - also *ʃakumba*.

ش ك ا ر

شكارة *ʃikaara* or *ʃukaara* /n pl *-aat, ʃakaayir/* gunny sack, small- or medium-sized sack. *ʃikaarit ʕasmant* sack of cement.

ش ك ب ب

شكبّة *ʃukubba* <It *scopa*> /n/ *[naut]* broom, mop. - also *ʕuʃkubba*.

ش ك ح

شكح *ʃakaḥ (i)* /vt/ to send into raptures. *min saaʕit ma simiʕ ḥiss[i] ʕumm[i] kalsuum qaaʕid maʃkuuḥ* since he first heard Umm Kalthum's voice he's been enraptured. - vn *ʃakḥ*; ava *ʃaakiḥ*; pva *maʃkuuḥ*.

انشكح *ʕinʃakaḥ* /vi/ to be filled with pleasure, be enraptured. *lamma ʃuft il-bint[i] di nfakaḥt* when I saw this girl I was enraptured. - vn *ʕinʃikaaḥ*; iva *minkiʃiḥ*.

اتشكح *ʕitʃakaḥ* or *ʕiʃʃakaḥ* = *ʕinʃakaḥ*. - iva *mitʃikiḥ*.

ش ك ر[1]

شكر *ʃakar (u)* **1** /vt/ to thank, give thanks to, express gratitude, acknowledgement or appreciation to. *laazim ʕaʃkur-u ʕalee* I must thank him for it. ‖*ʃakar allaahu saʕya-kum* response to phrases of condolence ≈ may God reward your efforts. **2** /vi/ to speak highly, give praise. *ma yiʃkur fi-nafs-u ʕilla ʕibliis [prov]* (only Satan praises himself) nothing is more foul than self-praise. - vn *ʃukr, ʃukraan*; ava *ʃaakir*; pva *maʃkuur*.

¶ *tuſkar* thank you! many thanks!
شكر *ſukr* /n/ thanks. ‖ *ʔalfⁱ ſukr* a thousand thanks! - *ʔiſ-ſukrⁱ li-llaah* ≈ don't mention it (response to expressions of thanks).
¶ *ſukran* thank you! thanks!
شكرانيّة *ſukraniyya* /vn/ praising, praise. ‖ *ʔana b-aquul kìda miſ ſukraniyya f-nafs-i* I say this with all due modesty.
شكور *ſakuur* /n/ He to whom we owe thanks (epithet of God).
اتشكر *ʔitſakar* or *ʔiſſakar* /vi/ 1 to be thanked. 2 (impersonal) passive of *ſakar* 2. *ʔitſakar fii* he was praised. - iva *mitſikir*.
انشكر *ʔinſakar* = *ʔitſakar*.
اتشكّر *ʔitſakkar* or *ʔiſſakkar* /vi/ to express thanks, give thanks. - aya *mitſakkar*.
متشكّر *mutaſakkir, mutſakkir* /adj */ thankful. *(ʔana) mutaſakkir* thanks! (I) thank you!

ش ك ر [2] see ش ك ا ر : *ſikaara*

ش ك ر م
شكارمة *ſikarma* <Gr *skarmos*> /n pl *-aat*/ tholepin. - also *ʔiſkarma*.

ش ك ر ى ا
شكوريا *ſikurya* <It *cicoria*> /n/ chicory.

ش ك س
شاكس *ſaakis* /vt/ to provoke, pick a fight with. *qaʕad yiſakis-ni l-ʕaayit ma ḍarabt-u* he went on provoking me until I hit him. - vn *miſaksa*; ava *miſaakis, muſaakis*.
مشاكسة *muſaksa, miſaksa* /n pl *-aat*/ quarrel, fight, argument.
اتشاكس *ʔitſaakis* or *ʔiſſaakis* /vi/ to quarrel, be quarrelsome. *ḥ-atſaakis maʕaahum* I'll pick a fight with them. - ava *mitſaakis*.

ش ك ش ك
شكشك *ſakſik* /vt/ 1 to prick, cause to feel prickly. *ʔiṣ-ṣuuf il-xiſin bi-yſakſik-ni* rough wool makes me feel prickly. — /vi/ 2 to feel prickled, feel prickly. 3 to bubble (of a liquid, from heat). - vn *ſakſaka*; ava/pva *miſakſik*.
اتشكشك *ʔitſakſik* or *ʔiſſakſik* /vi/ 1 to be prickled, be prickled. 2 to feel prickled, feel prickly. - ava/iva *mitſakſik*.

ش ك ش و ك
شكشوكة *ſakſuuka* /n/ 1 any of various dishes, consisting usually of a base of tomatoes and onions in which fish or, more commonly, eggs are cooked, sometimes with the addition of rice or *fuul*. 2 type of fish.

ش ك ك [1]
شكّ *ſakk* [1] *(i, u)* 1 /vt/ to prick. *ſakk il-ʕirqⁱ w-nizil damm* he pricked the vein and blood came out. ‖ *ſakk(-u) maqlab* (or *dabbuus*) to play a dirty trick on (s.o.). 2 /vi/ to have doubts or suspicions. *bi-tſukkⁱ fi-lli ʔana b-aquul-u* do you doubt what I say? *ʔaſxaaṣ maſkuuk fiihum* suspects. - vn *ſakk*; ava *ſaakik*; pva *maſkuuk*.
شكّ *ſakk* [2] /n pl *ſukuuk*/ doubt. *la ſakk* or *bila ſakk* or *ma-fii-ſ ſakk* no doubt.
شكّة *ſakka* /n pl *-aat*/ 1 /unit n/ a prick. *bi-yʕayyaṭ min ſakkit dabbuus* he cries from a pin-prick (i.e. for the slightest reason). 2 small stitch.
اتشكّ *ʔitſakk* or *ʔiſſakk* /vi/ 1 to be pricked. *yiſſakkⁱ f-lisaan-u [women]* may his (evil) tongue be pricked! 2 (impersonal) passive of *ſakk* [1] 2. *ʔitſakkⁱ fii* he is suspected. - iva *mitſakk*.
انشكّ *ʔinſakk* = *ʔitſakk*. - iva *minſakk*.
شكّك *ſakkik* [1] /vt/ 1 to prick repeatedly. 2 to cause (s.o.) to have doubts or misgivings. *ſakkik-ni fiſ-ſuvlⁱ kull-u* he gave me misgivings about the whole affair. *ḥagaat tiſakkik fil-ḥukuuma* things which raise doubts about the government. - vn *taſkiik*; ava *miſakkik*.
اتشكّك *ʔitſakkik* [1] or *ʔiſſakkik* [1] /vi/ passive of *ſakkik* [1]. - iva *mitſakkik*.

ش ك ك [2]
شكك *ſukuk* /n/ credit. *ʕiſtⁱ biſ-ſukuk* I lived on credit. *ʔiſ-ſukuk mamnuuʕ wiz-zaʕal marfuuʕ* ≈ credit is not given and annoyance is (thereby) removed (sign in cheap shops, bars etc.). - /adverbially/ on credit. *ʔiſtareet-u ſukuk* I bought it on credit.
شكّك *ſakkik* [2] /vt/ to buy or sell on credit. *ſakkik il-biḍaaʕa* he sold the merchandise on credit. *ʔana ma-b-aſakkik-ſ* I don't accept credit. - ava *taſkiik*; ava *miſakkik*.
اتشكّك *ʔitſakkik* [2] or *ʔiſſakkik* [2] /vi/ passive of *ſakkik* [2]. - iva *mitſakkik*.

ش ك ك [3]
شكّ *ſakk (u)* /vi/ 1 to take, catch (of fire, and the like). 2 to harden, set (of concrete or plaster). *xarasaana sariiʕit iſ-ſakk* quick-setting concrete. — /vt/ 3 to strike (a match). - vn *ſakka, ſakakaan*; ava *ſaakik*.
شكّاكة *ſakkaaka* /n pl *-aat*/ striking surface (of a match-box).

¹ ش ك ل

شكل *ʃakl* /n pl *ʕaʃkaal*/ **1a** shape, form. *kawitʃ*ᵃ *ɛala ʃakl*ⁱ *dayra* rubber in a circular shape. **1b** figure, diagram. **2** (also *ʃikl*) appearance. *ʃakl-a-ha ɦilw* she has a nice appearance. *ʃakl-u mirtifi* he looks like someone who'll take a bribe. **3** way, manner. *laazim ʕaṯlaɛ bi-ʕayyⁱ ʃaʔkl* I must get out by any means. *bi-ʃaklᵃ ɛamali* in a practical way. **4** kind, sort, specimen. *fii ʃaklⁱ xaʃabi* there is a wooden kind. ‖ *ʕanwaaɛ wi-ʕaʃkaal* or *ʕaʃkaal wi-ʕalwaan* a wide variety. — /masc and fem sing adj/ **5** (also *ʃikl*) different. *kullⁱ yoom bi-yruuɦ li-duktuur ʃakl* every day he goes to a different doctor.

¶ *bi-ʃakl* /adv/ very, extremely. *hiyya laṭiifa b-ʃakl* she's very charming.

شكلي *ʃaklii*↑ /adj/ formal. *ʕigraaʕ ʃaklii* a formal measure.

شكليّات *ʃakliyyaat*↑ /pl n/ formalities.

شكل *ʃikl* see *ʃakl* 2 and 5.

أشكل *ʕaʃkal* /el/ more/most strange or odd. *ʕil-ʕaʃkal ʕinn il-bintⁱ mabsuuṭa maɛaa* the strangest thing is that the girl is happy with him.

شكّل *ʃakkil* /vt/ **1** to give shape or form to. *bi-yʃakkil in-naɦaas zayyⁱ ma-nta ɛaayiz* he shapes the copper as you want. **2** to make up, constitute. *ɦa-nʃakkil lagna* we'll form a committee. *ʕil-ɦikaaya di bi-tʃakkil xuṭuura kbiira* the affair constitutes a great danger. **3** to make an assortment of. *ʃakkil-li bumbuuni* make an assortment of candies for me! **4** to mark (Arabic words) with short vowel signs. - vn *taʃkiil*; ava/pva *miʃakkil*.

تشكيل *taʃkiil* /n pl *-aat, taʃakiil*/ formation. *taʃkiil huguum* attack formation.

تشكيلة *taʃkiila* /n pl *-aat*/ **1** assortment. *taʃkiilit salaṭaat* an assortment of salads. **2** *[text]* defect in weave resulting from the warp dropping the woof.

تشكيلي *taʃkiili* /adj/ plastic, formative. *ʕil-funuun it-taʃkiliyya* the plastic arts.

مشكّل *miʃakkil* /adj/ mixed, assorted. *gilaas miʃakkil* mixed-flavour ice cream. ‖ *gazma mʃakkila* two-tone shoes.

اتشكّل *ʕitʃakkil* or *ʕiʃʃakkil* /vi/ **1** passive of *ʃakkil*. **2** to take shape or form. - ava/iva *mitʃakkil*.

² ش ك ل

شكل *ʃakal* /n/ quarrelling. *wiffⁱ da walla garrⁱ ʃakal [joc, abus]* (is that a face or an attempt to pick a quarrel?) what sort of face is that you're pulling? (to one with a stern countenance).

شكلة *ʃakla* /n pl *-aat, ʃukal*/ quarrel.

شكل *ʃukal*↓ /adj invar/ quarrelsome, cantankerous.

شكلي *ʃukali* /adj */ quarrelsome, cantankerous.

شاكل *ʃaakil* /vt/ be quarrelsome with, provoke. - vn *miʃakla*; ava *miʃaakil*.

اتشاكل *ʕitʃaakil* or *ʕiʃʃaakil* /vi/ to pick fights, get into fights. - ava *mitʃaakil*.

إشكال *ʕiʃkaal* /n pl *-aat*/ problem, difficulty.

مشكل *muʃkil* /n pl *maʃaakil*/ problem, difficulty.

مشكلة *muʃkila* /n pl *maʃaakil, muʃkilaat*/ problem, difficulty. *ɛayziin niɦill il-muʃkila* we want to solve the problem.

استشكل *ʕistaʃkil* /vi/ *[leg]* to find legal grounds for contesting a case. - vn *ʕistiʃkaal*; ava *mistaʃkil*.

ش ك ل ا

شيكولاتا *ʃukulaata, ʃukalaata, ʃakalaata*↓, *ʃikulaata* <It *cioccolata*> /coll n/ chocolate(s).

شيكولاتاية *ʃukulataaya, ʃukalataaya, ʃakalataaya*↓, *ʃikulataaya* /unit n, pl *ʃukulataat, ʃukalataat, ʃakalataat*↓, *ʃikulataat*/ a chocolate, a bar or piece of chocolate.

ش ك ل ل م

شكلمة *ʃakallama* <prob T *şekerleme*> /n/ type of pastry with coconut.

شكلّماية *ʃakallamaaya* /n pl *ʃakallamaat*/ unit noun of *ʃakallama*.

¹ ش ك م

شكم *ʃakam (u, i)* /vt/ to curb, restrain. *ma-yiɛraf-ʃⁱ yuʃkum ibn-u* he doesn't know how to control his son. - vn *ʃakamaan, ʃakm*; ava *ʃaakim*; pva *maʃkuum*.

اتشكم *ʕitʃakam* or *ʕiʃʃakam* /vi/ to be curbed, be restrained. - iva *mitʃikim*.

انشكم *ʕinʃakam* = *ʕitʃakam*. - iva *minʃikim*.

² ش ك م

شكمة *ʃakma* <T *çıkma*> /n pl *-aat*/ (enclosed) balcony.

ش ك م ا ن

شكمان *ʃakmaan, ʃakamaan* <prob Fr *échappement*> /n pl *-aat*/ *[auto]* exhaust system.

ش ك م ب ا

شكمبا *ʃakumba* /n/ style of serving in the game of *xara* (q.v.). - also *ʃaka*.

ش ك م ج ي

شكمجيّة *ʃakmagiyya* <T *çekmece*> /n pl *-aat*/ *[obsol]* casket, dressing-case.

ش ك و see ش ك ى : *ʃakwa*

ش ك و ش
شاكوش *ʃakuuʃ* <T *çekiç*> /n pl *ʃawakiiʃ*/ **1** hammer. *ḍarb[i] ʃakuuʃ* hammer blow (in boxing). **2** *[auto]* rotor (of a car distributor). **3** /no pl/ inspector (of railway track).

ش ك ى
شكى *ʃaka[2] (i)* /vt/ to complain about. *ʃaka (min) ḥaal-u* he bewailed his state. *ʃakit goz-ha l-ʕumm-a-ha* she complained about her husband to her mother. *ʃakaa-ni lil-buliiṣ* he went and reported me to the police. ‖ *ʕiʃ-ʃakwa li-ɣeer illaah mazalla [prov]* to complain to other than God is a humiliation. - *ʕiʃ-ʃakwa li-ʕaḥl il-baṣiira ʒeeb [prov]* to complain to the perspicacious is improper (because they can see (what's wrong) for themselves). - vn *ʃikaaya, ʃakw, ʃakwa, ʃakiyya*; ava *ʃaaki*; pva *maʃki*.
شكوى *ʃakwa* /n pl *ʃakaawi*/ complaint.
شاكى *ʃaaki* /n pl *ʃukaah*/ accuser.
شكّاى *ʃakkaay* /adj */ given to complaining. *ʃakkaay bakkaay* perpetually whining and complaining.
اتشكى *ʕitʃaka* or *ʕiʃʃaka* /vi/ (impersonal) passive of *ʃaka*. *ḥaaga ma-yitʃikii-ʃ minha* a matter one doesn't complain about. - iva *mitʃiki*.
انشكى *ʕinʃaka* = *ʕitʃaka*. - iva *minʃiki*.
اتشكّى *ʕitʃakka* or *ʕiʃʃakka* /vi/ **1** to complain. **2** to appeal (against a judgement). - vn *taʃakki*; ava *mitʃakki*.
اشتكى *ʕiʃtaka* /vt and vi/ to complain. *bi-tiʃtiki min if-fuxl[a] ɣala ʈuul* you complain about work without let-up. - ava *miʃtiki*.

ش ل ا ن
شيلان *ʃilaan* /coll n/ Synadontis schall, a Nile fish. - also *ʃaal*.

ش ل ب [1]
شلب *ʃalab (i)* /vt/ to swipe, pinch (in the jargon of the underworld). - vn *ʃalb, ʃalabaan*; ava *ʃaalib*; pva *maʃluub*.

ش ل ب [2]
شلبة *ʃilba* <Copt> /coll n/ type of Nile fish (Silurus mystus).
شلباية *ʃilbaaya* /n pl *-aat*/ unit noun of *ʃilba*.

ش ل ب [3]
شلبى *ʃalabi* <T *çelebi*> /adj */ *[obsol]* **1** generally excellent and in good shape. *bint' ʃalabiyya* good-looking girl. *raagil ʃalabi* generous and cheerful man. *ʕil-beeḍ ʃalabi n-nahar-da* the eggs are good and fresh today. ‖ *fiṭiir ʃalabi* a many-layered pastry folded over a centre of raisins, nuts and sweet syrup. **2** temperamental (of a man).

ش ل ب [4]
يشلب *yiʃlib* /vi, imperf only/ to spurt out, gush out (e.g., of blood). - vn *ʃalb, ʃalabaan*; ava *ʃaalib*.

ش ل ب ى ن
شلبين *ʃilbeen* /n/ infection (in animals) manifesting itself in thorny projections upon the tongue.

ش ل ت [1]
شلّوت *ʃalluut* <Copt> /n pl *ʃalaliit*/ a kick. *ḍarab-u biʃ-ʃalluut* he kicked him.
شلّت *ʃallit* /vi/ to kick (again and again). *ʃallit-lu kamaan* give him a few more kicks. - vn *taʃliit*; ava *miʃallit*.
اتشلّت *ʕitʃallit* or *ʕiʃʃallit* /vi/ (impersonal) passive of *ʃallit*. *ʕitʃallit luhum kitiir* they were kicked about (a lot). - iva *mitʃallit*.

ش ل ت [2]
شلتة *ʃalta* <T *şilte*> /n pl *ʃilat, ʃaltaat*/ cushion (for a couch or chair).

ش ل ت [3] see ش ل ى ت : *ʃiliita*

ش ل ت ت
شلاتيت *ʃalatiit: ʕumm iʃ-ʃalatiit [zool]* omasum, many-plies. - also *ʕumm it-talaʃiif, ʕumm il-laʃaliif*.
مشلتت *miʃaltit* (also *fiṭiir miʃaltit*) /coll n/ large pastry consisting of many layers of dough and clarified butter or cream baked and eaten with cream, honey or cheese.
مشلتتة *miʃaltita* (also *fiṭiira miʃaltita*) /pl *-aat*/ unit noun of *miʃaltit*.

ش ل ح
شلح *ʃalaḥ (i, a)* /vt/ **1** to take off, remove (a garment). **2** to fire, dismiss. **3** *[Chr]* to defrock (a member of the clergy). — /vi/ **4** to become short (usually of the skirt of a garment). - vn *ʃalḥ, ʃalaḥaan*; ava *ʃaaliḥ*; pva *maʃluuḥ*.
شلّح *ʃallaḥ[1]* /n/ card game resembling snap or beggar-your-neighbour.
أشلح *ʔaʃlaḥ* /adj, pl *ʃulḥ*/ balding.
اتشلح *ʕitʃalaḥ* or *ʕiʃʃalaḥ* /vi/ passive of *ʃalaḥ* 1, 2, 3. - iva *mitʃiliḥ*.

انشلح ʔinʃalaḥ = ʔitʃalaḥ. - iva *minʃiliḥ*.
شلّح ʃallaḥ[2] /vt/ **1a** to raise (the skirt of a garment). *ʃallaḥit deel fustan-ha* she lifted the hem of her dress. **1b** to uncover (by raising the skirt of a garment). *ʔil-hawa ʃallaḥ riglee-ha* the wind (lifted her skirt and) revealed her legs. ‖ *ʔil-balad illi ma-yiɛrafu-k-ʃ[i] fiiha ʃallaḥ wi-gri fiiha [prov]* (you can) expose yourself and run about in the town where they don't know you. **2** to snap (a card in the game *ʃallaḥ*). — /vi/ **3** to flash, expose the genitals. **4** to become penniless. - vn *taʃliiḥ*; ava/pva *miʃallaḥ*.
اتشلّح ʔitʃallaḥ or ʔiʃʃallaḥ /vi/ passive of *ʃallaḥ*[2] 1, 2. - iva *mitʃallaḥ*.

ش ل خ ت
شلختة ʃilixta /n pl *-aat*/ <poss Yiddish> *[obsol]* large ugly woman.
شلختاية ʃilixtaaya /n pl *ʃilixtaat*/ = *ʃilixta*.

ش ل س ت –
شلستون ʃilistoon <Engl *Charleston*>: *banṭaloon ʃilistoon* flared trousers.

ش ل ش ل
شلشل ʃalʃil <prob Copt> /vi/ to pull a kerchief to and fro across the back and front of the neck as a gesture of mourning (of a woman). - vn *ʃalʃala*; ava *miʃalʃil*.
اتشلشل ʔitʃalʃil or ʔiʃʃalʃil /vi/ (impersonal) passive of *ʃalʃil*. ‖ *ʔin ʃa-lla yitʃalʃil ɛaleeha* I hope she kicks the bucket! - iva *mitʃalʃil*.

ش ل ض م
شلضومة ʃalḍuuma /n pl *ʃalaḍiim*/ thick lip.
مشلضم miʃalḍam /adj/ thick-lipped.

ش ل ف see ش ل ل و ف : *ʃalluufa*

ش ل ف ط
شلفط ʃalfaṭ /vt/ to smudge, smear. *ʃalfaṭ il-ʔalwaan bi-mayya* he blurred the colours with water. *wiʃʃ-u mʃalfaṭ miḍ-ḍarb* his face is a mess from the beating. - vn *ʃalfaṭa*; ava/pva *miʃalfaṭ*.
اتشلفط ʔitʃalfaṭ or ʔiʃʃalfaṭ /vi/ to be smeared, be smudged. - iva *mitʃalfaṭ*.

ش ل ق[1]
شلق ʃalaq /adj invar/ ill-bred, insolent, abusive. *ʔin-niswaan iʃ-ʃalaq dool* those foul-mouthed broads.
شلّق ʃallaq /vi/ to behave in an insolent and abusive fashion. *ʔana miʃ faahim ʃallaq-li kida leeh* I don't understand why he acted so abusively toward me. - vn *taʃliiq*; ava *miʃallaq*.
اتشلّق ʔitʃallaq or ʔiʃʃallaq /vi/ **1** to be foul-mouthed. *ʔitʃallaq ɛalayya min ɣeer sabab* he showered me with obscenities for no reason at all. **2** (impersonal) passive of *ʃallaq*. *ʔana miʃ min illi b-yitʃallaq luhum* I'm not one to be spoken to with abusive language! - ava/iva *mitʃallaq*.

ش ل ق[2]
شلق ʃilq <perh Copt> /n pl *ʃiluuq, ʃilíqa/ [rur]* string, thin rope.

ش ل ل[1]
شلّ ʃall (i) /vt/ to paralyse. *ʔil-xoof ʃall-u* fear paralysed him. - vn *ʃalalaan, ʃalal*; ava *ʃaalil*; pva *maʃluul*.
شلل ʃalal /n/ paralysis. *ʃalal il-ʔaṭfaal* infantile paralysis, polio.
اتشلّ ʔitʃall or ʔiʃʃall /vi/ to become paralyzed. *ʔiʃʃall[i] f-diraaɛ-u* his arm became paralyzed. - iva *mitʃall*.
انشلّ ʔinʃall = ʔitʃall. - iva *minʃall*.

ش ل ل[2]
شلالة ʃilaala /n/ basting, tacking. *ɛaawiz ʃilaala qabl[i] ma tmakkin-ha* it has to be basted before you sew it on the machine.
شلّل ʃallil /vt/ to baste, tack. - vn *taʃliil*; ava/pva *miʃallil*.
اتشلّل ʔitʃallil or ʔiʃʃallil /vi/ to be basted, be tacked. - iva *mitʃallil*.

ش ل ل)[3]
شلّة ʃalla /n pl *-aat, ʃilal, ʃulal*/ hank, skein.
شلّة ʃilla /n pl *ʃilal, ʃulal*/ group, clique. *ruḥna ʃilla kbiira* we went in a big group. *di ʃillit-ak* is this the gang you hang out with?
شلّال ʃallaal /n pl *-aat*/ **1** (Nile) cataract. **2** waterfall.

ش ل ل[4] see ش ى ء[1] : *maʃalla*

ش ل ل اه
شلّاه ʃillaah, ʃallaah: ʃillaah ya ..., ʃallaah ya ... /interj/ **1** invocation of the aid of a Muslim saint. *ʃillaah ya sayyid* may Sayyid (Badawi) help me! *lissa ɛala muulid il-ḥuseen talat ʔasabiiɛ - ʃillaah ya ḥuseen* it's still three weeks till the birthday celebration of Hussein; may Hussein enable me to take part! **2** expression of disbelief. *lamma ʔaqbaḍ il-mukafʔa ḥ-addii-k nuṣṣ-a-ha - ʃillaah ya mukafʔa* 'When I cash the bonus, I'll give you half.' 'A bonus! that'll be the day!' *ḥ-adfaɛ-lak kull[i] malliim ɛalayya - ʃillaah ya ḥ-adfaɛ-lak* 'I'll pay you

every penny I owe you.' 'You'll pay me! What a laugh!'

ش ل ل و
شيلّو، تشيلّو *ʃillu* <It> /n pl *-haat/ [mus]* cello.

ش ل ل و ف
شلّوفة *ʃalluufa* /n pl *ʃalaliif/ [non- Cairene]* a protruding, camel-like lip.

ش ل ن [1]
شلن *ʃilin* <Engl *shilling*> /n pl *-aat/* five piastres, five-piastre coin.

ش ل ن [2] see ش ل ا ن : *ʃilaan*

ش ل ن د ر see س ل ن د ر : *ʃilindar*

ش ل ى
شلية *ʃalya* /n pl *-aat, ʃawaali/* 1 earthenware vessel similar in shape to, but smaller than, a *maguur* (see Pl.A, 8), especially one used in milking cattle.

ش ل ى ت
شليتة *ʃiliita* /n pl *ʃalaayit/ [rur]* donkey-pannier similar to, but larger than, a *ʁabiiṭ* (see Pl.D, 4).

ش ل ى ن
شلين *ʃilyan* <Engl *Chilean*>: *baṭṭiix ʃilyan* type of round sweet water-melon, with dark green skin.

ش ل ى ه
شاليه *ʃaleeh* <Fr> /n pl *-aat/* chalet.

ش م ء ن ط
اشمأنط *ʔiʃmaʔnaṭ* /vi/ to feel distaste, become disgusted. -vn *ʔiʃmiʔnaaṭ*; ava *miʃmaʔnaṭ*.

ش م ب ر see ش ن ب ر

(ش م ب ن –)
شمبانزى *ʃambanzi* <Engl> /n pl *-aat/* chimpanzee.
شمبانوار *ʃambanwaar* <Fr *chambre noire*> /n/ *[phot]* darkroom.
شمبانيا *ʃambanya* <Fr> /n/ champagne.

ش م ت
شمت *ʃimit (a)* /vi/ to indulge in malicious joy, gloat. *ʃimit fiyya lamma ffilt* he took malicious pleasure at my expense when I failed. -vn *ʃamaata, ʃamataan*; ava *ʃaamit, ʃamtaan*.

اتشمت *ʔitʃamat* or *ʔiʃʃamat* /vi/ (impersonal) passive of *ʃimit*. -iva *mitʃimit*.
انشمت *ʔinʃamat* = *ʔitʃamat*. -iva *minʃimit*.
شمّت *ʃammit* /vt/ to arouse schadenfreude in (s.o.). *rabb-i-na ma-yʃammit fiik ḥadd* may God never cause anyone to gloat at your expense. -vn *taʃmiit*; ava *miʃammit*.
اتشمّت *ʔitʃammit* = *ʃimit*. -ava *mitʃammit*.

ش م ح ط
شمحطى *ʃamaḥṭi* /n pl *-yya/* tough, bully.
شمحطجى *ʃamaḥṭagi* = *ʃamaḥṭi*.

ش م خ
شمخة *ʃamxa* /n/ spicy aroma (of food).
شمخيّة *ʃumuxiyya* = *ʃamxa*.

ش م د ر ى
شامدوريا *ʃamdurya* /n/ ornamental palm (Chamaedoria elegans).

ش م ر [1]
شمر *ʃamar[1] (u)* /vt/ 1 to hitch up, raise (the skirt of a garment). 2 to uncover (by rolling up one's sleeves). *ʔuʃmur diraaʁ-ak* bare your arm! – /vi/ 3 to ride up (of a skirt etc.). *ʔil-fustaan ʃamar lamma ʠaʁadit* when she sat down, the (skirt of her) dress rode up. -vn *ʃamaraan, ʃamr*; ava *ʃaamir*; pva *maʃmuur*.
شمّر *ʃammar[1]* /vt/ 1 to hitch up, raise, roll up (one's garments). *ʃammar kimaam-u* he rolled up his sleeves. *ʃammar il-gallabiyya w-naṭṭ* he hitched up his gown and jumped. 2 to uncover (by hitching or raising a garment). *ʃammar ʔiid-u* (or *diraʁt-u*) he bared his arm (by rolling up his sleeve). – /vi/ 3 to prepare to fight. -vn *taʃmiir*; ava *miʃammar*.
اتشمّر *ʔitʃammar* or *ʔiʃʃammar* /vi/ passive of *ʃammar* 1 and 2. -iva *mitʃammar*.

ش م ر [2]
شمر *ʃamar[2]* /n/ fennel. *ʔiʃ-ʃamar il-ḥilw* Florence fennel.
شمّر *ʃammar[2]* = *ʃamar[2]*.

ش م ر [3]
مشمّر *miʃammar* nonce word in the phrase *ʔil-miḥammar wil-miʃammar* a specially-prepared fancy meal.

ش م ر ت see ش م ر د : *ʃamurt*

ش م رخ

شمرخ *ʃamrax, ʃamrax* /vi/ to attain full growth, become vigorously sturdy. - vn *ʃamraxa, ʃamraxa*; ava/pva *miʃamrax, miʃamrax*.

شمروخ *ʃamruux* **1** /adj/ fully developed, strapping. – /n pl *ʃamariix*/ **2** quarterstaff, long cudgel. **3** single stalk (of dates). **4** male inflorescence (of a palm). **5** teardrop pendant (in jewelry). **6** *[coarse slang]* penis, dick.

ش م ر د

شمورد *ʃamurd* (also *ʃamurt*) /adj invar/ young, half-grown (of chickens).

[1] ش م س

شمس *ʃams* (also *sams*↓) /fem n, pl *ʃumuus*/ **1** sun. *lamma f-ʃams[i] tiṭlaɛ mil-ɣarb* when the sun rises in the west (i.e., never). ‖*ʃams[i] w-ɋamar* sparkler(s). - *ɛadiww if-ʃams* albino. - *kull[i] waaḥid ɛaarif ʃams[i] daar-u tiṭlaɛ mineen [prov]* each man knows best about his own affairs. **2** sunlight, sunshine.

شمسة *ʃamsa* /n/ **1** place exposed to the sun, sunny spot. *ɋaaɛid fiʃ-ʃamsa* sitting in the sun. **2** /pl -*aat*/ *[theat]* light projector.

شمسية *ʃamsaaya* /n/ = *ʃamsa* **1**.

شمسي *ʃamsi* /adj/ pertaining to the sun, solar. *ʔil-magmuuɛa ʃ-ʃamsiyya*↑ the solar system. ‖*ṣuura ʃamsiyya*↑ photograph. - *ɛeef ʃamsi* thick, spongy bread which is left to rise in the sun (peculiar to Upper Egypt).

شمسيّة *ʃamsiyya* /n pl *ʃamaasi, ʃamsiyyaat*/ **1** parasol, sunshade, umbrella. ‖*ɛamal if-fiif ʃamsiyya* he fastened the shutters half-closed. - *kumm[i] ʃamsiyya* galabiya sleeve 55 centimetres in width. **2** round glass window or skylight (in a dome). **3** *[mus]* rosette, rose, ornamental device found on various stringed instruments (see Pl.J. 12, 26).

شمّوسة *ʃammuusa: ya ʃams[i] ya ʃammuusa xudi sinnit il-ḫumaar wi-haati sinnit il-ɣaruusa* children's jingle uttered on the occasion of losing a tooth.

شمّس *ʃammis* /vt/ to expose to the sun. *taʃmiis il-maraatib yimawwit il-baraʃiit* putting the mattresses out in the sun kills the fleas. - vn *taʃmiis*; ava/pva *miʃammis*.

اتشمّس *ʔitʃammis* or *ʔiʃʃammis* /vi/ **1** to get some sun, lie in the sun. *baɛd[i] ma niḫrit il-ʔarḍ[i] nsib-ha tiʃʃammis* after we plough the earth we leave it to get some sun. **2** to be exposed to the sun. - ava/iva *mitʃammis*.

[2] ش م س see ش م م ا س : *ʃammaas*

ش م ش ر

شماشيرجي *ʃamaʃirgi* <T *çamaşırcı*> /n pl -*yya*/ *[obsol]* valet.

ش م ش م

شمشم *ʃamʃim* /vi/ to sniff around. *ʃamʃim fil-ʔakl[i] w-saab-u* he sniffed the food and left it (uneaten). - vn *ʃamʃama*; ava *miʃamʃim*.

¶ *ʃamʃim ɛala* to go after, as in *raaḥ yiʃamʃim ɛala ʃwayyit ʔaxbaar* he went sniffing about for some news, *ʃamʃim ɛala banaat* to run after girls.

ش م ش و ن

شمشون *ʃamʃuun* /prop n/ Samson.

[1] ش م ط

شمط *ʃamaṭ (u)* /vt/ **1** to strike, hit. *ʃamaṭṭ-u ɛalɋa* I gave him a beating. **2** to charge (s.o.) an exorbitant price. *ʔil-bayyaaɛ min illi hina b-yuʃmuṭ iz-zabaayin ṣaḥiiḥ* the average vendor here really stings people. - vn *ʃamaṭaan, ʃamṭ*; ava *ʃaamiṭ*; pva *maʃmuuṭ*.

شمّاط *ʃammaaṭ* /n */ one who charges exorbitant prices.

اتشمط *ʔitʃamaṭ* or *ʔiʃʃamaṭ* /vi/ passive of *ʃamaṭ*. - iva *mitʃimiṭ*.

[2] ش م ط see ش م م و ط : *ʃammuuṭi*

[1] ش م ع

شمع *ʃamɛ* /n pl *ʃumuuɛ*/ **1** wax. *ʃamɛ[i] xitm* sealing wax. ‖*ʃamɛ iskandaraani* beeswax. **2** white powder coating a sugar-cane stalk around the node. – /coll n/ **3** candle(s). **4** sparking plug(s).

شمعة *ʃamɛa* /unit n, pl -*aat*/ **1** a candle. ‖*da ʃamɛa mnawwara* he's a beacon to all. - *ʃayil-luhum if-ʃamɛa* anxious to please them. - *daari ɛala ʃamɛit-ak [prov]* ≈ don't wear your heart on your sleeve. **2** a sparking plug. **3** *[elec]* candle (unit of light measurement). **4** motif in tent appliqué work (see Pl.H, 11). – /n pl *ʃimaɛ*/ **5** *[naut]* bitt, bollard, capstan.

شمعاية *ʃamɛaaya* = *ʃamɛa* 1.

شمعي *ʃamɛi* /adj/ waxen, waxy.

شمّاعة *ʃammaaɛa* /n pl -*aat*/ any of various devices on or by which clothes or cloths are hung (such as a coat-hanger, clothes cupboard, clothes horse, (towel) rack, clothes hook etc.).

شمّع *ʃammaɛ[1]* /vt/ **1a** to wax, put a wax coating on. ‖*ʃammaɛ il-fatla* ≈ he made off like greased lightning. **1b** to seal (with wax). *miʃammaɛ bi-famɛ aḥmar* sealed with red wax. **2** to deal a hard blow to. *ʃammaɛ*

ik-koora fig-goon he slammed the ball into the goal. - vn *taʃmiiɛ*; ava/pva *miʃammaɛ*.

مشمّع *miʃammaɛ* **1** /adj/ waterproof, water-repellent. *kulutt*^{i} *mʃammaɛ* (babies') plastic pants. **2** /coll n/ oil-cloth(s), (loosely) any waterproofed material (e.g., tarpaulin, waterproof sticking plaster, etc.). **3** /pl *-aat*/ unit noun of 2.

اتشمّع *ʔitʃammaɛ*^{1} or *ʔiʃʃammaɛ*^{1} /vi/ passive of *ʃammaɛ*^{1}. - iva *mitʃammaɛ*.

ش م ع ^{2}

شمّع *ʃammaɛ*^{2} /vi/ to become almost dry (of freshly-baked bread, and washing). - vn *taʃmiiɛ*; ava *miʃammaɛ*.

اتشمّع *ʔitʃammaɛ*^{2} or *ʔiʃʃammaɛ*^{2} = *ʃammaɛ*^{2}. - ava *mitʃammaɛ*.

ش م ع د –

شمعدان *ʃamɛidaan* /n pl *-aat*/ candlestick, candelabra.

ش م ل ^{1}

شمل *ʃimil (a), ʃamal (i)* /vt/ to include, comprise. *ʔil-fatuura b-tiʃmal kull il-mabiɛaat* the invoice includes all the sales. ‖*ʃamal ḥadd*^{i} *b-ɛenee* (or *b-karam-u*, or *b-ɛaṭf-u*) to treat someone well, look after someone's interest. - vn *ʃumuul, ʃaml, ʃamalaan*; ava *ʃaamil*; pva *maʃmuul*.

شمل *ʃaml* /n/ union, unity. *gamaɛ ʃaml-i-na* he united us, made us as one. *farraqna ʃaml-u-hum* we sowed discord among them, we made them disunited.

شملة *ʃamla* /n pl *-aat*/ scarf, shawl.

شامل *ʃaamil* /adj/ complete, comprehensive.

أشمل *ʔaʃmal* /el/ more/most comprehensive.

اشتمل *ʔiʃtamal* /vt and vi/ to include, comprise. *miʃtimil (ɛala) xamas ʔagzaaʔ* comprising five parts. - iva *miʃtimil, muʃtamilʔ*.

مشتملات *muʃtamalaatʔ* /pl n/ content(s).

ش م ل ^{2}

شمال *ʃimaal* **1** /n/ left (-hand side). *xallii-k ɛala ʃmaal if-ʃaariɛ* keep to the left-hand side of the street. *ṣifr*^{a} *ɛala f-ʃimaal* (zero written on the lefthand side) competely worthless. **2** /adj invar/ left, left-hand. *ʔin-naḥya f-ʃimaal min if-ʃaariɛ* the left-hand side of the street. **3** /adv/ to the left. *liff*^{i} *ʃimaal* turn left! *ʃimaal duur [mil]* left face! ‖*xad-ha ʃmaal* to go about things the wrong way. - *muxx-u mitrakkib ʃimaal* he's crazy. - *daxal fi-... ʃimaal* to attack (s.o.) with abuse, sarcasm, or biting criticism.

شمال *ʃamaal* /n/ north. *baḥr if-ʃamaal* the North Sea.

شمالي *ʃamaali* /adj */ northern.

ش م ل ل

شمللة *ʃamlala* /vn/ (display of) know-all manners, cocksureness.

شملول *ʃamluul* /pl *ʃamaliil*/ **1** /adj/ **1a** lively, quick. *ʔil-bint*^{i} *di lahluuba ʃamluula* this girl is clever, quick-witted. **1b** capably and vigorously pursuing many activities. **2** /n/ know-it-all, clever dick, smart aleck.

أتشملل *ʔitʃamlil* or *ʔiʃʃamlil* /vi/ to behave and act in a know-all manner, be smart-alecky. - ava *mitʃamlil*.

ش م م ^{1}

شمّ *ʃamm*^{i} *(i)* /vt/ **1** to smell, sniff. *ʃammeet riiḥit ḥaaga b-titḥiriq* I smelled the odour of something burning. *ʃamm ik-kukayiin xallaa-ni miskiin* cocaine-sniffing has made me wretched. ‖*ʃamm il-hawa* to go for a stroll, take a breath of fresh air. -*ʃamm*^{a} *ɛala qahr*^{i} *ʔiid-u [sarc]* to use E.S.P. -*ʃamm*^{i} *nafas-u* (1) to recover, catch one's breath, relax. (2) to start showing some spirit (of one who has been oppressed). -*ʃamm il-ḥaraara* it got a whiff of heat (i.e. it got barely hot). - *ʔin-naas bi-tʃimm-i-ni* people like me, people enjoy my company. -*ʃamm (il-xabar)* to get wind of something, as in *kull*^{i} *ma yʃimm*^{i} *(xabar) mufattiʃ bi-yiqfil* whenever he gets wind of an inspector he closes down. – /vi/ **2** to go off, spoil (of food; it is believed by some that such food has been sniffed at by a snake, thus becoming tainted with poison). **3** *[slang]* to cadge, sponge. *baqaa-lu sniin bi-yʃimm*^{a} *ɛaleena* he's been sponging off us for years. - vn *ʃamamaan, ʃamm*; ava *ʃaamim*; pva *maʃmuum*.

شمّ *ʃamm*^{2} /vn/ smelling. ‖*ʃamm in-nisiim* Egyptian spring festival and popular holiday on the Monday after Coptic Easter.

شمّة *ʃamma* /inst n, pl *-aat*/ a sniff, a whiff.

مشموم *maʃmuum* /adj/ spoiled. *ʔakl*^{i} *maʃmuum* spoiled food, food which has gone off. *maat min ʔakl*^{i} *maʃmuum* he died from (eating) bad food (for some, the explanation of such an occurrence is that a snake has sniffed the food thus tainting it with poison).

شمّام *ʃammaam*^{1} /n */ **1** narcotics sniffer. **2** cadger, sponger.

الشمّامة *ʔiʃ-ʃammaama* /prop n/ bogey-woman reputed to sniff at children with unclean faces and mouths, with the result that their faces come out in pustules (the possibility of a visit by her is accordingly used to coerce a child into keeping face and mouth clean).

مشمّ *miʃamm: xad(-u) ɛala miʃamm(-u)* to hustle (s.o., into action) without warning.
اتشم *ʔitʃamm* or *ʔiʃʃamm* /vi/ passive of *ʃamm*[1]. -iva *mitʃamm*.
انشمّ *ʔinʃamm* = *ʔitʃamm*. -iva *minʃamm*.
شمّم *ʃammim* /vt/ 1 to cause to smell. *ʔid-duktuur ʃammim-ha l-ɣaaz* the doctor had her smell the gas. ‖*ʃammimii-ha n-naar* give it a whiff of the fire (i.e. heat it briefly over the fire). -*ʃammim-u hawa* (1) to take (s.o.) out for a breath of air. (2) *[slang]* to kill (s.o.), get rid of (s.o.). 2 to render unconscious (with evil intent, by administering chloroform). -vn *taʃmiim*; ava *miʃammim*.
اتشمّم *ʔitʃammim* or *ʔiʃʃammim* /vi/ passive of *ʃammim*. -iva *mitʃammim*.

ش م م [2]
شمّام *ʃammaam*[2] /coll n/ (variety of) honeydew melon(s) (Cucumis dudaim).
شمّامة *ʃammaama* /unit n, pl -*aat*/ a melon (of the honeydew variety).

ش م م ا س
شمّاس *ʃammaas* <Syr> /n pl *ʃamamsa*/ *[Chr]* deacon.

ش م م و ط
شموطي *ʃammuuṭi: burtuqaan ʃammuuṭi* a thick-skinned type of orange which appears on the market toward the end of the season.

ش م ن د –
شمندورة *ʃamanduura* <T *şamandıra* from Gr> /n pl -*aat*/ buoy.

ش م ه و –
شمهورش *ʃamhuurif* /prop n/ Shamhurish, the king of all demons.

ش م و ا ه
شمواه *ʃamwaah* <Fr *chamois*> /n/ suede.

ش م ي [1]
شيمية *ʃimya* /n pl -*aat*/ eddy, whirlpool. -also *ʃiima*.

ش م ي [2] see ش ا م [2] : *ʃamiyya*

ش م ي ز
شميز *ʃimiiz* <Fr *chemise*> /n pl *ʃamaayiz*/ *[auto]* cylinder liner.

ش ن
شن *ʃin* <contraction of *ʃayʔin*>: *kull*[i] *ʃin-lu yiʃbih-in-lu [prov]* (everything has something resembling it) like to like, every Jack must have his Jill. see further under ش ي ء [2]

ش ن ب
شنب *ʃanab* /n pl -*aat*/ 1 moustache. *ʃanab-ak ʔatqal min ḥawagb-ak* (1) you've a fine moustache. (2) you're a grown man. ‖ *ʃanab-u yuqaf ɛalee ş-şaqr* (or *şaqreen*) (a falcon (or two falcons) could perch on his moustache) ≈ he has a thick and luxuriant moustache (regarded as a sign of virility). -*da biɛiid ɛan ʃanab-ak* ≈ that's beyond you. -*(ʔin ɛamalt*[i] *kida) ʔaḥlaq ʃanab-i* (if you manage that) I'll cut off my moustache - I'll eat my hat! -*mara b-ʃanab* a spineless man. 2 *[naut]* fender.

(ش ن ب ر)
شنبر *ʃambar*[1] <Fr *chambre*> /n pl *ʃanaabir*/ inner tube.
شنبر *ʃambar*[2] <P *chanbar*> /n pl *ʃanaabir*/ any of a variety of metal frames or surrounds (e.g., frame of a lens, watch bezel, steel ribbon (used in bulk packaging), piston ring).
شنبر *ʃambar*[3]: *xiyaar ʃambar* Indian laburnum (Cassia fistula) the pods of which are used to make a laxative. -*laḥm*[i] *ʃambar [non-Cairene]* = *kanduuz*. -*ʔil-filuus raaḥit ʃambar wi-ɛambar* the money went in a flash and for God-knows-what!

ش ن ت ف
شنتف *ʃantif* /vt/ to primp, preen. *miʃantifa ḥawagib-ha zayy*[i] *btuuɛ is-siima* primping her eyebrows like a film star. -vn *ʃantafa*; ava/pva *miʃantif*.
شنتوفة *ʃantuufa* /n pl -*aat, ʃanatiif*/ a tiny bit, a modicum.
اتشنتف *ʔitʃantif* or *ʔiʃʃantif* /vi/ 1 passive of *ʃantif*. 2 to preen oneself, primp. -ava/iva *mitʃantif*.

ش ن ت ي
شانتي *ʃantii* <*Chantilly* (in France)>: *kireem ʃantii* whipped cream.

ش ن ت ي –
شنتيان *ʃintiyaan* <T *çintiyan*> /n pl -*aat*/ *[obsol]* baggy trousers (worn by women as an undergarment).

ش ن ج
شنج *ʃannig* /vt/ to cause to have convulsions, cause

cramps or spasms in. *ʕil-imtiḥaan huwwa lli ʃannig-u* the exam was the thing that made him all uptight. *raqabt-i miʃanniga* I have a stiff neck. *ɛaṣab miʃannig* twitching nerves. - vn *taʃniig*; ava/pva *miʃannig*.

اتشنّج *ʕitʃannig* or *ʕiʃʃannig* /vi/ to have convulsions, have cramps or spasms. ‖*ma-tiʃʃannig-lii-ʃ* don't get in such a state with me! - vn *taʃannug*; ava *mitʃannig*.

تشنّج *taʃannug* /n pl *-aat*/ spasm, convulsion. ‖*taʃannug ɛaṣabi* epilepsy.

ش ن ج ا ر

شنجار *ʃingaar* <Engl> /n pl *ʃanagiir*/ shinguard.

ش ن ج ى

شنجى *ʃingi* <T *üçüncü*> /n/ third one in a series.

ش ن د

شند *ʃind* /n pl *ʕiʃnaad, ʃunuud/ [naut]* first and principal transverse timber supporting the half-deck of a Nile sailing boat.

ش ن د ل

شندل *ʃandil* /vt/ to get (s.o.) into a muddle. - vn *ʃandala*; ava/pva *miʃandil*.

اتشندل *ʕitʃandil* or *ʕiʃʃandil* /vi/ to get into a muddle. - ava *mitʃandil*.

ش ن ش see ش ن ى ش : *ʃiniiʃa*

ش ن ش ن

شنشن *ʃanʃin* /vi/ **1** to produce a sound which reveals a defect in the constituent material (e.g., buzzing of a cracked lute, sound of badly-cast metal when tapped). **2** to jingle, rattle. - vn *ʃanʃana*; ava *miʃanʃin*.

مشنشن *miʃanʃin* /adj/ falling apart, dilapidated. *ɛarabiyya mʃanʃina* rattle-trap car.

ش ن ط [1]

شنط *ʃanaṭ (u)* /vt/ to tie firmly. *ʃanaṭ ʕiday-ya bil-ḥabl* he bound my wrists together with the rope. - vn *ʃanṭ*; ava *ʃaaniṭ*; pva *maʃnuuṭ*.

شنيطة *ʃineeṭa* /n/ loop. *rabaṭ-if-firiiṭa ɛuqda w-ʃineeṭa* he tied the ribbon in a bow.

اتشنط *ʕitʃanaṭ* or *ʕiʃʃanaṭ* /vi/ to be tied firmly. - iva *mitʃiniṭ*.

انشنط *ʕinʃanaṭ* = *ʕitʃanaṭ*. - iva *minʃiniṭ*.

ش ن ط [2]

شنطة *ʃanṭa* <T *çanta*> /n pl *ʃunaṭ*/ **1** satchel, briefcase, handbag. **2** suitcase. ‖*tuggaar if-ʃanṭa* persons who traffic goods in suitcases between countries. **3** trunk or boot (of a car).

ش ن ط [3] see ش ن ى ط : *ʃiniiṭ*

ش ن ع

شناعة *ʃanaaɛa* /n/ hideousness. *tagriba f-muntaha ʃ-ʃanaaɛa* an absolutely horrible experience.

شنيع *ʃaniiɛ* /adj pl *ʃunaaɛ*/ terrible, frightful. *ḥadsa ʃaniiɛa* terrible accident. *wiʃʃ[i] ʃaniiɛ* hideous face. *da-nta ʃaniiɛ* you're terrible!

أشنع *ʔaʃnaɛ* /el/ more/most terrible.

شنّع *ʃannaɛ* /vi/ to speak slanderously. *ʃannaɛu ɛaleeha lamma ṭilɛit maɛaa* they slandered her when she went out with him. - vn *taʃniiɛ*; ava *miʃannaɛ*.

اتشنّع *ʔitʃannaɛ* or *ʔiʃʃannaɛ* /vi/ (impersonal) passive of *ʃannaɛ*. *ʔitʃannaɛ ɛalee ktiir* he was much maligned. - iva *mitʃannaɛ*.

ش ن ف [1]

شناف *ʃinaaf* /unit and coll n/ nose ring (attached to the outer side of a nostril).

شنّف *ʃannif* /vt/ to embellish (the nose) with a *ʃinaaf*. - vn *taʃniif*; ava/pva *miʃannif*.

اتشنّف *ʔitʃannif* or *ʔiʃʃannif* /vi/ passive of *ʃannif*. - iva *mitʃannif*.

ش ن ف [2]

شنف *ʃanaf (i)* <perh Copt> /vi/ to sniff, sniffle. - vn *ʃanf*; ava *ʃaanif*.

ش ن ف [3]

شنف *ʃinf* <Copt> /n pl *ʔiʃnaaf, ʃinaaf, ʃinuuf, ʃinúfa/* **1** flexible basket, hemp sack (generally used for carrying straw by donkey or camel). **2** *[rur]* dummy, oaf.

ش ن ق

شنق *ʃanaq (u)* /vt/ to execute by hanging. - vn *ʃanq*; ava *ʃaaniq*; pva *maʃnuuq*.

اتشنق *ʔitʃanaq* or *ʔiʃʃanaq* /vi/ to be hanged. - iva *mitʃiniq*.

شنّق *ʃannaq* /vt/ to hang (a number of people). - vn *taʃniiq*; ava *miʃannaq*.

اتشنق *ʔitʃannaq* or *ʔiʃʃannaq* /vi/ to be hanged (of a number of people). - iva *mitʃannaq*.

ش ن ك ح

شنكح *ʃankaḥ* /vi/ to become sloppy or unkempt. *bint[i] mʃankaḥa f-libs-a-ha* a sloppily dressed girl. - vn *ʃankaḥa*; ava *miʃankaḥ*.

اتشنكح ʔitʃankaḥ or ʔiʃʃankaḥ = ʃankaḥ. - ava mitʃankaḥ.

ش ن ك ر
شنكر ʃankar /vt/ [metal] to scribe, mark out. - vn ʃankara; ava/pva miʃankar.
شنكار ʃinkaar /n/ [metal] 1 trace, mark made in scribing. 2 (ʔalam) ʃinkaar scribing-tool, scriber.
اتشنكر ʔitʃankar or ʔiʃʃankar /vi/ passive of ʃankar. - iva mitʃankar.

ش ن ك ل
شنكل ʃankal <T çengel from P> /n pl ʃanaakil/ 1 hook. ʃankal iʃ-ʃibbaak window hook. ‖ bi-ylaʕʕab-ha ʕala ʃ-ʃanaakil he gives her a hard time. 2 technique in boxing or fighting, consisting of tripping the opponent (by using one's leg to hook the opponent's ankle). xad ʃankal he was tripped.
شنكل ʃankil /vt/ 1 to trip, trip up. 2 to hook open (e.g., a door or window). - vn ʃankala; ava miʃankil.
اتشنكل ʔitʃankil or ʔiʃʃankil /vi/ 1 to trip, be tripped. 2 to be hooked open. - ava/iva mitʃankil.

ش ن ن [1]
شنة ʃanna: ʃanna w-ranna hullabaloo and clamour. ʕamaluu-lu ʃanna w-ranna they made a big fuss over him, they made a lot of noise about him. raagil luh ʃanna w-ranna a man who creates a stir wherever he goes, i.e. a famous and glamorous man.

ش ن ن [2] see م ش ن ن : miʃanna

ش ن ه ف
شنهف ʃanhif /vi/ to sniffle (in crying). - vn ʃanhafa; ava miʃanhif.
اتشنهف ʔitʃanhif or ʔiʃʃanhif = ʃanhif. - vn tiʃanḥiif; ava mitʃanhif.

ش ن و ا ن
شنوان ʃinwaan <perh Fr chinois> /n/ Chinese-style carpet.

ش ن و ا ه
شنواه ʃinwaah <Fr chinois> /adj invar/ in the Chinese style.

ش ن ي
مشنى miʃanni: la mhanni wala mʃanni see hanna.

ش ن ى ر
شنيور ʃanyuur <prob Fr chignole> /n pl ʃanayiir/ [mech] drill.
شنير ʃanyar /vt/ [slang] to devastate, wipe out. ʔil-imtiḥaan da ʃanyar-ni that exam wiped me out. ʃanyart-u fil-munaqʃa I destroyed him in the discussion. - vn ʃanyara; ava/pva miʃanyar.
اتشنير ʔitʃanyar or ʔiʃʃanyar /vi/ [slang] to be devastated, be wiped out. ʔiz-zamaalik itʃanyar fil-matʃ[i] btaaʕ ʔimbaariḥ the Zamalek team was annihilated in yesterday's match. - iva mitʃanyar.

ش ن ى ش
شنيشة ʃiniiʃa /n pl ʃanaayiʃ/ 1 hole made in a wall during construction or installation (e.g., for fastening scaffolding to a wall). 2 niche.

ش ن ى ط
شنيط ʃiniiṭ: ʃiniiṭ il-ʕafariit the other end of the world, as in ʔhuwwa ḥa-ywaddii-k fi-ʃniiṭ il-ʕafariit he'll take you to God knows where!

ش ن ى ه
شينيه ʃineeh <Fr chiné> /adj invar/ tinted (of paper).

ش ن ى و ه
شينيوه ʃinyooh <Fr> /n pl -aat/ chignon.

ش ه ب
شهاب ʃihaabˆ /n pl ʃuhub/ shooting star, meteor.

ش ه ب ن –
شهبندر ʃahbandar <P shâh-bandar>: ʃahbandar it-tuggaar [obsol] chief merchant.

ش ه د [1]
شهد ʃihid (a) /vi/ to give evidence, attest. ʃihdu ʕalee they bore witness against him. miin ḥa-yiʃhad maʕaaya who will testify in my favour? ‖ miin yiʃhad lil-ʕaruusa (ʁeer ʔumm-a-ha) [prov] (who will testify to the (beauty of the) bride other than her mother) ≈ testimony from an interested party is likely to be be biased. - vn ʃihaada, ʃahaada; ava ʃaahid; pva maʃhuud.
شهادة ʃihaada, ʃahaada /n/ 1 testimony. ‖ ʃihaadit ʔisbaat testimony for the prosecution. - ʃihaada zuur perjury. - ʔiʃ-ʃihaada li-llaah (witnessing belongs to God) said to strengthen a positive statement, as in ʔiʃ-ʃihaada li-llaah il-ʔakl[i] da ḥilw ≈ by God, that's good food! 2 ʔiʃ-ʃihaada (also ʔiʃ-ʃihadteen) the Muslim creed, i.e. laa ʔilaaha ʔilla llaah muḥammadun rasuulu

llaah there is no god but God (and) Muhammad is his Messenger. **3** /pl *-aat, ʃahaayid↓*/ **3a** diploma. **3b** certificate. *ʃihaadit milaad* birth certificate.

شاهد *ʃaahid*[1] /n pl *ʃuhuud, ʃuhhaad↓*/ **1** witness. *ʃaahid in-nafy* witness for the defence. *rabb-u-na ʃaahid* God is my witness, as God is my witness ...! — /pl *ʃawaahid*/ **2** indication, sign. **3** *[lit]* citation, quotation. **4** *[Isl]* gravestone, headstone. — **5** /no pl/ thirty-third or sixty-sixth bead on a *sibḥa*. **6** peg on the yoke of a plough (see Pl.D, 12).

¶ *ʕif-ʃaahid* to cut it short ..., as in *ʕif-ʃaahid ruḥt iʃtareet ɛarabiyya* in short, I went and bought a car.

شهيد *ʃahiid, ʃihiid* /n pl *ʃuhada, ʃuhadaaʕ*/ **1** martyr. *sanit if-ʃuhada* the year of the Martyrs (283 A.D. - the starting point of the Coptic calendar). **2** casualty. — /no pl/ **3** Bearer of witness (epithet of God).

مشهد *maʃhad* /n pl *maʃaahid*/ **1** scene. *ʕil-maʃhad il-xitaami* the final scene. **2** funeral procession. **3** shrine.

شهّد *ʃahhid* /vt/ **1** to call as a witness, call to testify. **2** to cause to witness. *ʃahhidt[a] ɛaleek ʕaxuu-k* I called your brother's attention to (what) you (have been doing). - vn *taʃhiid*; ava *miʃahhid*.

اتشهّد *ʕitʃahhid* or *ʕiʃʃahhid* /vi/ passive of *ʃahhid*. - iva *mitʃahhid*.

شاهد *ʃaahid*[2] /vt/ to observe, see, witness. *miin ʃaahid il-ḥadsa* who saw the accident? - vn *muʃahda, miʃahda*; ava *miʃaahid*.

مشاهد *muʃaahid* /n */ eyewitness, spectator, onlooker.

اتشاهد *ʕitʃaahid* or *ʕiʃʃaahid* /vi/ **1** to be seen, be observed. **2a** to bear witness to God and Muhammad, utter the *ʃihaada*. *ʕitʃaahid ɛala* to pronounce the *ʃihaada* over a dying person. ‖ *ʕiʃʃaahid ɛala nafs-ak* ≈ say your prayers! (i.e. I'm going to kill you). **2b** to utter the *ʃihaada* as an expression of relief. *ʕiʃʃahidna lamma d-duktuur waṣal* we were quite relieved when the doctor arrived. - ava/iva *mitʃaahid*.

استشهد *ʕistaʃhid* /vi/ **1** to seek a witness. *ʕistaʃhidt[i] bii* I called him as a witness. **2** to be martyred, die a martyr. - vn *ʕistiʃhaad*; ava *mistaʃhid*.

ش ه د [2]

شهد *ʃahd* /n/ **1** honey. *kalaam-u zayy if-ʃahd* ≈ butter wouldn't melt in his mouth. **2** /coll/ honeydew melon(s).

شهدة *ʃahda* /unit n, pl *-aat*/ a honey-dew melon.

شهداية *ʃahdaaya* = *ʃahda*.

ش ه ر [1]

شهر *ʃahr*[1] /n pl *ʕuʃhur, ʃuhuur, ʃuhúra*/ month. *talatt uʃhur* three months. *ʕif-ʃahr illi faat* last month. ‖ *ʃahr[a] ɛasal* honeymoon. *-ʃahr[a] ɛasal wi-ʃahr[i] baṣal* ups and downs.

شهرى *ʃahri* /adj */ monthly. *murattab ʃahri* monthly salary.

¶ *ʃahriyyan* /adv/ monthly.

شهريّة *ʃahriyya* /n pl *-aat*/ monthly pay, monthly wages.

مشاهرة *muʃahra* /adv/ monthly.

ش ه ر [2]

شهر *ʃahar (i)* /vt/ **1** to make famous. *ʕik-kitaab da ʃahar-u* that book made him famous. **2↑** to make a declaration of. *ʃahar ʕiflaas-u* he declared himself bankrupt. **3** to put a spell of barrenness on (a woman, by entering into her presence during the daytime of the forty-day period after her giving birth, carrying, e.g., jewels, fresh meat or the first-fruits of the season). - vn *ʃahr, ʃaharaan*; ava *ʃaahir*; pva *maʃhuur*.

شهر *ʃahr*[2] verbal noun of *ʃahar* 2. ‖ *ʕif-ʃahr il-ɛaqaari* the notary office, at which civil marriages and ownership of property are registered.

شهرة *ʃahra* /n pl *-aat*/ **1** instance noun of *ʃahr*[2]. **2** rash, skin eruption (thought to be caused by the evil eye).

مشهور *maʃhuur* /adj */ famous, well known.

شهرة *ʃuhra* /n/ fame, repute. *ʕil-furn[i] waaxid ʃuhra kwayyisa* the bakery has a good name. ‖ *ʕism[i] ʃuhra* professional name, or name other than a given name, by which one is known.

شهير *ʃahiir↑* /adj */ famous. ‖ *ʕif-ʃahiir bi-* (widely) known as ..., as in *ʕumm[i] kalsuum if-ʃahiira bis-sitt* Umm Kalthum, known as *ʕis-sitt*.

أشهر *ʕaʃhar*[1] /el/ more/most famous.

اتشهر *ʕitʃahar* or *ʕiʃʃahar* /vi/ **1** passive of *ʃahar*. **2** to become well known, become famous. - ava/iva *mitʃihir*.

انشهر *ʕinʃahar* = *ʕitʃahar*. - ava/iva *minʃihir*.

شاهر *ʃaahir* /vt/ = *ʃahar* 3. - vn *miʃahra, muʃahra*; ava *miʃaahir*.

اتشاهر *ʕitʃaahir* or *ʕiʃʃaahir* /vi/ passive of *ʃaahir*. - iva *mitʃaahir*.

أشهر *ʕaʃhar*[2] /vt/ **1** to profess, confess one's faith in. ‖ *ʕaʃharit ʕislam-ha* she became a Muslim. **2↑** to exhibit (s.th.) for sale. - vn *ʕiʃhaar*; ava *miʃhir, muʃhir*.

اشتهر *ʕiʃtahar* /vi/ to become famous. *ʕiṣ-ṣiɛiid bi-yiʃtihir bi-raqaṣaat il-ɛaṣaaya* Upper Egypt is famous for stick dances. - vn *ʕiʃtihaar*; ava *miʃtihir*.

ش ه ق [1]

شهق *ʃahaq, ʃihiq (a)* /vi/ **1** to catch one's breath, gasp (particularly when surprised or shocked). *ʃahaqit lamma ʃaafit ig-garḥ* she gasped when she saw the

wound. 2 to exert influence by means of the evil eye. *ʕinti b-tiʃhaqi ɛal-waad kida leeh* why are you putting the evil eye on the boy (by, e.g., gasping in admiration at him)? - vn *ʃahaqaan, ʃahq, ʃahiiq*; ava *ʃaahiq*.
شهقة *ʃahqa* /n pl *-aat*/ 1 instance noun of *ʃahq*. 2 rash, skin eruption (thought to be caused by the evil eye).
شهيق *ʃahiiqˀ* /n/ inhalation. *bi-yaaxud ʃahiiq* he takes a breath.

² (ش ه ق)
شاهق *ʃaahiq* /adj/ tall, towering, lofty.
شاهق *ʃaahiq* /adj/ intense, bright (of colours). *ʕabyaq ʃaahiq* an intense white, a dazzling white.

ش ه ل
شهل *ʃihil (a)* /vi/ to become lively, come alive. *ʕiʃhal ʃiwayya* get a move on! - vn *ʃahalaan*; ava *ʃaahil*.
شهّل *ʃahhil* 1 /vt/ to speed up, hurry up. *ʃahhili l-ʕakl[i] ʃwayya* hurry up the food a bit. ‖*ʃahhil-ni ʕana l-ʕawwil* attend to my business first. 2 /vi/ to hurry. *ʃahhil fiʃ-ʃuɣl[a] ɛaʃaan yixlaṣ badri* he worked fast in order to finish early. - vn *taʃhiil*; ava/pva *miʃahhil*.
اتشهّل *ʕitʃahhil* or *ʕiʃʃahhil* /vi/ 1 to be hurried. 2 to hurry, be in a hurry. - ava/iva *mitʃahhil*.

ش ه م
شهم *ʃahm* /adj invar/ gallant, decent, gentlemanly.
شهامة *ʃahaama* /n/ gallantry, decency.

ش ه ن ا ز
شهناز *ʃahnaaz* <P *shah-nâz*> /n/ *[mus]* (name of the note) C sharp.

ش ه و see ¹ ش ه ى : *ʃahwa, ʃahwaani*

¹ ش ه ى
شهوة *ʃahwa* /n pl *ʃahawaatˀ*/ desire, lust.
شهواني *ʃahwaani* /adj/ lustful, carnal.
شهي *ʃahi* /adj/ delicious, appetizing.
شهيّة *ʃahiyya* /n/ 1 appetite. *ma-luu-ʃ ʃahiyya lil-ʕakl* he has no appetite for food. *ʃaatiḥ iʃ-ʃahiyya* appetizer. 2 orgasm.
أشهى *ʔaʃha* /el/ more/most appetizing, delicious etc.
شهّى *ʃahha* /vt/ to awaken desire or appetite in (s.o.). - vn *taʃhiyya*; ava *miʃahhi*.
مشهّيات *muʃahhiyyaat* /pl n/ hors d'oeuvres.
اتشهّى *ʕitʃahha* or *ʕiʃʃahha* /vi/ passive of *ʃahha*. - iva *mitʃahhi*.
اشتهى *ʕiʃtaha* /vt/ to desire, have an appetite for, crave. *ɛaʕ-ʕarabeeza fii kull[i] ma tiʃtihii n-nafs* there is everything on the table your soul could desire. - vn *ʕiʃtiha*; ava *miʃtihi*.

² ش ه ى see ش ا ه ى : *ʃaahi*

ش و ا ل
شوال *ʃuwaal, ʃiwaal* <P *juwâl*> /n pl *-aat, ʃiwíla, ʃiwla*/ 1 large sack. *ʃiwaal dura* sack of corn. ‖*raagil zayy iʃ-ʃuwaal* a man without a will of his own. 2 plain loose dress (e.g., maternity pinafore).

¹ ش و ب
شايبة، شائبة *ʃayba* /n pl *ʃawaayib*/ blemish, impurity. *ʃawaayib fil-mayya* impurities in the water.

² ش و ب see ² ش ب ب : *ʃubb*

ش و ب ش
شوبش *ʃoobaʃ¹* /interj/ call for *nuqṭa* uttered by performers during celebrations (such as weddings).
شوبش *ʃoobaʃ²* /vi/ to call *ʃoobaʃ*. *qaɛad yiʃoobaʃ ma-ḥadd[i]-ʃ saʕal fii* he kept saying *ʃoobaʃ* but nobody paid any attention to him. - vn *miʃobʃa*; ava *miʃoobaʃ*.

ش و ت see ¹ ش و ط : *ʃaat, ʃoota, ʃawwit*

¹ ش و ح
شوّح *ʃawwaḥ¹* 1 /vt/ to cast, hurl, fling (over a large distance or area). ‖*ʃawwaḥ-ha min wara ḍahr-ak* don't worry about it! 2 /vi/ to wave, gesticulate. *miin illi b-yiʃawwaḥ hinaak da* who's that waving over there? ‖*ʃawwaḥ fi-wiʃʃ-i* he treated me without respect. - vn *taʃwiiḥ*; ava/pva *miʃawwaḥ*.
اتشوّح *ʕitʃawwaḥ¹* or *ʕiʃʃawwaḥ¹* /vi/ to be cast, hurled or flung (over a large distance or area). - iva *mitʃawwaḥ*.

² ش و ح
شوّح *ʃawwaḥ²* <perh Copt> /vt/ to sear (e.g., meat), sauté (e.g., vegetables, rice). - vn *taʃwiiḥ*; ava/pva *miʃawwaḥ*.
اتشوّح *ʕitʃawwaḥ²* or *ʕiʃʃawwaḥ²* /vi/ to be seared, be sautéed. - iva *mitʃawwaḥ*.

¹ ش و ر see also ء ش ر
شار *ʃaar¹ (u)* /vt/ to seek advice of. *laazim ʕaʃuur muḥaami fil-ḥikaaya di* I must seek the advice of a lawyer on this matter. - vn *ʃoora*; ava *ʃaayir*.
شار *ʃaar² (u, i)* /vi/ to give advice. *ʕil-muḥaami ʃaar ɛalayya ʕaruuḥ lil-maḥkama* the lawyer advised me to go to court. - vn *ʃoora*; ava *ʃaayir*.

شورة *foora* /n/ a piece of advice. *miin faar ɛaleek bif-foora l-mihabbiba-di* whoever gave you this rotten advice!

شارة *faara* /n pl *-aat*/ **1** badge, emblem. **2** *faraat* /pl n/ insignia.

شورى *fuura↑* /n/ consultation. *maglis if-fuura* advisory council.

مشورة *mafuura* /n/ consultation.

شوّر[1] *fawwar*[1] /vi/ to make a sign with the hand. *fawwar ɛala l-bahaayim timfi* he waved the livestock on. - vn *tafwiir*; ava *mifawwar*.

شاور *faawir* **1** /vt/ to consult, take counsel with. *kaan laazim tifawir-na qabl*[i] *ma titgawwiz* you should have consulted us before getting married. *ǧ-afaawir ɛaql-i* I'll think matters over. **2** /vi/ to gesture, make a sign with the hand. *fawir-lu ɛalayya mif-fibbaak* he pointed me out to him from the window. *fawir-li ɛala buqq-u yaɛni kaan raayiǧ yitɤadda* he pointed to his mouth meaning he was going to lunch. *huwwa mifaawir liiki* is he waving to you? - vn *mifawra*; ava *mifaawir*.

اتشاور *ʔitfaawir* or *ʔiffaawir* /vi/ to consult one another. - vn *tafaawur↑*; ava *mitfaawir*.

أشار *ʔafaar↑* /vi/ **1** to allude, refer. *ʔilli ʔafarna ʔilee saabiqan* that to which we alluded previously. **2** to give indication. *bi-tfiir lil-waqt* it indicates the time. **3** to give advice, make a recommendation. *ʔafaaru b-ʔeeh* what did they advise? - vn *ʔifaara*; ava *mufiir*; pva *mufaar*.

إشارة *ʔifaara* /n/ **1** /vn/ ‖ *silaaǧ il-ʔifaara [mil]* the signal corps. - *rahn ifart(-u)* at (s.o's) beck and call. **2** /pl *-aat*/ indicator, signal. *ʔifaarit ḍabaab* foghorn. *ʔifaarit (ɛarabiyya)* signal indicator (of a car). *ʔifaarit (muruur)* traffic-light. *ʔifaraat yadawiyya* hand signals. *ʔifaara tilliɤrafiyya* telegram. **3** /pl *ʔafaayir*/ **3a** sign. *ʔil-ǧubb*[i] *bi-ykun-lu ʔafaayir* (love has its signs) ≈ you can tell when someone is in love. **3b** mark, blemish (in magic). *ʔil-ʔasyaad ṭalbiin farxa min ɤeer ʔifaara* the spirits demand a hen without blemish (i.e., all of one colour, unmarked in any way).

أشارجي *ʔafargi, ʔifargi* /n pl *-yya*/ signalman. *ʔafargi fis-sikka l-ǧadiid* railway signalman. *ʔafargi muruur* traffic policeman.

مشير *mufiir* /n */ **1** field marshal (Br.), general of the Army (U.S.). **2** *mufiir baǧri* admiral of the fleet.

استشار *ʔistafaar* /vt/ to seek advice of, consult. ‖ *ʔallaah yilɛan illi faar wi-stafaar* God damn everyone who brought this business about (said, e.g., of an unhappy marriage). - vn *ʔistifaara*; ava *mistifiir, mustafiir*; pva *mustafaar*.

استشارة *ʔistifaara* /n pl *-aat*/ return visit to a doctor to check on the course of treatment prescribed as the result of a previous examination (usually without the payment of additional fees).

مستشار *mustafaar* /n */ **1** adviser, counsellor, consultant. **2a** *[leg]* judge of the Court of Appeal. **2b** *[dipl]* counsellor. **2c** *[pol]* chancellor.

ش و ر [2]

شوار *ʔiwaar* /n pl *-aat*/ trousseau (including furniture, furnishings and household equipment).

شوّر *fawwar*[2] /vt/ to provide (a bride) with the *ʔiwaar*. - vn *tafwiir*; ava/pva *mifawwar*.

اتشوّر *ʔitfawwar* or *ʔiffawwar* /vi/ to get together the *ʔiwaar* (of a girl about to be married). - ava *mitfawwar*.

ش و ر [3] see **م ش و ر**: *mifwaar, mafwar*

ش و ر ق see also **ش ر و ق**

شورق *fawraq* /vi/ to stoke a fire until the flames enter the *faruuqa*. - vn *fawraqa*; ava/pva *mifawraq*.

ش و ر م

شاورمة *fawirma* <T *çevirme*> /n/ sliced lamb grilled on a vertical spit.

ش و ر ى

شورى *fuuri* <T *şurî* from P> /n/ *[mus]* mode in Arabic music beginning on D and having E half flat and A flat. - see also *qarɣaɤaar*.

ش و ش [1]

شوش *fuuf* **1** /coll n/ corn tassel(s). **2** /n/ corn silk.

شوشة *fuufa* <Copt> /n pl *-aat, fuwaf, fawaafi*/ **1** /unit n/ a corn tassel. **2a** forelock. ‖ *waaqiɛ li-fuft-u* ≈ he's in up to his ears, he's in deep. **2b** crest (of a bird). **2c** top (of a tree).

ش و ش [2]

شوّش *fawwif* /vt/ **1** to blur, cause to be vague. *fikra mfawwifa* a confused idea. — /vi/ **2** to cause interference (in radio waves etc.). **3** to spread slanderous rumours. - vn *tafwiif*; ava/pva *mifawwif*.

تشويش *tafwiif↓* /n/ syphilis.

مشوّش *mifawwif* /adj */ syphilitic.

اتشوّش *ʔitfawwif* or *ʔiffawwif* /vi/ passive of *fawwif*. - iva *mitfawwif*.

ش و ش [3] see **ش و ى ش**: *ʔiweef, fuweef, fawiif*

ش و ش ر

شوشر *fawfar* /vi/ **1** to create interference. *ʔiş-şoot*

kiwayyis bass[i] fii ʃawʃara fiṣ-ṣuura the sound is fine but there's interference in the picture. *ʕaxuu-k bi-yzaakir ma-tʃawʃar-ʃ[i] ɛalee* your brother is studying, don't disturb him. **2** to spread slanderous rumours. - vn *ʃawʃara*; ava/pva *miʃawʃar*.

اتشوشر *ʕitʃawʃar* or *ʕiʃʃawʃar* /vi/ (impersonal) passive of *ʃawʃar*. *mitʃawʃar ɛaleehum* they are the victims of vicious slander. - iva *mitʃawʃar*.

[1] ش و ط

شاط *ʃaaṭ[1]* (also *ʃaat*) *(u)* <Engl *shoot*> /vt/ to kick, shoot, serve (a ball). *ʃaaṭ ik-koora fig-goon* he shot the ball into the goal. - vn *ʃawaṭaan, ʃooṭ*; ava *ʃaayiṭ*.

شوطة *ʃooṭa[1]* (also *ʃoota*) /inst n, pl *-aat*/ a kick, a shot, a serve.

شوّيط *ʃawwiiṭ* /n pl *ʃawwiiṭa*/ good kicker, good server (of a ball player).

انشاط *ʕinʃaaṭ* or *ʕiʃʃaaṭ* /vi/ to be kicked, shot, or served (of a ball). - iva *mitʃaaṭ*.

انشاط *ʕinʃaaṭ* = *ʕitʃaaṭ*. - iva *minʃaaṭ*.

شوّط *ʃawwiṭ* (also *ʃawwit*) /vi/ to kick, shoot, or serve repeatedly. *ʕil-huguum ik-kuwayyis laazim yiʃawwiṭ fig-goon* a good centre-forward must keep shooting at the goal. - vn *taʃwiiṭ*; ava *miʃawwiṭ*.

اتشوّط *ʕitʃawwiṭ* or *ʕiʃʃawwiṭ* /vi/ (impersonal) passive of *ʃawwiṭ*. *mitʃawwiṭ ɛaleeh kuwar kitiir* a lot of balls were shot at him (i.e. the goalie). - iva *mitʃawwiṭ*.

[2] (ش و ط)

شوط *ʃooṭ* /n pl *ʕaʃwaaṭ*/ **1a** half (in football match, hockey match etc.). **1b** set (in squash, tennis etc.). **1c** single race (in horse-racing). **1d** round (in a game). **2** (single) circumambulation.

شوطة *ʃooṭa[2]* <prob Copt> /n/ Newcastle disease (affecting fowls). ‖ *gat-ak ʃooṭa* ≈ a plague upon you!

شوّاطي *ʃawwaaṭi: lamba ʃawwaaṭi* simple oil-lamp without a chimney. (see Pl.B, 2).

ش و ف

شاف *ʃaaf (u)* /vt/ **1** to see, perceive. *ʃuft[i] bet-na g-gidiid* have you seen our new house? *ʕinta ʃayif-ni b-abaɛtar-hum* do I look to you as if I can afford to throw money around? *ɛala madad* (or *madd*) *if-ʃoof* as far as the eye can see. ‖ *nifuuf wiff-ak bi-xeer ʕin ʃaaʔ allaah* (phrase said to one or by one departing on a journey) ≈ God willing, we'll see you soon. *-ʃuft[i] baqa leeh ʕana ma-kunt[i]-ʃ ɛayz-ak tiruuḥ* do you see now why I didn't want you to go? *-ʃuuf (baqa)* see here, now, as in *ʃuuf baqa ʕik-kalaam da ma-yṣaḥḥ[i]-ʃ* see here, now, that sort of talk won't do! *-ʃuuf ya (ʕax-i* etc.) just imagine, would you believe it? as in *ʃuuf ya ʕax-i b-tidris il-yabaani* just imagine - she's studying Japanese! **2** to see, view. *ma-ʃuft[i]-ʃ il-film[i] da* I didn't see that film. *ʃayfa b-yiɛmil ʕeeh* can you see what he's doing? ‖ *la min ʃaaf wala min diri* ≈ very discreetly. **3a** to see, meet with. *ma-bi-nʃufuu-ʃ kitiir* we don't see him very often. *nifuf-kum baɛdeen* we'll see you later. **3b** to meet with, experience. *ɛumr-i ma-ʃuft il-maraḍ* I've never been sick. ‖ *ʕilaah-i ma-tʃuuf* ≈ may you never have to experience ..., God spare you .... **4** to deem right. *ʕilli bi-tʃuuf-u ʕinta* whatever you think is best. **5** to give attention to. *ʃuuf ḥaal-ak* look after yourself. *bi-yʃuuf ʃuxl-u kwayyis* he does his job well. *ʃuuf ʃuxl-ak* mind your own business! *laazim tiʃuuf maṣlaḥit il-ɛiyaal* you must look to the interest of the children. ‖ *kunt[i] b-aʃuuf mazaag-i kwayyis* I used to indulge myself (in everything). *-ʃaaf(-u) bi-ḥaaga* to give (s.o.) a gratuity or bribe, as in *ḥa-nʃuf-hum bi-ḥaaga ɛafaan yiktibu taqriir kiwayyis* we'll give them a little something so they'll write a good report. *-ʃaayif nafs-u* (or *rooḥ-u*) he is conceited. **6** to find, ascertain. *raagiɛ ʃuxl-i w-ʃuuf il-xalaṭaat illi ɛamalt-a-ha* go over my work and find out what mistakes I've made. *ʃuuf mawaɛiid is-sikka l-ḥadiid* look up the train schedules. ‖ *taɛaala ʕaʃuf-lak il-baxt* let me tell your fortune. **7** to find, secure. *ʃuf-lak faqqa w-ʕagib-lak ɛaruusa* find yourself an apartment and I'll get you a bride. *nifuuf lina ḥall[i] maɛaaha* let's try to work out something with her. *huwwa lli ʃaf-li wasṭa gamda* he's the one who got me some effective pull. ‖ *ʃuf-lak ʃoofa* do something about it, find yourself a way out. — /vi/ **8** to (be able to) see. *ma-bi-nʃuf-ʃ[i] fiḍ-ḍalma* we can't see in the dark. - vn *ʃawafaan, ʃoof*; ava *ʃaayif*.

شوفة *ʃoofa* /n pl *-aat*/ solution, way out.

اتشاف *ʕitʃaaf* or *ʕiʃʃaaf* /vi/ passive of *ʃaaf*. - iva *mitʃaaf*.

انشاف *ʕinʃaaf* = *ʕitʃaaf*. - iva *minʃaaf*.

شوّف *ʃawwif* /vi/ **1** to cause to see or view. **2** to cause to perceive or understand. **3** to cause to meet with or experience. - vn *taʃwiif*; ava/pva *miʃawwif*.

اتشوّف *ʕitʃawwif* or *ʕiʃʃawwif* /vi/ passive of *ʃawwif*. - iva *mitʃawwif*.

ش و ق

شوق *ʃooq* /n pl *ʕaʃwaaq*/ yearning, longing, desire.

شوّق *ʃawwaq* /vt/ **1** to excite curiosity in. *ʃawwaqt-i-ni liiha* you've roused my curiosity about her. **2** to arouse desire or longing in. ‖ *ʕil-buɛd[i] bi-yʃawwaq [prov]* ≈ absence makes the heart grow fonder. - vn *taʃwiiq*; ava *miʃawwaq*.

تشويق *tafwiiq* /n/ suspense.
تشويقي *tafwiiqi* /adj/ thrilling.
اتشوّق *ʔitfawwaq* or *ʔiffawwaq* /vi/ **1** to yearn, long. **2** passive of *fawwaq*. - ava/iva *mitfawwaq*.
اشتاق *ʔiftaaq* /vi/ to yearn, long. *ʔiftaaqit li-ʃumm-a-ha* she longed for her mother. - vn *ʔiftiyaaq*; ava *miftaaq*.

ش و ك
شوك *fook* /coll n/ **1** thorn(s), prick(s), spike(s), spine(s). ‖*bi-fook-u* brand-new. **2** thistle(s). **3** fish bone(s).
شوكة *fooka* /n pl *-aat*/ **1** /unit n/ a thorn, a splinter, a spine, a fish bone. **2** any of various objects having a thorn-like shape or a thorn-like part (e.g., awl, adjusting-pin on the blade of a plane, cut-out mechanism on the loom which operates when a thread breaks). *kurbaag bi-fooka* spiked whip. *lamba fooka* bayonet-mount light-bulb. *winʃ[i] b-fooka* fork-lift. — /pl *fiwak, fuwak*/ **3** (table) fork.
شوكي *fooki* /adj/ thorny. ‖*tiin fooki* cactus fruit, prickly pear(s), Barbary fig(s) (Opuntia tuna).
شوكي *fawki* /adj/ pertaining to the spine. *ʔin-nuxaaɛ if-fawki* spinal fluid. *ʔil-ḥumma f-fawkiyya [path]* meningitis.
شايك *faayik* /adj/ barbed. *silk[i] faayik* barbed wire.
شوّك *fawwik* /vt/ to prick, prickle. *ʔil-baṭṭaniyya fawwikit-u* the blanket prickled him. - vn *tafwiik*; ava/pva *mifawwik*.
اتشوّك *ʔitfawwik* or *ʔiffawwik* /vi/ to be pricked or prickled. - iva *mitfawwik*.

ش و ل [1]
شوّل *fawwil* /vi/ to dry up (of milk, fruit). *ʔil-laban fawwil fi-sidr-a-ha* her milk dried up. - vn *tafwiil*; ava *mifawwil*.
اتشوّل *ʔitfawwil* or *ʔiffawwil* /vi/ to dry up (of fruit, milk). *ʔif-fatla ɛayza ḍill[i] w-ruṭuuba ɛafaan ma-titfawwil-ʃ* the seedling needs shade and moisture so that it won't wither. - ava *mitfawwil*.

ش و ل [2]
شول *fawal* /n/ left-handedness.
أشول *ʔafwal* /adj, fem *foola*, pl *fuul*/ left-handed.

ش و ل [3]
شوّال *fawwaal* /prop n/ Shawwal, the tenth month of the Muslim year.

ش و ل [4] see ش و ا ل: *fuwaal, fiwaal*

ش و م [1]
شوم، شوْم *foom[1], fuum[1]* /n/ shameful disgrace. *ya ɛeeb if-foom [women in trad soc]* (1) shame! for shame! (2) O what a pity! how awful! *riggaalit if-fuum* men unworthy of the name.
شؤم *fuʃm* /n/ evil omen. *naas wiff[i] fuʃm* people of ill-omen.
مشؤوم *maʃʃuum* /adj */ ill-omened, ill-fated. *yoom maʃʃuum* an evil day. *naas maʃʃumiin* unlucky people.
اتشاءم *ʔitfaaʃim* or *ʔiffaaʃim* /vi/ to feel bad premonitions. *b-atfaaʃim lamma ʃafuuf-u* I get bad premonitions when I see him. - ava *mitfaaʃim*.
تشاؤم *tafaaʃum↑* /n/ pessimism.
متشائم *mutafaaʃim* /n */ pessimist.

ش و م [2]
شوم *fuum[2]* **1** /n/ a kind of hard wood. **2** /coll n/ quarterstaff(s), cudgel(s), (specifically, those used in Upper Egypt).
شومة *fuuma* /n pl *-aat, fiwam*/ quarterstaff, cudgel.

ش و ن
شونة *foona* <Copt> /n pl *fiwan, fuwan*/ storage place (especially for grain). ‖*ga naqb-u ɛala foona (faḍya) [prov]* (the hole he made led to an empty storeroom) ≈ his effort was in vain.
شوّن *fawwin* /vt/ to store, store up. - vn *tafwiin*; ava/pva *mifawwin*.
اتشوّن *ʔitfawwin* or *ʔiffawwin* /vi/ to be stored. - iva *mitfawwin*.

ش و ه
شوّه *fawwih, fawwah* **1** /vt/ to disfigure, deform. *mayyit in-naar fawwihit wiff-u* the nitric acid disfigured his face. **2** /vi/ to be defaced, be disfigured, be deformed. - vn *tafwiih*; ava/pva *mifawwih, mifawwah*.
تشويهة *tafwiiha* /n pl *-aat*/ a disfiguration, a deformity.
اتشوّه *ʔitfawwih* or *ʔiffawwih, ʔitfawwah, ʔiffawwah* /vi/ to be defaced, be disfigured, be deformed. - iva *mitfawwih, mitfawwah*.
تشوّه *tafawwuh↑* /n pl *-aat*/ disfigurement, deformity.

ش و ي [1]
شوى *fawa (i)* /vt/ to cook on coals or on a grill over coals or a fire. - vn *fawy, fayy*; ava *faawi*; pva *mafwi*.
مشويّات *mafwiyyaat* /pl n/ grilled foods.
شوّاية *fawwaaya* /n pl *-aat*/ grill, gridiron.
اتشوى *ʔitfawa* or *ʔiffawa* /vi/ passive of *fawa*. - iva *mitfiwi*.

² ش و ی

شويّة *ʃiwayya, ʃuwayya* /n pl *-aat*/ **1 an indefinite (but not large) number or quantity.** *ʕiddaa-li f-ʃiwayya lli kaanit ʕandu* he gave me the amount he had. *ħaat ʃiwayyit karaasi kutaar hina* bring a good number of chairs over here! *ʕandu ʃwayyit ṣuuf* he has some wool. *kull[i] ʃwayyit ʕayyaam* every few days. *ʕandi ʃwayyit bard* I have a slight cold. *ʃiwayya (bi-)ʃwayya* little by little, gradually. *(ʕandu) ʃeeʔ wi-ʃwayyaat* (he has) quite a bit. - /adjectivally/ *ʕaqil-u ʃwayya* he's not very bright. *baxt-u ʃwayya* he's not very lucky. **2 (short) period of time.** *baʕd[i] ʃwayya* after a while, after a little while. *kull[i] ʃwayya* (1) from time to time, every once in a while, as in *b-aruuħ hinaak kull[i] ʃwayya* I go there every now and then. (2) very frequently, as in *ma-tixbaṭ-nii-ʃ bi-kalaam-ak kull[i] ʃwayya* don't keep snapping at me! ‖ *ħa-yʏiib ʃiwayya* he'll be away for a bit (i.e. quite a while). — /adv/ **3 somewhat, a bit.** *bi-ṭariiqa ʕaħsan ʃiwayya* in a somewhat better way. *zaʕlaana ʃwayya* she's a bit upset. *ħagar kibiir ʃiwayya* a largish rock.

¶ *ʃiwayyiteen* /never used in constr/ = *ʃiwayya*.

استشوى *ʔistaʃwa* /vt/ to consider small. *ʔistaʃwa l-mahiyya* he thought the salary low. - vn *ʔistiʃwa*; ava *mistaʃwi*.

(ش و ی ش)

شويش *ʃiweeʃ, ʃuweeʃ: bi-ʃweeʃ* **1** slowly. *ʔitkallim bi-ʃweeʃ* speak slowly. **2** gently. *ḍarab-ni bi-ʃweeʃ* he tapped me. **3** quietly. *ʔidħak bi-ʃweeʃ* laugh (more) softly.

شاويش *ʃawiiʃ* <T *çavuş*> /n pl *ʃawiʃiyya*/ **1 sergeant. 2** form of address or reference to a policeman or soldier with a rank not higher than sergeant. *baʃʃawiiʃ* see ب ش .

ش ی

شي *ʃii* /interj/ cart-driver's call urging a horse to move ≈ giddup! ‖ *taxxan widn il-baʏl[i] b-ʔoolit ʃii [prov]* (flatter a mule by addressing him as if he were a horse) ≈ flatter gullible people by letting them think you have a high opinion of them.

¹ ش ی ء

شاء *ʃaaʔ (i)* /vt/ to will. *rabb-i-na ma-ʃaʔ-ʃ[i] lina r-raaħa* God didn't wish us to be comfortable. - vn *maʃiiʔa*; ava *ʃaayiʔ*.

¶ *ʔin ʃaaʔ allaah* or *ʔin ʃaaʔ allaah* God willing. *ħa-tsaafir ʔimta - ʔaaxir iʃ-ʃahr[i] ʔin ʃaaʔ allaah* 'When are you travelling?' 'End of the month, if all goes well.' *ħ-azur-ku bukra ʔin ʃaaʔ allaah* I will visit you tomorrow. - *ʔin ʃa-lla* (1) optative interjection. *ʔin ʃa-lla tzur-na ʕurayyib* I hope you'll visit us soon. (2) even if. *ʔiʃtirii-ha ʔin ʃa-lla titkallif miit gineeh* buy it even if it costs a hundred pounds! *yalla naakul kabaab - ʔin ʃa-lla ma-ħadd[i] ħawwiʃ* come on let's eat shish kebab - never mind the cost! - *ma ʃaaʔ allaah* or *ma ʃaaʔ allaah* prophylactic exclamation to ward off the evil eye (said upon seeing or hearing of something which excites one's admiration).

مشيئة *maʃiiʔa* /n/ will, wish. *kull-u b-maʃiiʔit illaah* or *kull-u b-maʃiiʔa* everything is subject to God's will.

مشلّة *maʃalla* /n pl *-aat*/ gold pendant with a Koranic inscription.

² ش ی ء

شيء *ʃeeʔ* /n pl *ʔaʃyaaʔ*/ thing. *kull[i] ʃeeʔ* everything. *ʃeeʔ ʔaħsan min la ʃeeʔ [prov]* a little is better than none. ‖ *biʃ-ʃeeʔ il-filaani* at great cost. - *raagil fii ʃeeʔ li-llaah* (1) a charitable man. (2) a psychic man. *sitt[i] fiiha ʃeeʔ li-llaah* (1) a charitable woman. (2) a psychic woman. 3 a loose promiscuous woman. - *ʕandu ʃeeʔ wi-ʃwayyaat* he's quite well-off, he has quite a bit.

أشيا *ʔaʃya: ʔil-ʔaʃya* (or *ʔaʃyit-(u)) maʕdan* things are fine, things are in good shape, as in *ʔaʃyit-hum maʕdan* they are doing well.

³ ش ی ء see ¹ ء ش ی : *ʔiʃi*

¹ ش ی ب

شاب *ʃaab² (i)* /vi/ **1** to turn grey or white (of hair). ‖ *ʔiḍ-ḍarb[i] xalla ʃaʕr-i ʃaab* the beating scared the daylights out of me. **2** to grow old, become grey-haired or white-haired. ‖ *baʕd[i] ma ʃaab wadduu l-kuttaab [prov]* after he had become an old man, they sent him to elementary school (said in respect of an action taken after its proper time). - vn *ʃayabaan, ʃeeb*; ava *ʃaayib*.

شايب *ʃaayib* **1** /adj/ verbal adjective of *ʃaab*. ‖ *ʃaayib wi-ʕaayib* (epithet of) a dirty old man. — /n/ **2** king (in cards). **3** card game equivalent to 'old maid'.

شيبة *ʃeeba* /n/ white hair, grey hair. ‖ *raagil ʕalee ʃeeba w-heeba* a wise and respected old man.

شيّب *ʃayyib* /vt/ **1** to cause (hair) to turn white or grey. **2** to cause (s.o.) to turn (prematurely) grey or white (of a frightening experience, troubles, worries, and the like). **3** to give (s.o.) a hard time. - vn *taʃyiib*; ava *miʃayyib*.

اتشيّب *ʔitʃayyib* or *ʔiʃʃayyib* /vi/ passive of *ʃayyib*. - iva *mitʃayyib*.

استشيب *ʔistaʃyib* /vt/ **1** to regard as (too) old, reject

because of old age. **2** to select (s.o.) for (his) old age. - ava *mistaʃyib*.

ش ی ب [2] see ش و ب : *ʃayba*

ش ی ب [3] see ش ا ب : *ʃaab [1]*

ش ی ت

شيت *ʃiit* <P *chît*> /n pl *-aat*/ chintz, flower-printed calico.

ش ی ح

شيح *ʃiiḩ* /n/ variety of wormwood.

ش ی خ

شاخ *ʃaax (i)* /vi/ **1** to grow old, age. **2** to become too old and hence inedible (of vegetables and fruits). - vn *ʃayxaan, ʃayxuuxa*; ava *ʃaayix*.

شيخوخة *ʃayxuuxa* /n/ old age.

شيخ *ʃeex* /n pl *ʃuyuux, maʃaayix*/ **1** title of, and form of address or reference to, a man who is of the Islamic professions (e.g., reciter of the Koran, head of a Sufi order), and to whom some religious status is attributed. *ʃeex il-ʕazhar* the Grand Sheikh of el-Azhar. *ʃeex maʃaayix iṭ-ṭuruq iṣ-ṣufiyya* the supreme head of all the Sufi orders in Egypt. ‖*kull[i] ʃeex wi-lu ṭariiqa [prov]* (every sheikh has his own order) ≈ everyone has his own way of doing things. - *ʕif-ʃeex il-biʕiid maqṭuuʕ nadr-u [prov]* ≈ out of sight, out of mind. - *ʕis-sitt[i] di ʃeex* (or *ʃeexa*) this woman is a simple soul. **2** title of respect to an older man. **3a** leader of a group. *ʃeex il-ʁafar* chief watchman. *ʃeex manṣar* (1) *[obsol]* leader of a criminal gang. (2) epithet for a clever cunning person, clever devil. *ʃeex il-balad* appointed government official in charge of a section of a village (formerly) the elected deputy to the *ʕumda*). *ʃeex ḫaara* a semi-official acting as a liaison officer between a police station and the inhabitants of a small section of a district (responsible for infant inoculations, draftees etc.). **3b** acknowledged mentor or master. *huwwa ʃeex il-mumassiliin* he's the Nestor of all actors. **4** tutelary or possession spirit. *wi-ḫayaat ʃeex di ...↓ [women]* by the spirit who inhabits this (e.g., drink of coffee) ....

¶ *la ya ʃeex* and *ya ʃeex* exclamation, addressed to a man, signalling (1) incredulous surpise. (2) amused or scoffing disbelief.

شيخة *ʃeexa* /n/ **1** /pl *-aat*/ professional female Koran reciter. **2** /pl *maʃaayix*/ leader of a *zaar* troupe.

¶ *la ya ʃeexa* and *ya ʃeexa* exclamation, addressed to a woman, signalling (1) incredulous surpise. (2) amused or scoffing disbelief.

شيّخ *ʃayyax* /vt/ **1** to address as *ʃeex*, treat with the deference due to an old person. **2** to cause (vegetables, fruit) to become hard and inedible. - vn *taʃyiix*; ava/pva *miʃayyax*.

اتشيّخ *ʔitʃayyax* or *ʔiʃʃayyax* /vi/ **1** passive of *ʃayyax*. **2** *[usu deris]* to follow a life of abstinence. - iva *mitʃayyax*.

استشيخ *ʔistaʃyax* **1** /vt/ to consider (s.o.) a simpleton. **2** /vi/ *[usu deris]* to follow a life of abstinence. - vn *ʔistiʃyaax*; ava *mistaʃyix*.

ش ی د

شيّد *ʃayyid* /vt/ to construct, erect, build. - vn *taʃyiid*; ava/pva *miʃayyid*.

اتشيّد *ʔitʃayyid* or *ʔiʃʃayyid* /vi/ to be constructed, be erected, be built. - iva *mitʃayyid*.

ش ی ش [1]

شيشة *ʃiiʃa [1]* <T *şişe*> /n pl *-aat, ʃiyaʃ*/ water-pipe (see Pl.I, 1).

شيّش *ʃayyiʃ* /vi/ to smoke a *ʃiiʃa*. - vn *taʃyiiʃ*; ava *miʃayyiʃ*.

(ش ی ش) [2]

شيش *ʃeeʃ* <P *shash*> /n/ **1** six (in dice etc.). ‖*ʃeeʃ beeʃ* half-blind. **2** sixth point on a backgammon board.

شيش *ʃiiʃ [1]* <T *şiş*> /n/ **1** foil. **2** fencing (as a sport).

شيش *ʃiiʃ [2]* /coll n/ shutters. ‖*ʃiiʃ ʔamrikaani* Venetian blinds.

شيشة *ʃiiʃa [2]: musmaar ʃiiʃa* short headless type of nail.

ش ی ط

شاط *ʃaaṭ [2] (i)* /vi/ to be scorched, be singed, burn. *nisiina r-ruzz[a] ʕan-naar ʃaaṭ* we forgot the rice on the fire so it burned. - vn *ʃayaṭaan, ʃiyaaṭ*; ava *ʃaayiṭ*.

شيّط *ʃayyaṭ* /vt/ to scorch, singe, burn. *ʃayyaṭ il-ʔamiiṣ bil-makwa* he scorched the shirt with the iron. - vn *taʃyiiṭ*; ava *miʃayyiṭ*.

ش ی ط ن

شيطان *ʃiṭaan* **1** /n pl *ʃayaṭiin*/ devil. ‖*ʔallaah yigaazi ʃṭaan-ak* that was very naughty of you! **2** *ʔif-ʃiṭaan* Satan, the Devil. *ʔif-ʃiṭaan liʕib bi-ʕaʔl-i* the Devil tempted me. *ʔif-ʃiṭaan ʃaaṭir [prov]* the Devil is very crafty ≈ temptation is difficult to resist.

شيطاني *ʃiṭaani* /adj/ wild, not cultivated (of plants). *ʔil-baṭṭiixa di ma-zaraʕna-haa-ʃ - di ṭalʕa ʃiṭaani* we didn't plant this water-melon, it just came up wild.

شيطن *ʃayṭan* /vt/ to cause to behave naughtily. - vn *ʃayṭana*; ava/pva *miʃayṭan*.
اتشيطن *ʔitʃayṭan* or *ʔiʃʃayṭan* /vi/ to behave naughtily. - ava *mitʃayṭan*.

ش ى ع
شاع *ʃaaɛ (i)* /vt/ **1** to spread, cause to become widespread. *ʔaṣḥaab-u ʃaaɛu xabar nagaaḥ-u* his friends spread the news of his success. — /vi/ **2** to spread, become widespread. *xabar nagaaḥ-u ʃaaɛ* news of his success got around. **3** to go wild, become uncontrollable. *di ʃaaɛit wala ḥadd[i]-ʃ ɛaarif yurudd-a-ha* she's running around as she pleases and no one can check her. - vn *ʃayaɛaan, ʃuyuuɛ*; ava *ʃaayiɛ*.
شيوعى *ʃiyuuɛi* or *ʃuyuuɛi* **1** /adj */ Communist. **2** /n */ a Communist.
الشيوعيّة *ʔiʃ-ʃuyuɛiyya* /n/ Communism.
مشاع *maʃaaɛ* /n/ joint or collective ownership. *ʔarḍ[i] (ɛal-)maʃaaɛ* jointly-held land.
شيّع *ʃayyaɛ* /vt/ **1** to send out, dispatch. *ʃayyaɛuu-ni b-gawaab* they sent me with a letter. **2** to see off. *ʃayyaɛuu-ni lil-maḥaṭṭa* they saw me off to the station. ‖*ʃayyaɛ ganaaza↑* to participate in a funeral procession. - vn *taʃyiiɛ*; ava/pva *miʃayyaɛ*.
اتشيّع *ʔitʃayyaɛ* or *ʔiʃʃayyaɛ* /vi/ passive of *ʃayyaɛ*. - iva *mitʃayyaɛ*.
إشاعة *ʔiʃaaɛa* /n pl *-aat*/ rumour.
أشاعة *ʔuʃaaɛa↓* see ش ع ع
استشاع *ʔistaʃaaɛ* /vi/ to become filled with rumours or gossip. *ʔil-ḥaara kull-a-ha stafaaɛit bil-mawḍuuɛ bitaɛ-na* the whole neighbourhood became full of gossip about this business of ours. - ava *mistiʃaaɛ*.

ش ى ك [1]
شيك *ʃiik[1]* <Fr *chic*> /adj invar/ chic, elegant.
أشيك *ʔaʃyak* /el/ more/most chic or elegant.
شياكة *ʃiyaaka* /n/ chic, elegance.
شيّك *ʃayyik* /vt/ to make chic, make elegant. *ʃayyikit il-ʔooḍa* she made the room look elegant. - vn *taʃyiik*; ava/pva *miʃayyik*.
اتشيّك *ʔitʃayyik* or *ʔiʃʃayyik* /vi/ to become or be made chic, make oneself smart. - ava/iva *mitʃayyik*.

ش ى ك [2]
شيك *ʃiik[2]*, *ʃeek* <Fr *chèque*> /n pl *-aat*/ (bank) cheque.

ش ى ك [3] see ش و ك : *ʃaayik*

ش ى ل [1]
شال *ʃaal[3] (i)* (vt) **1** to carry, bear. *huwwa tqiil ɛaʃaan tiʃiil-u* he's too heavy for you to carry. *ʃaal masʔuliyyit ʔixwaat-u* he bore the responsibility for his brothers. *ʃaayil id-dinya ɛala dmaaʏ-u* ≈ he is carrying the burdens of the world on his shoulders. *bi-yʃiil il-ɛeela kull-a-ha* he supports the whole family. ‖*ɛala qafa min yiʃiil* abundant, plentiful, as in *ʔayyaam zamaan kaan ir-ruzz[a] ɛala qafa min yiʃiil* in the old days rice was plentiful. *-ʃaal wi-ḥaṭṭ[i] f-nafs-u* he was offended, he took it to heart. *-ʃaayil ɛabd il-qaadir* see *qaadir*. **2** to remove. *ʃiil il-ḥagaat min ɛaṭ-ṭarabeeza* clear the things off the table. *ʃaal il-kulfa* he dispensed with formality. *ʃiil il-mablaʏ da min il-ḥisaab* deduct that amount from the account. **3** to lift, pick up. *ɛayziin winʃ[i] yʃiil is-sanduuq* we need a winch to lift the crate. ‖*gibaal ʃalit-hum wi-gbaal ḥaṭṭit-hum* (mountains picked them up and others put them down) ≈ (in story-telling) they had a long and arduous journey. *-ʃaalit il-beet* she cleaned the house from top to bottom. **4** to accommodate. *ɛawziin ṣaala tʃiil tultumiit nafar* they want a hall which can accommodate three hundred people. **5** to hold in custody, put in safe-keeping. *ʔiṣ-ṣarraaf bi-yʃiil il-filuus* the cashier keeps the money. *ḥ-atʔaxxar - bass[i] ʃil-li naṣiib-i* I'll be late, but keep my share for me. *ʔana ʃayl-u liz-zaman* ≈ I'm saving it for a rainy day. - vn *ʃeel, ʃayalaan*; ava *ʃaayil*.
¶ *ʃaal min* (or *li-*) to bear a grudge. *tikuun lissa ʃaayil minni* do you perhaps still bear me a grudge?
شيلة *ʃeela* /n/ **1** /pl *-aat*/ instance noun of *ʃeel*. *ʃeela beela* heave-ho! **2a** /pl *-aat, ʃiyal*/ (physical) load, burden. **2b** /pl *ʃiyal*/ (mental) load, burden.
شيّال *ʃayyaal* /n */ **1** porter. **2** loader.
شيّالة *ʃayyaala* /n pl *-aat*/ **1** *[non-Cairene]* spoon, scoop. **2** *[print]* small press elevators.
شيّالى *ʃayyaali* /adj invar/ portable.
اشتال *ʔiʃtaal [non-Cairene]* = *ʃaal*. - ava *miʃtaal*.
مشال *maʃaal* /n pl *-aat*/ carrying charge, freightage.
اتشال *ʔitʃaal* or *ʔiʃʃaal* /vi/ passive of *ʃaal[3]*. ‖ *ʔitʃaal wi-thabad* see *ʔithabad*. - iva *mitʃaal*.
انشال *ʔinʃaal* = *ʔitʃaal*. - iva *minʃaal*.
شيّل *ʃayyil* /vt/ to cause or help to carry or bear. *ḥumaar rukuuba ma-bi-nʃayyil-uu-ʃ* we don't make a riding donkey carry loads. ‖*ʃayyil-ni w-ʔaʃayyil-ak [prov]* ≈ you scratch my back and I'll scratch yours. - vn *taʃyiil*; ava/pva *miʃayyil*.
اتشيّل *ʔitʃayyil* or *ʔiʃʃayyil* /vi/ passive of *ʃayyil*. - iva *mitʃayyil*.

ش ى ل [2] see ش ا ل : *ʃaal[1], ʃaal[2]*

ش ل ا ن see ش ى ل ا ن

(ش ی م)
شيمة *ʃiima* /n/ **1** /pl *-aat*/ eddy, whirlpool. - also *ʃimya*. **2** /pl *ʃiyam*/ habit.
مشيمة *maʃiima* /n pl *maʃaayim*/ afterbirth (of animals). - also *baʃiima*.

[1] ش ی ن
شان *ʃaan (i)* /vt/ to discredit. *ma-fii-ʃ ħaaga tʃiin-u* nothing can be said against it, it is immaculate. - vn *ʃayanaan*; ava *ʃaayin, ʃaaʕin↑*.
شين *ʃeen↓* /adj */ *[non-Cairene]* **1** ugly. **2** cruel.

[2] (ش ی ن)
شين *ʃiin* /fem n, pl *-aat*/ thirteenth letter of the Arabic alphabet.
شيني *ʃiini* <Fr *Chine*>: *ħibr[i] ʃiini* Indian ink.

ص

ص ا

صا *ṣaa* /fem n/ fourteenth letter of the Arabic alphabet. - also *ṣaad, ṣah*.

ص ا ج

صاج *ṣaag* <T *sac*> /n/ **1** sheet metal, sheet steel. *ʕilba ṣaag* tin can. *baab ṣaag* roll-down metal shutter. **2** /pl *-aat, ṣigaan*/ baking sheet.

صاجة *ṣaaga* /n pl *-aat*/ **1** steel sheet. **2a** finger cymbal. **2b** jingle of a tambourine.

ص ا د

صاد *ṣaad*[1] /fem n, pl *-aat*/ fourteenth letter of the Arabic alphabet. - also *ṣaa, ṣah*.

ص ا ص see ص ص ى : *ṣaaṣa*

ص ا غ[1]

صاغ *ṣaaʁ* (also *ṣaʁaquul ʃavaasi*) <T *sağ kol ağası*> /n pl *-aat*/ *[mil, obsol]* rank between captain and major (replaced by rank of *raaʃid*).

ص ا غ[2] see س ا غ

(ص ا ل)

صال *ṣaal* <T *sal*> /n pl *-aat*/ *[naut]* floating pontoon.

صالة *ṣaala* <It *sala*> /n pl *-aat*/ hall of a house or flat, often furnished as a living room. *ʃif-faqqa ʃoqteen wi-ṣaala* the flat has two rooms and a hall. **2** large room, public room, hall. *ṣaalit mazaad* auction room. *ṣaalit gumruk* customs hall. *ṣaalit ʕarḍ* (1) showroom, exhibition hall. (2) projection room. **3** stalls, orchestra seats (in a cinema). **4** *[obsol]* cabaret. *ṣaalit raqṣ* dance hall. ‖ *da beet miʃ ṣaala* ≈ this is a respectable house.

ص ء ب see س ب ن : *sibaan*

ص ب ا see ص ب ى : *ṣaba*

ص ب ا ب

صباب *ṣubaab* <Fr *soupape*> /n pl *-aat*/ *[auto]* valve. *ṣubaab ʃakmaan* exhaust valve.

ص ب ب[1]

صبّ *ṣabb*[1] *(u)* /vt/ **1** to pour, pour out. *ṣabbit iʃ-ʃaay* she poured out the tea. ‖ *markib ṣabb* bulk carrier. **2** to cast. *bi-nṣubb id-dirs*[i] *min id-dahab* we cast the tooth in gold. — /vi/ **3** to pour forth, stream. *baqa d-damm*[i] *yṣubb*[i] *min qurt-u* blood was gushing from his forehead. - vn *ṣabb, ṣababaan*; ava *ṣaabib*; pva *maṣbuub*.

صبّ *ṣabb*[2] /adj invar/ **1** solid, pure, unmixed. *dahab ṣabb* solid gold. *ʃil-baab xaʃab ṣabb* the door is solid wood. *laḥma ṣabb* lean, boneless meat. *ʃil-ʕeeʃ qamḥ*[i] *ṣabb* the bread is one hundred percent wheat. ‖ *dimaaʁ-u ṣabb* he is stubborn. - *ʕeeʃ ṣabb [rur]* all-maize bread. **2** cast. *ḥadiid ṣabb* cast iron. *timsaal ṣabb* a cast statue.

صبّة *ṣabba*[1] /inst n, pl *-aat*/ **1** single casting or pouring operation. *ʃil-ʃasmant illi ʕandina ḥa-ykaffi talat ṣabbaat* we have enough cement for three pourings. **2** cast, casting. *ʃiṣ-ṣabba ṭilʕit mibaxbaxa* the casting came out with air bubbles in it.

صبيب *ṣabiib* = *ṣabb*[2].

مصبّ *maṣabb, miṣabb* /n pl *-aat*/ estuary.

مصبّة *miṣabba* /n pl *-aat*/ outlet.

اتصبّ *ʃitṣabb* or *ʃiṣṣabb* **1** to be poured. **2** to be cast. *ʃir-ruṣaaṣ yiṣṣabb*[a] *ʕala ʃ-ʃakl illi-ḥna ʕayziin-u* the lead is cast in the shape that we want. - iva *mitṣabb*.

انصبّ *ʃinṣabb* = *ʃitṣabb*. - iva *minṣabb*.

اتصبّب *ʃitṣabbib* or *ʃiṣṣabbib* /vt/ to pour forth, drip

with (especially sweat). *kaan wiff-u b-yitṣabbib ɛaraq bi-sabab il-ḥarr* his face was dripping with sweat because of the heat. - ava *mitṣabbib*.

[2] ص ب ب

صبابة *ṣabaaba* /adv/ passionately (in love). *muxram ṣabaaba* head over heels in love.

[3] ص ب ب see ص ب ا ب : *ṣubaab*

ص ب ح

صبح *ṣibiḥ* or *ṣabaḥ (a)* /vi/ **1a** to begin a new day, enter upon morning. *ṣabaḥt*^{i} *mṣaddaɛ* I began the day with a headache. ‖ *tiṣbaḥ ɛala xeer* ≈ good night. - *ṣabaḥna w-ṣabaḥ il-mulk*^{i} *li-llaah* pious exclamation upon waking up in the morning ≈ a new day, by the grace of God! **1b** preverb signalling action in the morning. *nibayyit-hum fil-mayya w-niṣbaḥ nifil-hum* we leave them in water overnight and the next morning we take them out. **2a** to become. *ʕif-faayiɛ bi-muruur il-waqt*^{i} *b-yiṣbaḥ qaɛda* a fashion in time becomes the rule. *kaan fi-ḥaal wi-ṣabaḥ fi-ḥaal* ≈ his fortunes were dramatically reversed. **2b** preverb signalling inchoative action. *kaan ʕaɛma w-ṣabaḥ yifuuf* he used to be blind but now he can see. - ava *ṣaabiḥ*.

صابح *ṣaabiḥ* /adj */ fresh. *ʕil-fuul ṣaabiḥ* the beans have just been cooked. ‖ *ṣaabiḥ bi-ṣaabiḥ* in continuous fresh supply, as in *dayman nixbiz ṣaabiḥ bi-ṣaabiḥ* we always bake (bread) as we need it (we don't store any bread). *ʕiṣ-ṣaabiḥ raabiḥ ya fuul [vendor's cry]* ≈ it is the freshly cut broad beans that win the day!

صبح *ṣubḥ* /n/ **1** morning. *ʕiṣ-ṣubḥ* (1) in the morning. (2) this morning. ‖ *ma tquulu ya ṣubḥ* (do say 'O morning') it's too early in the day for this sort of trouble. - *ɛaṣ-ṣubḥ* first thing in the morning. - *min iṣ-ṣubḥ* (1) since the morning, as in *min iṣ-ṣubḥ*^{i} *l-ḥadd*^{i} *bil-leel* from morning till night. (2) for a long time, as in *ʕiḥna waqfiin mistanniin-ak min iṣ-ṣubḥ* we've been standing waiting for you for ages. **2** *[Isl]* early morning prayer.

صبحيّة *ṣubḥiyya* /n pl *-aat*/ morning, the first half of the day.

أصبح *ʕaṣbaḥ*^{1} /el/ **1** more/most genial or cheerful. **2** more/most fresh.

صباح *ṣabaaḥ* /n/ morning. ‖ *ṣabaaḥ il-xeer* or *ṣabaaḥ il-full* or *ṣabaaḥ il-qiʃta* etc. good morning. - *ṣabaaḥ in-nuur* reply to *ṣabaaḥ il-xeer* etc. - *ʕiṣ-ṣabaaḥ rabaaḥ* ≈ let's sleep on it.

¶ *ṣabaaḥan* /adv/ in the morning.

صباحة *ṣabaaḥa: min ṣabaaḥit rabb-i-na* from the very early morning.

صباحي *ṣabaaḥi* /adj/ morning, pertaining to the morning. *ḥafla ṣabaḥiyya* matinee, morning performance.

صباحيّة *ṣabaḥiyya* /n pl *-aat*/ **1** /in constr/ the day after, the following morning. *nuzur-kum ṣabaḥiyyit il-ɛiid* we'll visit you the day after the feast. *ṣabaḥiyyit il-ɛamaliyya* the day after the operation. **2** first morning after the wedding night. *ṣabaḥiyya mbarka ya ɛaruusa wi-nta ya ɛariis* a blessed morning to you, bride, and you, bridegroom! (traditional greeting on this occasion). **3** present, usually of food or money, given to a couple on the morning after their wedding-night.

¶ *min ṣabaḥiyyit rabb-i-na* from the very early morning. *min ṣabaḥiyyit rabb-i-na l-ḥadd il-maɤribiyya wi-ḥna nazliin fuɤl* we've been working (hard) from early morning till sun-set.

صبوح *ṣabuuḥ* /adj/ fresh and pleasant (of complexions). *wiff*^{i} *ṣabuuḥ* a genial face.

صبّاحي *ṣabbaaḥi* /adv/ (through the night) until morning. *zakirt*^{i} *ṣabbaaḥi* I studied until morning. *liɛibna bookar ṣabbaaḥi* we played poker until morning.

مصباح *miṣbaaḥ*↑ /n pl *maṣabiiḥ*/ lamp. *miṣbaaḥ kaaʃif* searchlight.

صبّح *ṣabbaḥ* /vt/ **1** to start the day for (s.o.). *ʕalla yṣabbaḥ-ak bil-xeer* may God give you a good morning! *ḥa-tṣabbaḥ-ni bil-xinaaq* will you bring me a quarrel first thing in the morning? **2** to approach (s.o.) first thing in the morning. *ma-ḥadd*^{i} *-ʃ ṣabbaḥ-na lissa* we haven't had any customers so far this morning (said by shopkeepers etc.). *la tṣabbaḥ-u wala tmassii* ≈ keep well away from him! — /vi/ **3** to say good morning. *daxalit min xeer ma ṭṣabbaḥ (ɛaleena)* she came in without saying good morning (to us). - vn *taṣbiiḥ*; ava *miṣabbaḥ*.

اتصبّح *ʕiṭṣabbaḥ* or *ʕiṣṣabbaḥ* /vi/ **1** to start the morning. *lissa ma-ṣṣabbaḥnaa-ʃ* we haven't had any business yet this morning (said by shopkeepers etc.). *ʕiṭṣabbaḥit bi-xnaaqa maɛa g-giraan* she had a quarrel with the neighbours first thing in the morning. *ya reet iṭṣabbaḥt*^{i} *b-fingaan qahwa* I wish I had started the day (properly) with a cup of coffee. ‖ *ʕiṭṣabbaḥ bil-xeer* good morning to you. **2** (impersonal) passive of *ṣabbaḥ* **3**. *da wiff*^{i} *yiṭṣabbaḥ ɛaleeh* is that the kind of face one would wish good morning to! - ava/iva *miṭṣabbaḥ*.

أصبح *ʕaṣbaḥ*^{2}↑ = *ṣibiḥ* 2.

اصطبح *ʕiṣṭabaḥ* /vi/ to start off the morning, encounter something first thing in the morning (such an encounter being regarded as an omen for the day). *ʕiṣṭabaḥt*^{i} *b-wiff*^{i} *ḥilw in-nahar-da* it made my day to see a pretty face this morning. *ʕiṣṭabaḥna b-beeɛa kwayyisa* we began the day with a good sale. ‖ *ʕiṣṭibiḥ* ≈ let's not have

this unpleasantness in the morning. - *ʔiṣṭibaaḥ-ak laban* (1) ≈ I'm delighted to have you as my first customer of the day (polite remark made by shopkeepers etc.). (2) may you have a good day. - vn *ʔiṣṭibaaḥ*; ava *miṣtibiḥ*.

اصطباحة *ʔiṣṭibaaḥa* /inst n, pl *-aat*/ a first encounter (with s.th. or s.o.) in the morning (regarded as an omen for the day).

استصبح *ʔistaṣbaḥ* /vt/ **1** to select for freshness. **2** to select (s.o.) for (his) pleasant features. — /vi/ **3** to start off the morning. - vn *ʔistiṣbaaḥ*; ava/pva *mistaṣbaḥ*.

استصباح *ʔistiṣbaaḥ* /vn/ ‖*ɣaaz il-istiṣbaaḥ* *[obsol]* street-lighting gas.

ص ب ر [1]

صبر ṣibir, ṣabar, ṣubur (u) /vi/ to act with patience, act with fortitude or endurance. *ʔuṣbur kamaan ʃiwayya* be patient a little longer! *m-aqdar-ʃ aṣbur ʕaleek ʔaktar min kida* I can't be patient with you any longer than that. *ḥa-tuṣbur ʕala l-muṣiiba di-zzaay* how will she be able to bear this calamity? *ṣibirt[i] w-nult* ≈ for being patient I was rewarded with achieving what I wanted. *ʔilli yiftihi l-ʕasal yuṣbur ʕala ʔarṣ in-naḥl* *[prov]* he who wants honey puts up with being stung by the bees. ‖*ṣibir ʕala nafs-(u)* to wait patiently, force oneself to be patient, as in *law ṣibirna ʕala nafs-i-na gumʕiteen ḥa-yiḍṭarr[i] ybiiʕ bit-tasʕiira* if we hold out for two weeks he'll be forced to sell at the officially fixed price. - vn *ṣabr*; ava *ṣaabir*.

صبر ṣabr[1] /n/ patience (in adversity), fortitude. *ʔiṣ-ṣabr[a] ḥaraq id-dukkaan* *[prov]* patience let the shop burn down. *da ṣabr[i] ʔayyuub* that is the patience of Job! *ʔiṣ-ṣabr[i] ṭariiq is-salaama* *[prov]* patience is the way to well-being. *ʔiṣ-ṣabr[i] muftaaḥ il-farag* *[prov]* patience is the key to relief (after distress). *ʔiṣ-ṣabr[i] ṭayyib bass illi yirḍaa-bu* *[prov]* patience is fine, but who can put up with it? ‖*ṣabr-ak ʕalayya* be patient with me! - *ʔiṣ-ṣabr[i] gamiil* ≈ don't be so impatient! - *ṣabr-u-kum bi-llaah* ≈ have patience!

صبور ṣabuur /adj */ patient (in adversity).

صبّر ṣabbar[1] /vt/ to give patience, help (s.o.) to be patient. *ʔallaah-yiṣabbar-ak ʕala balwit-ak* may God give you patience to bear your misfortune! - vn *taṣbiir*; ava/pva *miṣabbar*.

تصبيرة *taṣbiira* /n pl *-aat*/ snack.

اتصبّر *ʔitṣabbar[1]* or *ʔiṣṣabbar[1]* /vi/ **1** = *ṣibir*. **2** to be made patient. - ava/iva *mitṣabbar*.

ص ب ر [2]

صبر ṣabr[2] /n/ aloe.

صبّار ṣabbaar /coll n/ *[bot]* **1** succulent(s). **2** (loosely) cacti.

صبّارة ṣabbaara /unit n; pl *-aat*/ **1** any of various succulent plants, such as aloe or agave. **2** (loosely) cactus.

صبّير ṣubbeer /n/ *[bot]* Indian fig (Opuntia ficus-indica).

صبّر ṣabbar[2] /vt/ to embalm. *kaanu l-faraʕna yṣabbaru l-mayyitiin bi-ʔagza kimawiyya minha ṣ-ṣabr* the Pharaohs used to preserve the bodies of the dead by treating them with chemicals including aloes. ‖*waqfa mṣabbara* she is standing motionless. - vn *taṣbiir*; ava/pva *miṣabbar*.

اتصبّر *ʔitṣabbar[2]* or *ʔiṣṣabbar[2]* /vi/ **1** to be embalmed. **2** to become motionless. *ʔitṣabbar fi-waqfit-u* he stood motionless. - iva *mitṣabbar*.

ص ب ر [3] see ص ب و ر : *ṣabuura*

ص ب ر [4] see ب ص ر [1] : *ʔaṣbar*

ص ب ر ص

صبرص ṣabraṣ /vt/ *[naut]* to whip (the end of a rope). - vn *ṣabraṣa*; ava/pva *miṣabraṣ*.

ص ب ع

صباع ṣubaaʕ /n pl *ṣawaabiʕ*/ **1** finger. ‖*maftuuḥ ṣubaaʕ* (open by the width of a finger) just ajar. - *ḥiyya ṣawabʕ-ak zayy[i] baʕḍ-a-ha* (are all your fingers alike?) everybody is different. - *ʔakla taakul ṣawabʕ-ak waraaha* (a meal after which you will eat your fingers) a delicious meal. - *ṣawaabiʕ zeenab* type of confection sticky with honey. - *ḥaṭṭ[i] ṣbaaʕ-u* (or *ṣawabʕ-u*) *fiʃ-ʃaqq* (he put his finger in the crack) he gave up, he threw his hand in. - *ḥaṭṭ[i] ṣawabʕ-u (g-gooz) fi-ʕnee* he defied (him), he told (him) where to get off. **2** (also *ṣubaaʕ ir-rigl*) toe. *laqeet ḥaaga zayy il-faqfuuqa taḥt[i] ṣbaaʕ-i l-kibiir* I discovered a sort of blister under my big toe. **3a** roughly finger-shaped object. *ṣubaaʕ mooz* a banana. *ṣawaabiʕ biyaanu* piano keys. *ṣubaaʕ dinamiit* stick of dynamite. *ṣubaaʕ ruuj* a lipstick. *ṣubaaʕ ṭabaʃiir* stick of chalk. **3b** pen (in the jargon of pickpockets). **4** linear measurement equal to 3.125 centimetres.

صابع ṣaabiʕ = *ṣubaaʕ*.

صبّع ṣabbaʕ /vt/ to shape (dough, *kufta* etc.) into fingers. - vn *taṣbiiʕ*; ava/pva *miṣabbaʕ*.

مصبّع miṣabbaʕ /adj/ *[carp]* straight-grained (of wood).

اتصبّع *ʔitṣabbaʕ* or *ʔiṣṣabbaʕ* /vi/ to be shaped into fingers (of dough, *kufta* etc.). - iva *mitṣabbaʕ*.

ص ب غ see س ب غ: *ṣabaɣ, ṣabɣa, maṣbaɣa, ʕitṣabaɣ*

ص ب ن [1]

صابون *ṣabuun* <cf It *sapone*> /n pl *ṣawabiin*/ soap. *ṣabuun wiff* or *ṣabuun ḥammaam* or *ṣabuun tawalitt* toilet soap. *ṣabuun ɣasiil* laundry soap. *ṣabuun mawaɛiin* kitchen soap. ‖*ṣabuun il-ɛafriit* variety of fleabane (Gnaphalium luteo-album). -*ṣabuun il-ɣeeṭ* plant (Auagallis arvensis) of the primrose family, commonly found in fields and gardens. -*kull-u ɛand il-ɛarab ṣabuun [prov]* (it's all soap to the bedouins) ≈ it's all the same thing to those who know nothing.

صابونة *ṣabuuna* /n pl -*aat*/ bar of soap. ‖*ṣabuunit ir-rukba* kneecap. -*sanda ṣabuuna* convex dolly block.

صابونى *ṣabuuni* /adj */ pure white (of a horse).

صبّانة *ṣabbaana* /n pl -*aat*/ **1** shaving mug. **2** soapdish.

مصبنة *maṣbana* /n pl *maṣaabin*/ **1** soapdish. **2** *[obsol]* soapworks.

صبّن *ṣabbin*[1] /vt/ to soap, apply soap to. *furʃit it-taṣbiin* shaving brush. -vn *taṣbiin*; ava/pva *miṣabbin*.

اتصبّن *ʔitṣabbin*[1] or *ʔiṣṣabbin*[1] /vi/ to be soaped, be rubbed with soap. -iva *mitṣabbin*.

ص ب ن [2]

صبّانى *ṣabbaani* (also *ḥabl*[i] *ṣabbaani*) /n/ stout hemp rope used as a sling in the handling of heavy cargoes.

صبّن *ṣabbin*[2] /vt/ to handle (cargo etc.) in a sling. -vn *taṣbiin*; ava/pva *miṣabbin*.

اتصبّن *ʔitṣabbin*[2] or *ʔiṣṣabbin*[2] /vi/ to be handled in a sling. -iva *mitṣabbin*.

ص ب و see ص ب ى: *ṣabwa*

ص ب و ر

صابورة *ṣabuura* <Gr *sabouɾa*> /n/ ballast.

ص ب ى [1]

صبا *ṣiba* /n/ **1** youth, childhood. *kunt*[i] *f-ṣibaa-ya b-aftaɣal naffaal* I used to work as a pickpocket in my youth. **2** youth, youthfulness. *lissa baayin ɛaleeha ṣ-ṣiba* she still has the appearance of youth.

صبا *ṣaba* /n/ **1** *[mus]* mode in Arabic music beginning on D and having E half flat, G flat and B flat. **2** (*nasiim* or *nisiim) iṣ-ṣaba* mild easterly breeze, in poetry suggestive of one's love.

صبوة *ṣabwa* /adj pl -*aat*/ having spine or backbone, stout, solid. *da ṣabwa wala kull iṣ-ṣabwaat* this is the toughest of all the guys.

صبى *ṣabi* /n pl *ṣubyaan*/ **1** boy. *xallifit talat ṣubyaan* she gave birth to three boys. ‖ *ʕumm iṣ-ṣubyaan* demoness believed to snatch or injure children. **2** boy employed in a small business, assistant, apprentice. *kunt*[i] *b-aftaɣal ṣabi baqqaal* I used to work as a grocer's assistant. — /adj pl *ṣubyaan*/ **3** youthful, young-looking. *hiyya ṣaḥiiḥ ɋarrabit ɛal-xamsiin laakin lissa ṣabiyya* true she's approaching fifty but she's very young-looking.

صبيّة *ṣabiyya* /n pl *ṣabaaya*/ young girl.

أصبى *ʔaṣba* /el/ more/most youthful.

صبّى *ṣabba*[2] /vt/ to render youthful again. *xadit li-nafs-a-ha ʃabb*[i] *ṣɣayyar laakin faḥl*[a] *ɛaʃaan yiṣabbii-ha* she took a strong young lover to help her regain her youth. -vn *taṣbiyya*; ava *miṣabbi*.

اتصبّى *ʔitṣabba* or *ʔiṣṣabba* /vi/ to regain one's youth. *bi-ymiil li-mutaɛ if-ʃabaab - nifs-u yitṣabba* he inclines to youthful pleasures as he wishes to regain his youth. -iva *mitṣabbi*.

اتصابى *ʔitṣaaba* or *ʔiṣṣaaba* /vi/ to behave like a young person (of an older man or woman). -ava *mitṣaabi, mutaṣaabiʔ*.

استصبى *ʔistaṣba* /vt/ **1** to select for youth or youthfulness. **2** to consider young. — /vi/ **3** to behave like a young person. -ava *mistaṣbi*.

ص ب ى [2]

صبّى *ṣabba*[3] /vi/ to doze. *ɛeeb tuqɛud tiṣabbi wiḍ-ḍuyuuf ɋaɛdiin* it is impolite to keep nodding off while the guests are present. -vn *taṣbiyya*; ava *miṣabbi*.

ص ح ب

تصحب *tiṣḥab: tiṣḥab-ak is-salaama* may peace be with you.

صحبة *ṣuḥba* **1** /vn/ accompanying. *waṣal bi-ṣuḥbit ʔaxuu* he arrived accompanied by his brother. **2** /n/ company, companion(s). *ʔil-walad da* (or *ʔil-bint*[i] *di*) *ṣuḥba sayyiʔa* this boy (or girl) is a bad companion. **3** /n pl *ṣuḥab*/ bouquet, posy, bunch (of flowers).

صاحب *ṣaaḥib*[1] /n pl *ʔaṣḥaab, ṣuḥaab, ṣiḥaab, ṣaḥaaba, ṣuḥabaat*[↓]/ **1** (male) friend. **2** /in constr w foll n/ owner of, holder of, one with, one concerned with, one responsible for. *ṣaaḥib milk* property owner. *ṣaaḥib tawkiil* agency holder. *ʔaṣḥaab il-leela* those giving the party. *ṣaaḥib ɛamal* employer. *ṣaaḥib maraḍ* (or *ɛaya*) sickly person. *ʔaṣḥaab mihan* professional people. *ṣaaḥib keef* bon vivant. *ṣaaḥib mazaag* connoisseur. *ṣaaḥib il-galaala (l-malik)* His Majesty (the king). *ṣaaḥib is-simuww (il-malaki)* His (Royal) Highness. *ṣaaḥib il-faxaama* (or *is-saɛaada*) His Excellency. *ṣaaḥib il-faḍiila [Isl]* His Eminence. *ṣaaḥib il-qadaasa*

[Chr] His Holiness. *ṣaaḥib in-niyaafa [Chr]* His Grace. *ṣaaḥib baleen kaddaab wi-ṣaaḥib tlaata mnaafiq [prov]* ≈ one who tries to do two things at once is fooling himself, and he who tries to do three fools himself even more. — *ʕiṣ-ṣaḥaaba* /pl n/ **3** the Companions of the Prophet Muhammad.

صاحبة *ṣaḥba* /n pl *-aat*/ **1** (female) friend. **2** (female) owner, holder, the one with. *ṣaḥbit il-beet* the landlady. *ṣaḥbit ʕadab wi-kamaal* a polite, refined lady. *ṣaḥbit il-galaala* Her Majesty. see further under *ṣaaḥib*[1].

مصحوب *maṣḥuub*↑ /adj/ accompanied. *fii tafaaʕulaat maṣḥuuba b-daragaat ʕalya min il-ḥaraara* some reactions are accompanied by high temperatures. *maṣḥuub bis-salaama* may peace be with you ≈ goodbye.

صاحب *ṣaaḥib*[2] /vt/ **1** to befriend, make friends with. *miraat-i ṣaḥbit naas ʕaxlaq-hum wiḥʃa* my wife got into bad company. **2** to accompany. *ʕis-sitt*[i] *bi-tɣanni wi-ḥna bi-nṣaḥib-ha bil-ʕazf* the lady sings and we play the accompaniment. *ʕalaat muṣaḥba* accompanying instruments. - vn *miṣaḥba, ṣuḥubiyya*; ava *miṣaaḥib*.

صحوبيّة *ṣuḥubiyya* /n/ friendship.

اتصاحب *ʕitṣaaḥib* or *ʕiṣṣaaḥib* /vi/ **1** to make friendly overtures, strike up a friendship. *ʕana xaayif ʕinnaha mitṣaḥba ʕalayya ʕalaʃaan manfaʕit-ha* I'm afraid she's being friendly towards me out of self-interest. *ʕitṣaḥibna ʕala* (or *maʕa*) *baʕḍ*[i] *wi-ḥna fig-geeʃ* we became friends when we were in the army. **2** (impersonal) passive of *ṣaaḥib*[2]. *dool naas yitṣaaḥib ʕaleehum* are these the people to get friendly with! - ava/iva *mitṣaaḥib*.

ص ح ح

صحّ *ṣaḥḥ*[1] *(a)* /vi/ **1** to flourish, develop well. *ʕil-firaax ṣaḥḥu w-ma-mat-ʃ*[i] *minhum wala waaḥid* the chickens did fine and not one of them died. *tigart-u ṣaḥḥit wi-baqit ʕaal* his business grew and flourished. **2** to recover (one's health). *ʕil-ʕayyaniin ṣaḥḥu w-baqu ʕaal* the sick regained health and became quite well. **3**↓ to become attainable, come within reach. *kull illi yṣaḥḥ*[i] *lak ʕiʕmil-u* do all that comes within the range of your ability. *ʕin ṣaḥḥ*[i] *liyya ʕirʃeen ʕabqa ʕaʃtirii-li ʕamiiṣ* if I come by some money I will buy myself a shirt. *ʕin ṣaḥḥ il-ʕeeʃ yibqa l-baaqi ʃabraqa [prov]* (if the bread turns up, the rest (of the food) is (dispensable) luxury) ≈ keeping body and soul together does not require much. — *yiṣaḥḥ* (also *yiṣaḥḥ inn*) /preverb/ **4** to be fitting, be appropriate. *huwwa beeh kibiir wi-yṣaḥḥ*[i] *ykuun ʕandu ʕarabiyya* he's a very important man and it's quite reasonable that he should have a car. *ma-yṣaḥḥ*[i]*-ʃ tikallim-u kida* you shouldn't talk to him this way. **5** to be possible. *yiṣaḥḥ*[i] *tiigi dilwaqti* it is possible that she may come now. *yiṣaḥḥ innu ma-yurfuḍ-ʃ* it is possible that he won't refuse. - vn *ṣiḥḥiyya, ṣaḥaḥaan*; ava *ṣaaḥiḥ*.

صحّ *ṣaḥḥ*[2] /adj invar/ right, correct, proper. *ʕil-muwaṣafaat iṣ-ṣaḥḥ* the correct specifications. *ʕit-taṣarruf iṣ-ṣaḥḥ* the right thing to do. *ʕil-mudiir iṣ-ṣaḥḥ*[i] *b-yiʕmil kida* a real director acts in this way.

صحّة *ṣiḥḥa* /n/ **1** health, good health. *ṣiḥḥit-ak ʕaal* you are in excellent health. *ṣiḥḥit-i taʕbaana ʃwayya n-nahar-da* I'm not well today. ‖ *ʕizzayy iṣ-ṣiḥḥa* ≈ how are you? - *fi-ṣiḥḥit-ak* your health! cheers! - *bi-ṣiḥḥa w-ʕafya* ≈ may it bring health and strength (said to one eating or drinking). - *rabb-i-na yiddii-k iṣ-ṣiḥḥa* (may God give you health) kindly wish expressed to a person suffering from the effects of illness or age. - *wi-nta biṣ-ṣiḥḥa (wis-salaama)* and may you too be in good health (polite reply to the festival greeting *kull*[i] *sana wi-nta ṭayyib* ≈ may you be well at every recurrence of this annual celebration!). - *(maktab) iṣ-ṣiḥḥa* the local government health centre. **2** truth, integrity. *sabatit ṣiḥḥit kalaam-u* the truthfulness of his statement was established. **3** correct version. *ʕil-ḥikaaya di ṣiḥḥit-ha ʕinn*[i] *huwwa lli katab ig-gawaab miʃ hiyya* the correct version of the story is that it is he, not she, who wrote the letter.

صحّي *ṣiḥḥi* /adj */ sanitary, health-. *ʃahaada ṣiḥḥiyya* health certificate. ‖ *ʕadawaat ṣiḥḥiyya* bathroom fixtures. - *sabbaak ṣiḥḥi* domestic plumber.

¶ *ṣiḥḥiyyan* /adv/ healthwise. *laayiq ṣiḥḥiyyan* physically fit.

صحيح *ṣaḥiiḥ* /adj pl *ṣuḥaaḥ*/ **1** correct, true, proper. *kida ṣaḥiiḥ* is that (really) true? *ḥuṭṭ il-karaasi f-waḍʕ-a-ha ṣ-ṣaḥiiḥ* put the chairs in their proper place. *bi-ṣaḥiiḥ* really, truly, as in *ḥa-traggaʕ-u b-ṣaḥiiḥ* will you really return it? **2** whole. *ʕil-ʕasmaak bi-tiigi ṣḥiiḥa* the fish come whole. — /adv/ **3** really, truly. *da ṣaḥiiḥ kaddaab* he certainly is a liar, it's true that he's a liar.

أصحّ *ʕaṣaḥḥ*↑ /el/ **1** more/most correct, true or proper. *ʕala l-ʕaṣaḥḥ* or *bil-maʕna l-ʕaṣaḥḥ* more correctly, to be more precise. **2** more/most healthy.

إصحاح، أصحاح *ʕiṣḥaaḥ, ʕaṣḥaaḥ* /n pl *-aat*/ chapter (of the Scriptures).

مصحّة *maṣaḥḥa* /n pl *-aat*/ centre for convalescence and the treatment of mild illnesses.

صحّح *ṣaḥḥaḥ* /vt/ **1** to check, correct, amend. *ʕawraaq il-imtiḥanaat titsallim lil-ʕustaaz illi ḥa-yṣaḥḥaḥ-ha* the exam papers are handed over to the teacher who will correct them. *ʕil-birovaat tiruuḥ il-ʕawwal lit-taṣḥiiḥ*

the proofs first go to be proof-read. **2** to change (money) into higher denominations. *naas tiḥibb^{i} tfukk^{i} fluus wi-naas tiṣaḥḥaḥ-ha* some people like to change money into lower denominations, others into higher ones. - vn *taṣḥiiḥ*; ava/pva *miṣaḥḥaḥ*.

تصحيحة *taṣḥiiḥa* /inst n, pl *-aat*/ a (single) marking or correcting.

مصحّح *muṣaḥḥiḥ* /n */ **1** person who corrects examination papers. **2** proofreader.

اتصحّح *ʔitṣaḥḥaḥ* or *ʔiṣṣaḥḥaḥ* /vi/ **1** to be checked, corrected or amended. *ʔil-karariis il-miṣṣaḥḥaḥa ʕala maktab-i* the corrected exercise books are on my desk. **2** to be changed into higher denominations (of money). - iva *mitṣaḥḥaḥ*.

ص ح ر

صحرا، صحراء *ṣaḥra* /n pl *ṣaḥaari, ṣaḥaara*/ desert. *ʔiṣ-ṣaḥra l-kubra* the Sahara Desert. *ṣaḥaara siti* night-club in the desert near the Pyramids of Guiza.

صحراوى *ṣaḥraawi* /adj */ desert-, of the desert. *ṭariiʧ ṣaḥraawi* desert road.

ص ح ص ح

صحصح *ṣaḥṣaḥ* **1** /vt/ to stir (s.o.) to alertness or activity. *ṣaḥṣaḥ (nafs-ak)* look smart! wake up a bit! *gaww^{i} mṣaḥṣaḥ* invigorating weather. **2** /vi/ to become alert. *ṣaḥṣaḥ luhum kuwayyiṣ la-yyiffuu-k* be on your guard against them lest they deceive you. - vn *ṣaḥṣaḥa*; ava/pva *miṣaḥṣaḥ*.

اتصحصح *ʔitṣaḥṣaḥ* or *ʔiṣṣaḥṣaḥ* /vi/ to stir oneself into activity, be stirred into activity. - ava/iva *mitṣaḥṣaḥ*.

ص ح ف

صحفى *ṣaḥafi* **1** /adj */ journalistic. *maqaal ṣaḥafi* newspaper article. *muʔtamar ṣaḥafi* press conference. **2** /n */ journalist.

صحافة *ṣaḥaafa* /n/ **1** journalism. **2** newspaper industry. *ḥurriyyit iṣ-ṣaḥaafa* freedom of the press.

صحيفة *ṣaḥiifa*ʔ /n/ **1** /pl *ṣaḥaayif*/ paper, document. ‖*ṣaḥiifit sawaabiʧ* police record, criminal record. *-ṣaḥiifit daʕwa [leg]* (written) pleading. **2** /pl *ṣuḥuf*/ newspaper.

مصحف *muṣḥaf* /n pl *maṣaaḥif*/ copy of the Koran.

ص ح ن [1]

صحن *ṣaḥan (a)* /vt/ to grind. *ḥilba maṣḥuuna* ground fenugreek. - vn *ṣaḥn, ṣiḥiin*; ava *ṣaaḥin*; pva *maṣḥuun*.

صحنة *ṣaḥna* /inst n, pl *-aat*/ a grinding.

صحّانة *ṣaḥḥaana* /n pl *-aat*/ grinder (for coffee, grain etc.).

مصحنة *maṣḥana* /n pl *maṣaaḥin*/ grinder. *maṣḥanit bunn* coffee-grinder.

اتصحن *ʔitṣaḥan* or *ʔiṣṣaḥan* /vi/ to be ground. - iva *mitṣiḥin*.

انصحن *ʔinṣaḥan* = *ʔitṣaḥan*. - iva *minṣiḥin*.

ص ح ن [2]

صحن *ṣaḥn* /n pl *ṣuḥuun, ṣuḥúna*/ **1** plate, dish. ‖*ṣaḥn ir-rigl* the sole of the foot. **2** (also *ṣaḥn^{i} daar*) courtyard. **3** narthex (of a church).

ص ح و see ص ح ى : *ṣaḥw, ṣaḥwa*

ص ح ى

صحى *ṣiḥi (a)* /vi/ **1** to wake up, waken. *ʔil-beeh wis-sitt^{i} haanim ṣiḥyu walla lissa* have the master and mistress woken yet or not? *yiṣḥa mil-fagr^{i} kull^{i} yoom* he is awake from dawn every day. ‖*noobit ṣaḥayaan [mil]* reveille. **2** to become alert. *ʔana ṣaaḥi lu* I am on my guard for any of his tricks. - vn *ṣaḥayaan*; ava *ṣaaḥi*.

صاحى *ṣaaḥi* /adj */ awake, alert, alive.

صحو *ṣaḥw* /adj invar/ fair, clear, fine (of weather, sky).

صحوة *ṣaḥwa* /n/ awakening. *ṣaḥwit il-moot* final rally before death.

صحيان *ṣaḥyaan* /adj */ alert. *ṣaḥyaan li-rooḥ-u* looking out for himself, taking care of number one.

أصحى *ʔaṣḥa* /el/ more/most alert, alive or awake.

صحّى *ṣaḥḥa* /vt/ to awaken, rouse. *gih il-buliis ṣaḥḥaa-ni f-wisṭ il-leel* the police came and woke me up in the middle of the night. - vn *taṣḥiyya*; ava/pva *miṣaḥḥi*.

اتصحّى *ʔitṣaḥḥa* or *ʔiṣṣaḥḥa* /vt/ to be awakened, be roused. - iva *mitṣaḥḥi*.

ص خ ر

صخر *ṣaxr* /n pl *ṣuxuur*/ rock.

صخرى *ṣaxri* /adj/ rocky, stony.

ص د ء see ص د ى [1]

ص د د [1]

صدّ *ṣadd (u)* /vt/ **1** to deflect, parry, block. *law waahid faaṭ il-koora fig-goon yiqdar yiṣudd-a-ha* if someone shoots the ball at the goal he can deflect it. ‖*ṣadd^{i} (w-)radd* to and fro, as in *ʔil-makkuuk maafi ṣadd^{i} radd* the shuttle runs to and fro. *-ṣadd^{i} nifs(-u) ʕan* to put (s.o.) off (his food, his work). **2** to rebuff. *ʔil-bint^{i} kull^{i} m-akallim-ha ṭṣudd-i-ni* every time I speak to the girl she rebuffs me. - vn *ṣadd, ṣadadaan*; ava *ṣaadid*; pva *maṣduud*.

ضدّة *ṣadda* /inst n, pl *-aat*/ *[sport]* a block, a deflection, a return.

¶ *ṣadda (w-)radda* (1) to and fro. (2) a street ball game.

صادود *ṣaduud* /n pl *ṣawadiid*/ support for the cross beam of a *saqya* (see Pl.E, 2). *yimuut it-toor wi-nifs-u f-ḫakka fiṣ-ṣaduud [prov]* (an ox dies wishing for a rub against the *ṣaduud*) ≈ old habits die hard.

مصدّ *maṣadd* /n pl *-aat*/ obstruction, barrier.

اتصدّ *ʔitṣadd* or *ʔiṣṣadd* /vi/ **1** to be deflected, be parried, be blocked. ‖ *nifs(-u) nṣaddit ʕan* to be put off (one's food, one's work). **2** to be rebuffed. -iva *mitṣadd*.

انصدّ *ʔinṣadd* = *ʔitṣadd*. -iva *minṣadd*.

ص د د [2]

صديد *ṣadiid* /n/ pus.

صديدى *ṣadiidi* /adj */ exuding pus. *ramad ṣadiidi [path]* ophthalmia.

ص د ر

صدر *ṣadar (u)* /vi/ **1** to appear, emerge, originate. *huwwa-na ṣadar minni ḫaaga tzaʕʕal-ak* have I done anything to anger you? **2** to be promulgated, be issued. *magallit ṣabaaḥ il-xeer bi-tuṣdur kull[i] ʔusbuuʕ* the magazine *ṣabaaḥ il-xeer* appears every week. *ʔil-qanuun il-gidiid ṣadar min ʔusbuuʕ* the new law came out a week ago. *ṣadarit ʔashum min ʕadad min if-farikaat* shares have been issued by a number of companies. -vn *ṣuduur*; ava *ṣaadir*.

صادر *ṣaadir[1]* **1** /adj */ departing, outgoing. *gadwal il-quṭúra ṣ-ṣadra* table of train departures. *baḍaayiʕ ṣadra* goods for delivery. **2** /n/ outgoing mail, outgoing messages. *daftar iṣ-ṣaadir* register of outgoing mail. *maktab iṣ-ṣaadir* telegraph transmitting office.

صادرات *ṣaadiraat* /pl n/ exports.

صدر *sidr[2], ṣadr* /n pl *ṣuduur, ʔiṣdaar*/ **1** chest, breast, bosom. *ḍarabt-u f-sidr-u* I struck him on the chest. *xad-ha ʕala sidr-u* he clasped her to his bosom. *baʕd il-wilaada s-sidr[i] b-yikbar* after childbirth the bosom becomes larger. *mustaffa ṣ-ṣadr* chest hospital. *maqaas is-sidr* chest measurement, bust measurement. ‖ *sidr il-xaṭṭ* the side of the furrow. *-sidr-u waasiʕ* he's tolerant and understanding. *-fataḥ-li sidr-u* he became patient and understanding. **2** cutting edge (of a blade).

صدرى *sidri, ṣadri*↑ /adj/ pertaining to the chest. *ʔil-mustaffa ṣ-ṣadriyya* the chest hospital. ‖ *ʔil-qafaṣ iṣ-ṣadri* the rib cage.

صدريّة *sidriyya* /n pl *-aat*/ *[Chr]* alb.

صدارة *ṣadaara*↑ /n/ priority, precedence. *qaḍiyyit il-bitrool liiha ṣ-ṣadaara fil-mufawḍaat* the question of oil has priority in the negotiations. *ʔil-kamangaat fi-makaan iṣ-ṣadaara* the violins are in the most prominent position.

صديرى *sideeri* /n pl *sadaari*/ **1** type of vest or waistcoat worn under the galabiya (see Pl.F, 3). **2** waistcoat.

مصدر *maṣdar* /n pl *maṣaadir*/ **1** source. *maṣdar rizq* source of sustinence. *maṣdar iṣ-ṣoot* the source of the sound. **2** jacket pocket (in pickpockets' jargon). **3** *[gram]* verbal noun.

مصدور *maṣduur* /adj */ suffering from tuberculosis.

صدّر *ṣaddar* /vt/ **1** to dispatch. *tariix taṣdiir il-muzakkara feen* where is the date of dispatch of the memorandum? **2** to export. **3** to put in the front. *kull[i] m-akallim-u yṣaddar-li ʔaxuu* every time I question him he confronts me with his brother. -vn *taṣdiir*; ava *miṣaddar*.

مصدّر *muṣaddir* /n */ exporter.

اتصدّر *ʔitṣaddar* or *ʔiṣṣaddar* /vi/ **1** passive of *ṣaddar*. **2** to push oneself forward. *geet ʔaxuff[i] f-ʔooḍit il-maʔmuur ʔitṣaddar-li ʕaskari txiin* just as I was going into the police chief's office a fat cop confronted me. *bi-yiigi ʕala l-hayfa w-yitṣaddar* (he comes up against what is trifling and asserts himself) ≈ he tilts at windmills. -ava/iva *mitṣaddar*.

صادر *ṣaadir[2]* /vt/ to confiscate. -vn *muṣadra*; ava/pva *miṣaadir*.

اتصادر *ʔitṣaadir* or *ʔiṣṣaadir* /vi/ to be confiscated. -iva *mitṣaadir*.

أصدر *ʔaṣdar* /vt/ **1** to issue, promulgate. *ʔaṣdarit il-ḫukuuma taʕlimaat gidiida lil-muwaẓẓafiin* the government has issued new instructions to civil servants. **2** to publish, put out. *ḫa-niṣdir ʕadad xaaṣṣ[i] l-mudillaat ir-rabiiʕ* we shall put out a special issue for the spring fashions. **3**: *ʔiwrik-ni wi-ṣdir nafs-ak [prov]* (give me the leg and take the breast yourself) no-one is expected to promote others above his own head. -vn *ʔiṣdaar*; ava *miṣdir*.

استصدر *ʔistaṣdar* /vt/ to obtain, have issued. *ʔistaṣdaru ʔamr[i] min il-maḥkama bil-ʔixla* they obtained a court order for the eviction. -vn *ʔistiṣdaar*; ava *mistaṣdar*.

ص د ع

صداع *ṣudaaʕ* /n/ headache. *ʔana gaa-ni ṣudaaʕ* I've got a headache.

صدّع *ṣaddaʕ* **1** /vt/ to afflict with a headache. *ṣaddaʕt-i-ni* you have given me a headache! **2** /vi/ to get a headache. *raas-u ṣaddaʕit min ʔillit in-noom* ≈ he developed a headache from lack of sleep. -vn *taṣdiiʕ*; ava/pva *miṣaddaʕ*.

اتصدّع *ʔitṣaddaʕ* or *ʔiṣṣaddaʕ* /vi/ **1** to be given a

headache. 2↑ to collapse, crumble. *beet-u l-qadiim iṣṣaddaɛ* his old house has fallen into disrepair. -vn *taṣadduɛ*; ava/iva *miṭṣaddaɛ*.

ص د غ

صدغ *sidɤ* or *ṣidɤ, sadɤ* or *ṣadɤ* /n pl *sidaaɤ, ṣidaaɤ, ṣuduɤa*/ 1 cheek. *xabbaṭ-lu ɛala sdaaɤ-u ɛaʃaan yifuuq* slap his cheeks so he will come round. *huwwa ɛaamil zayy[i] musmaar fiṣ-ṣidɤ* ≈ he's a pain in the neck. 2 cheek piece (of a bridle). 3 /adj invar/ cheeky.

صدغ *ṣidiɤ, sidiɤ* /adj */ cheeky.

أصدغ *ʔaṣdaɤ, ʔasdaɤ* /el/ more/most cheeky.

صدّغ *saddaɤ, ṣaddaɤ* /vi/ 1 to become fat and thick. 2 to behave in a cheeky manner. *mahma tkallim-u biz-zooq yṣaddaɤ-lak* however gently you talk to him, he's always rude to you. -vn *taṣdiiɤ, tasdiiɤ*; ava *miṣaddaɤ, misaddaɤ*.

استصدغ *ʔistasdaɤ, ʔistaṣdaɤ* 1 /vt/ to select for cheekiness. 2 to consider cheeky. — /vi/ 3 to behave cheekily. -vn *ʔistisdaaɤ, ʔistiṣdaaɤ*; ava *mistasdaɤ, mistaṣdaɤ*.

ص د ف [1]

صدف *ṣadaf[1] (a)* /vi/ to happen by chance. *ʔil-ɛiid ṣadaf wi-ga g-gumɛa* the feast happened to fall on a Friday. -/impersonally/ *yiṣdaf yikuun ɛandina win-nuur maqṭuuɛ* it may happen that he's at our place when there's a power cut. -ava *ṣaadif*.

صدفة *ṣudfa* 1 /n pl *ṣudaf*/ chance, chance circumstance, coincidence. *qabilt-u biṣ-ṣudfa* I met him by chance. *liṣ-ṣudaf is-saɛiida* owing to happy circumstance. 2 /adv/ by chance.

صادف *ṣaadif* 1 /vt/ to come across, chance upon. *ṣadift axuu fif-faariɛ* I happened upon his brother in the street. 2 /vi/ it happened (that). *yiṣaadif ʔinnu fiṣ-ṣinima* it (so) happens that he's at the cinema. -vn *muṣadfa*; ava *miṣaadif*.

مصادفة *muṣadfa* /n pl *-aat*/ chance. *bil-muṣadfa* by chance.

اتصادف *ʔiṭṣaadif* or *ʔiṣṣaadif* /vi/ 1 to be come across, be chanced upon. 2 it happened (that). -ava/iva *miṭṣaadif*.

ص د ف [2]

صدف *ṣadaf[2]* /n/ 1 /coll/ shell(s). 2 mother-of-pearl.

صدفة *ṣadafa* /unit n, pl *-aat*/ a shell.

صدفيّة *ṣadafiyya* /n/ *[path]* psoriasis.

صدفجي *ṣadafgi* /n pl *-yya*/ worker in mother-of-pearl inlay.

ص د ق

صدق *sadaq, ṣadaq (u)* /vi/ to tell the truth, speak truthfully. *sadaq illi qaal il-ḥubb[i] bahdala* he spoke truly who said that love turns you upside down. *ṭuul ɛumr-u b-yusduq fi-kalaam-u* he always speaks the truth. ‖ *ʔana b-aḥibb asduq fi-mawaɛiid-i* I like to keep my appointments faithfully. *-laa wi-nta s-saadiq* polite prefatory remark made when about to contradict someone ≈ forgive me for contradicting you, but.... -vn *ṣidq, sudq, ṣidq*↑; ava *saadiq, ṣaadiq*.

صدق *ṣidq* or *sudq* /n/ truth. *kidb[i] msaawi wala ṣidq[i] mbaɛzaq [prov]* consistent lying is more credible than garbled truth.

صدقة *ṣadaqa, sadaqa, ṣadaqa* /n pl *-aat, -aat*/ 1 charitable deed or gift. *ʔik-kilma ṭ-ṭayyiba sadaqa* a kind word is a good deed. 2 *[Isl]* specific act of charity prescribed by religion.

أصدق *ʔaṣdaq, ʔasdaq* /el/ more/most truthful.

صداق *ṣadaaq* /n/ marriage settlement.

صداقة *ṣadaaqa, sadaaqa[1], ṣadaaqa* /n/ friendship. *ʔilli beeni w-beenak ʔaqwa min iṣ-ṣadaaqa* what's between you and me is stronger than friendship.

صداقة *sadaaqa[2]* /n/ truthfulness. *ɛandu sadaaqa* he is truthful.

صديق *ṣadiiq, ṣadiiq*↑ /n pl *ʔaṣdiqaaʔ*/ friend. *ʔiṣ-ṣadiiq bi-yʃaarik ṣadiiq-u f-kull[a] ḥaaga* friends share everything together.

صدّيق *ṣaddiiq, ṣiddiiq* /n/ *[Isl]* true believer (epithet of the first Caliph, Abu Bakr).

مصداق *misdaaq* (also *misdaaqan): misdaaq li-kalaam-ak* ... confirming your (truthful) words ....

صدّق *saddaq, ṣaddaq[1]* /vt/ to deem truthful, believe. *ya ret-ni ma-saddaqt-u fil-ʔawwil* I wish I hadn't believed him at the start. *da miʃ misaddaq naẓar-u* he can't believe his eyes. *tiḥlif-li ʔasaddaq-ak ʔaʃuuf ʔumuur-ak ʔastaɛgib [prov]* ≈ your behaviour contradicts what you say (though you try to convince me you're truthful)! *tisaddaq* would you believe? can you credit? ‖ *tisaddaq bi-llaah* honestly! as God is my witness! -vn *tasdiiq*; ava *misaddaq*; pva *muṣaddaq*↑.

¶ *ma-saddaq* to be incredulous and overjoyed that, as in *ma-saddaqt aṭlaɛ mil-qism* I could hardly believe I was out of the police station, *laqeet xalt-i ɛayyaana w-ma-saddaqit fafit-ni* I found my aunt sick, and she was overjoyed to see me, *ma-saddaqt[i] smiɛti kilma ɛaʃaan tiɛmil min il-ḥabba qubba* you just loved to seize upon a single word to make a mountain out of a molehill. *-ma-saddaq ... wi- ...* hardly had he ... when, as in *ma-saddaqna nirtaaḥ ʃiwayya w-gum gabu-lna ʃuɣl[i] taani* we had hardly had chance to rest a bit when they came and brought us some more work, *ma-saddaq ʔinnuhum saʔaluu wi-nfataḥ* no sooner had they asked

him than he poured out his story.

صدّق *ṣaddaq*[2] /vi/ to give authorization, give endorsement or confirmation. *b-aɛmil ṭalàb bi-tṣaddaq ɛalee ʃil-ʃidaara* I make out a request which the administration authorizes. *ʃit-tawqiiɛ laazim it-taṣdiiq ɛalee min gihit il-waziir* the signature has to be endorsed by the minister. - vn *taṣdiiq*; ava *miṣaddaq*.

مصدّقات *muṣaddaqaat* /pl n/ endorsed documents.

اتصدّق *ʃitsaddaq* or *ʃissaddaq* /vi/ to be believed. - iva *mitsaddaq*.

اتصدّق *ʃitṣaddaq* or *ʃiṣṣaddaq* /vi/ (impersonal) passive of *ṣaddaq*[2]. *ʃir-riḥla tṣaddaq ɛaleeha f-ʃaaxir laḥẓa* the trip was approved at the last minute. - iva *mitṣaddaq*.

صادق *ṣaadiq* 1 /vt/ to befriend, become friendly with. *bint-i ṣadqit walad baṭṭaal* my daughter has made friends with some good-for-nothing. 2 /vi/ to give confirmation or endorsement. - vn *miṣadqa*; ava *miṣaadiq*.

اتصادق *ʃitṣaadiq* or *ʃiṣṣaadiq* /vi/ 1 (impersonal) passive of *ṣaadiq* 2. *ʃit-taṣariiḥ itṣaadiq ɛaleeha* the permits were endorsed. 2 to become friendly. *ʃitṣadqu maɛa* (or *wayya*) *baɛḍ* they became friends. - vn *taṣaaduq*↑; ava/iva *mitṣaadiq*.

ص د م

صدم *ṣadam (u, i)* /vt/ 1 to bump, knock. *ṣadamit-u ɛarabiyya w-maat* a car hit him and he died. 2 to shock. *ṣadam-ni l-xabar qawi* the news was a great shock to me. — /vi/ 3 to bump, knock. *ṣadam fiyya waad ṣuɤayyar* a small boy bumped into me. - vn *ṣadm, ṣadamaan*; ava *ṣaadim*; pva *maṣduum*.

صدمة *ṣadma* /n pl *-aat*/ 1 bump, jolt, shock, impact. 2 shock, disappointment. *ṣadmit-i fiik kaanit kibiira* my disappointment in you was great.

اتصدم *ʃitṣadam* or *ʃiṣṣadam* /vi/ 1 to collide. 2a to be shocked. 2b to be disappointed. - ava/iva *mitṣidim*.

انصدم *ʃinṣadam* = *ʃitṣadam*. - vn *ʃinṣidaam*; ava/iva *minṣidim*.

صادم *ṣaadim* /vt/ to collide with, crash into. - vn *ṣidaam, muṣadma*; ava *miṣaadim*.

مصادمة *muṣadma* /n pl *-aat*/ collision.

اتصادم *ʃitṣaadim* or *ʃiṣṣaadim* /vi/ to be in collision. *ʃiṣṣadmu maɛa baɛḍ*[i] *fir-raʃy* their opinions clashed. - vn *taṣaadum*; ava *miṭṣaadim*.

تصادم *taṣaadum* /n pl *-aat*/ collision.

اصطدم *ʃiṣṭadam* /vi/ to collide, impact. *ʃil-mooga l-ḥamla tiṣṭidim bil-ʃiryal bitaaɛ gihaaz il-istiqbaal* the carrier wave strikes the wireless receiver's aerial. *ʃiṭ-ṭayyaara ṣṭadamit bil-burg* the plane crashed into the tower. - vn *ʃiṣṭidaam*; ava *miṣṭidim*.

اصطدام *ʃiṣṭidaam* /n pl *-aat*/ collision, crash.

ص د ى [1]

صدى، صدأ *ṣada*[1] /n/ 1 rust, oxide (on metals). 2 *[bot]* plant rust.

صدّى، صدّأ *ṣadda* 1 /vt/ to cause to rust. *maɛruuf ʃinn ir-ruṭuuba bi-tṣaddi l-ḥadiid* it is well known that moisture causes iron to rust. 2 /vi/ to rust, oxidize. *bi-nidhin il-ḥadiid ɛafaan ma-yṣaddii-ʃ* we paint the iron so it doesn't rust. *ḥadiid miṣaddi* rusty iron. ‖ *muxx-u mṣaddi* he's dull-witted. - vn *taṣdiyya*; ava/pva *miṣaddi*.

ص د ى [2]

صدى *ṣada*[2] /n pl *ʃaṣdaaʃ*↑/ echo. ‖ *ʃeeh ṣada l-xabar da fin-naas* how do people react to this news?

ص د ى و م

صديوم *ṣudyuum* <prob Fr> /n/ sodium.

ص ر ح

صراحة *ṣaraaḥa* /n/ frankness, candour. *ʃismaɛ ya ɛamm*[i] *mā-fii-ʃ ʃaḥsan miṣ-ṣaraaḥa* listen here, my man, the best thing is to be frank! ‖ *bi-ṣaraaḥa* frankly, as in *kunt*[i] *b-ṣaraaḥa mitxaaẓ qawi* frankly, I was extremely annoyed.

صريح *ṣariiḥ* /adj pl *ṣuraḥa*/ frank, candid. *ma-na dayman ṣariiḥ maɛaak* but I'm always frank with you! *bi-ṣariiḥ il-ɛibaara* without mincing any words.

أصرح *ʃaṣraḥ* /el/ more/most candid or frank.

صرّح *ṣarraḥ* /vi/ 1 to give official permission or authorization. *ṣarraḥuu-li b-duxuul il-manṭiqa l-ɛaskariyya* they authorized me to enter the military zone. 2↑ to make an official statement or announcement. *ṣarraḥ masʃuul bi-ntihaaʃ il-ʃazma* an official spokesman announced the end of the crisis. - vn *taṣriiḥ*; ava/pva *miṣarraḥ*.

تصريح *taṣriiḥ* /n/ 1 /pl *taṣariiḥ*/ permit, permission, authorization. *taṣriiḥ duxuul* entry permit. 2 /pl *-aat*/ (official) statement, announcement.

اتصرّح *ʃitṣarraḥ* or *ʃiṣṣarraḥ* /vi/ (impersonal) passive of *ṣarraḥ*. *ʃitṣarraḥ-lu b-ʃusbuuɛ ʃagaaza* he was allowed one week's leave. - iva *mitṣarraḥ*.

صارح *ṣaariḥ* /vt/ to be frank with. *ṣarḥit-ni bi-lli f-qalb-a-ha* she made a clean breast to me of what was on her mind. - vn *muṣarḥa, miṣarḥa*; ava *miṣaariḥ*.

اتصارح *ʃitṣaariḥ* or *ʃiṣṣaariḥ* /vi/ to speak frankly to one another. *ʃitṣarḥu wayya baɛḍ*[i] *b-kull illi f-nafs-u-hum* they were frank with one another about everything on their minds. - ava *mitṣaariḥ*.

ص ر خ see س ر خ : *ṣarax, ṣarx, ṣarxa, ṣaruux, ṣarrax*

ص ر ر [1]
صرّ *ṣarr*[1] *(u)* /vt/ **1** to tie up, lace up (the opening of a bag etc.). *ʕana ɛaayiz ʔaʃuuf il-ɋamḥ*[i] *ɋabl*[i] *ma tṣurr iz-zikiiba* I want to look at the wheat before you tie up the sack. **2** to pack, bundle up (in a cloth, the corners of which are knotted or laced together). *miraat-u ṣarrit il-ʏada btaaɛ-u f-mandiil wi-ʃayyaɛit-u l-ʏeeṭ* his wife tied up his lunch in a cloth and sent it to the field. - vn *ṣarr, ṣararaan*; ava *ṣaarir*; pva *maṣruur*.
صرّة *ṣurra*[2] /n pl *ṣurar*/ bundle (made in a cloth, the corners of which are knotted or laced together), small bag, purse.
اتصرّ *ʔitṣarr* or *ʔiṣṣarr* /vi/ passive of *ṣarr*[1]. - iva *mitṣarr*.
أصرّ *ʔaṣarr* /vi/ to insist, persist. *waaḥid min iṭ-ṭarafeen bi-yṣirr*[a] *ɛala mawɋif-u* one of the parties is insisting on his position. - vn *ʔiṣraar*; ava *muṣirr*.
إصرار *ʔiṣraar* /vn/ ‖*sabɋ il-ʔiṣraar [leg]* premeditation, as in *ɋatl maɛa sabɋ il-ʔiṣraar (wat-taraṣṣud)* premeditated murder.

ص ر ر [2]
ثرّ، صرّ *ṣarr*[2] *(u)* **1** /vt/ to cause to leak or dribble. *ʔiʃ-ʃiwaal ṣarr ir-ruzz*[i] *kull-u* the sack let all the rice trickle out. **2** /vi/ to leak out, dribble out. *ʔir-ruzz*[i] *bi-yṣurr*[i] *min ik-kiis* the rice is running out of the bag. *ʔil-mayya nazla ṣararaan mil-ɋirba* water is leaking (steadily) out of the water-skin. - vn *ṣararaan, ṣarr*; ava *ṣaarir*.

ص ر ر [3]
صرّ *ṣarr*[3]↑ *(u)* /vi/ to make a screeching or grating sound. *ṣarr*[a] *ɛala snaan-u* he ground his teeth. - ava *ṣaarir*.

ص ر ر [4] see س ر ر [3] : *ṣurra*[1]

ص ر ص ر
صرصر *ṣarṣar* /vi/ to make a screeching or grating sound. - vn *ṣarṣara*; ava *miṣarṣar*.
صرصار *ṣurṣaar* /n pl *ṣaraṣiir*/ cockroach.
صرصور *ṣarṣuur* /n pl *ṣaraṣiir*/ **1** cockroach. ‖*ṣarṣuur il-ʏeeṭ* cricket. **2** (also *ṣarṣuur il-widn*) cavity behind the lobe of the ear, (loosely) lobe of the ear.

ص ر ط
الصراط *ʔiṣ-ṣiraaṭ* /n/ the Path of Righteousness. *maafi ɛaṣ-ṣiraaṭ* behaving righteously, following the straight and narrow.

ص ر ع
صرع *ṣaraɛ*[1] *(a)* /vt/ **1** to startle, alarm. *daaxil yitsaḥḥab fiḍ-ḍalma ṣaraɛ-ni* coming in stealthily in the dark he gave me a fright. **2** to fluster, agitate. - vn *ṣaraɛaan*; ava *ṣaariɛ*; pva *maṣruuɛ*.
صرع *ṣaraɛ*[2] /n/ epilepsy.
اتصرع *ʔitṣaraɛ* or *ʔiṣṣaraɛ* /vi/ **1** to be startled, be alarmed. **2** to be flustered, be agitated. - iva *mitṣiriɛ*.
انصرع *ʔinṣaraɛ* = *ʔitṣaraɛ*. - iva *minṣiriɛ*.
صارع *ṣaariɛ* /vt/ to wrestle with, struggle with. *muṣarɛit il-moot* wrestling with death. - vn *muṣarɛa, ṣiraaɛ*↑; ava *miṣaariɛ*.
مصارعة *muṣarɛa, miṣarɛa* /n/ wrestling. *muṣarɛit is-siiraan* bull-fighting.
مصارع *muṣaariɛ* /n */ wrestler.
اتصارع *ʔitṣaariɛ* or *ʔiṣṣaariɛ* /vi/ to wrestle (with o.a.). - ava *mitṣaariɛ*.

ص ر ف [1]
صرف *ṣaraf*[1] *(i)* /vt/ **1** to spend (money). *ʕana b-aṣrif ɛaleeha ɛiʃriin gineeh ʔusbuuɛi* I spend twenty pounds a week on her. *ʔiṣrif ma fil-geeb yiʔtii-k ma fil-ʏeeb [prov]* (spend what is in your pocket and more will come providentially) ≈ *carpe diem*. **2** to disburse, issue, dispense. *ʔid-duktuur ṣaraf-li ʃahaada ṣiḥḥiyya* the doctor issued me a health certificate. *ʔig-gamɛiyya b-tiṣrif it-tamwiin biṭ-biṭaɋaat* the co-operative distributes rationed goods on (presentation of) ration cards. *ruḥt il-muruur ṣarafuu-li ruxṣa gdiida* I went to the traffic department and they issued me with a new licence. **3** to exchange (paper for money or goods). *miʃ mumkin tiṣrif iʃ-ʃiik da ʔilla fil-xaarig* you can only cash this cheque abroad. *xud ir-ruʃitta btaɛt-ak lil-ʔagzaxaana ɛaʃaan yiṣrifu-haa-lak* take your prescription to the pharmacy and they'll dispense it for you. **4** to drain, draw off. *ɋabl*[i] *ma nizraɛ il-ʔarɋ*[i] *niṣrif minha l-mayya z-ziyaada lli fiiha* before we sow the land we drain off the excess water in it. **5** to exorcize. *ʔiʃ-ʃeex yiɛraf yiṣrif il-ɛafariit ɛan il-malbusiin* the sheikh can exorcize spirits from the possessed. - vn *ṣarf*; ava *ṣaarif*; pva *maṣruuf*.
¶ *ṣaraf (in-)naẓar* (1) to divert attention, as in *ʔil-muẓaharaat ṣarafit in-naẓar ɛan ziyaarit ir-raʔiis* the demonstration diverted attention from the president's visit. (2) to pay no attention, be distracted. *niṣrif in-naẓar ɛan il-mawḍuuɛ da* we'll ignore that question. *bint-i xayfa law iftaxalit tiṣrif in-naẓar ɛan ig-gawaaz* my daughter is afraid that if she works she will lose interest in marriage.
صرف *ṣarf* **1** /vn/ ‖*gihat iṣ-ṣarf* authority disbursing funds. - *ʔamr*[i] *ṣarf* or *ʔizn*[i] *ṣarf* (1) banker's order. (2) authorization to issue supplies etc. - *bi-ṣarf in-naẓar*

ɛan disregarding, not including. — /n/ **2** funds allocated for current expenditures. *miraat-i maska ṣarf il-beet* my wife is in charge of the house-keeping money. **3** drainage water. **4** *[ling]* morphology.

صرفيّة *ṣarfiyya* /n pl *-aat/* payment.

مصروف *maṣruuf*[1] /n/ **1** /pl *-aat/* **1a** expenditure. **1b** allowance. *maṣruuf geeb* pocket money. **2** /pl *maṣariif/* cost, expense. *maṣariif diraasa* tuition costs. ‖*nafar maṣariif [leg]* one who discharges a fine by work.

صرف *ṣirf* /adj invar/ pure, unmixed, sheer. *ɛarabi ṣirf* pure Arab. *di mayya ṣirf* that's pure water. *ɋumaaf ɋuṭn*[i] *ṣirf* pure cotton cloth.

صرفة *ṣirfa* /n pl *ṣiraf/* expedient, way out. *fuuf lak ṣirfa fil-mawduuɛ da* see if you can find a way out of this business.

صرافة *ṣiraafa* /n/ **1** money changing. **2** handling of cash.

صرّاف *ṣarraaf* /n */ **1** cashier. ‖*raaḥ yiḥaasib iṣ-ṣarraaf* to go and spend a penny. **2** /also pl *ṣayaarif, ṣayarfa/* money changer. **3** /also pl *ṣayaarif, ṣarraafa/ [rur]* land-tax collector.

صرّيف *ṣarriif*[↓] /n pl *ṣarriifa/ [rur]* land-tax collector.

مصرف *maṣraf* /n pl *maṣaarif/* **1** land drainage canal. ‖*maṣraf miiri [obsol]* drainage canal constructed and controlled by the government. **2**↑ bank.

مصرفي *maṣrafi*↑ /adj/ pertaining to a bank. *ɟiik maṣrafi [finan]* bank draft.

اتصرف *ʔitṣaraf* or *ʔiṣṣaraf* /vi/ passive of *ṣaraf*. -iva *mitṣirif*.

انصرف *ʔinṣaraf* /vi/ **1** to go away, turn away. ‖*ʔinṣiraaf [mil]* dismiss! -*daftar il-ḥuḍuur wil-inṣiraaf* ledger for signing in and out. **2** = *ʔitṣaraf*. -vn *ʔinṣiraaf*; ava/iva *minṣirif*.

صرّف *ṣarraf* /vt/ **1a** to discharge, deal with. *ṣarraft*[i] *ʔumuur-i* I dealt with my affairs. ‖*ṣarraf-ni ʔaɛmil ʔeeh* tell me what to do, suggest a solution to me. **1b** to commission (s.o.) to deal (with s.th.). *ṣarraft-u f-ʔumuur-i* I charged him to handle my affairs. **2a** to drain. *ṣarrafu l-mayya mil-ʔarḍ* they drained the water from the land. *ṣarrafu l-ʔarḍ*[i] *mil-mayya* they drained the land of the water. **2b** to dispose of, distribute (merchandise). *taagir il-gumla bi-yṣarraf il-biḍaaɛa ɛan ṭariiɋ tuggaar il-ɋaṭṭaaɛi* the wholesale merchant disposes of the goods via the retail merchants. **3** to cause to depart. *ṣarraf iḍ-ḍiyuuf* get rid of the guests! -vn *taṣriif*; ava/pva *miṣarraf*.

تصريفة *taṣriifa* /n/ **1** / pl *taṣariif/* = *ṣirfa*. **2** /pl *-aat/* instance noun of *taṣriif*.

اتصرّف *ʔitṣarraf* or *ʔiṣṣarraf* /vi/ **1** to act, behave. *tismaḥ li-bn-ak yiṣṣarraf kida* do you allow your son to behave in this way? **2a** to take steps, take appropriate action, act as one sees fit. *ʔiza ḥaṣalit dawʃa ʔil-ʔidaara ḥa-titṣarraf* if there's any disturbance, the administration will take appropriate steps. *ʔil-ḥukuuma b-titṣarraf fi-maʃaakil iʃ-ʃaɛb* the government is taking action to deal with the people's problems. *ʔaxuu-ya b-yitṣarraf fi-ʔamwaal il-ɛeela* my brother looks after the family's property. ‖*ʔil-maxzangi bi-yɋuulu ʔitṣarraf fil-ɛuhda* the steward, they say, has disposed (illegitimately) of what is in his custody. **2b** to cope, manage. *m-aɛraf-ʃ atṣarraf ʔizzaay law gooz-i maat* I don't know how I'd cope if my husband died. ‖*yiṣṣarraf ʔayy*[i] *kalaam* he does any old thing to get by. - *ʔaɛmil ʔeeh fil-muʃkila di*. - *ʔiṣṣarraf* 'What shall I do about this problem?' 'Find your way out of it.' -vn *taṣarruf*; ava *mitṣarraf*.

تصرّف *taṣarruf* /n/ **1** /vn/ ‖*taḥt*[i] *taṣarruf* ... at the disposal of .... -*sariiɛ it-taṣarruf* quick-witted, enterprising. -*ɛadiim it-taṣarruf* witless, helpless. **2** /pl *-aat, -aat/* (piece of) behaviour, (course of) action. *ʔit-taṣarruf iṣ-ṣaḥḥ*[i] *fil-ḥaala di ɤeer kida* that is not the right thing to do in this situation. *taṣarrufaat-ak baɋit fiḍiiḥa* your behaviour has become a scandal!

[2] ص ر ف

صرف *ṣaraf*[2] *(u)* /vi/ to use trimmings (on a galabiya, *gibba* or other item of men's clothing). -vn *ṣarf*; ava *ṣaarif*; pva *maṣruuf*.

مصروف *maṣruuf*[2] /coll n/ trimmings, accessories (for men's garments).

مصاريف *maṣariif* = *maṣruuf*[2].

[1] ص ر م

صرمة *ṣarma* <prob P *charm*> /n pl *ṣuram/* pair of (old) shoes. ‖*ʔiḍrab id-dinya ṣarma* (hit the world with old shoes) take it easy, don't worry (said to person worried by a problem). -*ḍarabit nafs-a-ha sittiin ṣarma* ≈ she was filled with regret, she kicked herself. -*ḍarabit wiff-a-ha sittiin ṣarma* (she hit her face with sixty pairs of old shoes) ≈ she plastered her face with make-up. -*wiff-u maḍruub miit ṣarma* he looks very sullen. -*ya-bn iṣ-ṣarma* ≈ son of a clapped-out whore! -*ɛaṣ-ṣarma l-ɋadiima* ≈ (take it) and good riddance to you! as in *bukra taaxud filuus-ak ɛaṣ-ṣarma l-ɋadiima* you'll get your bloody money soon enough and good riddance to you!

صرماتي *ṣuramaati* /n pl *-yya/ [deris]* cobbler, shoemender.

[2] (ص ر م)

صرم *ṣurm* /n/ *[coarse]* arsehole. ‖*ṣurm-u ṭiliɛ fii* ≈ he

bust his arse to get it. - *kull il-maṣaayib fiik ya ṣurm id-diik [prov]* all catastrophes are (contained) in you, you cock's arse! (to a vile person). - *kull il-maṣaayib ṣaabit farag lamma farag ṣurm-u xarag [prov]* ≈ Farag was hit by so many disasters that he could take no more (of one beset by misfortunes).

صرمة *ṣirma* /n pl *-aat, ṣiram*/ chuck (of a drill used for precision work).

ص ر ى

صارى *ṣaari* /n pl *ṣawaari*/ **1** mast (of a boat). ‖*ṣaari ṣaʕqa* lightning conductor. **2** flagpole.

ص ص ى

صاصى *ṣaaṣa* /vi/ to cheep. *ʔil-katakiit bi-ṭṣaaṣî guwwa l-ʔafaṣ* the chicks chirp in the cage. - vn *miṣaṣiyya*; ava *miṣaaṣi*.

ص ط ب see م ص ط ب : *maṣṭaba*

ص ع ب

صعب *ṣuʕub, ṣiʕib (a)* /vi/ to become (more) difficult. *ʔif-fuṛl[i] b-yiṣʕab ʕaleena kull[i] fwayya* work gets gradually more difficult for us. - vn *ṣuʕuuba, ṣuʕubiyya*; ava *ṣaʕbaan*.

¶ *ṣiʕib ʕala* to evoke pity in (s.o.). *ʔaḥwaal-u b-tiṣʕab ʕalayya* I feel sorry for him in such circumstances. *ṣaʕbaan ʕaleeha l-masakiin dool* she feels sorry for those poor people.

صعوبة *ṣuʕuuba* /n pl *-aat, -aat, ṣiʕaab*/ difficulty. *bi-yiʃtiki min ṣuʕuubit il-ʔimtiḥaan* he complains of the difficulty of the exam.

صعوبيّة *ṣuʕubiyya* = *ṣuʕuuba*.

صعب *ṣaʕb* /adj/ hard, difficult, trying. *ʔimtiḥaan ṣaʕb* a difficult exam. *ʔil-fuqara bi-yʕiiʃu f-ẓuruuf ṣaʕba* the poor live under trying conditions. *kull[i] ʃeeʔ fi-ʔawwil-u ṣaʕb [prov]* everything is difficult at first. ‖*ʕumla ṣaʕba* hard currency.

أصعب *ʔaṣʕab* /el/ more/most difficult etc.

مصاعب *maṣaaʕib* /pl n/ difficulties.

صعّب *ṣaʕʕab* /vt/ to make difficult, complicate. *ʔil-ḥall[i] da yṣaʕʕab il-mas ʔala* this solution would only complicate the matter. - vn *taṣʕiib* ava/pva *miṣaʕʕab*.

اتصعّب *ʔiṭṣaʕʕab* or *ʔiṣṣaʕʕab* /vi/ **1** to smack the lips as an expression of dismay or regret. **2** to be made difficult. *ʔil-imtiḥanaat bi-tiṭṣaʕʕab kull[i] sana ʕan illi ʕabliiha* every year the exams are made more difficult than the year before. - ava/iva *miṭṣaʕʕab*.

استصعب *ʔistaṣʕab* /vt/ **1** to consider difficult. *ʔistaṣʕabu l-imtiḥaan* they found the exam difficult. **2** to select for difficulty. *ʔistaṣʕab ʃayy[i] suʃaal wi-sʃal-ni fii* choose me any difficult question and try it on me. - vn *ʔistiṣʕaab*; ava *mistaṣʕab*.

ص ع د

صعد *ṣaʕad↑ (a, yaṣʕud)* /vi/ to rise, ascend. *ʔil-ǧiil iṣ-ṣaaʕid* the rising generation. ‖*ʕiid iṣ-ṣuʕuud [Chr]* Feast of the Ascension. - vn *ṣuʕuud*; ava *ṣaaʕid*.

صعيد *ʔiṣ-ṣiʕiid* /prop n/ Upper Egypt.

صعيدى *ṣiʕiidi* /pl *ṣaʕayda*/ **1** /adj/ from or of Upper Egypt. **2** /n/ an Upper Egyptian. *kull illi yiigi min iṣ-ṣaʕayda fayda [prov]* an Upper Egyptian is only good for what you can get out of him. *ma-fii-ʃ ḥawaleen iṣ-ṣaʕayda fayda [prov]* there is no benefit in anything to do with the Upper Egyptians.

صعّد *ṣaʕʕad* /vt/ **1** *[mil]* to escalate (e.g., an attack). **2** *[admin]* to pass (s.th.) up a chain of command. **3** *[pol]* to vote (s.o.) onto a higher committee. - vn *taṣʕiid*; ava *miṣaʕʕad*.

اتصعّد *ʔiṭṣaʕʕad* or *ʔiṣṣaʕʕad* /vi/ passive of *ṣaʕʕad*. - iva *miṭṣaʕʕad*.

اتصاعد *ʔiṭṣaaʕid↑* or *ʔiṣṣaaʕid↑* /vi/ to be given off, rise (of vapours etc.). *fii ʔabxira saamma b-tiṭṣaaʕid wi-tiṭlaʕ ʃasnaaʔ it-tafaaʕul* there are toxic vapours which are given off and rise up during the reaction. - vn *taṣaaʕud*; ava *mutaṣaaʕid*.

تصاعدى *taṣaaʕudi↑* /adj/ ascending. *tartiib taṣaaʕudi* ascending order.

ص ع ق

صعق *ṣaʕaq (a)* /vt/ to give (s.o.) a shock. - vn *ṣaʕaqaan, ṣaʕaq*; ava *ṣaaʕiq*; pva *maṣʕuuq*.

صاعقة *ṣaʕqa, ṣaʕqa↑* **1** /n pl *ṣawaaʕiq*/ thunderbolt, bolt of lightning. *ṣaari ṣaʕqa* lightning conductor. **2** *ʔiṣ-ṣaʕqa* the Commandos (in the Egyptian army).

اتصعق *ʔiṭṣaʕaq* or *ʔiṣṣaʕaq* /vi/ to be thunderstruck. - iva *miṭṣiʕiq*.

انصعق *ʔinṣaʕaq* = *ʔiṭṣaʕaq*. - iva *minṣiʕiq*.

ص ع ل ك

صعلكة *ṣaʕlaka* /n/ destitution, being down-and-out.

صعلوك *ṣaʕluuk, ṣuʕluuk* (also *zaʕluuk*) /n pl *ṣaʕaliik*/ pauper, down-and-out, bum. ‖*ṣaʕluuk miṭqammiṣ* a well-dressed nobody. - *tiruuḥ feen ya zaʕluuk been il-muluuk* (what are you doing amongst kings, you bum?) ≈ keep out of your superiors' company.

اتصعلك *ʔiṭṣaʕlak* or *ʔiṣṣaʕlak* /vi/ to become or behave like a tramp or down-and-out. *ʔiṭṣaʕlak min maʃy-u maʕa ʃillit il-xanaafis* he's turned into a vagabond because of his keeping company with this group of hippies. - ava *miṭṣaʕlak*.

ص غ ر

صغر *ṣiɣir, ṣuɣur (a)* /vi/ **1** to become small or smaller. *miʃiina nuṣṣ[i] saaɛa bass[i] w-ka-ʃinn il-masaafa maṣiɣrit-ʃ* we walked for half an hour but it seemed that the distance didn't get any less. *ʃil-banṭaloon ṣiɣir ɛalayya* my trousers have become too small for me. **2** to become young or younger. *ʃil-ʃagaaza xallit-u zayy[i] ma ykuun ṣuɣur ɛaʃar siniin* having a holiday has made him look and feel ten years younger. - vn *ṣiɣar, ṣuɣr*.

صغر *ṣuɣr* /n/ **1** smallness. *ṣuɣr il-ʃibra xallaa-ni maʃuft[a] -haa-ʃ* the needle was so small I didn't see it. **2** childhood, youth. *ʃibtada min ṣuɣr-u yɛaakis il-banaat fiʃ-ʃawaariɛ* from an early age he began to pester girls in the streets.

صغر *ṣiɣar*↑ /n/ **1** smallness. *da yirgaɛ li-ṣiɣar ḥagm-u* this is owing to its smallness of size. **2** childhood, youth. *ʃit-taɛliim fiṣ-ṣiɣar ka-n-naqʃ[a] ɛal-ḥagar [prov]* what is taught in childhood is never forgotten.

صغير *ṣaɣiir* /n/ small cog-wheel (of a water-wheel) (see Pl.E, 8).

صغيرة *ṣaɣiira* /n pl *ṣaɣaayir*/ minor sin. *ʃil-kizb[i] min iṣ-ṣaɣaayir ʃinnama l-qatl[i] min il-kabaayir* lying is a minor sin while killing is a major sin.

صغّير *ṣuɣayyar* (also *zuɣayyar*) /adj * and pl *ṣuɣaar*/ **1** small. *ʃiqtaɛ-u ɛala ṣɣayyar* cut it small. *ṣuɣaar iz-zurraaɛ* small(-scale) farmers. **2** (also *ṣuɣayyar fis-sinn*) young. *ʃiṣ-ṣuɣaar ʃaḥibbaaʃ allaah [prov]* the young (or: children) are the beloved of God. *yiɛmiluu-ha ṣ-ṣuɣaar w-yuqaɛu fiiha l-kubaar [prov]* (the children start it, the adults fall into it) when children start a dispute, their parents become involved in it.

صغيّور *ṣuɣayyuur* (also *ṣuɣanṭaṭ, ṣuɣanṭuuṭ, ṣuɣannan, ṣuɣannuun, ṣuqanṭaṭ, ṣuqanṭuuṭ, ṣuɣaṭṭaṭ, ṣuɣaṭṭuuṭ, ṣuqaṭṭaṭ, ṣuqaṭṭuuṭ, zuɣanṭaṭ, zuɣanṭuuṭ, zuɣannan, zuɣannuun, zuqanṭaṭ, zuqanṭuuṭ, zuɣaṭṭaṭ, zuɣaṭṭuuṭ, zuqaṭṭaṭ, zuqaṭṭuuṭ*) /adj */ small and cute, tiny, wee.

أصغر *ʃaṣɣar* /el/ **1** smaller/smallest. **2** younger/youngest.

صغر *ṣaɣɣar* /vt/ **1** to make smaller, reduce, scale down. *ʃit-tarzi ṣaɣɣar il-huduum* the tailor took in the clothes. *niṣaɣɣar il-xaraayiṭ li-miqyaas munaasib* we reduce the maps to a suitable scale. **2** to cause to appear young(er). *ʃit-tasriiḥa g-gidiida ṣaɣɣarit-ha* the new hairstyle made her look younger. - vn *taṣɣiir*; ava/pva *miṣaɣɣar*.

اتصغّر *ʃiṭṣaɣɣar* or *ʃiṣṣaɣɣar* /vi/ **1** to be made smaller, be reduced or scaled down. **2** to be made to appear younger. - iva *miṭṣaɣɣar*.

استصغر *ʃistaṣɣar* /vt/ **1a** to consider (too) small. *ʃil-gaahil bi-yistaṣɣar if-ʃams[a] ɛaʃaan biɛiida* one who does not know better thinks the sun is small because it is far away. *ʃinta mistaṣɣar nayb-ak fil-laḥma* you think you have less than your fair share of meat? **1b** to consider (too) young. *ʃistaɣaruu-ni* (or *ʃistaṣɣaru sinn-i*) *rafaḍuu-ni* they decided I was too young and turned me down. **2** to belittle, underestimate. *fii naas bi-tistaṣɣar faʃn il-mawḍuuɛ da* some people underestimate the importance of this matter. *ʃiʃ-ʃabaab il-ʃayyam-di b-yistaṣɣaru f-ɛenee-hum ik-kubaar fis-sinn* young people these days don't respect their elders. **3a** to select for smallness. *ʃistaṣɣar ɛaṣaaya w-hat-ha* find a small stick and bring it! **3b** to select for youthfulness. - vn *ʃistiṣɣaar*; ava *mistaṣɣar*.

ص غ ط ط see ص غ ر : *ṣuɣaṭṭaṭ, ṣuɣaṭṭuuṭ*

ص غ ق و ل see ص ا غ[1] : *ṣaɣaquul ʃaɣaasi*

ص غ ن ط ط see ص غ ر : *ṣuɣanṭaṭ, ṣuɣanṭuuṭ*

ص غ ن ن see ص غ ر : *ṣuɣannan, ṣuɣannuun*

ص ف see و ص ف : *ṣifa*

[1] ص ف ح

صفحة *ṣafḥa* /n pl *-aat, ṣufaḥ*/ page. ‖*kurraas ṣafḥa w-ṣafḥa* exercise book with alternate blank and ruled pages.

صفيح *ṣafiiḥ* /n/ **1** thin sheet steel. **2** tin plate. *ɛilba ṣafiiḥ* tin can. ‖*lamba ṣafiiḥ* a small open-flame tin oil-lamp used in rural areas (see Pl.B, 2).

صفيحة *ṣafiiḥa* /n pl *ṣafaayiḥ*/ **1** piece of tin plate. **2** large metal can (commonly used as a rubbish bin). **3** blade (of a saw). **4** measure equivalent to twenty litres.

صفّح *ṣaffaḥ* **1** /vt/ to cover with metal sheeting. *ṣaffaḥu s-sanadiiq il-xaʃab biz-zink* they plated the wooden boxes with zinc. **2** /vi/ to be over-stimulated (of the mind). *dimaaɣ-i ṣaffaḥit leelit ʃimbaariḥ miʃ-ʃaay* ≈ I couldn't sleep last night because I'd been drinking tea. - vn *taṣfiiḥ*; ava/pva *miṣaffaḥ*.

مصفّح *miṣaffaḥ, muṣaffaḥ* /adj */ armoured. *ɛizaaz muṣaffaḥ* armoured glass. *ɛarabiyya mṣaffaḥa* armoured vehicle. ‖*raas-u mṣaffaḥa* (1) he's obstinate. (2) he's a night-owl, he stays up late.

اتصفّح *ʃiṭṣaffaḥ* or *ʃiṣṣaffaḥ* **1** /vt/ to leaf through (a book). **2** /vi/ to be plated. - ava/iva *miṭṣaffaḥ*.

[2] ص ف ح

صفح *ṣafaḥ (a)* /vi/ to grant forgiveness. *ṣafaḥ ɛanni li-ʃinnaha kaanit ʃawwil ɣalṭa minni* he forgave me,

since it was my first mistake. - vn *ṣafḥ, ṣafaḥaan*; ava *ṣaafiḥ*.

صفح *ṣafḥ* /n/ forgiveness. *law kǎan ɛaqib-ni kaan yibqa ʔahwan min ṣafḥ-u (ɛanni)* ≃ had he punished me, it would have been less painful than his forgiveness.

اتصفح *ʔitṣafaḥ* or *ʔiṣṣafaḥ* /vi/ (impersonal) passive of *ṣafaḥ*. *miʃ kull il-ɣalaṭaat yiṣṣifiḥ ɛanha* not all mistakes can be forgiven. - iva *mitṣifiḥ*.

صافح *ṣaafiḥ* /vt/ to shake hands with. - vn *miṣafḥa, muṣafḥa*; ava *miṣaafiḥ*.

اتصافح *ʔitṣaafiḥ* or *ʔiṣṣaafiḥ* /vi/ to shake hands (with o.a.). *baɛd il-liɛb itṣafḥu maɛa baɛḍ* after the game, they shook hands. - ava *mitṣaafiḥ*.

استصفح *ʔistaṣfaḥ* /vt/ to ask (s.o.) for forgiveness. *ruḥt astaṣfaḥ-u ɛan ɣalṭit-i lakinnu rafaḍ* I went to ask him to forgive my mistake but he refused. - ava *mistaṣfaḥ*.

ص ف ر [1]

صفر *ṣafar (u)* /vi/ to whistle. *ʔir-riiḥ bi-yuṣfur fiʃ-ʃibbaak* the wind whistles at the window. ‖ *ʔir-riiḥ ṣafar fi-wdaan il-ḥuṣaan ma-ḥadd[i]-ʃ ɋidir yiwaqqaf-u* the horse went wild and nobody could stop him. - vn *ṣafr*; ava *ṣaafir*.

صفير *ṣafiir*↑ /n/ whistle, whistling sound.

صفّارة *ṣuffaara* /n pl *-aat, ʾṣafafiir, safafiir*/ **1** whistle (sound). **2** whistle (instrument). *ḥalla b-ṣuffaara* pressure cooker. **3** six-holed single-reed flute. **4** siren. *ṣuffaarit ʔinzaar* warning siren.

اتصفر *ʔitṣafar* or *ʔiṣṣafar* /vi/ (impersonal) passive of *ṣafar*. ‖ *zayy[i] ma ykuun itṣafar fi-wdaan-u* as if it has gone wild (of an animal). - iva *mitṣifir*.

صفّر *ṣaffar[1]* /vi/ **1** to whistle. ‖ *widaan-i bi-tṣaffar* my ears are ringing. **2** to blow a whistle. - vn *taṣfiir, tasfiir*; ava *miṣaffar*.

اتصفّر *ʔitṣaffar[1]* or *ʔiṣṣaffar[1]* /vi/ (impersonal) passive of *ṣaffar[1]*. *miʃ ʔana lli yitṣaffar-lu miʃ-ʃibbaak* I am not one to be whistled at from the window. - iva *mitṣaffar*.

ص ف ر [2]

أصفر *ʔaṣfar* /adj, fem *ṣafra*, pl *ṣufr*/ **1** yellow. *balaḥ ʔaṣfar* yellow dates. ‖ *ɛads[i] ʔaṣfar* husked lentils. - *ʔarḍ[i] ṣafra* soil of clay mixed with sand. - *ʔis-saraaya ṣ-ṣafra [deris]* mental hospital, as in *ḥaqq-ak tiruuḥ is-saraaya ṣ-ṣafra* you ought to be locked up. **2** pale, wan. **3** sorrel (of a horse).

صفراء *ṣafra* /n/ bile.

الصفرة *ʔiṣ-ṣafra* /n/ jaundice.

صفراوي *ṣafraawi* /adj */ rancorous. ‖ *mazaag ṣafraawi* a choleric temperament (one of the four cardinal humours).

صفار *ṣafaar* /n/ yellowness, yellow. ‖ *ṣafaar ʃams* just before sunset. - *ṣafaar (beeḍ)* egg yolk.

صفاري *ṣafaari: ṣafaari ʃams* just before sunset. *bi-yruuḥu ɣeṭ-hum ṣafaari ʃams* they go to their fields in the late afternoon just before sunset.

صفّر *ṣaffar[2]* /vt/ to make yellow. *ʔis-sagaayir bi-tṣaffar is-sinaan* cigarettes yellow the teeth. - vn *taṣfiir*; ava *miṣaffar*.

اتصفّر *ʔitṣaffar[2]* or *ʔiṣṣaffar[2]* /vi/ to be made yellow. - iva *mitṣaffar*.

اصفرّ *ʔiṣfarr* /vi/ **1** to yellow, turn yellow. *waraq ik-kitaab iṣfarr[i] min if-ʃams* the pages of the book have yellowed from the sun. **2** to become pale or wan. - vn *ʔiṣfiraar*; ava *miṣfirr, miṣfirr*.

استصفر *ʔistaṣfar* /vt/ **1** to select for yellowness. **2** to reject for yellowness. - ava *mistaṣfar*.

(ص ف ر) [3]

صفر *ṣifr* (also *sifr*[2]) /n pl *ʔaṣfaar, ṣifaar*/ zero. ‖ *ṣifr[a] ɛaf-ʃimaal* (zero written on the left-hand side) something completely worthless.

صفر *ṣafar* /n/ Safar, second month of the Muslim year.

ص ف ص ف [1]

صفصاف *ṣafṣaaf, ṣufṣaaf* /coll n/ willow(s). *ṣafṣaaf baladi* Egyptian willow (Salix safsaf). *ṣafṣaaf ʔumm if-fuɛuur* weeping willow (Salix babylonica).

صفصافة *ṣufṣaafa* /unit n, pl *-aat*/ a willow.

ص ف ص ف [2]

صفصف *ṣafṣaf[1], ṣafṣif* /vi/ to become depleted or whittled away. *ʔil-balad ṣafṣafit ɛaleena* we're the only ones left in the village. *ʔil-ḥikaaya ṣafṣafit ɛala ma-fii-ʃ* the matter came to nothing. - vn *ṣafṣafa*; ava *miṣafṣaf*.

ص ف ص ف [3]

صفصف *ṣafṣaf[2]* /prop n/ nickname for Mustafa or Safiya.

ص ف ط see س ف ط

ص ف ع

صفع *ṣafaɛ*↑ *(a)* /vt/ to slap. - vn *ṣafɛ*; ava *ṣaafiɛ*; pva *maṣfuuɛ*.

صفعة *ṣafɛa* /n pl *-aat*/ slap.

اتصفع *ʔitṣafaɛ* or *ʔiṣṣafaɛ* /vi/ to be slapped. - iva *mitṣifiɛ*.

ص ف ف

صفّ *ṣaff[1] (u)* /vt/ **1** to put in a row. ‖ *ṣaff[i] ḥuruuf* type-

setting. **2** to arrange. *xallii-na nṣuff ik-karaasi* let's arrange the chairs. - vn *ṣafafaan, ṣaff*; ava *ṣaafif*; pva *maṣfuuf*.

صفّ *ṣaff*[2] /n pl *ʔaṣfuf, ṣufuuf, ṣufúfa*↓/ **1** row, line, rank. *nazzil ṣaff*[i] *snaan-i* he knocked my teeth out. ‖ *rayyis ṣaff* head chef. - *ṣaff*[i] *ẓaabiṭ* non-commissioned officer. - *huwwa f-ṣaff-i* he's on my side. **2** grade, form (in school).

صفّة *ṣuffa* /n pl *ṣufaf*/ *[rur]* alcove raised above floor level.

صفّاف *ṣaffaaf: ṣaffaaf ḫuruuf* typesetter.

مصفّ *maṣaff* /n pl *-aat*/ rack, holder (as, e.g., that which a peddler of cold drinks wears attached to his wrist and in which he puts his glasses).

صفّف *ṣaffaf* /vt/ to arrange. *miin illi ḫa-yiqdar yiṣaffaf ik-karaasi di kull-a-ha* who will be able to arrange all these chairs? *ʔil-bint*[i] *mṣaffifa ʃaɛr-a-ha* the girl has done her hair. - vn *taṣfiif*; ava/pva *miṣaffaf*.

اصطفّ *ʔiṣṭaff*↑ /vi/ to line up. *ʔiṣṭaff ig-gamiiɛ fi-ṭabuur* everyone formed up into a line. - vn *ʔiṣṭifaaf*; ava *miṣṭaff*.

ص ف ق

صفقة *ṣafqa* /n pl *-aat*/ deal, bargain.

صفّق *ṣaffaq*↑ /vi/ to applaud, clap the hands. - vn *taṣfiiq*; ava *miṣaffaq*.

اتصفّق *ʔitṣaffaq* or *ʔiṣṣaffaq* /vi/ (impersonal) passive of *ṣaffaq*. *ʔahu da l-baṭal illi yistaahil ʔinnu yitṣaffaq-lu* this is the champion who deserves to be applauded. - iva *mitṣaffaq*.

ص ف و see ص ف ى : *ṣafwa*

ص ف ى

صفى *ṣifi (a)* /vi/ to become clear. *ʔil-mayya l-ɛikra tiṣfa b-fabba* turbid water becomes clear with (the use of) alum. ‖ *ʔil-gaww*[i] *ṣfii-lu* he had a clear field (in which to act). - vn *ṣafa, ṣafw*; ava *ṣaafi*.

¶ *ṣifi ɛala* to come down to, be reduced to. *baɛd id-dihn*[i] *kiilu l-laḥma ṣifi ɛala ʔaqall*[i] *min in-nuṣṣ* after (removing) the fat, the kilo of meat came down to less than half (a kilo).

صفا *ṣafa* /imper/ *[mil]* at ease!

صافى *ṣaafi* /adj */ **1** pure, unsullied, unblemished. *sumɛa ṣafya* an unsullied reputation. *ʔazraq ṣiini ṣaafi* clear Chinese blue. ‖ *ṣaafi ya laban* (pure milk!) all's well now! we've settled our dispute! **2** net. *ʔil-wazn iṣ-ṣaafi* the net weight.

صفوة *ṣafwa*↑ /n/ elite, best (of people). *ṣafwit il-maɛbuud* the chosen of God.

صفيان *ṣafyaan* /adj/ emaciated, sickly.

أصفى *ʔaṣfa* /el/ more/most unsullied or unblemished.

صفاية *ṣifaaya, ṣifaaya* /n pl *-aat, -aat*/ **1** remnant, remains. *yinaqqu l-ʔawwil wi-baɛdeen yidduu-na ṣ-ṣifaaya* they make their selection first and then give us what is left. **2** *[rur]* water still in an irrigation canal after it has been blocked at the mouth (the amount of water being calculated in order to avoid flooding the crops).

صفّاية *ṣaffaaya, ṣaffaaya* /n pl *-aat, -aat*/ strainer. *ṣaffaayit ʃaay* tea strainer. *ṣaffaayit ṭibaaq* dish-draining rack.

مصفى *maṣfa* /n pl *maṣaafi*/ **1** filter, strainer, colander. **2** drainage channel of a field.

صفّى *ṣaffa* /vt/ **1a** to strain. *nusluq il-makarọona w-baɛdeen niṣaffii-ha* we boil the pasta and then strain it. **1b** to drain. *baɛd itnaafar saaɛa min il-bidaar niṣaffi l-ʔarḍ*[i] *min il-mayya* twelve hours after sowing we drain the land of water. ‖ *ḍarab-u buks*[i] *ṣaffaa-lu ɛeen-u* he punched him and put out his eye. **2** to settle, straighten out. *laazim il-mudiir yiṣaffi ḥsaab-u yomiyyan* the director must settle his account daily. *ṣaffu l-xilaaf* they settled (their) differences. **3** to liquidate. *ṣaffu ʔamlak-hum wi-safru* they sold up their property and left. ‖ *taṣfiyit il-muusim* stocktaking sale. - *mubarayaat taṣfiyya* elimination matches (in a contest or championship). **4** *[naut]* to coil (a rope). - vn *taṣfiyya, taṣfiya*; ava/pva *miṣaffi*.

تصافى *taṣaafi* /pl n/ final remains (of, e.g., a stock of merchandise). *mayyit it-taṣaafi [rur]* water remaining in the main irrigation canals at the end of the irrigation cycle. - /adverbially/ *ʔil-mayya nazla taṣaafi* the water is trickling slowly down.

مصفّى *miṣaffi* /adj */ pure. ‖ *ʔibn*[i] *ḥalaal miṣaffi* a thoroughly good fellow.

اتصفّى *ʔitṣaffa* or *ʔiṣṣaffa* /vi/ passive of *ṣaffa*. - iva *mitṣaffi*.

صافى *ṣaafa* /vt/ to be faithful or true to. ‖ *dahr-i ṣafaa-ni* life is being good to me. - vn *miṣafiyya*; ava *miṣaafi*.

اتصافى *ʔitṣaafa* or *ʔiṣṣaafa* /vi/ passive of *ṣaafa*. - ava *mitṣaafi*.

اصطفى *ʔiṣṭafa* **1** /vt/ to choose, select. *rabb-i-na ṣṭafaa min been in-naas* God has singled him out (for his favours). **2** /vi/ to settle differences, effect a reconciliation. *ʔiṣṭafu maɛa baɛḍ* they became reconciled. *ʔiṣṭifi maɛaa* you deal with him! (I can't bear to). - ava *miṣṭifi*.

المصطفى *ʔil-muṣṭafa* /n/ the Chosen One (epithet of the Prophet Muhammed).

ص ق ر

صقر *ṣaqr* /n pl *ṣuquur, ṣuqúra*/ falcon. ‖ *ʃanab-u yuqaf*

ʕalee ʕiṣ-ṣaqr (a falcon could perch on his moustache) ≈ he has a thick and luxuriant moustache (regarded as a sign of virility).

ص ق ط ط see ص غ ر : ṣuqaṭṭaṭ, ṣuqaṭṭuuṭ

ص ق ل [1]
صقل ṣaqal (i) /vt/ 1 to burnish (metal). 2 to finish (concrete). - vn ṣaqil; ava ṣaaqil; pva maṣquul.
مصقلة maṣqala /n pl maṣaaqil/ burnishing block or steel.
اتصقل ʔitṣaqal or ʔiṣṣaqal /vi/ 1 to be burnished (of metal). 2 to be finished (of concrete). - iva mitṣiqil.

ص ق ل [2] see س ق ا ل

ص ق ن ط ط see ص غ ر : ṣuqanṭaṭ, ṣuqanṭuuṭ

ص ك ك [1]
صكّ ṣakk /n pl ṣukuuk/ [leg] proof of contract, receipt. ʔil-mustanadaat di b-tuʕtabar ṣakk[a] ʕala l-ḥukuuma these documents are considered binding on the government.

ص ك ك [2] see س ك ك [1]

ص ل see و ص ل : ṣila

ص ل ب [1]
صلب ṣalab[1] (u) 1 /vt/ to stiffen into an upright position, make upright. ‖ṣalab ṭuul-u (or ḥeel-u) he stood up straight. -ṣalab-ni ʕal-baab nuṣṣ[i] saaʕa he kept me waiting at the door for half an hour. — /vi/ 2 to be stiff, be in an upright position. markib ṣaalib a ship in (proper) upright position (i.e. not listing). 3 to last (well), be of continuing use. ʔil-kursi da ḥa-yuṣlub maʕaak that chair will last you well. - vn ṣalb, ṣalabaan; ava ṣaalib; pva maṣluub.
صلب ṣulb /n/ 1 steel. 2 core, central part. ṣulb il-baḥṣ the core of the research. ‖huwwa-bn-u min ṣulb-u he's his father's son. — /adj invar/ 3 solid, stiff, hard. da xaʃab ṣulb that is very hard wood. 4 dependable. walad ṣulb a reliable boy.
صلب ṣilib, ṣalib[ʔ] /adj */ 1 stiff, inflexible. ‖huwwa ṣilib ir-raʔy or dimaaɣ-u ṣilib he's obstinate, he's pig-headed. 2 tough, hard. mawaadd[i] ṣaliba solids.
أصلب ʔaṣlab /el/ harder/hardest.
صلابة ṣalaaba /n/ 1 hardness, toughness. 2 stamina, endurance.
صلابة ṣilaaba /n pl -aat, -aat/ prop, support.
اتصلب ʔitṣalab[1] or ʔiṣṣalab[1] /vi/ to become or be made upright. - ava/iva mitṣilib.
صلّب ṣallib[1] 1 /vt/ to fix firmly in position. laɛeet-u mṣallib raas-u fil-baab wi-bi-yzuɛɛ I found him wedging his head against the door and pushing. ‖leeh tiṣallib raʔy-ak kida why are you so obstinate? 2 /vi/ to become stiff. raɛabt-i ṣallibit mir-rumatizm my neck got stiff because of rheumatism. - vn taṣliib; ava/pva miṣallib.
تصليبة taṣliiba /n pl taṣaliib/ prop, support.
اتصلّب ʔitṣallib[1] or ʔiṣṣallib[1] /vi/ 1 to become hard or stiff. taṣallub if-farayiin arteriosclerosis. 2 to be fixed firmly. - vn taṣallub[ʔ]; ava/iva mitṣallib.

ص ل ب [2]
صلب ṣalab[2] (u) /vt/ to crucify. - vn ṣalb; ava ṣaalib; pva maṣluub.
صليب ṣaliib /n pl ṣulbaan/ cross. ʔiṣ-ṣaliib il-ʔaḥmar the Red Cross. ɣurzit iṣ-ṣaliib [needlew] cross-stitch. ‖ʕiid iṣ-ṣaliib [Chr] Finding of Holy Cross Day (September 27). -ṣaliib faaḍi and ṣaliib malyaan wooden lattice-work patterns (see Pl.G, 2, 3).
صليبة ṣaliiba, ṣaliiba /n pl ṣalaayib/ cross piece. muftaaḥ ṣaliiba [auto] wheel spanner. ʔiṣ-ṣaliiba [anat] part of a ruminant's stomach having a honeycomb-like appearance; honeycomb tripe.
صليبي ṣaliibi /adj */ pertaining to crusades or crusaders. ʔil-ḥuruub iṣ-ṣalibiyya the Crusades.
اتصلب ʔitṣalab[2] or ʔiṣṣalab[2] /vi/ to be crucified. - iva mitṣilib.
صلّب ṣallib[2] /vi/ 1 [Chr] to make the sign of the cross. ʔil-ɢassiis ṣallib ʕal-mayyitiin the priest made the sign of the cross over the dead. 2 [acad] to make a cross beside or through incorrect work. - vn taṣliib; ava miṣallib.
اتصلّب ʔitṣallib[2] or ʔiṣṣallib[2] /vi/ (impersonal) passive of ṣallib[2]. ʔil-maɣbaḥ itṣallib ʕalee the sign of the cross was made over the altar. - iva mitṣallib.

ص ل ب [3]
صلّب ṣallib[3], ṣallab /vt/ to fasten flimsily together. ṣallab-li g-gazma l-ɣaayit ma ʔawṣal il-beet just fix me the shoes so that they'll hang together till I get home. - vn taṣliib; ava/pva miṣallab.
مصلّب miṣallab /adj */ 1 flimsily hanging together. 2 on the point of tears.
اتصلّب ʔitṣallab or ʔiṣṣallab /vi/ 1 to be flimsily fastened together. 2 to (be ready to) seize upon a pretext. ʔitṣallib-lu ʕala kilma w-raaḥ ḍarab-u he picked on one word he said and went and hit him for it. - ava/iva mitṣallab.

متصلّب *mitṣallab* or *miṣṣallab* = *miṣallab*.

ص ل ب ط see س ل ب ط

ص ل ح

صلح *ṣalaḥ*[1] *(u, a)* /vi/ to be suitable, be fit. *ṣaaliḥ lil-istiʕmaal* fit for use. *huwwa sakraan ma-yuṣluḥ-ʃ*[i] *lil-ʕamal* he's drunk, he's not fit to work. ‖*ʃin ma-kan-ʃ*[i] *yiṣlaḥ ṭabla yiṣlaḥ ṭaar [prov]* if it won't serve one purpose it will serve another (said of something apparently useless). - vn *ṣalaḥaan, ṣalaḥiyya*; ava *ṣaaliḥ*.

صلح *ṣalaḥ*[2] *(i)* /vt/ **1** to reform, set right. ‖*ʃallaah yiṣliḥ ḥaal-ak* (may God set your affairs aright) a polite way of seeking to silence someone. **2** to make peace between. - vn *ṣulḥ*; ava *ṣaaliḥ*; pva *maṣluuḥ*.

صلح *ṣulḥ* /n/ reconciliation. *muʕahdit ṣulḥ* peace treaty.

صلحة *ṣulḥa* /n/ **1** reconciliation. **2** *[magic]* charm carried by a possessed person in order to make peace with the possessing spirit(s).

صالح *ṣaaliḥ*[1] **1** /adj */ worthy, upright. *ʃil-ʃaʕmaal iṣ-ṣalḥa* good deeds. **2** /n/ benefit, interest. *li-ṣaaliḥ il-gamiiʕ* for the good of everybody. *ʃiṣ-ṣaaliḥ il-ʕaamm* the common good. ‖*ma-lii-ʃ ṣaaliḥ* I'll have nothing to do with it!

الصالحيّة *ʃiṣ-ṣalḥiyya* /prop n/ es-Salihiya, a town in Sharqiya known in particular for its sweet melons.

صالحاوى *ṣalḥaawi* **1** /adj/ of or pertaining to es-Salihiya. **2** /n/ variety of large very sweet water-melon from the area around es-Salihiya.

صلّح *ṣallaḥ*[1] /n/ game in which one player stands with his back to the others, one hand showing under his armpit; another player then slaps his hand and the first player has to guess who it was.

أصلح *ʔaṣlaḥ*[1] /el/ **1** more/most suitable or fitting. **2** more/most correct.

صلاح *ṣalaaḥ* /n/ up rightness, righteousness. *ʃit-tarbiyya min il-ʔabaaʔ wiṣ-ṣalaaḥ min allaah [prov]* upbringing is from parents but righteousness is from God.

صلاحية *ṣalaḥiyya, ṣalaḥiyaʔ* /n/ suitability. *ʃihaadit iṣ-ṣalaḥiya* certificate of proficiency (an in-service training certificate awarded to teachers without appropriate qualifications).

مصلحة *maṣlaḥa* /n pl *maṣaaliḥ*/ **1** interest, welfare. *ʃil-maṣlaḥa l-ʕamma* the common good. *liyya maṣlaḥa fil-ḥikaaya* I'm an interested party in the affair. *min maṣlaḥt-ak ʃinnak tibiiʕ-u* it's in your interest to sell it. **2** affair, matter. *ʃaruuḥ il-wizaara ʃaqḍi maṣlaḥa* I'm going to the Ministry to see to some business. *ʃana ʕaṣd-ak fi-maṣlaḥa* I've come to see you about something. **3** government agency or department. *maṣlaḥit il-misaaḥa* the Survey Department.

مصلحى *maṣlaḥi* /adj */ pertaining to government departments, official.

مصلحجى *maṣlaḥgi* /adj pl *-yya*/ opportunist, self-seeking.

اتصلح *ʃitṣalaḥ* or *ʃiṣṣalaḥ* /vi/ **1** to be reformed, be set right. **2** to be or become reconciled. - ava/iva *mitṣiliḥ*.

اتصلح *ʃinṣalaḥ* = *ʃitṣalaḥ*. - iva *minṣiliḥ*.

صلّح *ṣallaḥ*[2] /vt/ **1** to mend, repair. *ʃin-naggaar ṣallaḥ it-tabuut* the carpenter fixed the water-wheel. *ʃumm-i ḥa-tṣallaḥ il-babuur ʕand is-samkari* my mother will have the primus stove mended at the welder's. **2** to improve, correct. *ʃil-waaḥid mumkin yiṣallaḥ-lu tultumiit kurraasa fil-ʃusbuuʕ* one may (have to) correct (up to) three hundred exercise books in one week. **3a** to adjust. *bi-yṣallaḥ ik-koora ʕal-ʃarḍ* he positions the ball on the ground. **3b** to tune (a musical instrument). **4** to even out, level. *baʕd it-taqriiṣ ṣallaḥi l-wiff* after you've made the dough into discs, even out the tops. ‖*ṣallaḥ-lu ʔafaa* give him a slap on the back of the neck. - vn *taṣliiḥ*; ava/pva *miṣallaḥ*.

تصليح *taṣliiḥ* /n pl *-aat*/ repair.

اتصلّح *ʃitṣallaḥ* or *ʃiṣṣallaḥ* /vi/ passive of *ṣallaḥ*[2]. - ava/iva *mitṣallaḥ*.

صالح *ṣaaliḥ*[2] /vt/ **1** to reconcile. *ma-ḥadd*[i] *-ʃ yiqdar yiṣaliḥ-hum maʕa baʕḍ* no one can get them together again. *ʃin-naas ṣalḥuu-hum ʕala baʕḍ* people reconciled them. **2** to make up with. *ʃin ʃabuu-ya zaʕʕal-ni ʃumm-i tṣaliḥ-ni* if my father upsets me, my mother makes it up with me. - vn *miṣalḥa*; ava *miṣaaliḥ*.

مصالحة *muṣalḥa* /n pl *-aat*/ reconciliation.

اتصالح *ʃitṣaaliḥ* or *ʃiṣṣaaliḥ* /vi/ **1** to be reconciled. **2** to be comforted. - vn *taṣaaluḥ*ʔ; iva *mitṣaaliḥ*.

تصالح *taṣaaluḥ* /n/ *[leg]* settlement out of court.

أصلح *ʔaṣlaḥ*[2]ʔ = *ṣalaḥ*[2]. *ʃid-dawa da muṣliḥ lil-miʕda* this medicine is good for the stomach. - vn *ʃiṣlaaḥ*; ava *muṣliḥ*.

إصلاحيّة *ʃiṣlaḥiyya* (also *ʃiṣlaḥiyyit ʃaḥdaas*) /n pl *-aat*/ (boys') reformatory, remand home.

اصطلح *ʃiṣṭalaḥ* /vi/ **1** to make up, become reconciled. *ʃiṣṭalaḥt*[i] *maʕaaha taani* I became reconciled with her again. **2** to agree, decide (upon s.th.). *laazim niṣṭiliḥ ʕala ramz*[i] *muʕayyan* we must agree on a certain sign. - vn *ʃiṣṭilaaḥ*; ava *miṣṭiliḥ*.

اصطلاح *ʃiṣṭilaaḥ* /n pl *-aat*/ expression, (technical) term.

مصطلح *muṣṭalaḥ* /n pl *-aat*/ (technical) term.

استصلح ʔistaṣlaḥ /vt/ **1** to consider correct. **2** to render fit (for use). *ʔistiṣlaaḥ il-ʔaraaḍi* land reclamation. **3** to select for correctness. - vn *ʔistiṣlaaḥ*; ava *mistaṣlaḥ*; pva *mustaṣlaḥ*.

ص ل د

صولد *ṣuld* <Fr *solde*> /n/ **1** all ready cash (on one's person). **2** collection of money or chips with which one is playing (in gambling).

ص ل د ى

صلدى *ṣuldi* <It *soldi*> /n pl *ṣalaadi*/ *[obsol]* small coin worth one-fifth of a piastre.

ص ل س ت

صوليست *ṣulist* <Fr *soliste*> /n/ vocal or instrumental soloist.

ص ل ص

صلصة *ṣalṣa* <It *salsa*> /n pl *-aat*/ tomato purée. ‖ *di ʔumuur ṣalṣa* this is a farce! - *ʔil-ḥikaaya baqit ṣalṣa* it turned out a mess.

ص ل ص ل [1]

صلصل *ṣalṣal* /vi/ to ring. *ṣalṣalit ig-garas* the ringing of the bell. - vn *ṣalṣala*; ava/pva *miṣalṣal*.

ص ل ص ل [2]

صلصال *ṣalṣaal, ṣilṣaal* /n/ plasticine.

ص ل ط ح

صلطح *ṣalṭaḥ* (also *salṭaḥ*) /vt/ **1** to flatten. *wabuur iz-zalaṭ bi-yṣalṭaḥ if-faariɛ* the steam-roller flattens the road (surface). *qafaa miṣalṭaḥ* the back of his head is flat. **2** to lay flat. *ṣalṭaḥt[i] gism-i ɛak-kanaba w-nimt* I stretched myself out on the sofa and fell asleep. *ṣalṭaḥu l-ɛayyaan ɛala ṭarabeezit il-ɛamaliyyaat* they laid the patient on the operating table. — /vi/ **3** to lie down. *ʔil-ɛummaal ṣalṭaḥu taḥt[i] ʃagara* the labourers lay down to rest under a tree. - vn *ṣalṭaḥa*; ava/pva *miṣalṭaḥ*.

مصلطح *miṣalṭaḥ* /adj */ flat. ‖*ṣaḥn[i] mṣalṭaḥ* plate.

اتصلطح ʔitṣalṭaḥ or ʔiṣṣalṭaḥ /vi/ **1** to lie down. **2** to be flattened. **3** to be laid down. - ava/iva *mitṣalṭaḥ*.

ص ل ع

صلع *ṣalaɛ* /n/ baldness.

صلعان *ṣalaɛaan* /n/ baldness.

أصلع ʔaṣlaɛ /adj, fem *ṣalɛa*, pl *ṣulɛ*/ bald.

اصلّع ʔiṣlaɛɛ /vi/ to become bald. - ava *miṣlaɛɛ*.

ص ل ف

صلف *ṣalaf* /n/ arrogance.

صلافة *ṣalaafa* /n/ arrogance.

اتصالف ʔitṣaalif or ʔiṣṣaalif /vi/ to behave arrogantly. - ava *mitṣaalif*.

ص ل ق ط

صلقط *ṣalqaṭ* (also *salqaṭ*): *(fi-)ṣalqaṭ (fi-)malqaṭ* in every single possible or conceivable place, as in *dawwart[a] ɛaleeha ṣalqaṭ fi-malqaṭ ma-laqet-haa-ʃ* I looked high and low for her but I couldn't find her.

ص ل ل see ص ل و: *miṣalla, muṣalliin*

ص ل و

صلاة *ṣala, ṣalaah*↑ /n, constr *ṣalaat*, pl *ṣalawaat*↑/ **1** *[Isl]* ritual prayer. *ṣalaat il-fagr* dawn prayer. **2** *[Chr]* prayer. *ʔiṣ-ṣala r-rabbaniyya* the Lord's Prayer. ‖*ṣalaat il-qandiil* see *qandiil*. **3** *ʔiṣ-ṣala* the set of five ritual prayers in Islam. **4** blessing (of God on the Prophet). *ya ṣalaat in-nabi* O blessing of the Prophet! (exclamation used in, e.g., warding off the evil eye, expressing deprecation, dismissing a request). *ɛaleehi ṣ-ṣalaatu was-salaam* may blessing and peace be upon him (i.e. the Prophet Muhammad, in response to *ṣalli ɛan-nabi*, q.v. below under *ṣalla*).

صلّى *ṣalla* **1** /vt/ to pray (fixed prayers). *ṣalleet il-fagr [Isl]* I prayed the dawn prayer. *bi-nṣalli l-quddaas marriteen kull[i] yoom ḥadd* we celebrate the liturgy twice every Sunday. ‖*mayya mṣalliyya [Chr]* consecrated water. **2** /vi/ to pray. *fiḍilt[i] ʔaṣalli lamma ḥaṣal-li w-lamma ḥaṣal-li baṭṭalt[i] ʔaṣalli [prov]* I went on praying till I got what I wanted, and when I got what I wanted I stopped praying. *ṣallaa-li w-ʔana ɛayyaan [Chr]* he prayed for me when I was sick. - ava/pva *miṣalli*.

¶*ṣalla ɛala* **1** *[Isl]* to invoke a blessing on. *ṣalli ɛan-nabi [Isl]* (bless the Prophet!) (1) exclamation of wonder or delight, as in *ʔaadi l-ɛaruusa ṣalli ɛan-nabi ʔaaxir gamaal* there's the bride! my! isn't she beautiful. (2) calm yourself! *ṣalli ɛala lli yiffaɛ fiik [Isl]* (bless him (Muhammad) who has compassion on you) formula used (1) at the beginning of an explanation or piece of advice. (2) as a conciliatory interjection. **2** *[Chr]* to pray over. *ʔil-qassiis bi-yṣalli ɛala l-mariiḍ wi-b-yirfim-u biz-zeet* the priest prays over the sick man and anoints him with oil. — *ṣalla bi- [Isl]* to lead in prayer. *ʔil-ʔimaam ṣalla bin-naas* the imam led the people in prayer.

مصلّى *miṣalla* = *miṣalliyya*.

مصلّية *miṣalliyya, maṣalliyya* /n pl *-aat*/ **1** prayer mat. **2** place for prayer (not having a pulpit).
مصلّين *muṣalliin, muṣalliyyiin* /pl n/ congregation.
اتصلى *ʔitṣalla* or *ʔiṣṣalla* /vi/ (impersonal) passive of *ṣalla*. *ʔil-ʕayyil itṣalla ʕalee* prayers were said over the child. - iva *mitṣalli*.

(ص ل و ن)
صالون *ṣaloon*[1], *ṣaluun*[1] <Fr *salon*> /n pl *-aat*/ **1a** drawing room, sitting room. **1b** sitting-room suite. **2** hairdresser's establishment. *ṣaloon tagmiil* beauty parlour. *ṣaluun ḥilaaqa* barber's shop. **3** saloon car (in a train).
صالون *ṣaloon*[2], *ṣaluun*[2] <Engl> /n/ saloon car.

[1] (ص ل ى)
صلاية *ṣalaaya*[1] /n pl *-aat*/ *[rur]* wooden mortar and pestle.
صلاية *ṣalaaya*[2] /n/ colostrum, beestings.

[2] ص ل ى see ص ل و : *ṣalla, miṣālliyya, muṣalliin, muṣalliyyiin, ʔitṣalla*

ص م ا ل
الصومال *ʔiṣ-ṣumaal* /prop n/ Somalia.
صومالى *ṣumaali* **1** /adj */ pertaining to Somalia. *laḥm*[i] *ṣumaali* meat imported from Somalia. **2** /n */ national of Somalia.

ص م ت
صمت *ṣamatˀ (u)* /vi/ to become silent. *film*[i] *ṣaamit* a silent film. - vn *ṣamt*; ava *ṣaamit*.
صمت *ṣamt* /n/ silence. *ʔiṣ-ṣamt*[i] *zeen wis-sukuut salaama [prov]* silence is best and safest.
مصمت *muṣmat* /adj */ solid, not hollow.

ص م د
صمد *ṣamad*[1] *(u)* /vi/ to hold out, put up resistance. *niqdar nuṣmud liḍ-ḍavṭ il-iqtiṣaadi* we can stand up to economic pressure. - vn *ṣumuud*; ava *ṣaamid*.
صمد *ṣamad*[2] /n/ Everlasting One (epithet of God).
الصمدية *ʔiṣ-ṣamadiyya* /n/ popular name for the Koranic *suurit il-ʔixlaaṣ*.

ص م ر
صمر *ṣamar, samar*[3] <Gr *samari*> /n/ saddle felt.

ص م ع
صومعة *ṣumáʕa* /n pl *ṣawaamiʕ*/ **1** dome-shaped coop made of mud (see Pl.C, 5). **2** grain store made of mud (see Pl.C, 4).

ص م غ see س م غ : *ṣamɣ, ṣamɣi, ṣammaɣ, ʔitṣammaɣ, taṣammuɣ*

[1] ص م ل
صمل *ṣamal (u)* /vi/ to endure. *ʔiṣ-ṣadaaqa benhum ma-ṣamalit-f*[i] *sana* their friendship didn't last a year. ‖ *ʔil-fuul bi-yuṣmul ma-yxallii-f il-waaḥid yiguuʕ bi-surʕa* beans stick to your ribs, you don't get hungry again quickly. - vn *ṣaml, ṣamalaan*; ava *ṣaamil*.
صملان *ṣamlaan* /adj */ enduring.
صمّل *ṣammal* /vt/ *[rur]* to reheat, re-bake (bread). - vn *taṣmiil*; ava/pva *miṣammil*.
اتصمّل *ʔitṣammil* or *ʔiṣṣammil* /vi/ *[rur]* to be reheated, or re-baked (of bread). - vn *mitṣammil*.

[2] ص م ل see ص م و ل : *ṣamuula*

[3] ص م ل see ص م ا ل : *ʔiṣ-ṣumaal, ṣumaali*

ص م م
صم *ṣamm (u)* /vt/ **1** to close up, narrow up. *ṣumm*[i] *ʃafayf-ak* purse your lips. ‖ *ṣammeet widaan-ak ʕan il-ḥaqq* you turned a deaf ear to the truth. **2** to learn by heart, memorize, *ʃawwil ma yaaxud dars*[i] *yṣumm-u fil-ḥaal* as soon as he gets a lesson he learns it by heart. — /vi/ **3** to close up, become non-porous. *ʔil-ʔarḍ*[i] *di ṣammit laazim nuḥuṭṭ-i-lha raml* this earth has become very hard; we should add sand to it. - vn *ṣamm, ṣamamaan*; ava *ṣaamim*; pva *maṣmuum*.
أصمّ *ʔaṣamm* /adj, fem *ṣammaaʔ*, pl *ṣumm*/ deaf. *dool gamaaʕa ṣumm*[i] *bukm* (they are deaf and dumb) (1) ≈ they are (as stupid as) dumb beasts. (2) ≈ they are wise and trustworthy (because they keep their mouths shut).
صمام *ṣimaam* /n pl *-aat*/ valve, tube (of a radio and the like). ‖ *mizaan iṣ-ṣimaam* straw float (in angling).
صمامة *ṣimaama* /n pl *-aat*/ **1** stopper, bung. **2** valve.
صميم *ṣamiim* **1** /n/ heart, core, innermost part. *bi-ṭḥibb-u min ṣamiim ʕalb-a-ha* she loves him from the bottom of her heart. *ḍarba fiṣ-ṣamiim* a shattering blow. *ʔitbaḥisna f-ṣamiim il-muʃkila* we discussed the case thoroughly. **2** /adj/ genuine, true. *maṣri ṣamiim* an Egyptian through and through.
صمّام *ṣammaam* /n */ **1** one who learns by rote. **2** swot, grind.
اتصمّ *ʔitṣamm* or *ʔiṣṣamm* /vi/ passive of *ṣamm*. - iva *mitṣamm*.
انصمّ *ʔinṣamm* = *ʔitṣamm*. - iva *minṣamm*.
صمّم *ṣammim* **1** /vt/ to design. *muhandis kibiir ṣammim luhum il-ʕimaara* an eminent architect designed the

building for them. **2** /vi/ **2a** to resolve, determine. *min ʕawwil ḥayaat-i w-ʕana mṣammim (ɛala) ʕinni ʕabqa kaatib* I've been determined to be a writer all my life. **2b** to insist. *ṣammimt (ɛala) innu yiigi maɛaana* I insisted that he come with us. - vn *taṣmiim*; ava *miṣammim*.

تصميم *taṣmiim* /n pl *-aat*/ design. *taṣmiim ḥasab ṭalab ṣaaḥib il-ɛimaara* a design according to the wish of the owner of the building.

مصمّم *muṣammim* /n */ designer. *muṣammim ʕazyaaʕ* fashion designer.

اتصمّم *ʕitṣammim* or *ʕiṣṣammim* /vi/ passive of *ṣammim*. - iva *mitṣammim*.

ص م و ل

صامولة *ṣamuula* <poss T *somun*> /n pl *ṣawamiil*/ nut (of a bolt). ‖*ṣawamiil muxx-u mafkuuka* he has a screw loose.

ص ن ب ر

صنبور *ṣanbuur*↑ /n pl *ṣanabiir*/ tap, faucet.

ص ن ت

صنّيت *ṣanniit* /n pl *ṣanniita*/ eavesdropper.

اتصنّت *ʕitṣannat* or *ʕitṣṣannat* /vi/ to listen to, eavesdrop. *ɛaamil is-siwitʃ[1] b-yitṣannat ɛaleena* the switchboard operator is eavesdropping on us. - vn *taṣannuṭ*; ava *mitṣannaṭ*.

ص ن ت ى see س ن ت ى

ص ن ج

صنج *ṣanag* /n/ deafness.

أصنج *ʕaṣnag* /adj, fem *ṣanga*, pl *ṣung*/ deaf.

اصنجّ *ʕiṣnagg* /vi/ to become deaf. *ʕinta ṣnaggeet* have you become deaf! - ava *miṣnigg*.

ص ن د ر see س ن د ر

ص ن د ق see س ن د ق

(ص ن د ل)

صندل *ṣandal[1]* <Engl> /n pl *ṣanaadil*/ (pair of) sandals.

صندل *ṣandal[2]* <cf Gr, P, T, It> /n pl *ṣanaadil*/ **1** lighter, unpowered barge. **2** pontoon.

صندل *ṣandal[3]* /n/ sandalwood.

ص ن ر see ص ن ن ا ر : *ṣunnaara, ṣinnaara*

ص ن ط ر see [1] س ن ط ر : *ṣanṭar, ṣinṭar*

ص ن ع

صنع *ṣanaɛ (a)* /vt/ **1** to manufacture, make. *ʕil-libad di maṣnuuɛa min il-goox* these caps are made of felt. - /the literary passive imperfect occurs/ *kull il-ḥagaat di tuṣnaɛ fil-hind* all of these things are made in India. ‖*beeni w-beenu ma ṣanaɛ il-ḥaddaad* ≈ he and I are at daggers drawn. **2**↑ to carry out, perform. *ʕiṣnaɛ fiyya maɛruuf* do me a favour. - vn *ṣunɛ, ṣinaaɛa*; ava *ṣaaniɛ*; pva *maṣnuuɛ*.

صنعة *ṣanɛa* /n pl *ṣunaɛ, ṣanaayiɛ*/ **1** trade, craft, occupation. *ṣanɛa ḥilwa* a good trade (to be in). ‖*sabaɛ ṣanaayiɛ wil-baxt[1] ḍaayiɛ [prov]* ≈ all one's skills will not compensate for bad luck. **2** art, (acquired) skill, craftsmanship. ‖ *ʕit-tuql[1] ṣanɛa [prov]* ≈ coquettish dalliance is an art. - *bi-ṣanɛit laṭaafa* with persuasive charm.

صناعة *ṣinaaɛa* /n pl *-aat, ṣanaayiɛ*↑/ **1** craft, skill. *madrasit il-funuun wiṣ-ṣanaayiɛ* the School of Arts and Crafts. **2** industry. **3** manufactured product.

صناعى *ṣinaaɛi* /adj */ **1** industrial. *ʕintaag ṣinaaɛi* industrial production. **2** processed. *laban ṣinaaɛi* powdered milk (for babies). **3** artificial. *ḥariir ṣinaaɛi* synthetic silk. *sinaan ṣinaɛiyya* false teeth.

¶ *ṣinaɛiyyan* /adv/ synthetically, artificially. *mawadd[1] mxallaqa ṣinaɛiyyan* materials made up synthetically.

صانع *ṣaaniɛ* /n pl *ṣunnaaɛ*/ artisan, craftsman.

مصنوعات *maṣnuɛaat* /pl n/ manufactured goods, merchandise. *maṣnuɛaat gildiyya* leather goods.

صنايعى *ṣanayɛi* /n pl *-yya*/ skilled worker, craftsman, artisan.

مصنع *maṣnaɛ* /n pl *maṣaaniɛ*/ factory.

مصنعية *maṣnaɛiyya* /n pl *-aat*/ **1** cost of labour. *ʕid-dibla bi-tkallif ʕarbaɛa gneeh dahab wi-gneeh maṣnaɛiyya* the ring costs four pounds for the gold and a pound for the labour. **2** workmanship, craftsmanship.

اتصنع *ʕitṣanaɛ* or *ʕiṣṣanaɛ* /vi/ passive of *ṣanaɛ*. - iva *mitṣiniɛ*.

صنّع *ṣannaɛ* /vt/ **1** to fashion, shape. *nibtidi nṣannaɛ in-naḥaas bif-fakl illi-ḥna ɛayziin-u* we begin to make the brass into the shape we want. **2** to manufacture. **3** to industrialize. - vn *taṣniiɛ*; ava *miṣannaɛ*.

اتصنّع *ʕitṣannaɛ* or *ʕiṣṣannaɛ* **1** /vi/ passive of *ṣannaɛ*. **2** /vt/ to simulate, feign. *bi-yitṣannaɛ in-noom* he pretends to be asleep. - vn *taṣannuɛ*; ava/iva *mitṣannaɛ*.

اصطنع *ʕiṣṭanaɛ* /vt/ to simulate, feign. *ʕiṣṭanaɛit il-kusuuf* she feigned shyness. - vn *ʕiṣṭinaaɛ*; ava *miṣṭiniɛ*; pva *muṣṭanaɛ*.

اصطناعى *ʕiṣṭinaaɛi* /adj */ simulated, put on. *taṣarrufat-ha ʕiṣṭinaɛiyya ɋawi* her behaviour is very unnatural.

ص ن ف

صنف *ṣanf* /n/ **1** /pl *ʕaṣnaaf*/ type, sort. *fii ṣanfeen baljiiki w-ṭalyaani* there are two kinds, Belgian and Italian. ‖*wala ṣanf* ... not a single ..., as in *ʕil-ḥitta ma-fhaa-ʃ wala ṣanf*[i] *bani ʕaadam* there's no one there at all. **2** *ʕiṣ-ṣanf* hashish.

صنّف *ṣannaf, ṣannif* /vt/ **1** to classify. **2** to put together, compile. *ṣannif-li ʃwayyit buharaat wi-ḥyaat-ak* please give me an assortment of spices. *ṣannifit-li qiṣṣa ṭwiila tidḥak biiha ɛalayya* she concocted a long story to pull the wool over my eyes. - vn *taṣniif*; ava/pva *miṣannif, miṣannaf*.

مصنّف *muṣannaf* /n pl *-aat*/ item or piece of music in a variety show. *riqaabit il-muṣannafaat* department in broadcasting for variety show items.

تصنيفة *taṣniifa* /n pl *-aat, taṣaniif*/ assortment, variety.

اتصنّف *ʕitṣannaf* or *ʕiṣṣannaf* /vi/ **1** to be classified, be sorted. *ʕil-kuruut di b-titṣannaf (li-)magmuɛaat* these cards are sorted into groups. **2** to be put together, be compiled. - iva *miṭṣannaf*.

ص ن ف ر

صنفر *ṣanfar* /vt/ **1** to sandpaper, sand. **2** to make (s.o.) refined, polish the manners of (s.o.). - vn *ṣanfara*; ava/pva *miṣanfar*.

صنفرة *ṣanfara* **1** /vn/ ‖ *ʕir-raagil da ɛaayiz ṣanfara* that man's manners need polishing. **2** (also *waraq ṣanfara*) /n/ sandpaper. *waraqit ṣanfara* a piece of sandpaper.

مصنفر *miṣanfar* /adj */ frosted (of glass).

اتصنفر *ʕitṣanfar* or *ʕiṣṣanfar* /vi/ **1** to be sanded, be finished with sandpaper. **2** to be refined, be polished (of, e.g., manners). - vn *tiṣanfiir*; iva *miṭṣanfar*.

تصنفيرة *tiṣanfiira* instance noun of *tiṣanfiir*. *daxal il-faraḥ wi-huwwa miṭṣanfar tiṣanfiira w-ka-ʕinnu l-ɛariis* he came to the wedding dressed immaculately enough to be the bridegroom.

ص ن م

صنم *ṣanam* /n pl *ʕaṣnaam*/ idol. ‖*ya bagam ya ṣanam* ≈ you dumb ox!

صنّم *ṣannim* /vi/ to behave stolidly, dully or mutely. *waaqif miṣannim zayy abu l-hool* standing mute like the Sphinx. - vn *taṣniim*; ava *miṣannim*.

ص ن ن [1]

صنّ *ṣann*[1] *(i, u)* /vi/ *[rur]* to pause, wait. *ṣannit ʃiwayya w-qalit-li laʕʕa* she paused a moment and then said 'No'. *ṣinn*[i] *ʕusbuuɛ wi-taɛalaa-li* wait for a week and come back to me. - vn *ṣann*; ava *ṣaanin*.

ص ن ن [2]

صنّ *ṣann*[2] *(i)* /vi/ to give off a pungent smell. - vn *ṣann, ṣananaan*; ava *ṣaaniṅ*.

صنّة *ṣanna* /n/ strong odour, reek (particularly of urine or onions).

صنان *ṣunaan* = *ṣanna*.

صناّنة *ṣunaana* = *ṣanna*.

صنّن *ṣannin, ṣannan* = *ṣann*[2]. *ʕil-hiduum bi-ṭṣannin mil-ɛaraq* the clothes smell of sweat. - vn *taṣniin*; ava *miṣannan*.

ص ن ن ار

صنّارة *ṣunnaara, ṣinnaara* <T *sinare*> /n pl *ṣananiir*/ **1** fish-hook, (and by extension) fishing tackle. - /adjectivally/ *manga ṣunnaara* type of mango with a hook-like end. **2** *[carp]* finishing nail.

ص ن و ب ر

صنوبر *ṣinoobar* /coll n/ **1** pine(s). **2** pine-nut(s). - also *ṣineebar*.

ص ن ي

صينيّة *ṣaniyya, ṣiniyya* /n pl *ṣawaani*/ **1** tray, salver. **2** oven pan, shallow pan. ‖*ṣaniyyit baṭaaṭis* dish of potatoes (usually with tomatoes and onions) baked in a shallow dish. **3** *[Chr]* paten. **4** any circular object used as a disc for a revolving piece of machinery. **5** traffic circle, roundabout. **6** circular platform. **7** *[print]* galley.

ص ن ي ب ر

صنيبر *ṣineebar* /coll n/ pine-nut(s). - also *ṣinoobar*.

صنيبرة *ṣinebra* /unit n, pl *-aat*/ pine-nut. *ḥalaq ṣinebra* an earring in the shape of a pine-nut.

صنيبراية *ṣinebraaya* = *ṣinebra*.

ص ه

صه *ṣah* /fem n/ fourteenth letter of the Arabic alphabet. - also *ṣaa, ṣaad*.

ص ه د

صهد *ṣahad (a)* /vi/ to be scorched. *ma-ʕaqdar-ʃ aqɛud fiʃ-ʃams*[i] *- wiʃʃ-i yiṣhad min il-ḥarr* I can't sit in the sun; the heat will scorch my face. - vn *ṣahd*; ava *ṣaahid*.

صهد *ṣahd* /n/ blast of heat.

صهدة *ṣahda* = *ṣahd*.

ص ه ر [1]

صهر *ṣahar (a)* /vt/ to melt down, smelt. *ḥadiid maṣhuur* molten iron. - vn *ṣahr*; ava *ṣaahir*; pva *maṣhuur*.

أنصهر ʔinṣahar↑ /vi/ **1** to melt. *daragit il-ʔinṣiḥaar* melting point. **2** to be melted. -vn *ʔinṣihaar*; ava/iva *minṣihir*.

اتصهر ʔitṣahar or ʔiṣṣahar = ʔinṣahar. -ava/iva *mitṣihir*.

ص ه ر [2]

صهر ṣihr /n/ father- or brother-in-law.

صهرات ṣihraat: *min kitrit banaat-u ṣaarit ik-kilaab ṣihraat-u [prov]* he who has many daughters will take even dogs for sons-in-law.

الأصحار ʔil-ʔaṣhaar /pl n/ (all one's) in-laws male and female.

صاهر ṣaahir /vt/ to become related through marriage to (s.o.). -vn *muṣahra*; ava *miṣaahir*.

اتصاهر ʔitṣaahir or ʔiṣṣaahir /vi/ passive of *ṣaahir*. -iva *mitṣaahir*.

ص ه ر ج [1]

صهرج ṣahrig, ṣahrag **1** /vt/ to cause (fire) to blaze up. *ʔir-riiḥ ṣahrigit il-wilɛa* the wind made the fire blaze up. **2** /vi/ to blaze up (of fire). *ʔin-naar ṣahragit* the fire blazed up. -vn *ṣahraga*; ava *miṣahrig, miṣahrag*.

ص ه ر ج [2]

صهريج ṣahriig, ṣihriig /n pl *ṣahariig*/ cistern, large storage tank (particularly for water).

صهريجي ṣahriigi /n/ type of *mafrafiyya* design (see Pl.G, 1, 7).

ص ه ل

صهل ṣahal (a) /vi/ to neigh (of a horse). -vn *ṣahiil*; ava *ṣaahil*.

ص ه ل ل

صهلل ṣahlil **1** /vt/ to liven up with merriment and noise. *ṣahlilu l-leela* they brought the party to life. **2** /vi/ to indulge in noisy merriment. *ḥa-nṣahlil il-lelaa-di* we're going to have a hell of a time tonight. -vn *ṣahlala*; ava/pva *miṣahlil*.

صهليلة ṣuhleela /n pl *ṣahaliil*/ blaze.

اتصهلل ʔitṣahlil or ʔiṣṣahlil /vi/ to be livened up with merriment and noise. -vn *tiṣahliil*; ava *mitṣahlil*.

ص ه ي ن

صهين ṣahyin /vi/ to be unconcerned, pay no attention. *ṣahyin tifalɛaṣ [prov]* don't worry and you'll grow fat (i.e. be healthy). *ʔiz-zibuun il-mutɛib lamma yidfaɛ il-ḥisaab yiṣahyin ɛal-baɛfiif* a tiresome customer forgets the tip when he pays the bill. -vn *ṣahyana, ṣahyana*; ava *miṣahyin*.

ص ه ي و ن

صهيون ṣahyuun /prop n/ Zion.

صهيوني ṣahyuuni **1** /adj/ Zionist. ‖*raagil ṣahyuuni* a ruthless man. **2** /n pl *ṣahayna, ṣahayna*/ a Zionist.

الصهيونيّة ʔiṣ-ṣahyuniyya /n/ Zionism.

ص و ا ن

صوانة ṣawaana /n/ (star) marking on a horse's forehead.

ص و ب [1]

صاب ṣaab *(i)* /vt/ to hit, strike (a target or the like). *ʔin-naʃangi ṣaab il-hadaf* the marksman struck the target. *ɛeen wi-ṣabit-ni* someone gave me the evil eye. ‖*marra tṣiib wi-marra txiib [prov]* win a few, lose a few. -*kalaam-u ṣaayib* what he says is right. -vn *ṣayabaan*; ava *ṣaayib*.

صايب ṣaayib /n/ disaster, calamity. *ṣaab il-balad ṣaayib* disaster befell the town.

صواب ṣawaab /n/ rightness, correctness. *miʃ mumkin il-waaḥid yikuun ɛala ṣawaab ɛala ṭuul* you can't be right all the time.

أصوب ʔaṣwab [1] /el/ more/most right or correct. *ʔil-ʔaṣwab inn aɛabil-hum* it would be better if I met them.

اتصاب ʔitṣaab or ʔiṣṣaab /vi/ to be afflicted, be struck. *ʔilaah-i yitṣaab fi-naḍar-u* may he be struck blind! *ʔitṣaab fil-ḥadsa talatt infaar* three people were injured in the accident. -iva *mitṣaab*.

انصاب ʔinṣaab = ʔitṣaab. -iva *minṣaab*.

صوّب ṣawwib↑ /vt/ to aim. *ṣawwabit-lu naẓra* she eyed him intently. -vn *taṣwiib*; ava *miṣawwib*.

اتصوّب ʔitṣawwib or ʔiṣṣawwib /vi/ to be aimed. -iva *mitṣawwib*.

أصاب ʔaṣaab↑ = ṣaab. *ʔil-muʔmin muṣaab* the righteous always suffer. -vn *ʔiṣaaba*; ava *muṣiib*; pva *muṣaab*.

أصوب ʔaṣwab [2] /vi perf only/ to be right. *ʔinta ʔaṣwabt illi ma-ɛazamt[i]-hum-f[i] ɛal-faraḥ* you were right not to have invited them to the wedding.

إصابة ʔiṣaaba /n pl *-aat*/ injury.

مصيبة muṣiiba (also *niṣiiba*↓) /n pl *maṣaayib, naṣaayib*/ disaster, calamity. *ya mṣibt-i* woe is me! *ʔeeh il-muṣiiba lli-ḥna fiiha* what kind of trouble have we got into? *maṣaayib fi-zakaayib [prov]* ≈ it never rains but it pours. *maṣaayib naas ɛand[i] naas fawaayid [prov]* (some) people's misfortunes are benefits for (other) people. ‖*ʔil-muṣiiba ʔinn* unfortunately, as in *ʔil-muṣiiba ʔinnaha miʃ fahma ḥaaga* unfortunately she understands nothing. -*hiyya di l-muṣiiba* that's the sad

part of it. - *ɣat-ak muṣiiba* ≈ go to hell!
مصاب *muṣaab* /n */ casualty, victim (of an accident).
استصوب *ʔistaṣwab, ʔistaṣwib* /vt/ to consider right or correct. - vn *ʔistiṣwaab*; ava *mistaṣwab*.

ص و ب [2]
صوبة *ṣooba* <T *soba*> /n pl *-aat*/ shed in which young plants are cultivated. *ṣooba ɋzaaz* greenhouse.

ص و ت
صوت *ṣoot* /n pl *ʔaṣwaat*/ **1** voice. *ɣalli ṣoot-ak* speak up! **2** noise, sound. *ʔil-ʔawlaad yitsaḥḥabu min ɣeer ṣoot ɣala ṭaraṭiif ṣawabiɣ-hum* the children sneak out on tiptoe without a sound. **3** scream, cry. **4** vote.
صوتي *ṣawti* /adj/ **1** vocal. *ʔil-ʔaḥbaal iṣ-ṣawtiyya* the vocal chords. **2** pertaining to sound, audio-. *muʔassiraat ṣawtiyya* sound effects.
صيت *ṣiit* /n/ fame, renown. ‖ *ʔiṣ-ṣiit wala l-ɣina [prov]* having a reputation (for being rich) has more advantage than (actually) being rich.
صوات *ṣuwaat* /n/ screaming (in pain, fright, sorrow etc.). *ṣuwat-hum ɣili l-rabb is-sama* their anguished cries reached the skies.
صويت *ṣuwiit* /n/ screaming (in pain, fright, sorrow etc.). *ʔis-sitt[i] ɣirfit ɣaraḍ-u w-haat ya ṣuwiit* the woman understood his intentions and started yelling.
صيّيت *ṣayyiit* /n pl *ṣayyiita*/ Koran chanter, singer of religious songs.
صوّت *ṣawwat* /vi/ **1** to vote. *baɣd[i] ma yṣawwatu lagnit il-intixaab bi-tifriz il-ʔaṣwaat* after they vote, the election committee sorts the votes. **2** to scream or cry (in pain, fright or sorrow). *wara g-ganaaza niswaan bi-ṭṣawwat* following the funeral were women screaming in anguish. - vn *taṣwiit*; ava *miṣawwat*.
صيّت *ṣayyit* **1** /vt/ to sing the praises of, spread the (good) reputation of. *miʃ ɣarfa mṣayyitiin ṭabix-ha ɣala ʔeeh* I don't know why they are singing the praises of her cooking. **2** /vi/ to chant the Koran or religious songs. - vn *taṣyiit*; ava *miṣayyit*.
مصّيت *miṣṣayyat* /adj */ famous, renowned. *baɋa maɣɋuul ʔinnak ma-smiɣt[i]-ʃ ɣan (fulaan) il-miṣṣayyat illi-sm-u ɣala kull[i] lsaan* it is incredible that you've never heard about the famous ... whose name is on everybody's lips.

ص و د
صودا صودة، *ṣooda* <Engl> /n/ **1** soda. *ʔiṣ-ṣooda l-kawya* caustic soda. **2** *karbunaat iṣ-ṣooda* sodium bicarbonate, baking-powder. **3** soda-water.

ص و ر [1]
صورة *ṣuura* /n pl *ṣuwar*/ **1** picture, photograph. *ṣuwar zeet* oil paintings. ‖ *ʔiṣ-ṣuura walla l-kitaaba* heads or tails? (when tossing a coin). **2** face card, court card. **3** copy, duplicate. **4** manner, mode. *miʃ ɣayzaa-ki tihmili fuṷl-ik biṣ-ṣuura di* I don't want you to neglect your work like this.
صوري *ṣuuri* /adj/ pertaining to outward form, formal. *ʔigraʔaat ṣuriyya* measures taken only for the sake of appearances.
صوّر *ṣawwar* /vt/ **1** to portray, represent, make manifest. *ʔil-masraḥiyya bi-ṭṣawwar il-faqr[i] fil-ʔaryaaf* the play portrays poverty in the countryside. ‖ *huwwa ginn[i] mṣawwar* he's a real demon, he's the Devil personified. - *ḥ-aṣawwar ɋatiil in-nahar-da* I'm going to kill someone today! **2** to photograph, film. *ʔit-tilivizyoon ḥa-yṣawwar ɣamaliyyit il-ʔinqaaz* television will film the rescue operation. ‖ *taṣwiir il-mustanadaat* photocopying. **3** *[mus]* to transpose. *ṣawwar in-nayama di ɣala ḥarf[i] taani* transpose this tune into another key. - vn *taṣwiir*; ava/pva *miṣawwar*.
تصوير *taṣwiira* /n pl *taṣawiir*/ **1** *[magic]* effigy. **2** ↓ = *ṣuura*.
تصويري *taṣwiiri* /adj */ illustrative. *musiiqa taṣwiriyya* music accompanying the action in a film or play, background music.
مصوّر *muṣawwir*↑ /n */ **1** photographer. **2** cameraman (in motion pictures, television).
مصوّراتي *miṣawwaraati, muṣawwaraati* /n pl *-yya*/ photographer.
اتصوّر *ʔitṣawwar* or *ʔiṣṣawwar* /vi/ **1** to imagine. *ʔitṣawwar* (or *taṣawwar) baɋa* just imagine! *b-aḥibb-ik fooɋ ma titṣawwari* I love you more than you imagine. **2** to be photographed. ‖ *film[i] mitṣawwar* exposed film. - vn *taṣawwur*; ava/iva *mitṣawwar*.
تصوّر *taṣawwur*↑ /n pl *-aat*/ fantasy, flight of fancy. *ʔana ɣarfa di mugarrad taṣawwuraat ʔinnama xuft[i] bardu* I know they were mere fantasies but I was still afraid.

ص و ر [2]
الصور *ʔiṣ-ṣuur* /n/ *[Isl]* the trumpet on which it is believed two blasts will be blown at the end of the world - the first to destroy all living creatures, the second to resurrect them for judgement.

ص و ص و
صوصو *ṣawṣaw* /vi/ to cheep (of chicks). *ʔiwɣa tṣawṣaw* not a peep out of you! ‖ *(ɣaṣafiir) baṭn-i bi-ṭṣawṣaw* I'm very hungry. - vn *ṣawṣawa*; ava *miṣawṣaw*.

ص و ع

صاع *ṣaaʕ (u, i)* /vi/ to become a bum, become a down-and-out. *ʔif-ʃabaab ṣayʕiin fiʃ-ʃawaariʕ wi-biyʕaksu innaas* the young men loaf about in the streets and pester people. - vn *ṣayaʕaan, ṣiyaaʕa*; ava *ṣaayiʕ*.

صايع *ṣaayiʕ* /adj * and pl *ṣuyyaʕ, ṣuyyaaʕ, ṣiyyaʕ, ṣiyyaaʕ*/ good-for-nothing. *da walad ṣaayiʕ* he's a good-for-nothing kid.

صوّع *ṣawwaʕ* /vt/ to sour, embitter or ruin the life of (s.o.). *ʔil-maṣaayib il-mitkarrara ṣawwaʕit ʕiʃt-i* constant misfortune has ruined my life. *yaama ṣawwaʕ-ni z-zaman* what a hard life I've had! - vn *taṣwiiʕ*; ava/pva *miṣawwaʕ*. see further under م ص و ع

ص و غ see س ى غ and ص ى غ

ص و ف

صوف *ṣuuf* /n pl *ʔaṣwaaf*/ wool. ‖*ṣuuf ʕaskari* thick plain polished cotton for women's clothes. *-yiḫraʕ ṣuuf-ak* damn you!

صوفة *ṣuufa* /n pl *-aat*/ **1** piece of woollen cloth. **2** a wool, a type of wool. **3** device used by women for artificial insemination.

صوفى *ṣuufi* /adj */ Sufi, pertaining to Sufism. *ʔiṭ-ṭuruʕ iṣ-ṣufiyya* the Sufi orders.

صوّف *ṣawwif* /vi/ to become mouldy (particularly of bread). - vn *taṣwiif*; ava *miṣawwif*.

اتصوّف *ʔitṣawwif* or *ʔiṣṣawwif* /vi/ to become a Sufi. - vn *taṣawwuf*; ava *mitṣawwif*.

تصوّف *taṣawwuf* /n/ Sufism.

متصوّف *mitṣawwif* or *miṣṣawwif* /n */ Sufi.

ص و ل [1]

صول *ṣool*[1] /coll n/ dung of a donkey, mule or horse.

صولة *ṣoola* /unit n, pl *-aat*/ a piece of dung (of a donkey, mule or horse).

صلاية *ṣulaaya* = *ṣoola*.

صوّل *ṣawwil* /vi/ to defecate (of a donkey, mule or horse). - vn *taṣwiil*; ava *miṣawwil*.

[2] (ص و ل)

صول *ṣool*[2] <T *sol*> /n pl *-aat*/ *[obsol]* master-sergeant, sergeant-major.

صولة *ṣuula* <It *sagola*> *[naut]* /n/ signal halyard.

ص و م

صام *ṣaam (u)* **1** /vi/ to observe a ritual fast; abstain from food, drink, smoking and sexual relations from first light to sunset (for Muslims); abstain from all foods derived from animals, with the occasional exception of fish (for Copts). ‖*yiṣuum (yiṣuum) wi-yiftar ʕala baṣala [prov]* he fasts (for ages) and then breaks his fast on an onion (a comment on illogical behaviour, or an expression of sympathy at a disappointing outcome). *-samak ṣaayim* fish which has not eaten for some time before being caught and whose intestines are therefore clean. *-ʕaʃara ṣayma* game of cards or backgammon in which the losing player does not win a single point. **2** /vt/ to fast during (a certain period). *ma-ʔdir-ʃ*[i] *yṣuum ramaḍaan kull-u* he could not fast the whole month of Ramadan. - vn *ṣoom, ṣiyaam*; ava *ṣaayim*.

صوم *ṣoom* /n/ fast, abstention. *min hina l-ʔaaxir iʃ-ʃahr*[i] *ʔiʕmil ḫisaab-ak ʕala ṣ-ṣoom* from now on till the end of the month, tighten your belt. ‖ *ʔiṣ-ṣoom ik-kibiir [Chr]* Lent.

صومى *ṣoomi* /adj/ *[Chr]* without meat or the flesh of fish or poultry (of food).

صيام *ṣiyaam, ṣiyaam* /n/ fasting, abstention.

صيامى *ṣiyaami, ṣiyaami* /adj/ *[Chr]* not containing animal products, with the occasional exception of fish (of food prepared for consumption in a time of fast).

اتصام *ʔitṣaam* or *ʔiṣṣaam* /vi/ passive of *ṣaam*. - iva *miṭṣaam*.

صوّم *ṣawwim* /vt/ to make (s.o.) fast. *ʔil-ḫizn*[i] *ṣawwim-ha ʕan iz-zaad* sorrow made her lose the desire for food. - vn *taṣwiim*; ava *miṣawwim*.

اتصوّم *ʔitṣawwim* or *ʔiṣṣawwim* /vi/ to be made to fast. - iva *miṭṣawwim*.

ص م ع see ص و م ع

[1] ص و ن

صان *ṣaan (u)* /vt/ to look after, preserve, protect. *yiṣuun ʕarḍ il-ʕeela* he protects the honour of the family. *filuus-ak fil-ḫifẓ*[i] *wiṣ-ṣoon* your money is in safe keeping. *ʔiddi sirr-ak li-lli yṣuun-u [prov]* tell your secret (only) to him who will keep it. ‖ *ʔil-ʕarḍ il-maṣuun* or *ʔiʃ-ʃaraf il-maṣuun* or *ʔil-ḫaram il-maṣuun [obsol]* a formal term of reference to one's wife (now used jokingly). - vn *ṣiyaana, ṣiyaana, ṣoon*; ava *ṣaayin*, pva *maṣuun*.

صيانة *ṣiyaana, ṣiyaana* /n/ maintenance (of equipment etc.).

صوان *ṣiwaan, ṣuwaan* /n pl *ṣiwína, ṣawawiin*/ temporary pavilion of appliquéed or patterned cloth set up for funeral receptions and other large gatherings.

اتصان *ʔitṣaan* or *ʔiṣṣaan* /vi/ to be protected. - iva *miṭṣaan*.

انصان - *ʔinṣaan* = *ʔitṣaan*. - iva *minṣaan*.

ص و ن [2]
صوّان *ṣawwaan* (also *ḥagar ṣawwaan*) /coll n/ flint.
صوّانة *ṣawwaana* /unit n/ a flint, a piece of flint.
صوّاني *ṣawwaani* /adj/ pertaining to flint. *ḥagar ṣawwaani* flint.

ص و ن [3] see ص و ا ن : *ṣawaana*

ص و ى ا
الصويا *ʔiṣ-ṣooya* (also *fuul iṣ-ṣooya*) <prob Engl> /coll n/ soya beans.

ص ى ب see ص و ب : *ṣaab, ṣaayib, muṣiiba*

ص ى ت see ص و ت : *ṣiit, ṣayyiit, ṣayyit, miṣṣayyat*

ص ى ح
صاح *ṣaaḥ (i)* /vi/ to cry out, yell. *ʔid-diik il-faṣiiḥ fil-beeḍa yṣiiḥ [prov]* (the eloquent cock crows while still in the egg) ≈ talent shows itself early. *kitiir iṣ-ṣiyaaḥ ʔaliil iṣ-ṣuuf [prov]* ≈ empty vessels make the most sound. - vn *ṣiyaaḥ*; ava *ṣaayiḥ*.
صيّح *ṣayyaḥ* = *ṣaaḥ*. - vn *taṣyiiḥ*; ava *miṣayyaḥ*.

ص ى د
صاد *ṣaad* [2] *(i)* /vt/ **1** to catch (a prey). *tiigi tṣiid-u yṣiid-ak [prov]* ≈ biter bit. **2a** to hunt. **2b** to fish for (fish). - vn *ṣeed*; ava *ṣaayid*.
صيد *ṣeed* /n/ **1** hunting. *ṣeed iṣ-ṣaqr* falconry, hawking. **2** fishing. *markib ṣeed* trawler. *ʔiṣ-ṣeed biṣ-ṣinnaara* angling. *ʃabakit ṣeed* fishing net. ‖ *ʔiṣ-ṣeed fil-mayya l-ʕikra* fishing in troubled waters.
صيدة *ṣeeda* **1** /n pl *-aat*/ prey. **2** /adj invar/ worth having, desirable. *zibuun ṣeeda* a prize customer. *bint[i] ṣeeda* a girl who's a good catch, a good lay.
صيّاد *ṣayyaad, ṣayyaad* /n */ **1** hunter. **2** fisherman.
صيادية *ṣayyadiyya, ṣayadiyya* /n/ dish of fish baked with tomatoes and spices.
مصيدة *maṣyada, maṣyada* /n pl *maṣaayid*/ trap. *maṣyadit firaan* mousetrap.
اتصاد *ʔitṣaad* or *ʔiṣṣaad* /vi/ to be caught (of a prey). ‖ *ʔin ʃa-lla titṣaad fi-qalb-ak* (may you) drop dead! - iva *mitṣaad*.
انصاد *ʔinṣaad* = *ʔitṣaad*. - iva *minṣaad*.
اتصيّد *ʔitṣayyid* or *ʔiṣṣayyid* /vt/ to be on the look-out for. *bi-yuqʕud ʕal-qahwa wi-yitṣayyid il-ʔaxbaar* he sits in the café and picks up what news he can. - ava *mitṣayyid*.
اصطاد *ʔiṣṭaad* = *ṣaad* [2]. *ʔit-taragma bi-yiṣṭaadu z-zabaayin* the tourist guides hunt down the customers. *mamnuuʕ iṣ-ṣayyadiin yiṣṭaadu is-samak fil-manṭiqa di* fishermen are not allowed to fish in this area. ‖ *bi-yiṣṭaad fil-mayya l-ʕikra* he's fishing in troubled waters. - ava *miṣṭaad*.

ص ى د ل
صيدلة *ṣaydala* /n/ pharmacy. *kulliyyit iṣ-ṣaydala* the College of Pharmacy.
صيدلى *ṣaydali* /n pl *ṣayadla*/ pharmacist.
صيدليّة *ṣaydaliyya*↑ /n pl *-aat*/ pharmacy, chemist's shop.

ص ى ر [1]
صار *ṣaar (i)* /vi/ **1** /preverb/ to start to, begin to. *ṣaarit in-naas tibuṣṣi-lu bi-ḥtiraam* people began to regard him with respect. **2** to become. *baʕd[i] ma ṭabbeet ṣirt[a] ʕaliil* after I fell down I became ill. *ṣaar ʕandi keef* I became addicted.
مصير *maṣiir* /n pl *maṣaayir*/ end, lot, outcome. *maṣiir-u maʕruuf* his fate is well known.
مصير، مسير *misiir* /n/ eventual outcome. *misiir-ak tikuun ɣani yoom min il-ʔayyaam* you're bound to be rich one of these days. *misir-ha titʕaddil* it'll turn out all right in the end.
صيّر *ṣayyar* /vt/ to change (s.o. or s.th.) into. *ṭuuba tṣayyar ṣ-ṣabiyya karkuuba* (the month of) Tuba (is so cold that it) turns a young girl into a hag. - ava *miṣayyar*.
اتصيّر *ʔitṣayyar* or *ʔiṣṣayyar* /vi/ to be changed into. - iva *mitṣayyar*.

ص ى ر [2]
صير *ṣiir* <Copt> **1** /adj invar/ heavily salted. **2** /coll n/ small fish.
صيرة *ṣiira* /unit n, pl *-aat*/ a small fish. ‖ *ʕeen iṣ-ṣiira* a mineral spring near the mosque of the Imam Shafi'i said to posses curative powers.

ص ى ص
صيص *ṣiiṣ* /adj invar/ unripe, green (especially of dates).

ص ى ط
صاط *ṣaaṭ (i)* /vi/ to become watery (of food). *dimʕa ṣayṭa* thin gravy. - vn *ṣayaṭaan*; ava *ṣaayiṭ*.

ص ى ع see ص و ع : *ṣaaʕ, ṣaayiʕ*

ص ى غ see also س ى غ
صاغ *ṣaaɣ (i)* /vt/ to draft (a document etc.). - vn *ṣiyaaɣa*; ava *ṣaayiɣ*.

صيغة *ṣiiɣaʔ* /n pl *ṣiyaɣ*/ style, form. *ṣiivit it-taɛaaqud* wording of the contract.

اتصاغ *ʕitṣaaɣ* or *ʕiṣṣaaɣ* /vi/ to be drafted (of a document etc.). - iva *mitṣaaɣ*.

ص ى ف

صاف *ṣaaf (i)* /vi/ to become too ripe for use (of a crop). *ʕiz-zarɛa ṣaafit wi-hiyya ɛala ʕabuu-ha* the crop got too ripe while it was standing. - ava *ṣaayif*.

صيف *ṣeef* /n/ summer.

صيفى *ṣeefi* /adj */ of the summer. *maḥaṣiil ṣefiyya* summer crops.

صيفيّة *ṣefiyya* /n pl *-aat*/ a summer.

مصيف *maṣyaf* /n pl *maṣaayif*/ summer resort.

صيّف *ṣayyif* /vi/ to summer, aestivate. - vn *taṣyiif*; ava *miṣayyif*.

مصيّف *miṣayyif* /n */ aestivator.

ص ى م see ص و م : *ṣiyaam, ṣiyaam, ṣiyaami, ṣiyaami*

ص ى ن [1]

الصين *ʕiṣ-ṣiin* /prop n/ China. ‖ *ʕiṣ-ṣiin iʃ-ʃaɛbiyya* jocular form of reference to the populous Guiza quarter of *bulaaq id-dakruur*.

صينى *ṣiini*[1] **1** /adj */ Chinese. — /n/ **2** /pl */ a Chinese. **3** /no pl/ the Chinese language.

صينى *ṣiini*[2] **1** /adj invar/ made of bone china or porcelain. **2** /n/ bone china, porcelain. *ʕanḍaf min iṣ-ṣiini baɛd*[i] *ɣasiil-u [prov]* (cleaner than china after washing) completely cleaned out (of money).

ص ى ن [2] see ص ن ى : *ṣaniyya, ṣiniyya*

ص ى ن [3] see ص و ن [1] : *ṣiyaana*

ض

ض ا د
ضاد *ḍaad* /fem n, pl *-aat*/ fifteenth letter of the Arabic alphabet. ‖*luɣat iḍ-ḍaad* the Arabic language. - also *ḍah*.

ض ا م
ضامة *ḍaama* <It *dama*> **1** /n/ **1a** draughts, checkers. **1b** /pl *-aat*/ square (in a checkered design). *ɣumaaʃ ḍamaat* checkered cloth. **2** /adj invar/ check, checkered, plaid. *ʃil-ɣumaaʃ iḍ-ḍaama* checkered cloth.

ض ا ن
ضاني *ḍaani* (also *laḥm[i] ḍaani*) /n/ mutton, lamb.

ض ء ل
ضئيل *ḍaʃiil↑* /adj pl *ḍuʃaal*/ meagre. *kimmiyyaat ḍaʃiila* meagre quantities.
ضآلة *ḍaʃaala↑* /n/ meagreness.
اتضائل *ʃitḍaaʃil* or *ʃiḍḍaaʃil* /vi/ to grow smaller, dwindle. - vn *taḍaaʃul*; ava *mitḍaaʃil*.
استضأل *ʃistaḍʃal* /vt/ to consider meagre. - ava *mistaḍʃal*.

ض ب ب [1]
ضبّ *ḍabb[1] (u)* /vi/ to take a firm hold (of s.th.). *ḍabb[i] fi-xnaaɣ(-u)* to grab (s.o.) by the neck. - vn *ḍababaan, ḍabb*; ava *ḍaabib*; pva *maḍbuub*.
ضبّ *ḍabb[2]* /n pl *ḍubuub*/ pair of buck teeth.
ضبّة *ḍabba* /n pl *ḍubab*/ **1a** jaw. *ʈaɣm iḍ-ḍabba t-taḥtaniyya* a set of lower dentures. ‖*muftaaḥ bi-ḍabba* adjustable wrench. - *ḍabba fil-ʃarḍ[i] w-ḍabba fis-sama* (one jaw resting on the ground and the other raised as high up as the sky) ≈ very greedily, as in *gaay faatiḥ buɣɣ-u ḍabba fil-ʃarḍ[i] w-ḍabba fis-sama* he's coming expecting too much. **1b** denture. **2** wooden door lock (see Pl.C, 1). ‖*ḍabba w-muftaaḥ* three-cornered tear (in cloth).
اتضبّ *ʃitḍabb* or *ʃiḍḍabb* /vi/ to be taken hold of firmly. - iva *mitḍabb*.
انضبّ *ʃinḍabb* = *ʃitḍabb*. - iva *minḍabb*.
ضبّب *ḍabbab[1]* /vt/ to test (a water-melon) for ripeness by cutting out a rectangular segment. ‖*w-allaahi l-aḍabbab kirf-ak* by God I'll cut you open! - vn *taḍbiib*; ava/pva *miḍabbab*.
اتضبّب *ʃitḍabbab* or *ʃiḍḍabbab* /vi/ to be tested for ripeness by having a rectangular segment cut out (of a water-melon). - iva *mitḍabbab*.

ض ب ب [2]
ضباب *ḍabaab* /n/ fog, mist.
ضبابة *ḍabaaba* /unit n, pl *-aat*/ a patch of fog.
ضبّب *ḍabbab[2]* /vi/ to become foggy, become misty. ‖*muxx-i ḍabbab* my head became muzzy. - vn *taḍbiib*; ava *miḍabbab*.

ض ب ب و ر see د ب ب و ر

ض ب ب ي ش
ضبّيش *ḍubbeeʃ* /n pl *ḍubbeeʃa*/ one who spoils for a fight.

ض ب ح see د ب ح [2]: *ḍabaḥ, ḍabḥa, ʃitḍabaḥ, ʃinḍabaḥ*

ض ب ش [1]
ضبش *ḍabaʃ* /n/ weak-sightedness.
أضبش *ʃaḍbaʃ* /adj, fem *ḍabʃa*, pl *ḍubʃ*/ *[deris]* weak-sighted.
اتضبش *ʃitḍabaʃ* or *ʃiḍḍabaʃ* /vi/ to become weak-sighted. - ava *mitḍibiʃ*.

انضبش ʔinḍabaʃ = ʔiṭḍabaʃ. - ava *minḍibiʃ*.
ضبّش *ḍabbaʃ* /vi/ **1** to become weak-sighted. **2** to grope around blindly. - vn *taḍbiiʃ*; ava *miḍabbaʃ*.

ض ب ش [2] see ض ب ب ى ش: *ḍubbeeʃ*

ض بْ ط see ظ ب ط: *ḍabṭ, ḍaabiṭ, ʔinḍabaṭ, ʔinḍibaaṭ*

ض ب ع
ضبع *ḍabaɛ (u)* = *ḍabbaɛ*. - vn *ḍabɛ, ḍabaɛaan*; ava *ḍaabiɛ*.
ضبع *ḍabɛ* /n pl *ḍubúɛa, ḍibaaɛ, ḍubuuɛa*/ hyena. ‖*sabɛ[i] walla ḍabɛ* (lion or hyena) was it a success or a failure?
ضبعة *ḍabɛa* /n pl *-aat*/ jig fixture.
ضبّع *ḍabbaɛ* /vi/ to go to voracious excess. *ʔinta ḍabbaɛt[i] fil-ʔakl[i] kida leeh* why have you finished off so much of the food? *tuggaar is-suuq is-sooda ḍabbaɛu fin-naas* the black market dealers had the public at their mercy. - vn *taḍbiiɛ*; ava *miḍabbaɛ*.
اتضبّع *ʔiṭḍabbaɛ* or *ʔiḍḍabbaɛ* = *ḍabbaɛ*. - ava *miṭḍabbaɛ*.

ض ب ع ن
ضبعن *ḍabɛan* /vi/ to go to voracious excess. - vn *ḍabɛana*; ava *miḍabɛan*.
اتضبعن *ʔiṭḍabɛan* or *ʔiḍḍabɛan* = *ḍabɛan*. - ava *miṭḍabɛan*.

ض ج ج
ضجّ *ḍagg (i)* /vi/ to raise a hue and cry. *ʔif-faariɛ kull-u ḍagg[i] min ɛamayl-u* all the neighbourhood is up in arms over his behaviour. - vn *ḍagagaan*; ava *ḍaagig*.
ضجّة *ḍagga* /n/ uproar, tumult.
ضجيج *ḍagiig* = *ḍagga*.

ض ج ر
اتضجّر *ʔiṭḍaggar* or *ʔiḍḍaggar* /vi/ to grumble, complain. - ava *miṭḍaggar*.

ض ج ع
ضجعان *ḍagɛaan* /adj */ reclining, recumbent. *ḍagɛaan ɛala l-kanaba* reclining on the sofa.
اضطجع *ʔiḍṭagaɛ↑* or *ʔiḍḍagaɛ↑* /vi/ to lie down, recline. - ava *miḍṭigiɛ*.

ض ح ض ح
ضحضح *ḍaḥḍaḥ* /vt/ to break the bones of, beat up. *ɋumt[i] min in-noom miḍaḥḍaḥ* I woke up (feeling) smashed. - vn *ḍaḥḍaḥa*; ava/pva *miḍaḥḍaḥ*.
اتضحضح *ʔiṭḍaḥḍaḥ* or *ʔiḍḍaḥḍaḥ* /vi/ to be beaten up. - iva *miṭḍaḥḍaḥ*.

ض ح ك see د ح ك

ض ح و
ضحى *ḍuḥa, ḍaḥa* /n/ forenoon.
ضاحية *ḍaḥya* /n pl *ḍawaaḥi*/ suburb.
ضحويّة *ḍaḥwiyya, ḍaḥawiyya* /n pl *-aat, ḍaḥaawi*/ **1** forenoon, time around ten o'clock in the morning. **2** *[rur]* meal held on the morning of a feast day.
ضحّى *ḍaḥḥa[1]* /vt/ *[rur]* to delay till the late morning. - vn *taḍḥiyya*; ava *miḍaḥḥi*.
اتضحّى *ʔiṭḍaḥḥa[1]* or *ʔiḍḍaḥḥa[1]* /vi/ *[rur]* to delay till late morning. *ʔinta tḍaḥḥeet xaaliṣ ɛala ma ṣḥiit* it was nearly noon by the time you woke up. - ava *miṭḍaḥḥi*.

ض ح ى [1]
ضحيّة *ḍaḥiyya* /n pl *ḍaḥaaya*/ **1** sacrifice, sacrificial offering. *ɛiid iḍ-ḍaḥiyya [Isl]* the Feast of the Sacrifice, Greater Bairam. **2** victim.
أضحى *ʔaḍḥa: ɛiid il-ʔaḍḥa [Isl]* the Feast of the Sacrifice, Greater Bairam.
ضحّى *ḍaḥḥa[2]* /vi/ to make a sacrifice. *ʔana mustaɛidd[i] ʔaḍaḥḥi b-ḥayaat-i ɛalaʃanha* I'm ready to lay down my life for her. - vn *taḍḥiyya, taḍḥiya*; ava *miḍaḥḥi*.
تضحية *taḍḥiyya, taḍḥiya↑* /n pl *-aat*/ sacrifice. *taḍḥiyyaat iqtiṣadiyya* economic sacrifices.
اتضحّى *ʔiṭḍaḥḥa[2]* or *ʔiḍḍaḥḥa[2]* /vi/ to be sacrificed. - iva *miṭḍaḥḥi*.

ض ح ى [2] see ض ح و: *ḍuḥa, ḍaḥa, ḍaḥya, ḍaḥḥa[1], ʔiṭḍaḥḥa[1]*

ض خ خ
ضخ *ḍaxx↑ (u)* /vt/ to pump. *ʔiṭ-ṭurumba ma-bi-ṭḍuxx[i]-ʃ mayya kfaaya* the pump doesn't pump enough water. - vn *ḍaxx*; ava *ḍaaxix*; pva *maḍxuux*.
مضخّة *miḍaxxa↑* /n pl *-aat*/ pump. *miḍaxxit ḥariiq* fire-extinguisher.
اتضخّ *ʔiṭḍaxx* or *ʔiḍḍaxx* /vi/ to be pumped. - iva *miṭḍaxx*.
انضخّ *ʔinḍaxx* = *ʔiṭḍaxx*. - iva *minḍaxx*.

ض خ م
ضخم *ḍaxm* /adj pl *ḍuxaam, ḍixaam*/ enormous, huge. *ɛadad ḍaxm* a huge number.
أضخم *ʔaḍxam* /el/ more/most enormous, huger/hugest.
ضخّم *ḍaxxam* /vt/ to cause to become huge.

ma-tqaxxam-ʃ il-masʕala biʃ-ʃakl[i] da don't exaggerate the matter like that! - vn *taqxiim*; ava/pva *miqaxxam*.

اتضخّم *ʔitqaxxam* or *ʔiqqaxxam* /vi/ to become huge. - vn *taqaxxum*; ava *mitqaxxam*.

تضخّم *taqaxxum*↑ /n/ **1** *[finan]* inflation. **2** *[path]* distension.

استضخم *ʔistaqxam* /vt/ **1** to consider (too) huge. **2** to select for hugeness. - vn *ʔistiqxaam*; ava/pva *mistaqxam*.

ض د د

ضدّ *ḍidd* **1** /prep/ against. *ʔit-taʔmiin ḍidd il-maraḍ* insurance against illness. *ḍidd il-ḥariiq* fire-proof. *ʃana miʃ ḍidd[i] ṭard-u* I've got nothing against firing him. **2** /n/ opposite. *ʔilli yziid ɛan ḥadd-u yinqilib li-ḍidd-u [prov]* everything that goes to excess has the reverse of the desired effect.

ضدّيّات *ḍiddiyyaat* /pl n/ feud.

ضادّ *ḍadd* /vt/ to oppose, be hostile to. - vn *miḍadiyya*; ava *miḍadd, muḍaadd*↑.

مضادّ *muḍaadd*↑ /adj/ anti-, counter-. *huguum muḍaadd* counter-attack. *madfaɛiyya muḍaadda liṭ-ṭayyaraat* anti-aircraft artillery. *muḍaddaat ḥayawiyya* anti-biotics.

اتضادّ *ʔitḍadd* or *ʔiḍḍadd* /vi/ to be opposed. - iva *mitḍadd*.

ض ر ب

ضرب *ḍarab (a)* /vt/ **1** to hit, strike, beat. *ḍarabt-a-ha ɛalqa* I gave her a hiding. *ḍarab ik-koora b-rigl-u* he kicked the ball. *ʔiḍrab-u bil-maṭwa* knife him! ‖ *ḍarab il-gamuusa ɛeen* he put the evil eye on the buffalo. - *ḍarab-ni maqlab* he played a dirty trick on me. - *ḍarab id-dinya ṣarma* he let the world go hang. - *ḍarab il-wadaɛ* (or *ir-raml*) to divine by shells (or by sand). - *ḍarab quʃaaṭ* to take a piece (in a game). - *ḍarab bulṭa* to take a stroll. - *ḍarab ṭuub* to make bricks. - *ḍarab ɛumla* to mint coin. - *yiḍrab wi-ylaaqi* he's good at thrust and parry. - *ḍarab ṣuḥubiyya* to strike up a friendship. - *ḍarab ... wiff* to give ... a coat of paint. - *ḍarab(-u) ɛala ɛeen(-u)* to knock (s.o. or s.th.) out of the running, beat (s.o. or s.th.) hollow. - *ḍarab masal* to give an example. **2** to let loose, let off, fire off. *ḍarab ṭalqa* he fired a shot. *ḍarabu naar fil-hawa* they fired into the air. *ḍarab id-dinya ṭabanga* he let the world go hang. *ḍarab ẓarṭa* he let off a fart. *ḍarab-li tilifoon* he phoned me. *ḍarab ik-kilaks* he sounded the horn. *ḍarab noobit iṣ-ṣaḥayaan* he sounded reveille. *ḍarab in-nuur ik-kibiir* he flashed his headlights. *ḍarab-li salaam* he saluted me. *ḍarabu ḥalaqiyya ḥawaleen il-beet* they threw a cordon around the house. *ḍarabt[a] ɛeen-i ʃmaal wi-ymiin* I cast glances to left and right. ‖ *ḍarab tafliisa* to go bankrupt. - *ḍarab ɛafara* (or *waaḥid wi-talatiin*) *[coarse]* to masturbate, toss off. **3** to produce, give off. *gism-u ḍarab ʔaḥmar* his body flushed. *ʔiʃ-ʃatla ḍarabit gudur-ha* the seedling took root. **4** to play (a musical instrument). *bi-yiḍrab il-kamanga* he plays the violin. **5** to push in, insert. *ḍarab is-silk[i] fil-masuura* he inserted the wire into the pipe. *ḍarab il-filuus fi-geeb-u* he pocketed the money. **6** to multiply. *ʔiḍrab ʔitneen fi-tneen* multiply two by two. **7** to stake (money, at cards). *ḥ-aḍrab xamsa saay* I'll stake five piastres. **8** to churn, beat, mix. *laban ḍarb* buttermilk. *ʔiḍrab il-beeḍ fi-baɛḍ-u* beat the eggs together! ‖ *ʔil-wiski maḍruub* the whisky is adulterated. **9** to hull (rice). — /vi/ **10** to beat, make a beating. *ḍalb-i b-yiḍrab* my heart is beating. *ʔid-diik bi-yiḍrab b-ginaaḥ-u* the rooster beats his wings. ‖ *ḍarabt[i] fid-durg* I rummaged in the drawer. - *ʔid-dinya b-tiḍrab wi-tiqlib* everything's topsy-turvy. **11** to go off, fire. *ʔil-madfaɛ ḍarab* the cannon went off. *ʔig-garas ḍarab* the bell rang. *fardit kawitʃ[i] ḍarabit* one tyre burst. *damm-u ḍarab* (1) he had a (brain) haemorrhage. (2) he burst a blood vessel (with anger). **12** to take effect, have pronounced effect. *ʔil-ʔazma ḍarabit* the crisis struck. *ḥaẓẓ-u ḍarab* his luck came up. *ʔakiid il-ʔisṭuwaana ḥa-tiḍrab* the record will definitely be a hit. **13** to go bad, spoil (of food). *ʔil-mangaaya ḍarabit fiʃ-ʃams* the mango went bad in the sun. **14** to copulate (of a male). *ʔit-toor ɛaagiz ɛan iḍ-ḍarb* the bull is incapable of mating. - vn *ḍarb*; ava *ḍaarib, ḍarbaan*; pva *maḍruub*.

ضربة *ḍarba* /n pl *-aat, ḍarabaat*/ **1** /inst n/ a stroke, a blow. *ḍarabaat il-ḍalb* heartbeats. *ḍarbit ʃams* sunstroke. *ḍarbit marma* goal kick. ‖ *ḍarbit miɛallim* master-stroke. - *ḍarba f-ḍalb-ak* ≈ drop dead! **2** *[mus]* beat. **3** *[naut]* grommet.

مضروب *maḍruub* /adj * and pl *maḍariib*/ wretched, rotten. *yiḍṭaɛ-ak ya maḍruub* blast you, you scoundrel!

ضريبة *ḍariiba* /n pl *ḍaraayib*/ **1** tax. *maṣlaḥit iḍ-ḍaraayib* Internal Revenue Agency. **2** quantity of seven ardebs (used in measuring rice only).

ضريبي *ḍariibi*↑ /adj */ pertaining to taxation.

ضرّاب *ḍarraab* /n pl *ḍarariib*/ large marble used for shooting at smaller ones in the game of *turungeela* (q.v.).

ضرّابة *ḍarraaba* /n/ **1** /pl *-aat*/ **1a** instrument (usually a rolled handkerchief) used in administering the prescribed strokes in children's games (e.g., the game of *ṭaab* (q.v.)). **1b** the person holding the *ḍarraaba* in children's games. **2** (also *ḍarraabit il-wadaɛ*) /pl

ḍarrabiin/ woman who divines by shells.
ضرّابيّة *ḍarrabiyya* /n pl *-aat*/ light quilted coverlet.
ضرّيب *ḍarriib* /n pl *ḍarriiba*/ skilful person (in, e.g., sports).
مضرب *maḍrab* /n pl *maḍaarib*/ **1a** bat. **1b** racquet. **1c** egg-whisk. **1d** fly-swatter. **2** rice-hulling plant.
انضرب *ʔinḍarab* /vi/ passive of *ḍarab*. ‖*ya rabb anḍirib fi-lsaan-i (ʔin kunt[i] b-akdib)* Lord, may my tongue be cut off if I am lying. - iva *minḍirib*.
اتضرب *ʔitḍarab* or *ʔiḍḍarab* = *ʔinḍarab*. - iva *mitḍirib*.
ضرّب *ḍarrab* /vt/ **1** to mix together, blend. *niḥuṭṭ il-ʔasmant[i] fooq ir-raml[i] wi-nḍarrab-hum ɛan-naafif* we put the cement on top of the sand and blend them together while dry. **2** to tease (cotton). **3** to quilt. **4a** to calculate. *xud il-ḥisba di ḍarrab-haa-li* do this sum for me. **4b** to consider, weigh (a problem). *ḍarrabt il-ḥikaaya f-muxx-i laɛeet-u huwwa lli ḥa-yixsar* I thought over the matter carefully and found that he would be the one to lose. - vn *taḍriib*; ava/pva *miḍarrab*.
اتضرّب *ʔitḍarrab* or *ʔiḍḍarrab* /vi/ pasive of *ḍarrab*. - iva *mitḍarrab*.
ضارب *ḍaarib* **1** /vt/ to compete with. *ʔiṭ-ṭaɛmagi bi-yḍaarib il-ṭurʃagi* the vendor of *ṭaɛmiyya* vies with the pickle-seller. **2** /vi/ to speculate. *ḍaarib fil-burṣa ḍayyaɛ filuus-u* he lost his money speculating in the stock exchange. - vn *miḍarba*; ava *miḍaarib*.
اتضارب *ʔitḍaarib* or *ʔiḍḍaarib* /vi/ **1** passive of *ḍaarib*. **2** to beat one another. *ʔil-ɛiyaal bi-titḍaarib (maɛa baɛḍ)* the kids are beating one another. - ava/iva *mitḍaarib*.
أضرب *ʔaḍrab* /vi/ to go on strike. - vn *ʔiḍraab*; ava *miḍrib, muḍrib*.
إضراب *ʔiḍraab* /n pl *-aat*/ **1** strike. *ɛamalna ʔiḍraab* we held a strike. **2** key lever of a piano.
اضطرب *ʔiḍṭarab*↑ or *ʔiṭṭarab*[1] /vi/ to become confused, become agitated, become turbulent. *miɛḍit-i ḍṭarabit* my stomach became upset. - vn *ʔitḍṭiraab*; ava *miḍṭirib, muḍṭarib*.

ض ر ح
ضريح *ḍariiḥ* /n pl *ʔaḍriḥa*/ tomb, sepulchral monument.

ض ر ر[1]
ضرّ *ḍarr (u)* /vt/ to damage, harm, injure. *ʔin-nuur il-ʔaḥmar ma-bi-yḍurr[i]-ʃ il-film* red light does not damage the film. ‖*ma-yḍurr[i]-ʃ* that's fine! - vn *ḍarar*; ava *ḍaarir*; pva *maḍruur*.
ضرر *ḍarar* /n pl *ʔaḍraar*/ harm, damage.
ضارّ *ḍaarr* /adj */ harmful.
ضرّة *ḍurra* /n pl *ḍaraayir*/ co-wife in a polygamous marriage.
أضرّ *ʔaḍarr*[1] /el/ more/most harmful.
ضرير *ḍariir* /adj/ blind.
اتضرّ *ʔitḍarr* or *ʔiḍḍarr* /vi/ to be damaged, be harmed, be injured. - iva *mitḍarr*.
انضرّ *ʔinḍarr* = *ʔitḍarr*. - iva *minḍarr*.
اتضرّر *ʔitḍarrar* or *ʔiḍḍarrar* /vi/ to complain of harm done to one. *leeh ma tiḍḍarrar-ʃ[i] min qaraar if-ʃirka* why don't you complain about the company's decision. - vn *taḍarrur*; ava *mitḍarrar, mutaḍarrir*↑.
أضرّ *ʔaḍarr*[2] = *ḍarr*. - vn *ʔiḍraar*; ava *muḍirr*.
مضرّ *muḍirr* /adj */ harmful.

ض ر ر[2]
ضرورة *ḍaruura*↑ /n pl *-aat*/ need, necessity. *biḍ-ḍaruura* of necessity. *ʔiḍ-ḍaruura laha ʔaḥkaam [prov]* necessity has its own laws. ‖*yiqḍi ḍaruura* to go to the lavatory.
ضرورى *ḍaruuri* /adj */ necessary. - /adverbially/ *ḍaruuri ḥa-ywaafiq ɛala l-kalaam da* he'll definitely agree to this.
اضطرّ *ʔiḍṭarr* or *ʔiṭṭarr* /vi/ to be compelled. *ʔiḍṭarrit il-maḥallaat di ʔinnaha txaffaḍ ʔasɛar-ha* these stores were forced to lower their prices. - vn *ʔiḍṭiraar*; ava *miḍṭarr, muḍṭarr*.
اضطرارى *ʔiḍṭiraari* or *ʔiṭṭiraari* /adj/ compulsory, forced. *hubuuṭ iḍṭiraari* forced landing. *ḥalaat iḍṭirariyya* emergency cases, emergencies.

ض ر ر[3]
ضرّة *ḍarra* /n pl *-aat*/ udder.

ض ر س
ضرس *ḍirs* (also *dirs*) /n pl *ḍuruus, ʔaḍraas*/ **1** molar. *ḍirs il-ɛaql* wisdom tooth. ‖*bi-xalɛ* (or *bi-ɋalɛ*) *iḍ-ḍirs* with very great difficulty. - *ʔilli yaakul ɛala ḍirs-u yinfaɛ nafs-u [prov]* self-reliance brings benefit (used as a familiar exhortation to eat). - *min taḥt iḍ-ḍirs* grudgingly. - *huwwa waxid-ha taḥt[i] ḍirs-u* ≈ he has her under his thumb. **2** piece of cooking salt. ‖*ʔil-malḥ[i] btaaɛ il-ʔakl[a] ɛaali ḍirs* the food is a bit on the salty side. **3** cog (of a water-wheel, see Pl.E, 9).
ضرّس *ḍarras* **1** /vt/ to set (s.o.'s) teeth on edge. – /vi/ **2a** to be set on edge (of the teeth). **2b** to have one's teeth set on edge. **3** (also *tarras*) to be thrown out of gear (of cog-wheels). - vn *taḍriis*; ava *miḍarras*.
تضاريس *taḍariis* /pl n/ *[geog]* **1** topography. **2** undulation. *taḍariis il-ʔarḍ* the undulations of the land.

ض ر ط
ضرطة *ḍarṭa* /n pl *-aat, ḍuraṭ*/ a fart. - also *ẓarṭa*.
ضرّط *ḍarraṭ* /vi/ to fart. *tiḍarraṭ fi-baḥri yismaɛuu-k fi-ɣibli* (when you fart in Lower Egypt they hear you in Upper Egypt) ≈ why don't you just shut up (in dismissing a worthless remark). - also *ẓarraṭ*. - ava *miḍarraṭ*.
اتضرّط *ʔitḍarraṭ* or *ʔiḍḍarraṭ* /vi/ (impersonal) passive of *ḍarraṭ*. *baɣa ʔana min illi yiḍḍarraṭ liihum [coarse]* ≈ am I the type to be farted about with? - also *ʔitẓarraṭ*. - vn *taḍriiṭ*; iva *mitḍarraṭ*.

ض ر ع [1]
ضرع *ḍarɛ* /n pl *ḍuruuɛ*/ teat (of an udder).

ض ر ع [2]
ضارع *ḍaaraɛ* /vt/ to be similar to, resemble. - vn *muḍarɛa*; ava *muḍaariɛ*.
مضارع *muḍaariɛ* /n/ *[gram]* imperfect tense.
اتضارع *ʔitḍaaraɛ* or *ʔiḍḍaaraɛ* /vi/ passive of *ḍaaraɛ*. - iva *mitḍaariɛ*.

ض ر ف see د ر ف

ض ع ض ع
ضعضع *ḍaɛḍaɛ* /vt/ to weaken. *ʔil-maraḍ ḍaɛḍaɛ-u* illness weakened him. - vn *ḍaɛḍaɛa*; ava/pva *miḍaɛḍaɛ*.
اتضعضع *ʔitḍaɛḍaɛ* or *ʔiḍḍaɛḍaɛ* /vi/ to be or become weakened. *ʔitḍaɛḍaɛt[i] min ig-guuɛ* I became weak from hunger. - ava/iva *mitḍaɛḍaɛ*.

ض ع ف [1]
ضعف *ḍiɛif, ḍuɛuf (a)* /vi/ to become weak, become feeble. - vn *ḍaɛf, ḍuɛf[↓]*; ava *ḍaɛfaan*.
ضعف *ḍaɛaf (i)* /vt/ to weaken. *xilfit il-ɛiyaal ḍaɛafit-ni* giving birth to children wore me out. - vn *ḍaɛafaan*; ava *ḍaaɛif*; pva *maḍɛuuf*.
ضعف *ḍaɛf* /n/ weakness.
ضعفان *ḍaɛfaan* /adj */ ailing, sickly.
ضعيف *ḍaɛiif* /adj pl *ḍuɛaaf, ḍuɛafa*/ weak, feeble. *ḍaɛiif giddan* Very Poor (university grade). *yiigi ɛaḍ-ḍaɛiif lamma yistaɛgib il-ɣawi [prov]* He punishes the weak that the strong may pay heed. *ʔis-silaaḥ fi-yadd iḍ-ḍaɛiif veer is-silaaḥ fi-yadd il-ɣawi [prov]* a weapon in the hands of a weak man is not the same as it would be in the hands of a strong man.
أضعف *ʔaḍɛaf[1]* /el/ more/most weak or feeble. ‖ *ʔaḍɛaf il-ʔimaan* the least required or expected, as in *ʔaḍɛaf il-ʔimaan ʔinnak tikallim-u fit-tilifoon* the least you can do is phone him.
أضعف *ʔaḍɛaf[2]* /vt/ to weaken. - vn *ʔiḍɛaaf*; ava *miḍɛif, muḍɛif*.
استضعف *ʔistaḍɛaf* /vt/. **1** to consider (too) weak. **2** to select for weakness. - vn *ʔistiḍɛaaf*; ava *mistaḍɛaf*; pva *mustaḍɛaf*.

ض ع ف [2]
ضعف *ḍiɛf* /n pl *ʔaḍɛaaf*/ **1** double, twice as much. *ḍiɛf it-takaliif* double the cost. **2** *ʔaḍɛaaf* /pl n/ ... times as much. *talat ʔaḍɛaaf* three times as much.
ضاعف *ḍaaɛif* /vt/ **1** to double. **2** to multiply, increase. - vn *taḍaaɛuf*; ava *muḍaaɛif*.
مضاعف *muḍaaɛaf* /adj/ compound. *kasr[i] muḍaaɛaf* compound fracture. *fayda muḍaɛfa* compound interest.
مضاعفات *muḍaɛfaat* /pl n/ repercussions, side-effects. *qaraar luu muḍaɛfaat* a decision having repercussions. *muḍaɛfaat id-dawa* the side-effects of the medicine.
اتضاعف *ʔitḍaaɛif* or *ʔiḍḍaaɛif* /vi/ **1** to double or be doubled. **2** to multiply or be multiplied, increase or be increased. *ɛadad is-sukkaan iḍḍaaɛif kitiir* the population has multiplied many times over. - ava/iva *mitḍaaɛif*.

ض غ ط
ضغط *ḍaɣaṭ (a)* **1** /vt/ to press, compress. *ʔil-ɣaaz lamma b-niḍɣaṭ-u bi-yibrad* gas cools when we compress it. **2** /vi/ to exert pressure. *bi-yiḍɣaṭ bi-ʔibhaam-u* he presses with his thumb. *ḍaɣaṭna ɛalee ɛalaʃaan yidxul il-imtiḥaan* we put pressure on him to take the exam. ‖ *rubaaṭ ḍaaɣiṭ* tourniquet. - vn *ḍaɣṭ, ḍaɣaṭaan*; ava *ḍaaɣiṭ*; pva *maɣḍuuṭ*.
ضغط *ḍaɣṭ* /n pl *ḍuɣuuṭ*/ pressure. *ḍaɣṭ il-hawa* air pressure. *ḍaɣṭ id-damm* blood pressure. *ḍuɣuuṭ siyasiyya* political pressures. ‖ *ɣaṭr iḍ-ḍaɣṭ* relief train. *- tamrinaat ḍaɣṭ* press-ups. *- ɛandu ḍ-ḍaɣṭ* he has high blood pressure. *- ʔiḍ-ḍaɣṭ[a] ɛalee* he is under pressure, as in *ʔiḍ-ḍaɣṭ[a] ɛalee ʔinnu yiigi* he is under pressure to come.
ضغطة *ḍaɣṭa* /inst n, pl *-aat*/ (a single) exertion of pressure.
اتضغط *ʔitḍaɣaṭ* or *ʔiḍḍaɣaṭ* /vi/ **1** to be pressed, be compressed. **2** (impersonal) passive of *ḍaɣaṭ* 2. *ʔig-garḥ[i] miʃ laazim yitḍiɣiṭ ɛalee* pressure should not be put on the wound. - iva *mitḍiɣiṭ*.
انضغط *ʔinḍaɣaṭ* = *ʔitḍaɣaṭ*. - iva *minḍiɣiṭ*.

ض غ ن
ضغن *ḍaɣan[↑] (a)* /vi/ to harbour ill feelings. - vn *ḍiɣn*; ava *ḍaaɣin*.

ضغينة *ḍaɣiina↑* /n pl *ḍaɣaayin, ḍaɣaaʕin*/ hatred, rancour.

ض ف د ع

ضفدع *ḍufdaɛ* /coll n/ frog(s).

¶ *ḍufdaɛ bafari* /pl *ḍafaadiɛ bafariyya*/ frogman.

ضفدعة *ḍufdaɛa* /n pl *ḍafaadiɛ*/ **1** /unit n/ a frog. **2** wooden block on which the *ɛaqraba* of a plough rests (see Pl.D, 16).

ض ف ر [1]

ضفر *ḍafar (u)* /vt/ to braid, plait. *faɛr[i] maḍfuur* plaited hair. - vn *ḍafr, ḍafaraan*; ava *ḍaafir*; pva *maḍfuur*.

ضفيرة *ḍifiira* /n pl *ḍafaayir*/ **1** braid or plait of hair. **2** collection of wires or leads (such as those leading from a car's distributor), wiring arrangement.

ضفّر *ḍaffar[1]* /vt/ **1** to braid, intertwine. ‖ *kaḫk[i] mḍaffar* a kind of braided cake. **2** to splice. - vn *taḍfiir*; ava/pva *miḍaffar*.

اتضفّر *ʔitḍaffar[1]* or *ʔiḍḍaffar[1]* /vi/ **1** to be braided, be intertwined. **2** to be spliced. - iva *mitḍaffar*.

ض ف ر [2]

ظفر، ضفر *ḍufr, ḍifr* /n pl *ḍawaafir*/ **1** finger-nail, toe-nail. *ʔis-sagaayir bi-tṣaffar is-sinaan wiḍ-ḍawaafir* cigarettes yellow the teeth and the nails. ‖ *ḍufr-u b-raqabit-ha* ≈ he's worth ten of her. - *da yitmanna ḍufr[i] min ḍawafir-ha* (1) he obeys her slightest whim. (2) he would very much like to marry her. - *ʔiḍ-ḍufr[i] ma-yiṭlaɛ-f[i] min il-laḥm [prov]* (the nail does not part from the flesh) one always sticks to one's own. **2** claw-shaped motif in tent appliqée work (see Pl.H, 7).

ظفرة، ضفرة *ḍafra* /n pl *-aat*/ gouge.

ظفّر، ضفّر *ḍaffar[2]* /vt/ to mark (a pack of cards). - vn *taḍfiir*; ava/pva *miḍaffar*.

اتضفّر *ʔitḍaffar[2]* or *ʔiḍḍaffar[2]* /vi/ to be marked (of a pack of cards). - iva *mitḍaffar*.

(ض ف ف)

ضفّة *ḍaffa[1]* /n pl *ḍifaaf*/ bank (of a river etc.).

ضفّة *ḍaffa[2]* /n pl *-aat, ḍufaf*/ group (usually as part of a procession). *faatu ɛaleena ḍaffa wara ḍaffa* they passed by us group after group. - also *ṭaffa*.

ضفّة *ḍaffa[3]* /n/ double number (e.g., in dice or dominoes). - also *ṭaffa*.

ض ل ع

ضلع *ḍalaɛ (i)* /vt/ to undermine (particularly financially). *baqa gneeh yiḍliɛ-ak* do you want us to believe that one pound can ruin you? - vn *ḍalaɛaan*; ava *ḍaaliɛ*; pva *maḍluuɛ*.

ضلع *ḍilɛ* /n pl *ḍuluuɛ, ʔaḍlaaɛ, ḍulúɛa*/ **1** rib. ‖ *lu ḍilɛ[i] fil-mawḍuuɛ* he's involved in the matter. *ʔiksar lil-ɛayyil ḍilɛ[i] yiṭlaɛ-lu tneen [prov]* (break a child's rib and two will appear) ≈ spare the rod and spoil the child. **2** small sickle. **3** side (of a triangle, polygon etc.).

ضليع *ḍaliiɛ* /adj/ expert, well-informed. *ḍaliiɛ fil-iqtiṣaad* an expert in economics.

اتضلع *ʔitḍalaɛ* or *ʔiḍḍalaɛ* /vi/ to be undermined. - iva *mitḍiliɛ*.

انضلع *ʔinḍalaɛ* = *ʔitḍalaɛ*. - iva *minḍiliɛ*.

ضلّع *ḍallaɛ* /vt/ to corrugate. ‖ *qaṭiifa mḍallaɛa* corduroy. - vn *taḍliiɛ*; ava/pva *miḍallaɛ*.

اتضلّع *ʔitḍallaɛ* or *ʔiḍḍallaɛ* /vi/ **1** to be or become corrugated. **2** to gain great knowledge, become well-informed. - ava/iva *mitḍallaɛ*.

ض ل ف

ضلفة *ḍalfa* /n pl *-aat, ḍulaf*/ leaf (of a door, window etc.). - also *darfa*.

ض ل ل [1]

ضلّ *ḍall (i)* **1** /vt/ to lose (one's way). *ḍalleet ṭariiq-i fiḍ-ḍalma* I lost my way in the dark. **2** /vi/ to sin, err. - vn *ḍalaal*; ava *ḍaalil, ḍaall*.

ضلال *ḍalaal* /n/ misguidedness.

ضلالي *ḍalaali* /n pl *-yya*/ cheat.

أضلّ *ʔaḍall* /el/ more/most erroneous, falser/falsest. *ʔasxam wi-ʔaḍall[i] sabiil [prov]* far worse, as in *huwwa kaddaab wi-ʔaxuu ʔasxam wi-ʔaḍall[i] sabiil* he is a liar and his brother is even worse.

ضلّل *ḍallil[1]* /vt/ to mislead, lead (s.o.) astray. *baqaa-lik talat siniin bi-tḍallilii-ni* you've been leading me up the garden path for three years now! - vn *taḍliil*; ava/pva *miḍallil*.

اتضلّل *ʔitḍallil[1]* or *ʔiḍḍallil[1]* /vi/ to be misled, be led astray. - iva *mitḍallil*.

ض ل ل [2]

ظلّ، ضلّ *ḍill* /n/ shade, shadow. *ma-fii-ʃ wala ḫittit ḍill[i] veer ḍill illi mafyiin* there's not a speck of shade except for the shadows of the passers-by. ‖ *xurzit iḍ-ḍill [needlew]* shadow-stitch. - *xayaal iḍ-ḍill* shadow play. - *ḍill[i] raagil wala ḍill il-ḫeeṭ [prov]* ≈ better to marry than to live alone.

ظلّ *ẓill* /n pl *ẓilaal*/ **1** *[geom]* tangent. **2**↑ (also *ḍill*) shadow. ‖ *xafiif iẓ-ẓill* he has a cheerful disposition.

ضلّيلة *ḍulleela* /n pl *-aat*/ awning.

مظلّة *miẓalla, maẓalla* /n pl *-aat*/ **1** any device (such as a canopy) providing cover or shadow. *maẓalla gawwiyya↑* air cover (operation). **2** parachute.

ظلّل، ضلّل *ḍallil*[2] /vi/ to provide shade. *ɛayziin ʃamsiyya tḍallil ɛaleena* we want a parasol to give us shade. - vn *taḍliil*; ava *miḍallil*.

مظلّل *muẓallal: ʃil-muẓallal bil-ɣamaama* the One Shaded by the Cloud (epithet of the Prophet Muhammad).

اتظلّل *ʃitḍallil*[2] or *ʃiḍḍallil*[2] /vi/ (impersonal) passive of *ḍallil*[2]. *ʃil-ɑabr[i] ma-yguz-ʃ[i] yitḍallil ɛalee* shade should not be cast over tombs. - iva ***mitḍallil***.

استظلّ *ʃistaẓall↑* /vi/ to seek shade. - ava *mistiẓill*.

ض ل م [1]

ضلمة، ظلمة *ḍalma* /n/ darkness. *ɑaaɛid fiḍ-ḍalma* sitting in the dark. -/adjectivally/ *ʃid-dinya ḍalma* it's dark.

ضلم *ḍilim* /adj/ **1** dark, dimly-lit. *makaan ḍilim* a gloomy place. ‖*wiʃʃ-u ḍilim* he has an unpleasant face (or expression). **2** dull, stupid. *muxx-u ḍilim* he's dimwitted.

أضلم *ʃaḍlam* /el/ **1** more/most dark. **2** more/most stupid or dull.

ضلام، ظلام *ḍalaam* /n/ darkness.

ضلّم *ḍallim, ḍallam* **1** /vt/ to darken, make dark. *ḍallimnaa-ha ɛalee* we darkened his world for him. **2** /vi/ to become dark. *ʃid-dinya ḍallimit* it became dark. ‖*ʃid-dinya ḍallimit fi-wiʃʃ-i* my world turned to ashes. - vn *taḍliim*; ava/pva *miḍallim, miḍallam*.

اتضلّم *ʃitḍallim* or *ʃiḍḍallim* /vi/ to be made dark. - iva *mitḍallim*.

ض ل م [2]

ضلمة *ḍulma* <T *dolma*> /n/ stuffed vegetables, specifically without meat.

ض م ا ن see د م ا ن: *ḍamaan*[1], *ḍamangi*

ض م د

ضمادة *ḍumaada, ḍamaada* /n pl *-aat, -aat*/ bandage, dressing.

ضمّد *ḍammad* /vt/ to dress, bandage (wounds). - vn *taḍmiid*; ava/pva *miḍammad*.

اتضمّد *ʃitḍammad* or *ʃiḍḍammad* /vi/ to be dressed, be bandaged (of wounds). - iva *mitḍammad*.

ض م ر [1]

ضمر *ḍamar*[1] or *ḍumur (u)* /vi/ to shrivel. *ʃil-bihiima ḍamarit* the animal became emaciated. ‖*ʃil-mara ḍamarit* the woman became too old for sex. - vn *ḍamr, ḍumuur*; ava ***ḍaamir, ḍamraan***.

ضمّر *ḍammar* /vt/ to cause to dry up. - vn *taḍmiir*; ava/pva *miḍammar*.

اتضمّر *ʃitḍammar* or *ʃiḍḍammar* /vi/ passive of *ḍammar*. - iva ***mitḍammar***.

ض م ر [2]

ضمر *ḍamar*[2] ***(u)*** /vt/ to harbour or intend (evil). *bi-yuḍmur-lak if-ʃarr* he harbours evil intentions towards you. ‖*waʃwiʃ id-dakar w-uḍmur* whisper to the large shell and ponder (instruction given in shell divination). - vn *ḍamr*; ava *ḍaamir*; pva *maḍmuur*.

ضمير *ḍamiir* /n pl *ḍamaayir*/ **1** conscience. **2** *[gram]* pronoun.

اتضمر *ʃitḍamar* or *ʃiḍḍamar* /vi/ passive of *ḍamar*[2]. - iva *mitḍimir*.

أضمر *ʃaḍmar* = ***ḍamar***[2]. - vn *ʃiḍmaar*; ava *miḍmir, muḍmir*; pva ***muḍmar***.

ض م ر [3]

مضمار *miḍmaar↑* /n pl *maḍamiir*/ race course. ‖*ma-ɧadd[i]-ʃ yixlib-u ʃ-ʃayy miḍmaar* nobody can defeat him in any field.

ض م م

ضمّ *ḍamm (u)* /vt/ **1** to join, unite. *ḍummi riglee-ki f-baɛaḍ* keep your legs together. *ḍammit ibn-a-ha l-sidr-a-ha* she embraced her son. **2** to comprise, contain. *ʃid-daftar bi-yḍumm[i] kull[i] ʃasmaaʃ il-muwaẓẓafiin* the ledger contains all the employees' names. **3** to harvest. *baɛd[i] ma yinʃaf il-barsiim niḍumm-u bil-manaagil* after the clover dries out, we harvest it with sickles. - vn *ḍamm, ḍamamaan*; ava *ḍaamim*; pva *maḍmuum*.

ضمّة *ḍamma* /n pl *-aat*/ **1** instance noun of *ḍamm*. **2** *[gram]* vowel sign for short *u* (in Arabic writing).

انضمّ *ʃinḍamm* /vi/ **1** to join, join oneself. *ʃinḍammeet lin-niqaaba* I joined the union. **2** to be joined, be united. **3** to be comprised, be contained. **4** to be harvested. - vn *ʃinḍimaam*; ava/iva *minḍamm*.

اتضمّ *ʃitḍamm* or *ʃiḍḍamm* = *ʃinḍamm*. - ava/iva *mitḍamm*.

ض م ن [1]

ضمن *ḍaman (a)* /vt/ **1** to guarantee, ensure. *ɛalaʃaan niḍman maɧaṣiil wafra* so that we may ensure abundant crops. **2** to act as guarantor for. *ʃaṣɧaab-i ɧa-yiḍmanuu-ni* my friends will act as my guarantors. *mixassil wi-ḍaamin ganna* (undertaker and guarantor of heaven) one who can do the impossible. - vn *ḍamaan*; ava *ḍaamin*; pva *maḍmuun*.

ضمان *ḍamaan*[2] /n pl *-aat*/ guarantee, surety. *ḍamaan ʃaxṣi* personal guarantee. *ḍamaan il-ɤeer* second-person guarantee.
¶ *ḍamaanan li-* as a guarantee of.
ضمانة *ḍamaana* /n pl *-aat*/ **1** surety. *ɛala ḍamant-i* on my guarantee, I guarantee it. **2** guarantee. *ʃis-saaɛa gaaya wi-mɛaaha ḍ-ḍamaana* the watch came from the factory with a guarantee (certificate).
ضامن *ḍaamin* /n */ guarantor, warrantor. *ḍaamin mitḍaamin [leg]* co-signatory.
أضمن *ʃaḍman* /el/ safer/safest, surer/surest.
اتضمن *ʃitḍaman* or *ʃiḍḍaman* /vi/ to be guaranteed. -iva *mitḍimin*.
اتضامن *ʃitḍaamin* or *ʃiḍḍaamin* /vi/ **1** to unite, form a group, stand together for a common purpose. **2** to accept joint liability. *ḍaamin mitḍaamin [leg]* co-signatory. -iva *mitḍaamin*.
تضامن *taḍaaman*↑ = *ʃitḍaamin*. -vn *taḍaamun*; ava *mutaḍaamin*.
تضامن *taḍaamun*↑ /n/ **1** *[comm]* joint liability. **2** *[pol]* solidarity. *ʃit-taḍaamun il-ʃifriiqi l-ʃasyawi* Afro-Asian solidarity.

ض م ن[2]
ضمن *ḍimn* or, more commonly, *min ḍimn* /prep/ among, included in, along with. *fii min ḍimn il-ɛidda btaɛit-hum ʃakuuʃ* included in their equipment is a hammer. *laazim yikuun miqaddim ḍimn il-ʃawraaq bitaɛt-u ʃihaadit il-milaad* he must present a birth certificate among his papers.
ضمني *ḍimni*↑ /adj/ implicit.
مضمون *maḍmuun*↑ /n/ **1** content. **2** purport, meaning.
ضمّن *ḍamman*↑ /vt/ to include in. *ḍamman taqriir-u kull iqtiraḥaat-u* he put all his suggestions into his report. -vn *taḍmiin*; ava/pva *miḍamman*.
اتضمّن *ʃitḍamman* or *ʃiḍḍamman* **1** /vi/ to contain. **2** to be made to include. **3** to be included. -ava/iva *mitḍamman*.

ض م ن[3]
دومينو *ḍumana, ḍuminu* <perh It> /n/ **1** /coll/ domino(es). **2** set of dominoes. **3** game of dominoes.
ضمّن *ḍammin* /vi/ to play the winning piece in a game of dominoes. -vn *taḍmiin*; ava *miḍammin*.
اتضمّن *ʃitḍammin* or *ʃiḍḍammin* /vi/ to be won (of a game of dominoes). *ma-yitḍammin-ʃ*[i] *w-ɛandi kull il-qiṭaɛ di* the game can't possibly be over while I still have all these pieces! -iva *mitḍammin*.

ض م ن[4] see د م ا ن: *ḍamaan*[1], *ḍamangi*

ض ن ا see ض ن ى: *ḍana*

ض ن ك
ضنك *ḍank* /n/ poverty, hardship.

ض ن ن
ضنّ *ḍann (i)* /vi/ to be stingy. *ʃin-niil ḍann*[a] *ɛaleehum* the Nile withheld its bounty from them. -vn *ḍann*; ava *ḍaanin*; pva *maḍnuun*.
ضنين *ḍaniin* /adj/ small, scanty. -/adverbially/ *ḍaniin (lamma) nifuuf-u* we seldom see him.
اتضنّ *ʃitḍann* or *ʃiḍḍann* /vi/ (impersonal) passive of *ḍann*. *ʃid-dawa ma-yitḍann*[i]*-ʃ bii* medicine is not to be denied to anyone. -iva *mitḍann*.
انضنّ *ʃinḍann* = *ʃitḍann*. -iva *minḍann*.

ض ن ى
ضنى *ḍana*[1] *(i)* /vt/ to wear out, exhaust (particularly of love or passion). -vn *ḍana*; ava *ḍaani*; pva *maḍni*.
ضنى *ḍana*[2] /n/ **1** tormenting love. **2** offspring. *ʃiḍ-ḍana ɤaali* people's children are precious to them. *ya ḍanaa-ya [women]* ≈ my dear! *ya ḍanaa-ya ɛala ʃabaab-ak* you poor child to die so young!
انضنى *ʃinḍana* /vi/ to be or become worn out, be or become exhausted. -ava/iva *minḍini*.
أضنى *ʃaḍna*↑ = *ḍana*[1]. -ava *muḍni*.
مضنى *muḍni*↑ /adj/ exhausting. *ɛamal muḍni* exhausting work.

ض ه
ضه *ḍah* /fem n, pl *-aat*/ fifteenth letter of the Arabic alphabet. -also *ḍaad*.

ض ه د
اضطهد *ʃiḍṭahad*↑ or *ʃiṭṭahad* /vt/ to victimize, persecute. -/the literary passive occurs/ *humma b-yuḍṭahadu kida leeh* why are they persecuted so? -vn *ʃiḍṭihaad*; ava *miḍṭahid*; pva *muḍṭahad*.

ض ه ر
ضهر، ظهر *ḍahr* /n pl *ḍuhuur, ḍuhúra*/ **1a** back (of a human or animal). *sibaaḥit iḍ-ḍahr* backstroke (in swimming). *faḍaḥuu-ni min wara ḍahr-i* they spoke ill of me behind my back. ‖ *ʃiṭ-ṭifl*[i] *nizil bi-ḍahr-u* the child was born in a breech position. -*lu ḍahr* he has backing, he has support. *ʃilli lu ḍahr*[i] *ma-yinḍirib-ʃ*[i] *ɛala baṭn-u [prov]* one who is strongly backed will not be struck in the belly. -*min ḍahr* descended from, as in *ʃibn-i min ḍahr-i* my own son, the son of my loins, *raagil min ḍahr*[i] *raagil* a real man. **1b** back, reverse. *ḍahr il-kaff* the

back of the hand. *ɛala ḍahr il-baab* on the back of the door. *fi-ḍahr il-mabna* at the back of the building. ‖*ḫ-aʃimm*[a] *ɛala ḍahr*[i] *ʕiid-i baqa* (shall I smell (it) on the back of my hand, then?) ≈ do you expect the birds to tell me? — /no pl/ **2** surface. *ɛala ḍahr il-mayya* on the surface of the water. *ɛala ḍahr il-markib* on board ship. ‖*da-lli ʧiɛt*[i] *bii min ḍahr id-dinya* ≈ is this all I have to show from the world? **3** menses. *ɛaleeha ḍahr-a-ha* she is menstruating.

ظهر *ẓahr: ɛan ẓahr*[i] *qalb*↑ (memorized) by heart.

ظهريّة، ضهريّة *ḍahriyya* /n/ **1** back part, back piece. **2** working edge (of a grindstone).

ظهر، ضهر *ḍuhr* /n/ **1** period extending from approximately midday until the middle of the afternoon. *ʕarbaɛa baɛd iḍ-ḍuhr* four o'clock in the afternoon. *warret-lu nuguum iḍ-ḍuhr* I made him see stars, I gave him a hard time. -/adverbially/ *ʕin-naḥar-da ḍ-ḍuhr* today at noon. *ʕis-saaɛa tneen iḍ-ḍuhr* two o'clock in the afternoon. **2** *[Isl]* midday prayer.

ظهريّة، ضهريّة *ḍuhriyya* /n/ period around midday. *taɛaala fiḍ-ḍuhriyya* come about noon. -/adverbially/ *xaragit iḍ-ḍuhriyya w-lissa ma-rigɛit-ʃ* she went out around noon and hasn't come back yet.

ظهارة، ضهارة *ḍihaara* /n/ **1** top coat (of paint). **2** back part, back piece.

ظهير *ẓahiir* /n/ *[soccer]* back.

ظهّر، ضهّر *ḍahhar* /vt/ to paint with a finishing coat. *ʕin-naqqaaʃ ḍahhar ḫeṭaan il-beet* the painter applied a finishing coat to the walls of the house. -vn *taḍhiir*; ava/pva *miḍahhar*.

اتضهّر *ʕitḍahhar* or *ʕiḍḍahhar* /vi/ to be painted with a finishing coat. -iva *mitḍahhar*.

ظهّر *ẓahhar*[1] /vt/ to endorse (a cheque by signing on the back). -vn *taẓhiir*; ava/pva *miẓahhar*.

اتظهّر *ʕitẓahhar*[1] or *ʕiẓẓahhar*[1] /vi/ to be endorsed (of a cheque, by being signed on the back). -iva *mitẓahhar*.

ض ه ى

ضاهى *ḍaaha* /vt/ **1** to check (signatures, finger-prints etc.) for verification. **2** to match, correspond with. *ʕil-loneen yiḍaahu baɛḍ* the two colours match. -vn *miḍahiyya, muḍahaah*; ava/pva *miḍaahi*.

اتضاهى *ʕitḍaaha* or *ʕiḍḍaaha* /vi/ **1** to be checked for verification. **2** to be matched. -iva *mitḍaahi*.

ض و ء see ض و ى: *ḍooʔ, ḍawʔi, ʔaḍaaʔ*

ض و ض

ضوضاء *ḍawḍaaʔ* /n/ din, noise, clatter.

ض و ى

ضوى *ḍawa (i)* /vi/ to gleam, shine, give off light. -vn *ḍaww, ḍayy*; ava *ḍaawi*.

ضيّ *ḍayy* /n/ light. *ya ḍayy*[i] *ɛeen-i* affectionate form of address, particularly by a mother to her son.

ضوء *ḍooʔ*↑ /n pl *ʔaḍwaaʔ*/ light. *ḍooʔ ṭabiiɛi* natural light. *fi-ʔawwil ḍooʔ* at first light. *ɛala ḍooʔ kalaam-ak* in the light of what you say. *ʔaḍwaaʔ il-madiina* the city lights. ‖*ʔiṣ-ṣoot wiḍ-ḍooʔ* Son et Lumière.

ضوئى *ḍawʔi* /adj/ pertaining to light. *sana ḍawʔiyya* light year.

أضاء *ʔaḍaaʔ*↑ /vt/ to light, illuminate. *quyuud il-ʔiḍaaʔa* lighting restrictions. -vn *ʔiḍaaʔa*; ava *muḍiiʔ*; pva *muḍaaʔ*.

ض ى ع

ضاع *ḍaaɛ (i)* /vi/ to get lost, become lost. *ḫumaar-i ḍaayiɛ* my donkey is lost. *ʔana ḫaasis biḍ-ḍayaaɛ* I feel lost. *ʔil-furṣa ḍaaɛit ɛalayya* the opportunity was lost to me. ‖*ḫa-yḍiiɛ da f-da* one thing cancels the other out. *-ṣaayiɛ wi-ḍaayiɛ* ne'er-do-well. *-sabaɛ ṣanaayiɛ wil-baxt*[i] *ḍaayiɛ [prov]* plenty of skill, but no luck! -vn *ḍayaaɛ*↑, *ḍayaɛaan*; ava *ḍaayiɛ*.

ضايعة *ḍayɛa* /n/ name given to an object (such as a fruit stone) used in a variety of the children's game called *ʧurra*.

ضيّع *ḍayyaɛ* /vt/ **1** to lose, cause to be lost. *ḍayyaɛ-li fluus kitiir* he lost me a lot of money. **2** to dissipate, squander. *ḍayyaɛt*[i] *ʔamwaal-ak ɛala l-kukayiin* you have squandered your money on cocaine. *ʔaṣḥaab-u ḍayyaɛuu* his friends made him go to waste. -vn *taḍyiiɛ*; ava/pva *miḍayyaɛ*.

اتضيّع *ʔitḍayyaɛ* or *ʔiḍḍayyaɛ* /vi/ **1** to be lost. **2** to be squandered, be wasted. -iva *mitḍayyaɛ*.

ض ى ف [1]

ضاف *ḍaaf (i)* /vt/ to add. *ʔil-waaḥid yiḍiif ʧirf*[i] *kida ʧirf*[i] *kida* one adds a piastre here, and a piastre there. -/the literary passive imperfect form occurs in elevated speech/ *ʔil-mawaadd illi b-tuḍaaf ɛalee* the substances which are added to it. -vn *ḍayafaan*; ava *ḍaayif*.

اتضاف *ʔitḍaaf* or *ʔiḍḍaaf* /vi/ to be added. -iva *mitḍaaf*.

انضاف *ʔinḍaaf* = *ʔitḍaaf*. -iva *minḍaaf*.

أضاف *ʔaḍaafʔ* = *ḍaaf*. -vn *ʔiḍaafa*; ava *miḍiif, muḍiifʔ*; pva *muḍaaf*.

إضافة *ʔiḍaafa* **1** /vn/ ‖*bil-ʔiḍaafa ʔila ẓaalik*↑ in addition to that. — /n pl *-aat*/ **2** addition. *ʔil-xuṣuum wil-ʔiḍafaat* deductions and additions. **3** additive. **4** *[gram]* genitive construction.

إضافي *ʕiḍaafi* /adj */ additional, extra. ***muḥaḍraat ʕiḍafiyya*** *[acad]* (1) extra-curricular lectures. (2) lectures over and above a faculty member's workload.

² ض ي ف

ضيف *ḍeef* /n pl *ḍiyuuf, ḍuyuuf*/ guest. ***ʕoodit ḍiyuuf*** guest parlour. ***ʕiḍ-ḍeef il-magnuun yaakul wi-yçuum*** *[prov]* the crazy (i.e. ill-mannered) guest eats and leaves (straight away).

ضيافة *ḍiyaafa, ḍiyaafa* /n/ hospitality. ***baatu f-ḍiyaafit ibn-i*** they spent the night as guests of my son.

مضيفة *maḍyafa, maḍyafa* /n pl *maḍaayif*/ **1** guest-house. **2** *[rur]* large hall used by an extended family for gatherings and entertaining.

مضيف *muḍiif* /n */ steward.

مضيفة *muḍiifa, muḍiifa* /n pl *-aat*/ stewardess, hostess. ***muḍiifa gawwiyya*** air hostess.

ضيّف *ḍayyif* /vt/ to entertain (s.o.) as a guest. - **vn** *taḍyiif*; ava *miḍayyif*.

اتضيّف *ʕitḍayyif* or *ʕiḍḍayyif* /vi/ to be entertained as a guest. - iva *mitḍayyif*.

ضايف *ḍaayif* /vt/ to entertain (s.o.) as a guest. - vn *miḍayfa*; ava *miḍaayif*.

اتضايف *ʕitḍaayif* or *ʕiḍḍaayif* /vi/ to be entertained as a guest. - iva *mitḍaayif*.

استضاف *ʕistaḍaaf* /vt/ to have as a guest. ***ʕig-gamɛa mumkin tistiḍiif-ak ţuul il-mudda*** the university may have you as a guest for the whole period. - vn *ʕistiḍaafa*; ava *mistiḍiif*.

ض ي ق see د ي ق

¹ ض ي م

ضام *ḍaam (i)* to treat unfairly. ***ʕin ʃa-lla z-zaman ma-yḍiim-ak*** *[beggars, women in trad soc]* may you never suffer any misfortune! - vn *ḍayamaan*; ava *ḍaayim*.

انضام *ʕinḍaam* /vi/ to be treated unfairly. - iva *minḍaam*.

² ض ي م see ض ا م : *ḍaama*

ط

ط ا

طا *ṭaa* /fem n/ sixteenth letter of the **Arabic alphabet**. - also *ṭaaʔ, ṭah*.

ط ا ء

طاء *ṭaaʔˆ* /fem n, pl *-aat*/ sixteenth letter of the Arabic alphabet. - also *ṭaa, ṭah*.

ط ا ب

طاب *ṭaab*[1] /n/ game for two players with stone counters and four strips of palm branch, each strip having one green and one white side; the strips are thrown against a vertical surface and the various combinations of green and white govern the movement of the stones on a grid drawn in the dust.

طابة *ṭaaba* /n pl *-aat*/ **1** splint. **2a** one of the strips of palm used in the game of *ṭaab* (q.v.). **2b** winning throw in the game of *ṭaab*. *ya ṭaaba ya ʕitneen ɛuur [prov]* (either a winning throw or one that affects the outcome neither way) ≈ you may win and you can't lose. - *tiigi maɛa l-ɛumy*[1] *ṭabaat [prov]* (the blind may make winning throws) ≈ lucky flukes may occur.

ط ا خ see also ط خ خ

طاخ *ṭaax* onomatopoeia for the sound of a hit, blow, or shot ≈ bang! whack! wham! ‖*nizil fi(i) ṭaax* to beat the daylights out of (s.o.).

ط ا ر

طار *ṭaar*[1] /n pl *-aat*/ large tambourine without jingles. ‖*la yinfaɛ ṭabla wala ṭaar* ≈ of no use whatsoever. - *magnuuna w-massikuu-ha ṭaar [prov]* (she's mad and they put a tambourine in her hand) ≈ they made a bad situation worse.

طارة *ṭaara* /n pl *-aat*/ **1** hoop, wheel. *ʕiṭ-ṭaara bi-tdawwar is-sikkiina* the flywheel turns the blade. ‖*ṭaara ɛaruusi* large tambourine without cymbals, *zaar* word denoting the *daff*. **2** ring-shaped support for a pot (used on the burner of a cooking stove). **3** outer edge, rim.

ط ا ز

طازه *ṭaaza* <P *tâza*> /adj invar/ fresh. *samak ṭaaza* fresh fish. *ʕaxbaar ṭaaza* fresh news. - also *taaza*.

ط ا س

طاسة *ṭaasa* (also *ṭaaṣa*) /n pl *-aat*/ **1** shallow metal bowl. ‖*ṭaasit iṭ-ṭarba* or *ṭaasit il-xaḍḍa* shallow metal bowl used in folk medicine; persons subjected to a fright drink specially treated water from it for seven days as a protection against sterility. **2** frying-pan. **3** hub-cap. **4** top of the skull, poll. ‖*ɛammar iṭ-ṭaasa* to get high, get loaded. **5** helmet. **6** saucer-shaped projection on the stem of a water-pipe (see Pl.I, 3).

ط ا ص see ط ا س: *ṭaaṣa*

ط ا ط see ط ط ى: *ṭaaṭa*

ط ا ق see [1] ط و ق and [2] ط و ق: *ṭaaq, ṭaaqa, ṭaaqa, ṭaqiyya*

ط ا ه ا

طه *ṭaaha* /prop n/ male name, sometimes used in reference to the Prophet Muhammad.

ط ا ى م

طايم *ṭaayim* (also *haṭṭaayim*) <Engl *time*> /n/ *[sport]* half (in a match). *ʕiṭ-ṭaayim il-ʕawwalaani* the first half.

ط ء ط ء see ط ط ى: *ṭaʔṭaʔ*

¹ ط ب see also ¹ ط ى ب

طب *ṭab* /interj; contraction of *ṭayyib* (q.v.)/ all right (then), very well (then), o.k. (then). *miʃ ḥa-tiggawwizii - ṭab ya sitt-i ḥa-nfuf-lik ʏeer-u* you won't marry him? very well, young lady, we'll find you someone else. *ṭab - niʒmil ʕeeh dilwaqti* O.K. - what do we do now?

² ط ب see ط ب ج : *ṭubgi*

ط ب ا ر

طوبار *ṭubaar* /n/ kind of grey mullet (Mugil capito).

ط ب ا ن

طبان *ṭabaan* <T *taban*> /n/ collective noun of *ṭabaana* (q.v.).

طبانة *ṭabaana* /unit n, pl *-aat*/ **1** any of a number of devices serving the purpose of containment (e.g., retaining cap for watch jewels, kerbstone, top of a wall, rear end of a rifle butt). **2** sheet of rolled-out dough.

¹ ط ب ب

طبّ *ṭibb* /n/ medicine, medical science. *ʃiṭ-ṭibb il-biṭari* veterinary medicine. *kulliyyit iṭ-ṭibb* the Faculty of Medicine, the School of Medicine. ‖*ṭibb ir-rukka* quack medicine.

طبّى *ṭibbi* /adj */ medical. *ʃihaada ṭibbiya* medical certificate. *ʃanṭit ʃawaazim ṭibbiyya* first aid kit. ‖*ʂuṭn[i] ṭibbi* cotton wool, absorbent cotton. - *ḥaʃiif ṭibbi* high-grade hashish.

¶ *ṭibbiyyan* /adv/ medically.

طبيب *ṭabiib* /n pl *ʃaṭibba*/ doctor, physician. *ṭabiib ʃasnaan* dentist.

طبّب *ṭabbib[1]* /vt/ to nurse (a sick person). - vn *taṭbiib*; ava/pva *miṭabbib*.

اتطبّب *ʃiṭṭabbib[1]* or *ʃiṭṭabbib[1]* /vi/ to be nursed (of a sick person). - iva *miṭṭabbib*.

² ط ب ب

طبّ *ṭabb[1] (u)* /vi/ **1** to fall down, drop. *saaʒit is-saṭḥ[i] ma ṭabb[a] ʒaleehum* when the roof fell in on them. *ʃil-muṣiiba ṭabbit ʒala dmaar-u* disaster befell him. *ʂalb-i ṭabb* my heart sank. ‖*ṭabbeet fi-ʃiid-u* I fell into his clutches. - *ṭabb[i] fik-kalaam* to commit oneself unwittingly. **2** to arrive unexpectedly, pay a surprise visit. *ṭabb[a] ʒaleena zuwwaar wi-ḥna xargiin* visitors arrived suddenly when we were on the point of going out. *ʃil-mufattiʃ misiir-u yṭubb[a] ʒandukum* one day the inspector will come to your place by surprise. *ṭabb[a] ʒalayya min ʏeer maʒaad* he dropped in unexpectedly without an appointment. ‖*(wi-)hubb[i] ṭubb* see *hubb*. **3** to tumble, fall over. *ṭabbeet fil-imtiḥaan* I flunked in the exam. ‖*ʏiriʂ li-wdaan-u f-ḥubb-a-ha w-ṭabb* he fell head over heels in love with her and was completely hooked. - *ma-yṭubb[i] ʃilla ʃ-ʃaaṭir* ≈ it happens only to the best (said to give consolation in misfortune). **4** to tip freely (of scales). *xalli l-mizaan yiṭubb* let the scales tip freely, i.e. give a fair weight! ‖*ṭabb[i] zayy ir-raṭl* he fell for it like a fool. **5** to rise, become very strong (of wind on the Nile). *ʃil-hawa ṭaabib* the wind is blowing hard. — /vt/ **6** to allow (scales) to tip freely. *ṭubb il-mizaan* let the scales tip freely, i.e. give a fair weight! - vn *ṭabb, ṭababaan*; ava *ṭaabib*; pva *maṭbuub*.

طبّ *ṭabb[2]* /n/ strong wind, gale (in the jargon of the Nile boatmen).

طبّ *ṭubb: (wi-)hubb[i] ṭubb* see *hubb*.

مطبّ *maṭabb* /n pl *-aat*/ **1** hole caused by deterioration of the road surface, pothole. ‖*maṭabb[i] hawaaʃi* air-pocket. **2** pitfall, catch. *ʃis-suʃaal da maṭabb[i] gaamid* that's a very tricky question.

اتطبّ *ʃiṭṭabb* or *ʃiṭṭabb* /vi/ (impersonal) passive of *ṭabb[1]* 1. ‖*ma-yiṭṭabb[i]-ʃ ʒalayya ḥiila* I don't fall for any tricks - iva *miṭṭabb*.

انطبّ *ʃinṭabb* = *ʃiṭṭabb*. - iva *minṭabb*.

طبّب *ṭabbib[2]* /vt/ **1** = *ṭabb[1]* 4. **2** to cause to fall. **3** to cause to arrive unexpectedly. *ʃeeh illi ṭabbib-u ʒaleena fis-saʒaa-di* what brought him to our place at this hour? - vn *taṭbiib*; ava/pva *miṭabbib*.

اتطبّب *ʃiṭṭabbib[2]* or *ʃiṭṭabbib[2]* /vi/ passive of *ṭabbib*. - iva *miṭṭabbib*.

³ ط ب ب

طبّة *ṭabba* <prob It *tappo*> /n pl *-aat*/ **1** (sink) stopper, (drain) plug. *ṭabbit markib* boat bung. **2** screw-cap (on the side or underside of a pipe or tank).

ط ب ج

طوبجى *ṭubgi* <T *topçu*> /n pl *-yya*/ *[obsol]* artilleryman.

ط ب خ

طبخ *ṭabax (u)* /vt/ **1** to cook (food). *ḥa-tuṭbuxu ʃeeh in-nahar-da* what are you going to cook today? *ʃilli ylaaʂi lli yuṭbux-lu leeh yiḥraʂ ṣawabʒ-u [prov]* (why should one who finds someone to cook for him burn his fingers?) don't do your own dirty work if you can find someone to do it for you. **2** to prepare (a mixture, a substance) by heating. *bi-nuṭbux in-niʃa* we cook up the starch. **3** to cook up, hatch (a plot and the like). *ṭabaxu l-mawduuʒ wi-naffiʒit-u liihum* they hatched up the

plan and she carried it out for them. *miin ṭabax iṭ-ṭabxa* who engineered the plot? — /vi/ **4** to prepare *ṭabiix*. - vn *ṭabx, ṭabiix*; ava *ṭaabix*; pva *maṭbuux*.

طبخ *ṭabx* **1** /n/ any of a variety of plastic pastes used by artists and in industry. **2** /adj invar/ solid, compact. *ʏuweeʃa ṭabx* a solid bracelet.

طبخة *ṭabxa* /inst n, pl *-aat*/ a (single) cooking. ‖*ṭabax ṭabxa* he cooked up a plot. *-xassar iṭ-ṭabxa ɛafaan bi-malliin filfil [prov]* (he spoiled the cooking for (want of) a millime's worth of pepper) ≈ he spoiled the ship for a ha'porth of tar.

طبيخ *ṭabiix* /n/ **1** cooking, cuisine. ‖*ʃif-firka di fuʏl-a-ha ṭabiix* this company is thoroughly corrupt. **2a** dish cooked with stock or sauce (as opposed to fried dishes or salads). **2b** *[rur]* vegetables intended for cooking in stock or sauce.

طبّاخ *ṭabbaax* /n */ (male) cook, chef. ‖*ṭabbaax is-simm' bi-yduuq-u [prov]* (one who cooks poison tastes it) everybody shares in the benefit of his actions.

مطبخ *maṭbax* /n pl *maṭaabix*/ kitchen.

اتطبخ *ʃiṭṭabax* or *ʃiṭṭabax* /vi/ passive of *ṭabax*. - iva *miṭṭibix*.

انطبخ *ʃinṭabax* = *ʃiṭṭabax*. - iva *minṭibix*.

طبّخ *ṭabbax* /vt/ **1** to prepare (a mixture, paste or the like) by cooking. **2** to cook up (a plot, trick etc.). - vn *taṭbiix*; ava/pva *miṭabbax*.

تطبيخة *taṭbiixa* /n pl *-aat*/ **1** mixture of different herbs or medicines prepared by cooking (in folk medicine). **2** confusion, mess.

اتطبّخ *ʃiṭṭabbax* or *ʃiṭṭabbax* /vi/ passive of *ṭabbax*. - iva *miṭṭabbax*.

¹ ط ب ر see ط ب ا ر : *ṭubaar*

² ط ب ر see ط ب و ر : *ṭabuur*.

ط ب س

طبسيّة *ṭubsiyya* /n pl *-aat, ṭabaasi/ [rur]* large deep metal bowl.

ط ب ش

طبش *ṭabaf' (u)* **1** /vi/ to collide, bump. *ʃil-markib ṭabafit fir-raṣiif* the ship collided with the pier. **2** /vt/ to hit, bump into. *ʃil-ɛarabiyya kaanit ḥa-tuṭbuf-ak* the car nearly hit you. - vn *ṭabafaan, ṭabf*; ava *ṭaabif*; pva *maṭbuuf*.

طبش *ṭabaf²* /n pl *ṭubúfa/ [abus]* ugly mug.

أطبش *ʃaṭbaf* /adj, fem *ṭabfa*, pl *ṭubf/ [deris]* dim-sighted.

اتطبش *ʃiṭṭabaf* or *ʃiṭṭabaf* /vi/ to be hit, be bumped into. - iva *miṭṭibif*.

انطبش *ʃinṭabaf* = *ʃiṭṭabaf*. - iva *minṭibif*.

طبّش *ṭabbif* /vi/ **1** to move about blindly. *ʃin-nuur iṭṭafa wil-waaḥid baqa maafi yṭabbif* the light went out and I groped about blindly. **2** to splash about in water. *ʃiṭɛallimt' il-ɛoom taṭbiif* I learnt swimming by splashing about in the water, I learnt to swim all by myself. - vn *taṭbiif*; ava *miṭabbif*.

اتطبّش *ʃiṭṭabbif* or *ʃiṭṭabbif* /vi/ (impersonal) passive of *ṭabbif*. *di mayya yiṭṭabbif fiiha* is this the sort of water for splashing around in! - iva *miṭṭabbif*.

ط ب ش ر

طباشير *ṭabafiir* (also *tabafiir*) /n/ (blackboard) chalk.

طباشيرة *ṭabafiira* (also *tabafiira*) /n/ stick or piece of chalk.

طباشيراية *ṭabafiraaya* (also *tabafiraaya*) = *ṭabafiira*.

ط ب ط ب

طبطب *ṭabṭab* /vi/ to give repeated pats (particularly of affection or consolation). *ṭabṭabit ɛal-ḥuṣaan wi-ddit-lu sukkar* she patted the horse and gave it some sugar. *ma-ṭṭabṭabii-ʃ ɛal-ɛagiina ḥa-twassaxii-ha* stop patting the piece of dough, you will make it all dirty. - vn *ṭabṭaba*; ava *miṭabṭab*.

طبطاب *ṭubṭaab: ga ɛala ṭ-ṭubṭaab* it came just as (and when) wanted, as in *ʃif-fuʏla gat-lu ɛala ṭ-ṭubṭaab* the job just fell into his lap.

اتطبطب *ʃiṭṭabṭab* /vi/ (impersonal) passive of *ṭabṭab*. *ʃana miʃ ɛaayiz yiṭṭabṭab ɛalayya ṭuul il-waqt* I don't want to be patted (on the shoulder) all the time. - iva *miṭṭabṭab*.

ط ب ع

طبع *ṭabaɛ (a)* /vt/ **1** to print. *ṭabɛ il-film* printing the film. **2** to mark, impress. *ʃil-ɛiiʃa ṭabaɛit-u b-ṭabɛa wiḥʃa* life has stamped him with an ugly nature. — /vi/ **3** to leave an impression, leave a mark. *ʃil-xitm' da miʃ mumkin yiṭbaɛ ɛaʃ-ʃamɛ* this stamp will not make an impression on wax. - vn *ṭabɛ, ṭabaɛaan*; ava *ṭaabiɛ*; pva *maṭbuuɛ*.

طبع *ṭabɛ* /n pl *ʃaṭbaaɛ, ṭibaaɛ/* nature, character. *ṭabɛ' damawi* sanguine temperament. *ʃiṭ-ṭabɛ' fii ʏallaab* his nature gets the better of him. *baliid iṭ-ṭabɛ* lazy and indolent by nature. *da ṭabɛ id-dinya* that's the way things are. *subḥaan allaah fi-ṭabɛ-ak* I can't make you out. ‖*biṭ-ṭabɛ* of course, naturally.

¶ *ṭabɛan* /adv/ of course, naturally. *ma-huwwa ṭabɛan* but of course.

طبعة *ṭabɛa* /n pl *-aat*/ **1** instance noun of *ṭabɛ*. **2** printing, impression. *ʃiṭ-ṭabɛa ṯ-ṯanya ḥa-tiṭlaɛ ʠurayyib* the second impression (of the book) will be out soon. **3** stamp of character. *ʃil-biiʃa ṭabaɛit-hum bi-ṭabɛa zifra* the environment left an unpleasant mark on them.

طابع *ṭaabiɛ, ṭaabaɛ* /n/ **1**↑ /pl *ṭibaaɛ*/ characteristic, feature, cast. *ʃuɤniyya laha ṭaabaɛ xafiif* a song of light mood. *wiff-a-ha luh ṭaabiɛ muɛayyan* her face has a particular look about it. **2** /pl *ṭawaabiɛ*/ **2a** postage stamp. **2b** impression, stamp. ‖*ṭaabiɛ il-ḥusn* dimple in the chin.

مطبوعات *maṭbuɛaat* /pl n/ printed materials, publications.

طباعة *ṭibaaɛa* /n/ (art or trade of) printing. *makanit ṭibaaɛa* printing press.

طبيعة *ṭabiiɛa* /n/ **1** *ʃiṭ-ṭabiiɛa* nature, the natural world. *gamaal iṭ-ṭabiiɛa* the beauty of nature. **2** natural state, normal condition. *ʃiṭ-ṭaʂlaʠa baʠit iṭ-ṭabiiɛa f-ʃuɤl-i-na walla ʃeeh* has shoddiness become our norm of work, or what? ‖*bi-ṭabiiɛit il-ḥaal* normally, as a matter of course. - *ɛala ṭ-ṭabiiɛa* in situ, as in *muhandis il-misaaḥa b-yiṭlaɛ yiftaɤal ɛaṭ-ṭabiiɛa* the surveying engineer goes to work on the site, *nirgaɛ nifuuf il-ḥikaaya ɛala ṭabiɛit-ha* let's go back and examine the matter in context. **3** physics. *ṭabiiɛa nawawiyya* nuclear physics. — /pl *ṭabaayiɛ*/ **4** nature, character. *ʃiṭ-ṭabiiɛa l-ʃinsaniyya* or *ṭabiiɛit il-ʃinsaan* human nature. *ṭabiiɛit if-ʃuɤl* the nature of the work. ‖*huwwa ṭabiɛṭ-u ynaam badri* it's his custom to go to bed early.

طبيعي *ṭabiiɛi* **1** /adj */ **1a** natural, pertaining to nature. *ḥariir ṭabiiɛi* (pure) silk. *ʃil-ɛuluum iṭ-ṭabiɛiyya* the natural sciences. ‖*ṭarḥa ṭabiiɛi* silk headveil. **1b** physical. *ṭibb[1] ṭabiiɛi* physical medicine. *ɛilaag ṭabiiɛi* physiotherapy. **1c** natural, normal. *baṭn-a-ha rigɛit lif-ʃakl iṭ-ṭabiiɛi* her abdomen has returned to its normal size. *wilaada ṭabiɛiyya* normal childbirth. **2** /adv/ **2a** of course, naturally. **2b** by nature. *ʃil-mawaasiir il-fuxxaar ṭabiiɛi ɛazla lil-kahraba* pipes of faience are, by nature, non-conductors of electricity.

طبّاع *ṭabbaaɛ* /n */ printer.

طبّيع *ṭabbiiɛ* /n pl *ṭabbiiɛa*/ printer.

مطبعة *maṭbaɛa* /n pl *maṭaabiɛ*/ **1** printing press. *maṭbaɛit ʃistinsil* mimeograph machine: **2** printing house, press.

مطبعجي *maṭbaɛgi* /n pl *-yya*/ printer.

اتطبع *ʃiṭṭabaɛ* or *ʃiṭṭabaɛ* /vi/ passive of *ṭabaɛ*. -iva *miṭṭibiɛ*.

انطبع *ʃinṭabaɛ* = *ʃiṭṭabaɛ*. - vn *ʃinṭibaaɛ*; iva *minṭibiɛ*.

انطباع *ʃinṭibaaɛ*↑ /n/ impression, notion, conception.

انطباعة *ʃinṭibaaɛa*↑ /unit n, pl *-aat*/ an impression, a notion, a conception.

انطباعي *ʃinṭibaaɛi* /adj/ impressionistic, intuitive, subjective.

طبّع *ṭabbaɛ* /vt/ **1** to cause to adapt or conform (to s.th.). *ṭabbaɛt[i] mraat-i ɛala ṭabɛ-i* I moulded my wife to my own nature. *ṭaṭbiiɛ iṭ-ṭabl* synchronization of the drum rhythm (to the dance). **2** *[tech]* to temper, check and grind (the cutting parts of a lathe). - vn *ṭaṭbiiɛ*; ava/pva *miṭabbaɛ*.

اتطبّع *ʃiṭṭabbaɛ* or *ʃiṭṭabbaɛ* /vi/ to be or become adapted. *ʃiṭṭabbaɛt[i] bil-beet xalaaṣ* I've finally got used to the house. *ʃiṭ-ṭabɛ[i] yiɤlib it-taṭabbuɛ [prov]* nature is stronger than nurture. - vn *taṭabbuɛ*; ava/iva *miṭabbaɛ*.

ط ب غ ر –

طبوغرافيا *ṭubuɤrafya* <It> /n/ topography.

طبوغرافي *ṭubuɤraafi* /adj/ topographical.

ط ب ق

طبق *ṭabaʠ[1] (u, a)* **1** /vt/ to fold in two. *ṭabaʠ ir-riɤiif ɛag-gibna w-ʠaɛad yaakul fii* he folded the loaf around the cheese and started eating it. — /vi/ **2** to pierce the ears (for earrings). *ʠulayyil ʾilli b-yuṭbuʠu l-banat-hum il-ʃayyam-di* not many people nowadays have their daughters' ears pierced. **3** to take a constricting hold. *ṭabaʠt[i] f-zoor-u* I grabbed his throat. ‖*nafas-i ṭaabiʠ ɛalayya* I feel suffocated. - *ʃil-buliiṣ ṭabaʠ ɛala l-beet* the police closed in on the house. - vn *ṭabʠ, ṭabaʠaan*; ava *ṭaabiʠ*.

طبقة *ṭabʠa* /n pl *-aat*/ bunch, handful. *ṭabʠit baʠduunis* a bunch of parsley.

طابق *ṭaabiʠ[1]* /n pl *ṭawaabiʠ*/ **1** storey, floor. **2** *[plumb]* screw-cap on the bent sealing-pipe of a sink, bath or wash-basin. ‖*xalli ṭ-ṭaabiʠ mastuur* ≈ leave well alone, don't make a scandal. **3** chip used in games, such as backgammon or draughts. **4** round in games such as backgammon and dominoes.

طبق *ṭibʠ: ṭibʠ il-ʃaṣl* identical replica, exact copy. ¶ *ṭibʠan li-*↑ /prep/ according to. *ṭibʠan li-ʃaḥkaam il-ʠanuun* according to the provisions of the law.

طبق *ṭabaʠ[2]* /n pl *ṭubaaʠ, ʃaṭbaaʠ*/ **1** plate, dish. ‖*ṭabaʠ xuuṣ* shallow basket of palm fronds. - *ṭabaʠ ṭaayir* flying saucer. - *ṭabaʠ il-buṣla* compass bowl. - *ṭabaʠ il-yoom* today's special, dish of the day. - *ṭabaʠ baladi* circular motif in tent appliqué work (see Pl.H, 17). **2** clay pigeon.

طبقة *ṭabaʠa* /n pl *-aat*/ **1a** layer. *taḥtaha ṭabaʠit raml* under it is a layer of sand. **1b** coating. *ṭabaʠit kuruum*

chrome plating. *ʕaleeha ṭabaqa fusfuriyya ʕaʃaan tinawwar fil-leel* it has a phosphorescent coating so it will glow at night. **2** class, level. *ʔiṭ-ṭabaqa l-kadḥa* the working class. **3** tone, register (in music or speech). *ṣoot-u ylaali fiṭ-ṭabaqa l-ʕalya* his voice rings in the high register. *ʔil-mumassil yiḥawwil iṭ-ṭabaqa l-ʕadiyya l-ṭabaqa nfiʕaliyya* the actor changes from normal pitch to a melodramatic pitch.

مطبقيّة *maṭbaqiyya* /n pl *-aat*/ **1** plate rack. **2** type of flat basket. **3** any large kind of bowl.

اتطبق *ʔiṭṭabaq* or *ʔiṭṭabaq* /vi/ **1** to apply, be relevant. *ʔin-nuṣuṣ il-qanuniyya lli mumkin tiṭṭibiq ʕalee* the legal texts which can be applied to him. **2** to be congruent. **3** passive of *ṭabaq*[1]. - ava/iva *miṭṭibiq*.

انطبق *ʔinṭabaq* = *ʔiṭṭabaq*. - ava/iva *minṭibiq*.

طبّق *ṭabbaq* /vt/ **1a** to fold, fold up. *ṭabbaqit il-ɣasiil* she folded up the laundry. *ṭabbaq ʔiid-u ʕal-ʔirf* he closed his hand on the piastre. ‖ *(fiṭiir) miṭabbaq [rur] = (fiṭiir) miʃaltit* (q.v.). **1b** to crush, bend, dent, crumple. *ʔil-ʔutubiis ṭabbaq il-ʕarabiyya* the bus crushed the car. **2a** to fit together, synchronize, make congruent. *muhandis iṣ-ṣoot ṭabbaq iṣ-ṣoot ʕala ṣ-ṣuura* the sound engineer dubbed the sound-track onto the film. **2b** to apply, implement. *taṭbiiq ʕamali liṭ-ṭariiqa di* a practical application of this method. **3**↓ to compare. **4** *[mus]* to syncopate. **5** to work (two consecutive) shifts. *ṭabbaq (il-leel ʕan-nahaar) wi-xad il-yoom kull-u noom* he worked a double shift (night and day) and (then) took a whole day for sleeping. **6** to extend (a drawn game) by doubling the score at which the players aim in order to determine the winner. - vn *taṭbiiq*; ava *miṭabbaq*.

تطبيق *taṭbiiq* /n pl *-aat*/ repetition drill for reinforcement (in education).

تطبيقة *taṭbiiqa, taṭbiiqa* /pl *-aat, -aat*/ unit noun of *taṭbiiq*.

تطبيقى *taṭbiiqi* /adj/ applied. *ʔil-funuun it-taṭbiqiyya* the applied arts.

اتطبّق *ʔiṭṭabbaq* or *ʔiṭṭabbaq* /vi/ passive of *ṭabbaq*. - iva *miṭṭabbaq*.

طابق *ṭaabiq*[2] /vt/ **1** to match, compare. *ṭabiqt*[i] *ʕiimit if-ʃiik bil-fatuura* I checked the value of the cheque against the invoice. **2** to match with. *ʔil-farditeen ṭabqu baʕḍ* the two (shoes) matched. *ʔil-baṣamaat muṭabqa* the finger-prints match (one another). - vn *miṭabqa, muṭabqa*; ava *miṭaabiq, muṭaabiq*.

مطابقة *muṭabqa* /n pl *-aat*/ **1** correspondence, congruity. **2** comparison.

اتطابق *ʔiṭṭaabiq* or *ʔiṭṭaabiq* /vi/ to be matched, be compared. - vn *taṭaabuq*; iva *miṭṭaabiq*.

ط ب ل

طبل *ṭabal (u)* /vt/ to drum. *ṭabal ṭabla w-zamar zamra* (1) he got a lot of fuss and attention. (2) he had a single shot at it. - vn *ṭabl*.

طبل *ṭabl* /n/ **1** (sound of) drumming. ‖ *ṭabl*[i] *w-muzmaar* noisy celebration. - *ʔism-u zayy iṭ-ṭabl*[i] *fis-suuq* he's very well-known. **2** /pl *ṭubuul*/ (large) drum. *zayy iṭ-ṭabl - ṣoot ʕaali w-goof xaali [prov]* (like a large drum, with much noise and an empty inside) ≈ empty vessels make the most sound. *ṭabl*[i] *baladi* (1) bass drum. (2) small traditional band basically consisting of one or more bass drum players and one or more *muzmaar* (q.v.) players; such bands play traditional tunes and perform on a variety of occasions such as circumcisions, pilgrims' return from Mecca, weddings etc. ‖ *biṭ-ṭabl il-baladi* with the greatest difficulty, by means of the most extreme measures, as in *ʔitxallaṣna minnu biṭ-ṭabl il-baladi* we got rid of him only with the greatest difficulty, *ma-b-yiṣḥaa-ʃ min in-noom ʔilla biṭ-ṭabl il-baladi* he wakes only with the greatest difficulty, *ʔil-buqaʕ ma-b-tiṭlaʕ-ʃ*[i] *wala biṭ-ṭabl il-baladi* the stains are impossible to remove.

طبلة *ṭabla* /n pl *-aat, ṭuball*/ **1** clay or wooden funnel-shaped drum with a head of goatskin or fishskin (see Pl.J, 5), (also loosely) any kind of drum. *ṭablit il-widn* eardrum. ‖ *la yinfaʕ ṭabla wala ṭaar* ≈ of no use whatsoever. **2** way of drumming, drum rhythm. *ṭablit-u mif kiwayyisa* his drumming isn't good. **3** padlock. **4** wattle (of a turkey).

طبليّة *ṭabliyya* /n pl *ṭabaali*/ **1** low round table made of rough wood (see Pl.C, 2) used particularly in the countryside and by the poor as a dining table. **2** any of a range of wooden platforms used for various purposes (e.g., platform on a crane, crow's-nest on a ship, board on which mortar is mixed). **3** trapdoor of a gallows. — /no pl/ **4** group construction workers who mix and carry mortar.

طبلجي *ṭablagi* /n pl *-yya*/ drummer.

طبّال *ṭabbaal* /n */ drummer.

طبّل *ṭabbil* /vi/ **1** to beat a drum, drum. *fuvlit-u ʔinnu yṭabbil ṭuul in-nahaar* his job is to beat the drum all day long. ‖ *ṭabbil fil-miṭṭabbil* ≈ to break down open doors. **2** to make propaganda. *fii naas kida ṭabiʕit-hum yiṭabbilu lil-ḥukkaam* there are people who are inclined to drum up support for the rulers. - *ṭabbil-li w-ʔana ʔazammar-lak [prov]* (drum for me and I'll pipe for you) you scratch my back and I'll scratch yours. **3** to become infertile (of agricultural land, by reason of soil salination or the like). ‖ *ʔid-dinya ṭabbilit* the whole

thing came to nothing. - vn *taṭbiil*; ava/pva *miṭabbil*.
مطبّلاتي *miṭabbilaati* /n pl *-yya*/ **1** drummer. **2** flatterer.
اتطبّل *ʔiṭṭabbil* or *ʔiṭṭabbil* /vi/ (impersonal) passive of *ṭabbil*. *ʔil-ɛasaakir laazim yiṭṭabbil laha ɛaʃaan tiɛraf timʃi b-xaṭwa waḥda* there must be drumming for soldiers to be able to march in step. - iva *miṭṭabbil*.

ط ب ل و ن see ت ب ل و : *ṭabloon*

[1] ط ب ن
طابونة *ṭabuuna* /n pl *-aat, ṭawabiin*/ *[obsol]* bakery.

[2] ط ب ن see ط ب ا ن : *ṭabaan, ṭabaana*

ط ب ن ج
طبنجة *ṭabanga* <T *tabanca*> /n pl *-aat*/ pistol, revolver. ‖*ḍaarib id-dinya ṭabanga* he doesn't give a damn about anything.

ط ب و ر
طابور *ṭabuur* <T *tabur*> /n pl *ṭawabiir*/ **1** row, queue. *bi-nruṣṣ il-ɛeeʃ ṭabuur* we arrange the bread in a row. *wiqift[i] fiṭ-ṭabuur saɛteen* I stood in the queue for two hours. *yimʃu ṭabuur wara baɛḍ* they walk in single file. ‖*ṭabuur iṣ-ṣubḥ* morning line-up of school-children. - *ʔiṭ-ṭabuur il-xaamis* the fifth column. **2** *[mil]* **2a** drill. *ʔarḍ[i] ṭabuur* parade ground. **2b** column.

ط ب ى
طابية *ṭabya* <T *tabya*> /n pl *-aat, ṭawaabi*/ **1** fortress, castle. **2** rook, castle (in chess). **3** *[rur]* heap of straw.

ط ج ن
طاجن *ṭaagin* /n pl *ṭawaagin*/ **1** earthenware oven casserole. ‖*ʃaayil ṭaagin sitt-ak ɛala dmaaɣ-ak leeh* why are you so upset? **2** any of various oven-cooked dishes such as *ṭaagin makaroona* dish of baked pasta and meat, *ṭaagin baṣal* dish of onions baked with meat and tomato sauce.
¶ *ṭaagin il-ɋafa* the cleft of the nape of the neck. *ʔiddet-lu ɛala ṭaagin ɋafaa* I smacked him bang centre on the neck.
مطجّون *maṭguun* /adj */ muffled (of sound).
طجّن *ṭaggin* /vi/ to speak harshly, lash out with one's tongue. - vn *taṭgiin*; ava *miṭaggin*.
اتطجّن *ʔiṭṭaggin* or *ʔiṭṭaggin* /vi/ (impersonal) passive of *ṭaggin*. *ʔana miʃ min illi yiṭṭaggin maɛaahum* I'm not the type to be ordered about. - iva *miṭṭaggin*.

ط ح ل
طحال *ṭuḥaal* /n pl *-aat*/ *[anat]* spleen.

ط ح ل ب
طحلب *ṭuḥlub* /n pl *ṭaḥaalib*/ moss, lichen.

ط ح ن
طحن *ṭaḥan (a)* /vt/ to grind, mill. *baɛḍ[i] ma nnaʃʃif id-dura niṭḥan-ha dɋiiɋ* after we've dried the maize we grind it into flour. - vn *ṭaḥn, ṭiḥiin*; ava *ṭaaḥin*; pva *maṭḥuun*.
طحين *ṭiḥiin* /n/ grist. *makanit* (or *wabuur*) *ṭiḥiin* grist mill. ‖*ma-ḥadd[i]-ʃ yiɛraf yiɋlib waraa ṭḥiin [rur]* no one can outwit him.
طاحونة *ṭaḥuuna* /n pl *-aat, ṭawaḥiin*/ **1** grist mill. **2** grinder. *ṭaḥuunit bunn* coffee grinder. **3** windmill.
طحينة *ṭiḥiina* /n/ thin paste of crushed sesame seeds. *salaṭit ṭiḥiina* sauce or dip of sesame paste (with, e.g., garlic, lemon juice, parsley etc.). ‖*ɛamal il-baḥr[i] ṭḥiina* he painted a (misleadingly) rosy picture.
طحيني *ṭiḥiini* /adj/ **1** pertaining to sesame paste. ‖*ḥalaawa ṭiḥiniyya* halva. **2** beige in colour.
طحّان *ṭaḥḥaan* /n */ miller.
طحّانة *ṭaḥḥaana* /n pl *-aat*/ grinder. *ṭaḥḥaanit filfil* pepper mill.
مطحن *maṭḥan* /n pl *maṭaaḥin*/ grist mill (especially for flour).
مطحنة *maṭḥana* /n pl *maṭaaḥin*/ hand-mill, grinder. *maṭḥanit bunn* coffee grinder. ‖*lisaan-u zayy il-maṭḥana* he never stops talking.
اتطحن *ʔiṭṭaḥan* or *ʔiṭṭaḥan* /vi/ to be ground. - iva *miṭṭiḥin*.
انطحن *ʔinṭaḥan* = *ʔiṭṭaḥan*. - iva *minṭiḥin*.
طاحن *ṭaaḥin* /vt/ to struggle with. *ʔil-markib fil-baḥr[i] bi-ṭṭaaḥin il-moog* the boat is at sea battling with the waves. - vn *miṭaḥna*; ava *miṭaaḥin*.
اتطاحن *ʔiṭṭaaḥin* /vi/ to struggle (with o.a.). *ʔiṭṭaḥnu sawa* they struggled against one another, they fought each other. - ava *miṭṭaaḥin*.

ط خ خ see also ط ا خ
طخ *ṭaxx (u)* /vt/ to strike or hit loudly. *ṭaxxeet-u ɋalam* I gave him a resounding slap. ‖*ṭaxx[i] ṭalɋiteen* he fired off two shots. - *ṭaxx[i] miʃwaar* to cover a long distance unwillingly (usually on foot), as in *ʔil-ʔutubiis ma-gaa-ʃ fa-ṭaxxeet il-miʃwaar lil-beet* the bus didn't come so I had to walk all the way home. - vn *ṭaxx, ṭaxaxaan*; ava *ṭaaxix*; pva *maṭxuux*.
طخّة *ṭaxxa* /inst n, pl *-aat*/ a blow, a shot. ‖*ṭaxxit ʃams* sunstroke.

اتطخّ ʔiṭṭaxx or ʔiṭṭaxx /vi/ passive of *ṭaxx*. *ʔiṭṭaxx[i] ɛyareen fi-nafuux-u* he got shot twice in the head. -iva *miṭṭaxx*.
انطخّ ʔinṭaxx = ʔiṭṭaxx. -iva *minṭaxx*.

ط ر [1]
طرة *ṭura* /prop n/ Tura, area a little to the south of el-Ma'adi known for its quarries and prison.

ط ر [2] see ط ر ج : *ṭurgi*

ط ر ء
طرأ *ṭaraʔ (a)* /vi/ to occur unexpectedly. *ṭaraʔ ɛala baal-u* (or *ɛala xaṭr-u*) it occurred to him, it crossed his mind. *fikra ṭarʔa* a passing notion. *ʔaxxarit-u ḥaala ṭarʔa* an unexpected situation has held him up. -vn *ṭaraʔaan*; ava *ṭaariʔ*.
طارئ *ṭaariʔ* **1** /n pl *ṭawaariʔ*/ emergency. *ẓarf[i] ṭaariʔ* force majeure. **2** *ṭawaariʔ* /pl n/ state of emergency. *tamwiin iṭ-ṭawaariʔ* emergency rations. *ḥaalit ṭawaariʔ* state of emergency.

ط ر ب [1]
طرب *ṭarab[1] (i)* /vt/ to affect pleasurably with song. ‖*sayyidit iṭ-ṭarab* epithet of the singer Umm Kalthum. -vn *ṭarab*; ava *ṭaarib*.
طرب *ṭarab[2]* /n/ **1** delight or pleasure derived from singing. **2** vocal entertainment. *ʔahl iṭ-ṭarab* skilled and popular professional singers.
اتطرب ʔiṭṭarab[1] or ʔiṭṭarab[2] /vi/ passive of *ṭarab[1]*. -iva *miṭṭirib*.
أطرب ʔaṭrab[1] = *ṭarab[1]*. -vn *ʔiṭraab*; ava *muṭrib*.
مطرب *muṭrib* /n */ professional singer.

ط ر ب [2]
طرب *ṭarab[3] (i)* /vt/ to frighten. *leeh kida ṭarabt il-ɛayyil* what did you frighten the child like that for? -vn *ṭarabaan*; ava *ṭaarib*; pva *maṭruub*.
طربة *ṭarba* /inst n, pl *-aat*/ a fright. *ṭaasit iṭ-ṭarba* kind of bowl used in folk medicine cures (see *ṭaasa*).
اتطرب ʔiṭṭarab[2] or ʔiṭṭarab[3] /vi/ passive of *ṭarab[3]*. -iva *miṭṭirib*.
انطرب ʔinṭarab = ʔiṭṭarab. -iva *minṭirib*.

ط ر ب [3]
طرب *ṭarb* (also *kufta biṭ-ṭarb*) /n/ minced meat patties wrapped in fat from the belly of an animal and grilled on skewers.

ط ر ب د see ط ر ب ي د : *ṭurbiid*

ط ر ب ز see ط ر ب ي ز : *ṭarabeeza, ṭarabiiza*

ط ر ب ش [1]
طربش *ṭurubʃ* /masc and fem n, pl *-aat*/ simpleton, dullard.

ط ر ب ش [2]
طربوش *ṭarbuuʃ* <T *tarbuş* from P> /n pl *ṭarabiiʃ*/ **1** tarbush (Pl.F, 13). ‖*ṭarbuuʃ il-malik [bot]* glory tree (Cleradendron splendens). **2** any of a variety of devices used as caps or cappings, e.g., flame guide ring on a primus stove, dental crown or cap, restraining cap on the spindle of a spinning machine.
طرابيشي *ṭarabiiʃi* **1** /n pl *-yya*/ maker and seller of tarbushes. **2** /adj/ of the (red) colour of a tarbush.
اتطربش ʔiṭṭarbiʃ or ʔiṭṭarbiʃ /vi/ *[obsol]* to become a tarbush wearer, become a white-collar worker. -iva *miṭṭarbiʃ*.

ط ر ب ظ see ط ر ب ي ز : *ṭarabeeẓa*

ط ر ب ق
طبرق *ṭarbaq* /vt/ to smash, demolish. -vn *ṭarbaqa*; ava/pva *miṭarbaq*.
اتطربق ʔiṭṭarbaq or ʔiṭṭarbaq /vi/ **1** to collapse. *ḥa-ṭfiili da yiṭṭarbaq da* if you take this away that will collapse. *lamma tiṭṭarbaq is-sama ɛal-ʔarḍ* when the sky falls to the ground (i.e., never). **2** to be demolished. -ava/iva *miṭṭarbaq*.

ط ر ب ن [1] see ت ر ب ن [1]

ط ر ب ن [2] see ط ر ب ي ن : *ṭurbiin*

ط ر ب ن –
طربنطيّة *ṭarbanṭiyya* /n pl *-aat*/ caterer's portable set of tea- and coffee-making equipment.

ط ر ب ي د
طربيد *ṭurbiid* <Engl> /n pl *-aat*/ **1** torpedo. *lanʃ[i] ṭurbiid* torpedo boat. **2** fire-cracker.

ط ر ب ي ز
طرابيزة *ṭarabeeza, ṭarabiiza* (also *ṭarabeeẓa, tarabeeẓa*) <Gr *trapezi*> /n pl *-aat*/ table. *ṭarabeezit it-tawalitt* dressing table. *ṭarabeezit is-sufra* dining table.

ط ر ب ي ن
طربين *ṭurbiin* <Fr> /n pl *-aat*/ turbine.

ط ر ج

طورجي *ṭurgi* /n pl *-yya*/ middle level officiant at *zaar* ceremonies.

ط ر ح

طرح *ṭaraḥ (a)* /vt/ **1** to bear, yield (fruit, of a tree). *ʔiʃ-ʃagara ṭaraḥit talat lamunaat* the tree bore three lemons. *ʃagarit law ma-tiṭraḥ-ʃ [prov]* the 'if' tree bears no fruit. — /vi/ **2**↑ to pose, present. *ʔil-ʔasʔila l-maṭruuḥa* the questions posed. **3** to cast (a net). **4** *[math]* to subtract. - vn *ṭarḥ, ṭaraḥaan*; ava *ṭaariḥ*; pva *maṭruuḥ*.

طرح *ṭarḥ* /n/ **1** /vn/ ‖*(ʔarḍ[i]) ṭarḥ il-baḥr* alluvial land. **2** /n/ pollen (of a male palm). **3** *ʔiṭ-ṭarḥ [Jud]* the Midrash.

طرحة *ṭarḥa* /n/ **1** /inst n, pl *-aat*/ a (single) yield (of a tree, net cast etc.). **2** /pl *ṭuraḥ*/ covering or veil for a woman's head, usually a black rectangular piece of cloth (see Pl.F, 10). ‖*w-allaahi ḥ-alabbis-ak ṭarḥa* (by God, I'll make you wear a veil) ≈ I'll beat you into submission (insult or threat to a man).

طرحيّة *ṭarḥiyya* /n pl *-aat*/ **1** one season's yield (of a tree). **2** *[math]* subtraction sum.

طريحة *ṭariiḥa* /n pl *ṭaraayiḥ*/ **1** (manual) work, assignment, task. *ʃuɤl[i] biṭ-ṭariiḥa* piece-work. **2** *[slang]* a thrashing, a hiding.

طرّاحة *ṭarraaḥa* /n pl *-aat*/ cast net (for fishing).

مطرح *maṭraḥ* /n pl *maṭaariḥ*/ **1** place. *maṭraḥ il-ʕuṭn[i] nizraʕ ḥubuub il-fuul* we sow broad beans where the cotton was. *ḥuṭṭi nafs-ik maṭraḥ-i* put yourself in my place. *kull[a] ḥaaga maṭraḥ-ha* everything is in order. *ḥuṭṭ[i] rigl-ak maṭraḥ rigl is-saʕiid tisʕad [prov]* follow in the footsteps of the lucky man and you will be lucky. ‖*ma-tifrabʃ[i] maṭraḥ ḥadd* don't drink after someone else (from the same glass). **2** place, space. *ḥasab il-maṭaariḥ il-faḍya fis-siima* according to the (number of) empty places in the cinema. *gat il-ḥaziina tifraḥ ma-laʔit-ʃ[i] laha maṭraḥ [prov]* ≈ one who is born to suffer will find no opportunity to rejoice. **3**↓ room. *ʃaʔʔa b-ʃarbaʕ maṭaariḥ* a four-room flat.

¶ *maṭraḥ ma* /conj/ wherever. *maṭraḥ ma truuḥ ʔana waraak* wherever you go I will follow.

مطرحة *maṭraḥa* /n pl *maṭaariḥ*/ bat-shaped implement used in the preparation of flat bread (see Pl.B, 4).

انطرح *ʔinṭaraḥ*↑ /vi/ passive of *ṭaraḥ*. - vn *ʔinṭiraaḥ*; ava *minṭiriḥ*.

طرّح *ṭarraḥ* /vt/ **1** to use a *maṭraḥa* on (a piece of dough, to flatten it). **2** to fertilize (a female palm). - vn *taṭriiḥ*; ava/pva *miṭarraḥ*.

تطريحة *taṭriiḥa* /n pl *-aat*/ covering or veil for a woman's head = *ṭarḥa* (q.v.).

اتطرّح *ʔiṭṭarraḥ* or *ʔiṭṭarraḥ* /vi/ passive of *ṭarraḥ*. - iva *miṭṭarraḥ*.

ط ر د

طرد *ṭarad (u)* /vt/ **1** to chase away, drive away. *tuṭrud il-ḥiddaaya ʕan il-katakiit* she drives the kite away from the chicks. **2a** to evict, expel. *ʃawwil ma tkawwimit il-ʔugra ʕaleehum ṭaradt-u-hum* as soon as their rent (arrears) accumulated, I evicted them. *ʔitfaḍḍal min ɤeer maṭruud* please get out before you are thrown out! **2b** to dismiss, fire. *tawṣiyya b-ṭard-u* a recommendation for his dismissal. — /vi/ **3a** to recede, fall in level (of water). **3b** to flow quickly (of a river or sea). **4** to swarm (of bees). - vn *ṭard, ṭaradaan*; ava *ṭaarid*; pva *maṭruud*.

طرد *ṭard* /n pl *ṭuruud*/ package, parcel.

طرّاد *ṭarraad* /n pl *-aat*/ **1** *[naut]* cruiser. **2** *[agric]* attachment (usually of wood) which can be mounted above a ploughshare in order to widen the furrow.

اتطرد *ʔiṭṭarad* or *ʔiṭṭarad* /vi/ passive of *ṭarad*. - iva *miṭṭirid*.

انطرد *ʔinṭarad* = *ʔiṭṭarad*. - iva *minṭirid*.

طارد *ṭaarid* /vt/ to chase, pursue. - vn *muṭarda*↑; ava *miṭaarid, muṭaarid*↑; pva *muṭaarad*↑.

اتطارد *ʔiṭṭaarid* or *ʔiṭṭaarid* /vi/ to be chased, be pursued. - iva *miṭṭaarid*.

ط ر ر[1]

طرّة *ṭurra[1]* /n/ **1** knotted handkerchief. **2** children's game for two to four players in which the rules of the players are determined by lot (toss-up, counting-out etc.); the winner sentences the loser to a specific number of lashes with a rolled and knotted handkerchief, and designates a player to execute the sentence. **3** bundle (of hides, in the jargon of tanners).

طرّر *ṭarrar* /vt/ to roll (hides) into a bundle. - ava/pva *miṭarrar*.

اتطرّر *ʔiṭṭarrar* or *ʔiṭṭarrar* /vi/ to be rolled into a bundle (of hides). - iva *miṭṭarrar*.

ط ر ر[2]

طرّة *ṭurra[2]* <T *tura*> /n pl *ṭurar*/ **1** monogram of the Ottoman Sultan. **2** calligraphically intricate monogram in the style of that of the Ottoman Sultans. - also *ṭuɤra*.

ط ر ر[3] see ض ر ر[2]

ط ر ز

طراز *ṭiraaz* /n pl *ṭuruuz*/ **1** type, kind, class. *min*

iṭ-ṭiraaz il-ʕawwal first class. **2** style. *ṭiraaz maɣrabi* North African style.

طرّز *ṭarraz* /vt/ to embroider. -vn *taṭriiz*; ava/pva *miṭarraz*.

انطرّز *ʔinṭarraz* or *ʔiṭṭarraz* /vi/ to be embroidered. -iva *miṭṭarraz*.

ط ر ش 1

طرش *ṭaraʃ¹ (u)* /vt/ **1** to vomit. ‖*ṭaarif id-damm* giving one's utmost, as in *ḥarim-ni mil-mukafʕa maɛa ʔinn¹ ʔana lli ṭaarif id-damm¹ fiʃ-ʃuxl* he's refusing me a bonus even though I've been working myself to death. **2** *[abus]* to eat. *ɋuum ʔuṭruʃ ɛaʃaan nixsil iṭ-ṭubaaɋ* come on, gobble away so we can wash the dishes! -vn *ṭarʃ, ṭaraʃaan, ṭiraaʃ, ṭuraaʃ*; ava *ṭaariʃ*; pva *maṭruuʃ*.

طرش *ṭarʃ* /adv/ without ado, immediately. *ga min barra daxal ɛal-ʔakl¹ ṭarʃ* he came inside and before you could say Jack Robinson he was at his food.

طراش *ṭuraaʃ¹, ṭiraaʃ¹* /n/ vomit.

انطرش *ʔinṭaraʃ¹* /vi/ passive of *ṭaraʃ¹*. -iva *minṭiriʃ*.

اتطرش *ʔiṭṭaraʃ¹* = *ʔinṭaraʃ¹*. -iva *miṭṭiriʃ*.

طرّش *ṭarraʃ* /vt/ to cause to vomit. ‖*ṭarrafuu-ni d-damm* they gave me a hell of a time! -vn *taṭriiʃ*; ava *miṭarraʃ*.

اتطرّش *ʔiṭṭarraʃ* or *ʔiṭṭarraʃ* /vi/ passive of *ṭarraʃ*. -iva *miṭṭarraʃ*.

ط ر ش 2

طرش *ṭiriʃ* or *ṭuruʃ (a)* /vi/ to become deaf. *ʔana ḥaasis bi-ṭaraʃaan fi-widn-i* I feel my ear going deaf. -vn *ṭaraʃaan*; ava *ṭaariʃ*.

طرش *ṭaraʃ² (i)* /vt/ to deafen. *ṭaraʃt-i-ni bi-gɛiir-ak* you've deafened me with your bellowing. -ava *ṭaariʃ*.

طرش *ṭaraʃ³* /n/ deafness.

أطرش *ʔaṭraʃ* /adj, fem *ṭarʃa*, pl *ṭurʃ*/ deaf. *zayy il-ʔaṭraʃ fiz-zaffa* (like a deaf man at a wedding celebration) completely unaware of what is going on. ‖*rigl-u ṭɋiila w-ṭarʃa* he has a deadly kick (of a man). - *ʔiid-u ṭarʃa* he packs a punch.

طراش *ṭiraaʃ², ṭuraaʃ²* /n/ deafness. *ma-fii-ʃ ḥaaga b-balaaʃ ʔilla l-ɛama wiṭ-ṭuraaʃ [prov]* nothing is free except blindness and deafness.

اتطرش *ʔiṭṭaraʃ²* or *ʔiṭṭaraʃ²* /vi/ to be deafened. -iva *miṭṭiriʃ*.

انطرش *ʔinṭaraʃ² = ṭiriʃ*. -ava *minṭiriʃ*.

اطرش *ʔiṭraʃʃ = ṭiriʃ*. -ava *miṭraʃʃ*.

ط ر ش 3

طرش *ṭaraʃ⁴ (u)* /vt/ to knock down. *ṭaraʃit-ni ɛal-ʔarḍ* she knocked me to the ground. -vn *ṭaraʃ, ṭaraʃaan*; ava *ṭaariʃ*; pva *maṭruuʃ*.

اتطرش *ʔiṭṭaraʃ³* or *ʔiṭṭaraʃ³* /vi/ to be knocked down. -iva *miṭṭiriʃ*.

انطرش *ʔinṭaraʃ³ = ʔiṭṭaraʃ³*. -iva *minṭiriʃ*.

ط ر ش 4

طرشي *ṭurʃi* <P *turshî*> /coll n/ pickle(s). *mayyit ṭurʃi* pickle liquid (drunk by some as an appetizer).

طرشجي *ṭurʃagi* /n pl *-yya*/ pickle maker and vendor.

ط ر ش 5

طرش *ṭurʃ* <Engl> /n/ torch, flashlight.

ط ر ش 6 see ط ر ي ش : *ṭireeʃa, ṭureeʃa*

ط ر ش ق

طرشق *ṭarʃaɋ* **1** /vt/ to explode, burst. *ṭarʃaɋit-lu l-balloona* she burst his balloon. **2** /vi/ to explode, burst. ‖*ʔil-waaḥid ḥa-yṭarʃaɋ* one could go crazy (with frustration), it's enough to drive one crazy. -vn *ṭarʃaɋa*; ava/pva *miṭarʃaɋ*.

اتطرشق *ʔiṭṭarʃaɋ* or *ʔiṭṭarʃaɋ* /vi/ to be exploded, be burst. -vn *iṭṭarʃiiɋ*; iva *miṭṭarʃaɋ*.

ط ر ط

طورطة *ṭurṭa* <It *torta*> /n pl *-aat, turat*/ large fancy cake. -also *turta*.

ط ر ط ر 1

طرطر *ṭarṭar¹* /vt/ **1** to raise (e.g., ears, head, finger). *saaɛit ma ʃaaf il-ʔakl¹ ṭarṭar widaan-u* as soon as he saw the food he pricked up his ears. **2** to put to the trouble of coming from a distance. *ʔeeh illi ṭarṭar-ak is-saaɛa di* what made you take the trouble of coming at this hour? **3** to cut the blossom top off (maize stalks after pollination). -also *ṭarṭaf*. -vn *ṭarṭara*; ava/pva *miṭarṭar*.

طرطور *ṭarṭuur* **1** /n pl *ṭaraṭiir*/ conical cap such as is worn by a clown. ‖*huwwa faahim ʔinni ḥ-axaaf min ṭarṭuur-u* ≈ does he imagine I will be awed by his pomposity? -*(zayy) iṭ-ṭarṭuur* having no say in one's own affairs. **2** /adj invar/ good-for-nothing, useless. *da raagil ṭarṭuur ma-tḍayyaɛ-ʃ¹ waɋt-ak maɛaa* the man's a dead loss; don't waste your time on him!

طرطورة *ṭarṭuura* /n pl *ṭaraṭiir*/ blossom end (of a maize stalk). -also *ṭarṭuufa*.

ط ر ط ر 2

طرطر *ṭarṭar²* /vi/ *[slang]* to urinate from a standing position (of a man). -vn *ṭarṭara*; ava *miṭarṭar*.

اتطرطر *ʔiṭṭarṭar* or *ṭiṭṭarṭar* /vi/ (impersonal) passive of

ṭarṭar[2]. *baqa da makaan yiṭṭarṭar fii* is this a place to piss in?! - iva *miṭṭarṭar*.

ط ر ط ش

طرطش *ṭarṭaf* /vt/ **1** to splash, spatter. **2** *[constr]* to roughcast (a wall). - vn *ṭarṭaša*; ava/pva *miṭarṭaf*.

طرطشة *ṭarṭaša* /n pl *ṭaraṭiif*/ a splash. ‖ *ṭaraṭiif kalaam* rumours, bits of (incomplete and uncertain) information. *fii ṭaraṭiif kalaam ʔinnak ḥa-titraqqa* there are rumours that you will be promoted.

انطرطش *ʔiṭṭarṭaf* or *ʔiṭṭarṭaf* /vi/ to be splashed, be spattered. - iva *miṭṭarṭaf*.

ط ر ط ف

طرطف *ṭarṭaf* /vt/ to cut the blossom end off (maize stalks after pollination). - also *ṭarṭar*. - vn *ṭarṭafa*; ava/pva *miṭarṭaf*.

طرطوفة *ṭarṭuufa* /n pl *ṭaraṭiif*/ **1** end, tip. *ɛala ṭaraṭiif iṣ-ṣawaabiɛ* on tiptoe. ‖ *baṣṣ-i-li min ṭaraṭiif manaxiir-u* he looked down his nose at me. **2** (also *tantuufa*) small (redundant) projection. **3** (also *ṭarṭuura*) blossom end (of a maize stalk).

انطرطف *ʔiṭṭarṭaf* or *ʔiṭṭarṭaf* /vi/ **1** to project, hang out. *ʔil-mandiil miṭṭarṭaf min geeb-ak* the handkerchief is sticking out of your pocket. **2** to stand or be at the extreme end. *tilaaqi bet-hum miṭṭarṭaf barra l-balad* you find their house there at the outskirts of the village. **3** passive of *ṭarṭaf*. - ava/iva *miṭṭarṭaf*.

ط ر ط ق

طرطق *ṭarṭaq* /vt/ to prick up (one's ears). *widaan-u mṭarṭaqa* he's all ears. - vn *ṭarṭaqa*; ava/pva *miṭarṭaq*.

انطرطق *ʔiṭṭarṭaq* or *ʔiṭṭarṭaq* /vi/ to be pricked up (of ears). - iva *miṭṭarṭaq*.

ط ر ف [1]

طرف *ṭarf, ṭaraf*[1] /n pl *ṭuruuf, ʔaṭraaf*/ tip, end, extremity (particularly of the body). *ṭarf il-manaxiir* tip of the nose. *ʔik-kilma kaanit ɛala ṭarf*[i] *lsaan-i* the word was on the tip of my tongue. ‖ *zaɛal-u ɛala ṭarf*[i] *manaxiir-u* he's extremely short-tempered. - *ḥadd*[i] *das-lak ɛala ṭarf* has anyone done something to upset you?

طرفاني *ṭarfaani* /adj */ extreme, furthermost. *ɛayziin niqɛud taḥt if-famsiyya ṭ-ṭarfaniyya* we want to sit under the sunshade that is at the very end.

طرف *ṭaraf*[2] /n pl *ʔaṭraaf*/ party (to a dispute, contract etc.). *ḥubb*[i] *min ṭaraf waaḥid* one-sided love. ‖ *min ṭaraf* (1) on the part of, as in *ʔibɛat ḥadd*[i] *min ṭaraf-i yfuuf il-ɛaruusa* send someone on my part to see the bride. (2) with the recommendation of, as in *hiyya l-ʔaanisa min ṭaraf-ak* does the young lady have your recommendation? - *ʔixlaaʔ* (or *xuluww*[i]) *ṭaraf* official written statement of clearance of an employee's responsibility to a former employer, certificate of discharge.

اتطرّف *ʔiṭṭarraf* or *ʔiṭṭarraf* /vi/ **1** to be situated at the far end or extreme edge (of s.th.). **2** to go to extremes. *ʔiwɛa titṭarraf tiigi hina* don't you ever dare come here! - vn *taṭarruf*↑; ava *miṭṭarraf, mutaṭarrif*↑.

تطرّف *taṭarruf*↑ /n/ extremism.

متطرّف *mutaṭarrif*↑ **1** /n */ extremist. **2** /adj */ extreme. *yasaari mutaṭarrif* an extreme leftist.

ط ر ف [2]

طريف *ṭariif* /adj pl *ṭuraaf, ṭurafa*/ delightful, uncommonly pleasant.

أطرف *ʔaṭraf* /el/ more/most delightful.

ط ر ف [3]

طرف *ṭaraf*[3] *(i, u)* **1** /vi/ to blink. *ʔit-tiɛbaan ma-yiṭrif-ʃ*[i] *b-ɛeen-u ɛaʃaan ma-ɛanduu-ʃ gufuun* a snake cannot blink its eyes because it has no eyelids. ‖ *xallaa-ni baqeet qaaɛid miʃ qaadir ʔaṭrif* he kept me (so attentive that I stared) without batting an eye. **2** /vt/ to touch or brush (the eye) in a painful way. *ḥaasib - ṭaraft*[i] *ɛeen-i* careful! you hurt my eye. - vn *ṭarafaan, ṭarfa*; ava *ṭaarif*; pva *maṭruuf*.

اتطرف *ʔiṭṭaraf* or *ʔiṭṭaraf* /vi/ passive of *ṭaraf*[3]. - iva *miṭṭirif*.

انطرف *ʔinṭaraf* = *ʔiṭṭaraf*. - iva *minṭirif*.

ط ر ق

طرق *ṭaraq*↑ *(u)* /vt/ to knock, strike, pound, hammer. *miin bi-yuṭruq il-baab is-saɛaa-di* who is knocking at the door at this hour? - vn *ṭarq*; ava *ṭaariq*; pva *maṭruuq*.

طرقة *ṭarqa* /inst n, pl *-aat*/ a knock.

طرقة *ṭurqa* /n pl *ṭuraq, ṭurqaat*/ corridor, passage. *barra ṭ-ṭurqa [naut]* off course.

طريق *ṭariiq* /masc and fem n, pl *ṭuruq, ṭuruqaat*/ **1** road. *ṭariiq ɛumuumi* a main road. *ṭariiq maṣr iskindiriyya* the Cairo-Alexandria road. **2** route, way. *xayyar ṭariiq-u* he altered his course. *ɛarraf-u ṭariiq kinz*[i] *fil-ʔarḍ* he told him the way to a buried treasure. *geena ɛan ṭariiq is-suuq* we came via the market. *ʔil-ɛadwa b-tiigi ɛan ṭariiq il-ʔakl* the infection is carried through food. *biṭ-ṭariiq ir-rasmi* through official channels. ‖ *ʔaaxir ṭariiq-ak feen* what are you driving at?

طريقة *ṭariiqa, ṭariiqa* /n pl *ṭuruq*/ **1** way, procedure, method. *ʔiṭ-ṭuruq id-difaɛiyya* defence tactics. *bi-ʔayy*[i] *ṭariiqa* (1) by any means. (2) by what means? *di miʃ ṭariiqa di* that's no way to do things! **2** Sufi Order, Sufi

brotherhood. *kull[i] ʃeex wi-lu ţariiqa [prov]* ≈ everyone has his own way of doing things.
مطرقة *maţraqa* /n pl *maţaariq*/ any one-handed hammer with a blunt head (such as a sledge hammer or a farrier's rounding hammer).
اتطرق *ʔitţaraq* or *ʔiţţaraq* /vi/ to be knocked, struck, pounded or hammered. - iva *miţţiriq*.
طرّق *ţarraq* /vt/ **1** to forge (metal). *ʔil-ħaddaad bi-yţarraq il-faas* the blacksmith forges the mattock. **2** to show (s.o.) the way out. - vn *taţriiq*; ava/pva *miţarraq*.
اتطرّق *ʔitţarraq* or *ʔiţţarraq* /vi/ **1** to be forged (of metal). **2** to be shown the way out. **3** to push off, shove off. *ʔiţţarraq* get lost! - ava/iva *miţţarraq*.

ط ر ق ع
طرقع *ţarqaɛ* **1** /vt/ to cause to make a cracking sound. *ţarqaɛ ʂawabɛ-u* he cracked his knuckles. *ţarqaɛ il-kurbaag* he cracked the whip. — /vi/ **2** to crack, make a cracking, clicking or banging sound. **3** to burst (of a tyre etc.). ‖*baqeet ħ-aţarqaɛ min il-ɣeez* I was about to explode with anger. - vn *ţarqaɛa*; ava/pva *miţarqaɛ*.
طرقيعة *ţurqeeɛa* /n pl *-aat*/ child's toy clicker, (loosely also) any plaything that cracks.
اتطرقع *ʔitţarqaɛ* or *ʔiţţarqaɛ* /vi/ to be cracked. - iva *miţţarqaɛ*.

ط ر ل م
طرلم *ţaralam* onomatopoeia for the sound of music ≈ tra-la-la. - also *taralam*.

ط ر ل ى
طورلى *ţurli* <T *türlü*> /n/ mixed vegetables stewed in sauce. - also *turli, tulli*.

[1] ط ر م
طرم *ţirim (a)* /vi/ to lose one's (front) teeth.
طرم *ţaram (u)* /vt/ **1** to cause (s.o.) the loss of his (front) teeth. **2** to thrust, jab. *ţaramit ʂubaɛ-ha f-ɛeen-i* she poked her finger in my eye. - vn *ţarm, ţaramaan*; ava *ţaarim*; pva *maţruum*.
أطرم *ʔaţram* /adj, fem *ţarma*, pl *ţurm*/ having no front teeth.
اتطرم *ʔitţaram* or *ʔiţţaram* /vi/ passive of *ţaram*. - iva *miţţirim*.
انطرم *ʔinţaram* = *ʔitţaram*. - iva *minţirim*.
طرّم *ţarram* /vt/ to knock out (teeth). - vn *taţriim*; ava/pva *miţarram*.
اتطرّم *ʔitţarram* or *ʔiţţarram* /vi/ to be knocked out (of teeth). - iva *miţţarram*.

[2] ط ر م
طارمة *ţarma* /n pl *-aat*/ *[naut]* quarters for crew aft in a Nile sailing boat.

ط ر م ب
طرمبة *ţurumba* <It *tromba*> /n pl *-aat*/ pump. ‖*ţurumbit baab* hydraulic door-operating device. *-ţurumba kawitʃ* rubber drain plunger. *-ţurumba mariina [naut]* voice-pipe. - also *turumba, ţulumba*.

[1] ط ر م ب –
طرمبيطة *ţurumbeeţa* <T *trampete*> /n pl *-aat*/ *[mil]* side drum. - also *turumbeeţa*.
طرمبيطجى *ţurumbeţgi* /n pl *-yya*/ *[mil]* side drummer. - also *turumbeţgi*.

[2] ط ر م ب – see ء ت ر م – : *ţurumbiil*

ط ر م خ
طرمخ *ţarmax* /vt/ to do in a slapdash manner. - vn *ţarmaxa*; ava/pva *miţarmax*.
اتطرمخ *ʔitţarmax* or *ʔiţţarmax* /vi/ to be done in a slapdash manner. - iva *miţţarmax*.

ط ر ن ا ط
طرناطة *ţurnaaţa, ţurunaaţa* (also *ţurneeţa*) <It *tonnellata*> /n pl *ţaraniit*/ (metric) ton, tonne. ‖*ʔil-fuluus biţ-ţurnaaţa* money is plentiful.

ط ر ن ش
طرانش *ţaranʃ* <Fr *tranche*> /n pl *-aat*/ **1** slice. **2** *[elec]* channel made in a wall for the installation of wiring.

ط ر ن ط see ط ر ن ا ط : *ţurnaaţa, ţurunaaţa, ţurneeţa*

ط ر ن ى ط see ط ر ن ا ط : *ţurneeţa*

ط ر و see [1] ط ر ى : *ţaraawa*

[1] ط ر ى
طرى *ţiri, ţuri (a)* /vi/ **1** to become soft or pliant. **2** to become cool or refreshing (of weather). **3** to lose sharpness (of a blade). - vn *ţaraawa*.
طراوة *ţaraawa* **1** /vn/ ‖*ħagar ţaraawa* (1) whetstone. (2) grindstone (for marble, alabaster etc.). — /n/ **2** coolness, cool weather. ‖*xad ţaraawa* he caught a chill. *- ma-mɛaa-ʃ iţ-ţaraawa [non-Cairene]* he's penniless. *- xallii-k fiţ-ţaraawa* forget about it! **3** softness.

ʕiid-u fiiha ṭaraawa he has fleshy hands.

طرى *ṭari* /adj pl *ṭuraay, ṭiraay*/ **1** soft, flexible. *kawitf*^{i} *ṭari* flexible rubber. *mubilyaat ṭariyya* soft-upholstered furniture. ‖*ʕaḍm-u ṭari* he's a softie, he's still wet behind the ears. **2a** fresh and tender. *ʕeef ṭari* fresh bread. *garḥ*^{i} *ṭari* fresh wound. **2b** fresh and succulent. *figl*^{i} *ṭari* fresh and juicy radishes. **2c** unripe, green. *xaʃab ṭari* unseasoned wood. **3** cool, refreshing. *nisma ṭariyya* a refreshing breeze. **4** moist, damp. *ʕil-ɣasiil lissa ṭari* the laundry is still damp. *buuya ṭariyya* wet paint.

أطرى *ʕaṭra* /el/ **1** more/most soft. **2** more/most fresh or tender. **3** more/most cool or refreshing. **4** more/most moist or damp.

طرّى *ṭarra* /vt/ **1** to soften, make pliant. **2** to dampen, moisten. *niṭarri ʃwayyit raml* we moisten a little sand. *ṭarra riiq-u b-ʃaay* he wet his whistle with tea. **3** to cool, make fresh. *ma-tḫuṭṭ il-baṭṭiixa fit-tallaaga ṭarrii-ha* put the water-melon in the refrigerator to chill it. ‖*ṭarra (ʕala) l-ʕalb* to soothe, refresh (s.o.), as in *niṭarri ʕala ʕalb-i-na b-ḫaaga saʕʕa* let's cool off with a cold drink. — /vi/ **4** to become cool or fresh (of weather). - vn *taṭriyya*; ava/pva *miṭarri*.

اتطرّى *ʔiṭṭarra* or *ʔiṭṭarra* /vi/ passive of *ṭarra*. - iva *miṭṭarri*.

استطرى *ʔistaṭra* /vt/ **1** to select for tenderness, coolness or softness. **2** to consider (too) tender, cool or soft. - ava *mistaṭri*.

ط ر ى ²

طورية *ṭurya* <Copt> /n pl *ṭawaari*/ kind of mattock, medium-sized *faas* (see Pl.D, 6).

ط ر ى ش

طريشة *ṭireeʃa, ṭureeʃa* /n/ horned viper.

ط ز ز

طزّ *ṭuzz* (also *ṭuzẓ*) /interj/ so what! so who gives a damn! ‖*ṭuzz*^{i} *fiff* the hell with it! - *ṭuzz*^{i} *fi-...* to hell with..., as in *ṭuzz*^{i} *fiik* to hell with you! - *wala tiʕraf ṭuzz*^{i} *min subḥaan allaah* ≈ she can't tell chalk from cheese.

ط ز ز ي ن

طزّينة *ṭuzziina, ṭazziina* <It *dozzina*> /n pl *-aat, ṭazaziin*/ dozen. *biṭ-ṭuzziina* by the dozen, in great quantity. - also *duzziina*.

ط س س

طسّ *ṭass* (also *ṭaṣṣ*) *(u)* /vt/ to smite, strike. *ṭass-i-ni muxalfa* he slapped a fine on me. *ʕil-hawa yṭuss-a-ha* the wind buffets it. *ʕin ʃa-lla yṭuss-ak turmaay* I hope you get run down by a tram! - vn *ṭass, ṭasasaan*; ava *ṭaasis*; pva *maṭsuus*.

طسّة *ṭassa* /n pl *-aat*/ instance noun of *ṭass*.

اتطسّ *ʔiṭṭass* or *ʔiṭṭass* (also *ʔiṭṭaṣṣ* or *ʔiṭṭaṣṣ*) /vi/ **1** to crash, smash. *ḫa-yiṭṭass*^{i} *fil-ḫeeṭa* he'll smash into the wall! **2** to be smitten, be struck. *yiṭṭass*^{i} *f-naẓar-u* may he be struck blind! *ʔiṭṭasseet fi-naẓar-ak* have you been blinded, have you lost all sense of discrimination? - ava/iva *miṭṭass*.

انطسّ *ʔinṭass* (also *ʔinṭaṣṣ*) = *ʔiṭṭass*. - ava/iva *minṭass*.

ط س ط س

طسطس *ṭasṭas* /vi/ to play music badly. *ʕaʕad yiṭasṭas wi-ynaffiz* he went on playing lousy music. - vn *ṭasṭasa*; ava *miṭasṭis*.

ط ش ت

طشت *ṭift* (also *ṭift*) <P *tasht*> **1** /n pl *ṭufuut, ṭifaat, ʔiṭfaaṭ, ṭufúta*/ large shallow metal or plastic basin used for laundry and bathing (see Pl.A, 9). *ʔiṭ-ṭift*^{i} *ʕaal lil-maxrafa ya buuṣa ya mʕaṣʕaṣa [prov]* ≈ the pot called the kettle black. **2** oaf, dolt.

طشتيّة *ṭiftiyya* (also *ṭiftiyya*) /n pl *-aat, ṭafaati*/ *[rur]* small deep metal basin.

ط ش ش

طشّ *ṭaff (u, i)* /vt/ **1** to cause (hot fat) to sizzle by the addition of liquid. *nuruuḫ ḫaṭṭiin ʃiwayyit diʕiiʕ bis-samna wi-nṭuff-a-ha bil-laban* we put in a little flour with clarified butter and (after heating them together we add) milk so that it sizzles. **2** *[metal]* to temper by quenching. **3** *[rur]* to irrigate (land) prior to planting. **4** to rupture (the amniotic sac before birth). *ʔig-gamuusa ṭaffit il-ʕarn* ≈ the buffalo is about to deliver its calf. — /vi/ **5** to rupture (of the amniotic sac at birth). - vn *ṭaff, ṭafafaan*; ava *ṭaafif*; pva *maṭfuuf*.

طشاش *ṭafaaf* **1** /n/ dimness, blurredness. *miʃ faayif ʕuddaami veer ṭafaaf* all I can see in front of me is a blur. ‖*ṭafaaf kalaam* unfounded information, rumours. - *ʔiṭ-ṭafaaf wala l-ʕama [prov]* better weak-sighted than blind. **2** /adv/ dimly, sparsely. *bi-yfuuf ṭafaaf* he can see only dimly. ‖*b-aʕraf ʔingiliizi ṭafaaf* I have a smattering of English.

اتطشّ *ʔiṭṭaff* or *ʔiṭṭaff* /vi/ passive of *ṭaff*. - iva *miṭṭaff*.

ط ش ط see ط ش ت : *ṭift*

ط ش ط ش

طشطش *ṭaṭṭaf* /vi/ to sizzle, splash (of hot oil, at the

addition of liquids). - vn *ṭaftafa*; ava *miṭaftaf*.

ط ص ص see ط س س: *ṭaṣṣ, ʔiṭṭaṣṣ, ʔinṭaṣṣ*

ط ص ل ق

طصلق *ṭaṣlaq* <T *taslak*> /vt/ to carry out (work) in a hasty slapdash manner. - also *ṭalṣaq*. - vn *ṭaṣlaqa*; ava/pva *miṭaṣlaq*.

اتطصلق *ʔiṭṭaṣlaq* or *ʔiṭṭaṣlaq* /vi/ to be done in a hasty slapdash manner. - iva *miṭṭaṣlaq*.

ط ط و ر

ططورة *ṭaṭuura* /coll n/ *[bot]* datura. - also *datuura, dahtuura, tatuura*.

ط ط ى

طاطا *ṭaaṭa* (also *ṭaʔṭaʔ*) **1** /vt/ to bow or lower (one's head). **2** /vi/ to bow to circumstances. *ṭaṭi-lha tfuut [prov]* acquiesce in (evil) circumstances and they will pass. - vn *miṭaṭiyya*; ava/pva *miṭaaṭi*.

ط ظ ظ see ط ز ز: *ṭuẓẓ*

ط ع م

طعم *ṭaʕam (i)* /vt/ **1** to make tasty or flavoursome. *ḥuṭṭi l-kammuun ʕal-xuḍaar ʕafaan yiṭʕim-u* put some cumin in the vegetables to give them taste. **2** *[frozen contexts]* to feed. *ʔiṭʕim il-fumm[i] tistiḥi l-ʕeen [prov]* give and you'll get results. *ʔiṭʕim maṭʕuum wala tiṭʕim-f[i] maḥruum [prov]* help the one who once saw better days (because he feels deprivation more) rather than one who has always been poor. **3** *[hort]* to graft. - vn *ṭaʕm, ṭaʕamaan*; ava *ṭaaʕim*; pva *maṭʕuum*.

طعم *ṭaʕm* /n/ **1** taste, flavour. ‖*kalaam ma-lu-f ṭaʕm* uninspiring talk. **2** *[hort]* graft.

طعميّة *ṭaʕmiyya* /coll n/ common dish consisting of dried broad beans soaked and pounded together with herbs and spices, shaped into balls and deep fried in oil. *ṭaʕmiyya mafruuda* disc-shaped *ṭaʕmiyya*. *ṭaʕmiyya ṣammaaṭi* finger-shaped *ṭaʕmiyya*. *ṭaʕmiyya maḥʃiyya* a sort of *ṭaʕmiyya* stuffed with onion and parsley.

طعمجى *ṭaʕmagi* /n pl *-yya*/ maker of *ṭaʕmiyya*.

طعم *ṭuʕm* /coll n/ **1** bait. **2** *[hort]* graft(s). *maṭwit ṭuʕm* grafting knife. **3** vaccine.

طعمة *ṭuʕma* /unit n, pl *-aat*/ **1** piece of bait. **2** *[hort]* a graft.

طعماية *ṭuʕmaaya* = *ṭuʕma*.

طعم *ṭiʕim* /adj */ **1** tasty, flavour-some. **2** cute, sweet.

أطعم *ʔaṭʕam[1]* /el/ **1** more/most tasty or flavoursome. **2** more/most cute or sweet.

طعام *ṭaʕaam* /n pl *ʔaṭʕima*/ food. *ʃirkit il-ʔaṭʕima l-maḥfuuẓa* the canned-foods company.

مطعم *maṭʕam* /n pl *maṭaaʕim*/ **1** restaurant. **2** refectory.

مطعمجى *maṭʕamgi*↓ /n pl *-yya*/ restaurant owner.

طعّم *ṭaʕʕam* /vt/ **1** to inoculate, vaccinate. **2** to inlay. ‖*ṭaʕʕim il-kalaam* studding one's speech (with attractive verbal devices). **3** *[hort]* to graft. *ṭaʕʕim ʕeen* shield-budding. - vn *ṭaʕʕim*; ava/pva *miṭaʕʕam*.

اتطعّم *ʔiṭṭaʕʕam* or *ʔiṭṭaʕʕam* /vi/ **1** to be inoculated, be vaccinated. **2** to be inlaid. **3** to be grafted. - iva *miṭṭaʕʕam*.

أطعم *ʔaṭʕam[2]*↑ /vt/ to feed, give to eat. *ʔiṭʕaam il-fuqara f-ramaḍaan ḥalaal* it's good to feed the poor in Ramadan. - vn *ʔiṭʕaam*; ava *miṭʕim, muṭʕim*.

استطعم *ʔistaṭʕam* /vt/ **1** to find tasty, savour (food). **2** to detect the taste of. *ʔana mistaṭʕam malḥ[i] fil-ʔakl* I can taste salt in the food. - vn *ʔistiṭʕaam*; ava *mistaṭʕam*.

ط ع ن

طعن *ṭaʕan (a)* /vt/ **1a** to stab. **1b** to defame, cast aspersions on. *ṭaʕanit-ni f-faraf-i* she has wounded my honour. **2** *[leg]* to contest (a sentence). - vn *ṭaʕn*; ava *ṭaaʕin*; pva *maṭʕuun*.

طعن *ṭaʕn* /n pl *ṭuʕuun*/ *[leg]* appeal.

طعنة *ṭaʕna* /inst n, pl *-aat*/ **1** a stab, a thrust with a knife. **2** an act of defamation.

طاعون *ṭaʕuun* /n/ plague, pestilence.

اتطعن *ʔiṭṭaʕan* or *ʔiṭṭaʕan* /vi/ passive of *ṭaʕan*. - iva *miṭṭiʕin*.

ط غ ر

طغرة *ṭuɣra* /n pl *-aat*/ **1** monogram of the Ottoman Sultan. **2** calligraphically intricate monogram in the style of that of the Ottoman Sultans. - also *ṭurra*.

طغراء *ṭuɣaraaʔ*↑ = *ṭuɣra*.

ط غ ى

طغى *ṭaɣa (a, i)* /vi/ **1** to have dominance, predominate. *ʔil-manṭiqa di bi-yiṭɣa ʕaleeha ṭ-ṭaabiʕ il-yunaani* this area has a predominantly Greek stamp. **2** to behave domineeringly, play the despot. *hiyya b-tiṭɣa ʕala ʔaxuu-ha ṣ-ṣuɣayyar* she dominates her little brother. - vn *ṭaɣayaan*; ava *ṭaaɣi*.

طاغية *ṭaɣya* /n pl *ṭuɣaah*/ despot, tyrant.

طغيان *ṭuɣyaan* /n/ despotism, tyranny.

اتطغى *ʔiṭṭaɣa* or *ʔiṭṭaɣa* /vi/ (impersonal) passive of *ṭaɣa*. *ʔana miʃ min illi b-yiṭṭiɣi ʕaleehum* I'm not the sort to be bossed around. - iva *miṭṭiɣi*.

ط ف ء see ط ف ى

ط ف ح

طفح *ṭafaḥ (a)* /vi/ **1** to overflow, spill over. *ʕaḥyaanan il-magaari tiṭfaḥ* sometimes the sewers overflow. ‖*gild-u ṭafaḥ* his skin erupted (in a rash). — /vt/ **2** to vomit, bring up. ‖*ṭafaḥ ik-kuuta* (or *ʕid-damm*) he worked himself to exhaustion. **3** *[abus]* to eat. *ʕiṭfaḥ* eat! (and I hope you choke). - vn *ṭafḥ, ṭafaḥaan*; ava *ṭaafiḥ, ṭafḥaan*; pva *maṭfuuḥ*.

طفح *ṭafḥ* /n/ *[path]* rash.

طفّح *ṭaffaḥ* /vt/ **1** to cause to overflow. **2** to cause to vomit. ‖*ḥ-aṭaffaḥ-ak ik-kuuta* I'll make you sweat blood! **3** to force to eat. ‖*ḥ-aṭaffaḥ-ak is-simm* ≈ I'll make life hell for you! - vn *taṭfiiḥ*; ava/pva *miṭaffaḥ*.

اتطفّح *ʕiṭṭaffaḥ* or *ʕiṭṭaffaḥ* /vi/ passive of *ṭaffaḥ*. - iva *miṭṭaffaḥ*.

ط ف ر [1]

طفر *ṭafar[1] (u)* /vi/ to jump, rise suddenly. *ʕil-ʕasɣaar ṭafarit bi-fakl[i] ʁariib* prices jumped up amazingly. - vn *ṭafaraan*; ava *ṭaafir*.

طفرة *ṭafra* /n pl *-aat*/ a leap, a jump.

ط ف ر [2]

طفر *ṭafar[2]* /n pl *ʕaṭfaar*/ crupper, rump (of a horse).

ط ف س

طفس *ṭifis* /adj */ **1** greedy, gluttonous. **2** unpleasant, horrible. *ʕil-ɣaya ṭ-ṭifis lii ʕid-dawa n-nigis [prov]* a nasty disease requires a foul medicine.

أطفس *ʔaṭfas* /el/ **1** more/most greedy or gluttonous. **2** more/most unpleasant.

طفاسة *ṭafaasa* /n/ **1** greediness, gluttony. **2** unpleasantness.

اتطافس *ʕiṭṭaafis* or *ʕiṭṭaafis* /vi/ to behave in a nasty way, act unpleasantly. - ava *miṭṭaafis*.

ط ف ش

طفش *ṭifiʃ, ṭafaʃ (a)* /vi/ to run away, flee. *ṭiffit min ǧoz-ha* she ran away from her husband. *da-na ɣawza ʕaṭfaʃ min xilaq-kum* I'd like to get away from your ugly mugs! - vn *ṭafaʃaan*; ava *ṭaafiʃ, ṭaffaan*.

طفّاشة *ṭaffaaʃa* /n pl *-aat*/ picklock, tool for forcing a lock.

طفّش *ṭaffiʃ* /vt/ **1** to cause to flee, drive away. *fakl[i] yṭaffiʃ* a repellent face. **2** to force open (a lock). - vn *taṭfiiʃ*; ava *miṭaffiʃ*.

اتطفّش *ʕiṭṭaffiʃ* or *ʕiṭṭaffiʃ* /vi/ **1** to be caused to flee. **2** to be picked (of a lock). - iva *miṭṭaffiʃ*.

ط ف ط ف

طفطف *ṭaftaf* /n pl *ṭafaaṭif*/ open-sided bus, often horse-drawn, used in resorts.

ط ف ف [1]

طفّ *ṭaff (u)* /vi/ to gush out. *ʕil-mayya ṭaffit mil-magaari* water burst out from the drains. - vn *ṭaff, ṭafafaan*; ava *ṭaafif*.

طفّة *ṭaffa[1]* /n pl *-aat, ṭufaf*/ instance noun of *ṭaff*.

ط ف ف [2]

طفّة *ṭaffa[2]* /n pl *-aat*/ group (usually as part of a procession). *faatu ɛaleena ṭaffa wara ṭaffa* they passed by us group after group. - also *ḍaffa*.

طفّة *ṭaffa[3]* /n/ double number (e.g., in dice or dominoes). - also *ḍaffa*.

طفيف *ṭafiif↑* /adj/ trivial, inconsiderable, trifling.

ط ف ل [1]

طفل *ṭifl* /n pl *ʕaṭfaal*/ baby (boy), infant, child. *ʕaṭfaal il-madaaris* school-children. *ʕil-ʕaṭfaal ʕaḥbaab allaah [prov]* (children are the beloved of God) ≈ children are innocent.

طفلة *ṭifla* /n pl *ʕaṭfaal*/ baby girl, little girl.

طفولة *ṭufuula* /n/ infancy, childhood.

ط ف ل [2]

طفيلى *ṭufeeli* /n pl *-yya*/ sponger.

طفيلى *ṭufayli↑* /adj/ parasitical.

طفيليّات *ṭufayliyyaat* /pl n/ parasites.

اتطفّل *ʕiṭṭaffal* or *ʕiṭṭaffal* /vi/ to sponge, impose oneself. - vn *taṭafful*; ava *miṭṭaffal, mutaṭaffil*.

ط ف ل [3]

طفل *ṭafl* /n/ clay, especially potter's clay.

طفلة *ṭafla* = *ṭafl*.

طفّل *ṭaffil* /vi/ to harden (of land with a surface of silt). - vn *taṭfiil*; ava *miṭaffil*.

ط ف و

طفا *ṭafa[1]↑ (u)* /vi/ to float, be buoyant. - vn *ṭafw*; ava *ṭaafi*.

ط ف ى

طفى *ṭafa[2] (i)* /vt/ **1** to extinguish, put out, turn off (fire, light, radio etc.). *ʕiṭfi n-nuur* turn off the light. **2** to render dull, lustreless or muted, give a matt finish to. *loon maṭfi* muted colour. **3a** to irrigate, water (parched ground). **3b** to hydrate. *giir maṭfi* slaked lime. **3c** to quench (hot metal). — /vi/ **4** to go out, become dead (of

a fire, light, engine etc.). - vn *ṭafy, ṭafayaan*; ava *ṭaafi*; pva *maṭfi*.

طفية *ṭafya*[1] /pl *-aat*/ **1** instance noun of *ṭafy*. **2** (also *ṭafyit sigaara*) cigarette ash.

طفّاية *ṭaffaaya* /n pl *-aat*/ **1** fire-extinguisher. **2** ashtray.

مطافى *maṭaafi* /pl n/ fire department, fire-brigade. *ʿaskari maṭaafi* fireman. *ʿarabiyyaat maṭaafi* fire-engines.

اتطفى *ʔiṭṭafa* or *ʔiṭṭafa* /vi/ passive of *ṭafa*[2]. - iva *miṭṭifi*.

انطفى *ʔinṭafa* = *ʔiṭṭafa*. - iva *minṭifi*.

طفّى *ṭaffa*[4] = *ṭafa*[2]. - vn *ṭaṭfiyya*; ava/pva *miṭaffi*.

اتطفّى *ʔiṭṭaffa* or *ʔiṭṭaffa* = *ʔiṭṭafa*. - iva *miṭṭaffi*.

إطفاء *ʔiṭfaaʔ*↑ /n/ fire-fighting. *ʔidaarit il-ʔiṭfaaʔ* or *ʿism il-ʔiṭfaaʔ* fire department, fire-brigade. *ʿarabiyyit il-ʔiṭfaaʔ* fire-engine.

ط ف ى ا

طافيا *ṭafya*[2] /n/ mixed dregs of alcohol, particularly methylated spirits (drunk by down-and-outs etc.).

ط ق س [1]

طقس *ṭaqs, ṭaqsʔ* <Gr *taksis*> /n/ **1** weather, climate. **2** /pl *ṭuquus, ṭuquus*/ rite, ritual. ‖*nafs iṭ-ṭaqs*[i] *huwwa huwwa* it's the same thing all over again.

طقسى *ṭaqsi, ṭaqsiʔ* /adj/ ritual, liturgical.

طقّس *ṭaqqas*[1] /vt/ *[Chr]* to ordain according to prescribed ritual. *ṭaqqasu l-baṭrak* they enthroned the patriarch according to the ritual. - vn *taṭqiis*; ava/pva *miṭaqqas*.

اتطقّس *ʔiṭṭaqqas* or *ʔiṭṭaqqas* /vi/ passive of *ṭaqqas*[1]. - iva *miṭṭaqqas*.

ط ق س [2]

طقّس *ṭaqqas*[2] /vi/ to make a thorough search, search everywhere. *ṭaqqas fiṭ-faqqa ʿala naḍḍart-u* he searched the whole flat for his glasses. - vn *taṭqiis*; ava/pva *miṭaqqas*.

ط ق س [3] see ط ق ق ى س : *ṭuqqeesi*

ط ق ش

طقش *ṭaqaf (u)* /vt/ to hit (s.th. against s.th. else). *ṭaqaf rus-hum fi-baʿḍ* he cracked their heads together. - vn *ṭaqf, ṭaqafaan*; ava *ṭaaqif*; pva *maṭquuf*.

طقاش *ṭiqaaf* /n/ quarterstaff fencing.

اتطقش *ʔiṭṭaqaf* or *ʔiṭṭaqaf* /vi/ passive of *ṭaqaf*. - iva *miṭṭiqif*.

طقّش *ṭaqqaf* /vt/ **1** = *ṭaqaf*. **2** to break, smash (e.g., eggs, melons). *ṭaqqafii-li beḍteen fiz-zibda* fry me a couple of eggs in butter. ‖*ʿeen-u mṭaqqafa* his eye is puffy and red. - vn *taṭqiif*; ava/pva *miṭaqqaf*.

اتطقّش *ʔiṭṭaqqaf* or *ʔiṭṭaqqaf* /vi/ passive of *ṭaqqaf*. - iva *miṭṭaqqaf*.

ط ق ط ق

طقطق *ṭaqṭaq*[1] /vt/ **1a** to cause to make a clicking or cracking sound. *ṭaqṭaq ṣawabʿ-u* he cracked his knuckles. ‖*qaaʿid yiṭaqṭaq ṣawaabiʿ riglee* he's sitting around twiddling his thumbs. **1b** to cause to crack. *ʔil-ḥarr*[i] *bi-yṭaqṭaq il-ʔarḍ* the heat cracks the earth. **2** *[slang]* to make aware and alert, give polish to. *ʔil-waad da ʿaawiz fiwayyit ṭaqṭaqa* that kid needs smartening up. ‖*ṭaqṭaq widaan-u* he pricked up his ears. — /vi/ **3** to make a cracking sound. *ʔil-buks*[i] *ṭaqṭaq fi-wiff-u* the punch exploded in his face. ‖*qalb-i bi-yṭaqṭaq* my heart is palpitating. - vn *ṭaqṭaqa*; ava/pva *miṭaqṭaq*.

مطقطق *miṭaqṭaq* /pva/ ‖*ḥabl*[i] *mṭaqṭaq* a rope, some of the strands of which have snapped.

طقطق *ṭaqṭaq*[2]*: min ṭaqṭaq li-salaamu ʿaleekum* (I know) the whole story.

طقطوقة *ṭaqṭuuqa* /n pl *ṭaqaṭiiq*/ **1** ashtray. **2** small occasional table. **3** form of popular song consisting of couplets sung by a soloist alternating with a choral refrain. **4** a fart.

طقاطيق *ṭaqaṭiiq* /pl n/: *min (taḥt*[i]*) ṭaqaṭiiq il-ʔarḍ* from the depths of the earth.

طقطيقة *ṭuqṭeeqa* /n pl *-aat, ṭaqaṭiiq*/ **1** child's toy clicker. **2** *[non-Cairene]* motor-cycle.

اتطقطق *ʔiṭṭaqṭaq* or *ʔiṭṭaqṭaq* /vi/ passive of *ṭaqṭaq*. - iva *miṭṭaqṭaq*.

ط ق ق [1]

طقّ *ṭaqq (u, a)* /vi/ **1** to burst, crack (open). *niḍiif ʿal-ʔasmant*[i] *raml*[a] *ʿaṣaan ma-yṭaqq*[i]*-ṣ* we add sand to the cement so that it won't crack. ‖*nafuux-ak ṭaqq* you're cracked, your mind has cracked. - *miskuu w-ʿamaluu-lu ṭaqq il-fils* they grabbed him and gave him a beating on the arse. **2** to crack, make a cracking noise. *ʔiṭ-ṭabanga ṭaqqit* the revolver went off with a crack. ‖*ṭaqqit mil-xeeẓ* she exploded with anger. - *min barra ṭaqq*[i] *ṭaqq*[i] *w-min guwwa faaf wi-baqq [prov]* (outside rustling (of fine clothes), inside mites and bugs) ≈ all that glisters is not gold. -vn *ṭaqq, ṭaqaqaan*; ava *ṭaaqiq*.

طقّق *ṭaqqaq* /vt/ to cause to burst. ‖*ṭaqqaqit-ni* she drove me insane. - vn *taṭqiiq*; ava/pva *miṭaqqaq*.

اتطقّق *ʔiṭṭaqqaq* or *ʔiṭṭaqqaq* /vi/ passive of *ṭaqqaq*. - iva *miṭṭaqqaq*.

ط ق ق ²
طقّة *ṭaqqa* /n pl *-aat*/ meal. *fi-kull[i] ṭaqqa ʕiḥmidu rabb-i-na* at every meal praise God.

ط ق ق ي س
طقّيسى *ṭuqqeesi* /n/ *[rur]* small window in a mud dwelling.

ط ق م
طقم *ṭaqam (u)* /vt and vi/ to take hold (particularly with the teeth). *ʕik-kalb[i] ṭaqam (fi-)rigl-i* the dog sank his teeth into my leg. - vn *ṭaqam, ṭaqamaan*; ava *ṭaaqim*; pva *maṭquum*.
طقم *ṭaqm* /n pl *ʕaṭqum, ʕuṭqum, ṭuqúma[4]*/ **1** set of complementary things. *ṭaqm[i] sufra* dinner service. *ṭaqm[i] ʃaay* tea set. *ṭaqm[i] snaan* set of teeth. *ṭaqm[i] ḥmaar* donkey tack. **2** complementary group of people, team, troupe. *ṭaqm[i] il-markib* ship's crew. **3** litter (of young animals).
انطقم *ʔinṭaqam* /vi/ (impersonal) passive of *ṭaqam*. *ʔinṭaqam fi-rigl-u* he got his leg bitten. - iva *minṭiqim*.
طقّم *ṭaqqam* /vt/ **1** to fit out with a complete set of clothes. **2** *[naut]* to make up a crew. *markib miṭaqqama* ship with crew. **3** to enable to take hold of, put into the clutches of. *ṭaqqam-ni l-mablaʁ bass* just let me get my hands on the money. - vn *taṭqiim*; ava/pva *miṭaqqam*.
اتطقّم *ʔiṭṭaqqam* or *ʔiṭṭaqqam* /vi/ passive of *ṭaqqam*. - iva *miṭṭaqqam*.

ط ق ى see ¹ط و ق : *ṭaqiyya*

ط ل ب
طلب *ṭalab[1] (u)* /vt/ **1** to request, order. *ṭalabtu ʃaay walla ʁahwa* did you order tea or coffee? *da l-maṭluub* that's just the ticket! ‖ *ʃana ḥ-aṭlub-huu-lak* I'll get him (on the phone) for you. **2** to demand. *ʔiṭ-ṭalab ʁaleehum fidiid* they are much in demand. **3** to request the hand of (s.o.) in marriage. ‖*ṭalabuu-ha tʁazzizit fatuu-ha tnaddimit [prov]* she coyly refused offers of marriage only to regret when marriage passed her by. **4** to require. *law il-ḥaraara zaadit ʁan il-maṭluub* if the temperature exceeds the required level. *bi-yuṭlubu ʃhaada* they require a certificate. **5** *[mil]* to call up, draft. - vn *ṭalab*; ava *ṭaalib*; pva *maṭluub*.
طلب *ṭalab[2]* /n pl *-aat*/ **1a** request, order. *taḥt iṭ-ṭalab* (available) on demand. *ḥasab iṭ-ṭalab* (made) to order. ‖*ṭalabaat-ak* ≈ at your service. **1b** application. *ṭalab gawaaz (safar)* passport application. **2** demand. *qanuun il-ʁarḍ[i] wiṭ-ṭalab* the law of supply and demand. **3** requirement. *ṭalabaat il-beet* household necessities. ‖*raaḥ fi-ṭalab* he went on an errand.
طالب *ṭaalib[1]* /n pl *ṭullaab, ṭalaba*/ (male) student. *beet iṭ-ṭalaba* students' hostel.
طالبة *ṭalba[f], ṭaaliba↑* **1** /n pl *-aat*/ female student. **2** /fem adj/ in heat. *faraṣa ṭalba* a mare in heat.
طلبة *ṭalba[2]* /n pl *ṭalabaat*/ *[Chr]* supplication, litany.
مطلوبات *maṭlubaat↑* /pl n/ requirements.
طلبة *ṭulba* /n/ *[mil]* fatigue duty.
طلبيّة *ṭalabiyya* /n pl *-aat, -aat*/ order, requisition, commission. *xad ṭalabiyyaat farʃ* he took orders for furniture.
اتطلب *ʔiṭṭalab* or *ʔiṭṭalab* /vi/ passive of *ṭalab*. - iva *miṭṭilib*.
انطلب *ʔinṭalab* = *ʔiṭṭalab*. - iva *minṭilib*.
اتطلّب *ʔiṭṭallab* or *ʔiṭṭallab* /vt/ to require, necessitate. - vn *taṭallub*; ava *mutaṭallib↑*; pva *mutaṭallab↑*.
متطلّبات *mutaṭallabaat↑, mutaṭallabaat↑* /pl n/ requirements.
طالب *ṭaalib[2]* /vt/ to make a demand of (s.o.), make a claim on (s.o.). *ʔil-ʁummaal bi-yṭalbu f-ʃirka b-ḥuquq-hum* the workers are demanding their rights from the company. *ʔin-niyaaba bi-ṭṭaalib bi-ʔaʃadd[a] ʁuquuba* the prosecution is calling for the heaviest penalty. - vn *miṭalba, muṭalba*; ava *miṭaalib*; pva *muṭaalaḅ*.
اتطالب *ʔiṭṭaalib* or *ʔiṭṭaalib* /vi/ passive of *ṭaalib[2]*. - iva *miṭṭaalib*.

ط ل ح
طلح *ṭalḥ* /n/ acacia.

¹ط ل س
طلس *ṭalas (u, i)* /vi/ to close over or stop up (an aperture) with mud or the like. *ṭalasit ʁala buqq il-ballaaṣ wi-sabiṭ-u lamma l-miff[i] daar* she stopped up the mouth of the pot (with mud) and left it till the *miff* had aged. - vn *ṭals*; ava *ṭaalis*; pva *maṭluus*.
اتطلس *ʔiṭṭalas* or *ʔiṭṭalas* /vi/ (impersonal) passive of *ṭalas*. *yiṭṭilis ʁalee b-ḥittit ṭiina* it is covered over with a lump of mud. - iva *miṭṭilis*.

²ط ل س see ط ى ل س : *ṭaylasaan*

¹ط ل س م
طلسم *ṭalsim* **1** /vt/ to jam, make unworkable. **2** /vi/ to jam fast. *ʔil-baab ṭalsim* the door jammed. *muxx-i miṭalsim* my mind has seized up (usually from exhaustion). - vn *ṭalsama*; ava/pva *miṭalsim*.
اتطلسم *ʔiṭṭalsim* or *ʔiṭṭalsim* /vi/ to be or become jammed or unworkable. - ava/iva *miṭṭalsim*.

ط ل س م ²

طلسم *ṭalsam* **1** /n pl *ṭalaasim*/ talisman, charm. **2** *ṭalaasim* /pl n/ cryptic symbols.

ط ل ص ق

طلصق *ṭalṣaq* /vt/ to carry out (work) in a hasty slapdash manner. - also *ṭaṣlaq*. - vn *ṭalṣaqa*; ava/pva *miṭalṣaq*.

اتطلصق *ʔiṭṭalṣaq* or *ʔiṭṭalṣaq* /vi/ to be done in a hasty slapdash manner. - iva *miṭṭalṣaq*.

ط ل ط م ى س

طلطميس *ṭalṭamiis* /n/ *[magic]* formulaic word uttered in calling up spirits.

ط ل ع

طلع *ṭiliʕ, ṭalaʕ (a)* /vi/ **1** to proceed, come or go forth. *ṭiliʕna riḥla* we went off on a trip. *yalla niṭlaʕ (ʕala) il-haram* let's go to the Pyramids! *ʔil-ḥaramiyya ṭilʕu ʕalayya* the thieves came at me. *ʃaariʕ ṭaaliʕ min il-midaan* a street leading off the square. *ṭiliʕ yigri* he set off at a run. **2** to come out, go out, get out. *ḥa-yiṭlaʕ mis-sign[i] baʕd[i] sana* he'll get out of prison in a year's time. *ṭiliʕ min is-sabaq* he dropped out of the race. ‖*ṭiliʕ min hiduum-u* ≈ he blew up (in, e.g., anger or exasperation). - *diin-u ṭiliʕ* or *ʕeen-u ṭilʕit* (1) he became thoroughly fed up. (2) he had a very hard time of it. - *rooḥ-u ṭilʕit* (1) he died. (2) he became exasperated. **3** to appear, emerge. *ʔil-ward[i] ṭiliʕ* the flowers began to bloom. *ʔil-baṭṭiix ṭiliʕ* water-melon has come into season. *ʔiʃ-ʃams[i] ṭilʕit* (1) the sun rose. (2) the sun came out. *ʔimta n-natiiga ḥa-tiṭlaʕ* when will the result come out? *ʔir-ruxṣa ṭilʕit* the licence was issued. *ṭiliʕ bi-ḥigga gdiida* he's come up with a new excuse. ‖*ṭaaliʕ fik-kaar* he's new to the trade. - *ʔiṭlaʕ biiha* out with it! **4** to come out, come off, come away. *ʔil-ʔukra ṭilʕit fi-ʔiid-i* the handle came away in my hand. *ʔil-ʔiʃra b-tiṭlaʕ min kutr ir-ruṭuuba* the veneer comes off because of excess damp. *ʔil-buʔaʕ ḥa-tiṭlaʕ bi-mayya suxna* the stains will come out with hot water. **5** to ascend, go up. *ʔiṭ-ṭayyaara ṭilʕit* (1) the plane took off. (2) the plane gained altitude. *ʔiṭlaʕ fooʔ is-suṭuuḥ* go up to the roof! *ḥa-niṭlaʕ bi-doreen kamaan* we'll add two more storeys. ‖*la ṭiliʕ wala nizil* ≈ he doesn't amount to anything, he's a nobody. - *tiṭlaʕ is-sama tinzil il-ʔarḍ ...* ≈ whatever you do ..., as in *tiṭlaʕ is-sama tinzil il-ʔarḍ[i] miʃ mumkin ḥa-taxud-ha* whatever you do you'll never get it. - *ṭaaliʕ waakil naazil waakil (zayy il-munfaar)* ≈ he doesn't miss a single opportunity. - *ʔil-fikra ṭilʕit fi-dmaav-i* the idea appealed to me. **6a** to grow up (to be), become. *ṭiliʕt[i] min ṣuvr-i mʕaqqad* I grew up with a complex. *ḥa-tiṭlaʕ ʔeeh lamma tikbar* what will you be when you grow up? **6b** to turn out (to be), prove (to be). *ṭiliʕ kazzaab* he proved to be a liar. *ṭiliʕ boof* it turned out a flop. *ṭiliʕ bi-kaam* how much did it cost in the end? *ʔilli maʕaaya ma-yiṭlaʕ-ʃ[i] ʕafara gneeh* what I have with me doesn't amount to ten pounds. ‖*yiṭlaʕ* approximately, as in *maʕaaya yiṭlaʕ ʕafara gneeh* I have about ten pounds. — /vt/ **7a** to climb, ascend. *ṭiliʕ is-sillim* he climbed the stairs. **7b** to board, mount. *ṭiliʕt il-ʔutubiis* I boarded the bus. - vn *ṭuluuʕ*; ava *ṭaaliʕ, ṭalʕaan*; pva *maṭluuʕ*.

¶ *ṭiliʕ li-* to take after, as in *ʔibn-u ṭiliʕ-lu* his son took after him. — *ṭiliʕ ʕala* to suit, as in *ʔil-fustaan da ma-b-yiṭlaʕ-ʃ[i] ʕaleeha* that dress doesn't suit her. - *ṭiliʕ fi-* to take up, acquire as a habit, as in *ṭilʕit fi-ḥkaaya gdiida* she is up to something new, she took up a new (bad) habit, *ṭaaliʕ fiiha* he is putting on airs, *ṭiliʕ fi-maṭluuʕ taani* now he's up to something different.

طالع *ṭaaliʕ[1]* **1** /ava/ ‖*wi-ṭaaliʕ* and upwards, and onwards, as in *min hina w-ṭaaliʕ* from now on, *ʕafar siniin wi-ṭaaliʕ* ten years and up. **2** /n pl *ṭawaaliʕ*/ horoscope.

مطلوع *maṭluuʕ* /n pl *maṭaliiʕ*/ craze, fad. *luhum maṭaliiʕ ɣariiba* they come up with crazy new ideas.

طلع *ṭalʕ* /n/ **1** *[text]* lapping of cotton hanks before weaving. **2a** pollen. **2b** inflorescence (of a palm tree).

طلعة *ṭalʕa* /n/ **1** appearance, emergence. *ṭalʕit iʃ-ʃams* sunrise. *ṭalʕit in-nahaar* daybreak. **2** sortie, expedition, outing. ‖*badlit iṭ-ṭalʕa [mil]* dress uniform. **3** countenance. *geet bi-ṭalʕit-ak il-bahiyya [deris]* ≈ there you are in all your beauty. **4** funeral procession.

طليعة *ṭaliiʕa*↑ /n pl *ṭalaayiʕ*/ vanguard.

طليعى *ṭaliiʕi* /adj */ avant-garde. ‖*ʔit-tanẓiim iṭ-ṭaliiʕi [obsol]* secret organisation in the time of President Nasser charged with ascertaining and shaping opinions among the population.

مطلع *maṭlaʕ* /n pl *maṭaaliʕ*/ **1** upward slope. **2** first line of a poem or song. **3** overture.

مطلاع *miṭlaaʕ* /n pl *maṭaliiʕ*/ climbing strap with which a climber circles the palm tree and his waist.

طلّع *ṭallaʕ* /vt/ **1** to send out. *ṭallaʕuu-hum min il-balad* get them out of the country! **2** to take out, get out. *ṭallaʕ ʔiid-ak min geeb-ak* take your hand out of your pocket! *ṭallaʕt-i-lu sgaara* I proffered him a cigarette. ‖*ḥ-aṭallaʕ ʕeen-u* (or *diin-u*, or *rooḥ-u*) I'll give him a very hard time. **3** to issue, release. *bi-yṭallaʕu l-magalla kull[i] ʔusbuuʕ* they publish the magazine every week. ‖*ṭallaʕ ɣaḍab-u fiiha* he took out his anger on her. - *ṭallaʕ (kalaam) ʕala* to invent and spread (defamatory) rumours about (s.o.), as in *ṭallaʕ ʕaleena ʔinn iḥna gubana* he spread it around that we were cowards.

4 to produce. *ʕil-beeḍ ṭallaɛ katakiit* the eggs produced chicks. *ʕaḥsan ward*^{i} *yṭallaɛ riiḥa huwwa l-ward il-baladi* the flowers that produce the best scent are roses. **5** to detach, remove. *laazim tiṭallaɛ kull iṣ-ṣamɣ*^{i} *min ʕiid-ak* you have to get all the glue off your hands. **6** to acquire, obtain. *ṭallaɛ ruxṣa* he got a licence. *bi-ṭṭallaɛ kaam gineeh fiṭ-ṭahr* how much money do you make in a month? **7** to take, bring or send up. *ṭallaɛit il-ɣasiil ɛala s-suṭuuḥ* she took the washing up to the roof. *bi-nṭallaɛ mayya min il-biir* we get water up from the well. **8** to turn (s.o. or s.th.) into. *siib-u bass*^{i} *maɛaana w-ḥa-nṭallaɛ-huu-lak walad maẓbuuṭ* just leave him with us and we'll make a fine boy out of him. **9** to make (s.o. or s.th.) out (to be). *ṭallaɛuu-ni kaddaab* they made me out a liar. - vn *taṭliiɛ*; ava/pva *miṭallaɛ*.

اتطلّع ʕiṭṭallaɛ or ʕiṭṭallaɛ /vi/ **1** passive of *ṭallaɛ*. **2** to look. *bi-tiṭṭallaɛ li-ʕeeh* what are you looking at? **3** to aspire. *ʕana miʃ miṭṭallaɛ lit-tarqiyya* I don't aspire to promotion. - ava/iva *miṭṭallaɛ*.

طالع *ṭaaliɛ*^{2} /vt/ to peruse, study. *kutub muṭaliɛa* (school) books (of selections from Arabic prose writers) for study. - vn *muṭaliɛa*; ava *miṭaaliɛ*.

اطّلع ʕiṭṭalaɛ /vi/ **1** to be (well) informed, be knowledgeable. *ʕil-muḥaami laazim yiṭṭiliɛ kitiir wi-ytaabiɛ il-qanuun* a lawyer must be well-read and keep up (to date) with the law. **2** to refer (to written material). *ʕil-muwaẓẓaf bi-yiṭṭiliɛ ɛala l-mustanadaat* the employee consults the documents. - vn *ʕiṭṭilaaɛ*; ava *miṭṭiliɛ*.

مطّلع *muṭṭaliɛ* /adj */ well-informed, knowledgeable.

استطلع ʕistaṭlaɛ /vt/ **1**↑ to look into, scrutinize. *ḥa-nistaṭlaɛ il-mawḍuuɛ* we'll look into the matter. ‖ *ḥubb il-istiṭlaaɛ* curiosity. **2** *[mil]* to make a reconnaissance of. *ʕistaṭlaɛu l-ʕahdaaf* they reconnoitred the targets. - vn *ʕistiṭlaaɛ*; ava *mistaṭlaɛ*.

ط ل ق

طلق *ṭalaq (i, u)* /vt/ **1a** to release, set loose. *ʕiṭliq il-kalb*^{a} *ɛalee* set the dog loose on him! *ṭalaqna l-bahaayim taakul il-ḥafiif* we let the cattle out to eat the grass. *ʕiṭliq il-mayya fig-gineena* let the water flow into the garden. **1b** to discharge, fire (a projectile). **2** to mate with (of a male animal). - /vi/ **3** to have uterine contractions, have labour pains. - vn *ṭalq, ṭalaqaan*; ava *ṭaaliq*; pva *maṭluuq*.

طلق *ṭalq* **1** (also *ṭalq*) /adj/: *ʕil-hawa ṭ-ṭalq* the open air. **2** /coll n/ labour pains, uterine contractions.

طلقة *ṭalqa*^{1} /pl *-aat*/ **1** /inst n/ **1a** a uterine contraction (in childbirth). **1b** a shot. *ḍarab ṭalqa* he fired a shot. **1c** single declaration of divorce. **2** bullet, shell, projectile.

طالق *ṭaaliq* /fem adj */ divorced.

طالقة *ṭalqa*^{2} = *ṭaaliq*.

طلاق *ṭalaaq* /n/ divorce. *ʕiṭ-ṭalaaq bit-talaata [Isl]* irrevocable divorce.

طلوقة *ṭaluuqa* /n pl *-aat*/ stud animal.

طليق *ṭaliiq* **1** /n pl *ṭulaqa*/ ex-husband. **2** /adj */ free. *ḥurr*^{i} *ṭaliiq* as free as the wind.

طليقة *ṭaliiqa* /n w foll pron, pl *-aat*/ divorcee. *ṭaliqt-u* his ex-wife.

انطلق *ʕinṭalaq* /vi/ **1** to set off. *ʕinṭalaqt*^{i} *waraa* I went in pursuit of him. **2a** to release, be released. **2b** to be fired, be discharged (of a projectile). **2c** to be set loose for mating purposes (of a stud animal). - vn *ʕinṭilaaq*; ava/iva *minṭiliq*.

انطلاقة *ʕinṭilaaqa* /n pl *-aat*/ **1** instance noun of *ʕinṭilaaq*. **2** *[mech]* length of throw setting in machine-tools. **3** *[mech]* period of time in which a machine works on a particular setting.

اتطلق *ʕiṭṭalaq* or *ʕiṭṭalaq* = *ʕinṭalaq*. - ava/iva *miṭṭiliq*.

طلّق *ṭallaq* /vt/ to divorce. - vn *taṭliiq*; ava/pva *miṭallaq*.

مطلّقة *muṭallaqa*↑ /n pl *-aat*/ divorcee.

اتطلّق *ʕiṭṭallaq* or *ʕiṭṭallaq* /vi/ to be divorced. - iva *miṭṭallaq*.

أطلق *ʔaṭlaq, ʔaṭlaq* /vt/ **1a** to release, set loose. **1b** to discharge, fire (a projectile). *waqf*^{i} *ʔiṭlaaq in-naar* cease-fire. **2** to give (a name). *ʔaṭlaqu ɛalee ʔism*^{i} *gdiid* they called him by a new name. - vn *ʔiṭlaaq, ʔiṭlaaq*; ava *miṭliq, muṭliq*; pva *muṭlaq, muṭlaq*.

إطلاق *ʔiṭlaaq* /vn/ ‖ *ɛala l-ʔiṭlaaq* absolutely, at all (in negative contexts). *ma-ʃuft-uu-ʃ ɛala l-ʔiṭlaaq* I haven't seen him at all.

¶ *ʔiṭlaaqan*↑ /adv/ absolutely (not), (not) at all. *ma-b-niḥtag-uu-ʃ ʔiṭlaaqan* we don't need it at all. *ma-baɛat-ʃ*^{i} *gawabaat* - *ʔiṭlaaqan* 'Hasn't he sent any letters?' 'None at all.'

مطلق *muṭlaq*↑ /adj/ absolute. *ʔil-ḥukm il-muṭlaq* absolute rule. *ʔaɣlabiyya muṭlaqa* an absolute majority. ‖ *ḥabs*^{i} *muṭlaq [leg]* detention for a period of unspecified length.

¶ *muṭlaqan*↑ (1) /adv always w neg/ (not) at all, absolutely (not). (2) /interj/ certainly not! absolutely not!

ط ل ل

طلّ *ṭall (u)* /vi/ **1** to project, protrude. *maḥfaẓt-u ṭalla min geeb-u* his wallet is sticking out of his pocket. **2a** to look (from an elevated position). *ṭallit min iʃ-ʃibbaak* she looked out of the window. **2b** to command a view. *ʕoòḍit in-noom bi-ṭull*^{a} *ɛala l-gineena* the bedroom overlooks the garden. - vn *ṭall, ṭalalaan*; ava *ṭaalil*.

¶ *ṭall[a] ɛala* to visit, drop in on (e.g., a sick person). *ɋabl[i] ma truuḥ il-yeeṭ tiṭull[a] ɛala ʃumm-a-ha* before going to the field she drops in on her mother.
طلّة *ṭalla[1]* /inst n, pl *-aat*/ a look, a glance.
اتطلّ *ʃiṭṭall* or *ʃiṭṭall* /vi/ (impersonal) passive of *ṭall*. *bi-yiṭṭall[a] ɛalee kull[i] saaɛa* someone looks in on him every hour. -iva *miṭṭall*.

ط ل م ب
طلمبة *ṭulumba* <It *tromba* cf also T *tulumba*> /n pl *-aat*/ pump. -also *turumba, ṭurumba*.
طلمبجى *ṭulumbagi* <T *tulumbacı*> /n pl *-yya*/ pump operator.

ط ل م س
طلمس *ṭalmas* /vi/ 1 to turn dark. *ʃid-dinya ṭalmasit* (1) the sky darkened. (2) everything turned black (to my eyes). 2 /vt/ to ruin, wreck. -vn *ṭalmasa*; ava/pva *miṭalmis*.
اتطلمس *ʃiṭṭalmas* or *ʃiṭṭalmas* /vi/ to be ruined, be wrecked. -iva *miṭṭalmas*.

ط ل و ش
طالوش *ṭaluuf* /n pl *ṭawaliif*/ plasterer's hawk.

ط ل و ن
طالون *ṭaluun: ɛala ɋalb-a-ha li-ṭaluun* seeing it through to the bitter end.

ط ل ى
طلى *ṭala[1] (i)* /vt/ 1 to plate, overlay (metal). *ʃin-naḥaas maṭli b-dahab* the brass is gold-plated. 2↑ to paint. -vn *ṭaly, ṭila, ṭalayaan*; ava *ṭaali*; pva *maṭli*.
طلا، طلاء *ṭila, ṭala[2]* /n/ metallic plating. ‖*ɛalee ʃiṭ-ṭala* (usually derisive) it stands out (in a group). *yaɛni-nta lli ɛaleek iṭ-ṭala* ≈ the kettle calls the pot black.
طلّا، طلاء *ṭalla[2]* /n pl *ṭallayiin*/ one who plates or overlays metal.
انطلى *ʃinṭala* /vi/ to be plated, be overlaid (of metal). -iva *minṭili*.
¶ *ʃinṭala ɛala* to take in, fool. *ma-ɛadit-ʃ[i] tinṭili ɛala ḥadd* it doesn't fool anyone any longer.
اتطلى *ʃiṭṭala* or *ʃiṭṭala* = *ʃinṭala*. -iva *miṭṭili*.

ط ل ى ان
طليان *ṭalyaan* (also *talyaan*) <It> /coll n/ Italians.
طليانى *ṭalyaani, ṭulyaani* (also *talyaani*) /pl *ṭalayna, talayna*/ 1 /adj/ Italian. 2 /n/ an Italian. — /n, no pl/ 3 the Italian language.

ط م ا ط م
طماطم *ṭamaaṭim* /coll n/ tomato(es).
طماطة *ṭamaṭma* /unit n, pl *-aat*/ a tomato.
طماطماية *ṭamaṭmaaya* = *ṭamaṭma*.

ط م ء ن see also ط م ن
اطمأن *ʃiṭmaʃann↑* /vi/ to gain peace of mind. -vn *ʃiṭmiʃnaan*; ava *muṭmaʃinn*.

ط م ب ا ك
طمباك *ṭumbaak* <perh Gr *toumpeki*> /n/ type of finely cut tobacco, wrapped in a broad leaf, for smoking in a *ʃiiʃa*. -also *tumbaak, timbaak*.

ط م ب ر see ط ن ب ر

ط م ب ش see ط ن ب و ش

ط م ح
طموح *ṭumuuḥ↑* /n/ ambition.

ط م ر
طمار *ṭumaar* <P *tîmâr*> /n pl *-aat*/ curry-comb.
طمّر *ṭammar* /vt/ to take care of, attend to (animals, especially horses). -vn *ṭaṭmiir*; ava/pva *miṭammar*.
اتطمّر *ʃiṭṭammar* or *ʃiṭṭammar* /vi/ to be taken care of, be attended to (of animals, especially horses). -iva *miṭṭammar*.

ط م س
طمس *ṭamas (u)* /vt/ to efface, blot out. *ṭams il-ḥaɋiiɋa* the obliteration of the truth. -vn *ṭams, ṭamasaan*; ava *ṭaamis*; pva *maṭmuus*.
اتطمس *ʃiṭṭamas* or *ʃiṭṭamas* /vi/ to be effaced or blotted out. -iva *miṭṭimis*.
انطمس *ʃinṭamas* = *ʃiṭṭamas*. -vn *ʃinṭimaas*; iva *minṭimis*.

ط م ش
طمش *ṭamaʃ* /n/ *[abus]* countenance. *dahya f-ṭamaʃ-u* to hell with his ugly mug!

ط م ط م see ط م ا ط م: *ṭamaaṭim, ṭamaṭma, ṭamaṭmaaya*

ط م ع
طمع *ṭimiɛ, ṭumuɛ (a)* /vi/ to become covetous or greedy. *ʃin ṭimiɛ niddii-lu xamsa gneeh taani* if he gets greedy we'll give him five pounds more. *ʃana ṭamɛaan*

fi-ɛarabiyya zayy[i] ɛarabiyt-u I covet a car like his. - vn *ṭamaɛ*; ava *ṭaamiɛ, ṭamɛaan*.
طمع *ṭamaɛ* /n/ greed. ‖*ʕiṭ-ṭamaɛ yiqill[i] ma gamaɛ [prov]* ≈ covetousness profiteth little.
طمعة *ṭamɛa* /n/ greediness.
أطماع *ʔaṭmaaɛ↑* /pl n/ ambitions.
طمعانجي *ṭamɛangi* /n pl *-yya*/ covetous or greedy man. *ṭamɛangi banaa-lu beet falasangi sikin-lu fii [prov]* (a greedy man built a house and a bankrupt man lived in it for him) the rewards of greed are minimal.
طمّاع *ṭammaaɛ* /adj */ covetous, greedy.
طمّع *ṭammaɛ* /vt/ **1** to cause to become covetous or greedy. *miraat-u ṭammaɛit-u f-faqqa kbiira* his wife made him covet a big apartment. **2** to encourage to take advantage. *ʕinta lli ṭammaɛt-u fiik* it is you who caused him to try to make use of you. - vn *taṭmiiɛ*; ava/pva *miṭammaɛ*.
اتطمّع *ʕiṭṭammaɛ* or *ʕiṭṭammaɛ* /vi/ passive of *ṭammaɛ*. - iva *miṭṭammaɛ*.

ط م م
طمّ *ṭamm (u)* /vi/ to be overwhelming (of a disaster). - vn *ṭamm*; ava *ṭaamim*.
طامّة *ṭamma[1]* /n pl *-aat*/ (overwhelming) calamity.
طمّة *ṭamma[2]: ɛala ṭammit ɛeen-u* (full) to the brim. - also *tamma*.
اتطمّ *ʕiṭṭamm* or *ʕiṭṭamm* = *ṭamm*. - ava *miṭṭamm*.

ط م ن see also ط م ء ن
طمّن *ṭammin* /vt/ to reassure, set (someone's) mind at rest. *ya rabb[i] ṭammin-ni ɛalee* Lord, set my mind at rest about him! - vn *taṭmiin*; ava/pva *miṭammin*.
اتطمّن *ʕiṭṭammin* or *ʕiṭṭammin* /vi/ to be reassured, have one's mind set at rest. *ʕiṭṭamminu ɛaʃ-ʃaqqa* set your minds at rest about the flat. *ʕana miṭṭammin-lu* I feel comfortable about him, I have no qualms about him. - iva *miṭṭammin*.
اسطمنّ *ʕisṭimann↓* /vi/ to feel reassured. - ava *misṭiminn*.

ط م ى
طمى *ṭamy* <Copt> /n/ silt, alluvium.
طمية *ṭamya* /n/ **1** = *ṭamy*. **2** variety or type of *ṭamy*. ‖*maxluuq min ṭamyit il-ʔabariiq* (created from pitcher clay) stupid.

ط ن ا ش ى
طناشى *ṭanaaʃi* <Gr> /prop n/ *[deris]* (nickname for) Athanasios, traditional name for a (Greek) cotton merchant.

ط ن ب
طنب *ṭanab↓ (u, i)* /vi/ to appeal. *da raagil kariim - ṭanabna ɛalee qaḍa-lna maṣlaḥit-na* he's a generous man - we appealed to him and he saw to the business for us. - vn *ṭanab, ṭanabaan*; ava *ṭaanib*.
اتطنب *ʕiṭṭanab* or *ʕiṭṭanab* /vi/ (impersonal) passive of *ṭanab*. *ʕiṭṭanab ɛalee* his assistance was sought. - iva *miṭṭinib*.
أطنب *ʔaṭnab↑* /vi/ to be long-winded. - vn *ʕiṭnaab*; ava *muṭnib*.

ط ن ب ر [1]
طنبر *ṭambar* /vt/ to fill as full as possible. *mala ʃ-ʃiwaal wi-ṭambar-u* he filled the sack till it would hold no more. - vn *ṭambara*; ava/pva *miṭambar*.
اتطنبر *ʕiṭṭambar* or *ʕiṭṭambar* /vi/ to be filled to the maximum. - iva *miṭṭambar*.

ط ن ب ر [2]
طنبور *ṭambuur* /n pl *ṭanabiir*/ **1** Archimedes' screw (see Pl.E, 15). **2** *[mech]* flywheel, pulley-wheel. **3** drum, cylinder. **4** metal scoop wheel (used in irrigation, see Pl.E, 22).
طنبورة *ṭambuura* /n pl *-aat*/ **1** *[mech]* **1a** pulley-wheel. **1b** drum, cylinder. **2a** tambourine. **2b** type of drum used in black (Sudanese) *zaar*.

ط ن ب ك see ط م ب ا ك

ط ن ب و ش
طنبوشة *ṭambuuʃa* <It *tambuccio*> /n pl *-aat, ṭanabiiʃ*/ **1** metal scoop wheel used in irrigation (see Pl.E, 22). **2** *[naut]* booby-hatch.

ط ن ج ر
طنجرة *ṭangara* <T *tencere*> /n pl *ṭanaagir*/ *[obsol]* casserole dish. - also *tangara*.

ط ن س see [2] ت و ن س : *ṭuunis*

ط ن ش [1]
طناش *ṭanaaʃ* /n/ indifference.
طنّش *ṭanniʃ* /vt/ to act with indifference towards. *ṭanniʃuu-ni* they behaved as though I weren't there. *ṭanniʃ* forget it! skip it! - vn *taṭniiʃ*; ava *miṭanniʃ*.
¶ *ṭanniʃ ɛala* to fail to return (s.th.). *ṭanniʃ ɛala l-filuus* he didn't repay the money.
اتطنّش *ʕiṭṭanniʃ* or *ʕiṭṭanniʃ* /vi/ to be disregarded, be forgotten about. - iva *miṭṭanniʃ*.

ط ن ش [2] see ط ن ا ش ى : *ṭanaafi*

ط ن ط

طنط *ṭanṭ* <Fr *tante*> /ṅ/ title of, and form of address to, an older woman within one's circle of family and acquaintances ≈ aunt.

ط ن ط ا

طنطا *ṭanṭa* /prop n/ Tanta, a town in the centre of the Delta, capital of Gharbiya province.

طنطاوى *ṭanṭaawi* **1** /adj */ relating to Tanta. **2** /n */ (male) native of Tanta.

ط ن ط ن

طنطن *ṭanṭan* /vi/ to make a big fuss over, sing the praises of. *ʕamlin-lu ṭanṭana fil-intixabaat* they're making a big hullabaloo for him in the elections. - vn *ṭanṭana*; ava/pva *miṭanṭan*.

اتطنطن *ʔiṭṭanṭan* or *ʔiṭṭanṭan* /vi/ (impersonal) passive of *ṭanṭan*. *di bḍaaʕa yitṭanṭan liiha* is that the kind of merchandise to write home about? - iva *mitṭanṭan*.

ط ن ن [1]

طنّ *ṭann (i)* /vi/ to ring, resound. *widn-i bi-ṭṭinn* my ears are ringing. - vn *ṭaniin*; ava *ṭoanin*.

ط ن ن [2]

طنّ *ṭinn, ṭunn, ṭann* <perh Fr *tonne*> /n pl *ʔaṭnaan*/ (metric) ton, tonne.

ط ه

طه *ṭah* /fem n, pl *-aat*/ sixteenth letter of the Arabic alphabet. - also *ṭaa, ṭaaʔ*.

ط ه ر

طهر *ṭuhur* or *ṭihir (a)* /vi/ *[Isl]* to become (ritually) pure after the menses, childbirth or sexual intercourse. *baʕdi ma b-tiṭhar min il-ʕaada* after she is purified from the menses. - vn *ṭuhr, ṭahaara*; ava *ṭaahir*.

طهر *ṭahar (i)* /vt/ *[Isl]* to purify (something defiled). - ava *ṭaahir*; pva *maṭhuur*.

طهارة *ṭahaara* /n/ **1** purity. *ṭahaarit il-ʔabdaan wala ṭahaarit il-ʔadyaan [prov]* (a clean body is preferable to good ritual) ≈ cleanliness is next to godliness. **2** circumcision.

طاهر *ṭaahir [1]* /adj */ pure (in spirit). ‖*(ʔis-sitt) it-ṭahra* epithet of Sayyida Zaynab.

أطهر *ʔaṭhar* /el/ more/most ritually clean.

طهور *ṭuhuur* /n/ circumcision.

طهّر *ṭahhar* /vt/ **1** to purify, cleanse. *bi-nṣuum ʕaṣaan niṭahhar nafs-i-na* we fast in order to purify ourselves. ‖*laazim niṭahhar il-balad min il-gawasiis* we must cleanse the country of spies. **2** to sterilize, disinfect. *ʔid-duktuur ṭahhar ig-garḥ* the doctor cleaned the wound. **3** to dredge, clear (a waterway). - vn *taṭhiir*; ava/pva *miṭahhar*.

مطهّر *muṭahhir* /n pl *-aat*/ disinfectant, antiseptic.

اتطهّر *ʔiṭṭahhar* or *ʔiṭṭahhar* /vi/ passive of *ṭahhar*. - iva *miṭṭahhar*.

طاهر *ṭaahir [2]* /vt/ to circumcise. - vn *miṭahra*; ava/pva *miṭaahir*.

مطاهر *miṭaahir* /n */ circumciser.

اتطاهر *ʔiṭṭaahir* or *ʔiṭṭaahir* /vi/ to be circumcised. - iva *miṭṭaahir*.

استطهر *ʔistaṭhar* /vt/ to select for ritual purity. - vn *ʔistiṭhaar*; ava *mistaṭhar*.

ط ه ر ان

طهران *ṭahraan* /n/ **1** /prop n/ Teheran. **2** kind of Persian carpet.

ط ه ق

طهق *ṭihiq* or *ṭuhuq* or *ṭahaq (a)* /vi/ to become thoroughly fed up. *ṭihiqt i minnu* I'm fed up to the back teeth with him. - vn *ṭuhq, ṭahaqaan*; ava *ṭahqaan*.

طهّق *ṭahhaq* /vt/ to drive to distraction. *ṭahhaqt i mraat-ak wi-ʕyaal-ak* you've driven your wife and kids up the wall. - vn *taṭhiiq*; ava/pva *miṭahhaq*.

اتطهّق *ʔiṭṭahhaq* or *ʔiṭṭahhaq* /vi/ to be driven to distraction, become thoroughly fed up. - ava/iva *miṭṭahhaq*.

ط ه م

طهم *ṭaham (i)* /vt/ *[deris]* to fluster, preoccupy, keep busy. *ʔeeh illi ṭahm-ak kida* what has got you in such a flap? - vn *ṭahamaan*; ava *ṭaahim*; pva *maṭhuum*.

اتطهم *ʔiṭṭaham* or *ʔiṭṭaham* /vi/ passive of *ṭaham*. - iva *miṭṭihim*.

انطهم *ʔinṭaham* = *ʔiṭṭaham*. - iva *minṭihim*.

ط ه ى

طهى *ṭaha (i)* † /vt/ to cook. ‖*ṭaha l-maayil* to set the world to rights. - vn *ṭahy*; ava *ṭaahi*; pva *maṭhi*.

طهى *ṭahy* /n/ cooking. ‖*ʕaliil iṭ-ṭahy* tactless. *ʕillit ṭahy* tactlessness.

طاهى *ṭaahi* /n pl *ṭuhaah*/ cook.

اتطهى *ʔiṭṭaha* or *ʔiṭṭaha* /vi/ to be cooked. - iva *miṭṭihi*.

ط و ب [1]

طوبة *ṭuuba [1]* <Copt> /unit n, pl *-aat*/ **1** a brick. **2** a stone. ‖*rama ṭubt-(u)* ≈ to give up on (s.o.), to give up

one's hopes of (s.o.). - *gaat iṭ-ṭuuba fil-maɛṭuuba* (the stone came against that which was (already) damaged) there was a coincidence of unfortunate circumstances. - *zayy it-ṭuuba* as (heavy as) a rock. - *sabaɛ ṭubaat* children's ball game in which the two teams try to score by getting possession of the ball and bowling it at a pile of seven stones. **3** a piece of broken brick, tile, cement etc. **4** a piece of dry mud. — /interj/ **5** word said in order to jinx the opposing team (in ball games).

طوب *ṭuub* /coll n/ **1** brick(s). *ṭuub ʔaḥmar* red brick. *ṭuub nayy* unbaked mud brick. *ṭuub kasr* broken brick, rubble. **2** stone(s). *ṭuub ʔabyaḍ* limestone. ‖*ṭuub il-ʔarḍ* everybody, bar none, as in *bi-yiftiki minni l-ṭuub il-ʔarḍ* he's complaining about me to everyone in sight, *bi-yitxaaniq maɛa ṭuub il-ʔarḍ* he'll pick a fight with anyone, he's very quarrelsome.

طوبى *ṭuubi* (also *ʔaḥmar ṭuubi*) /adj invar/ brick-red.

طوّاب *ṭawwaab* /n * and pl *ṭawwaaba*/ brickmaker.

ط و ب ²

طوبه *ṭuuba*² <Copt> /n/ fifth month of the Coptic year, extending from early January to early February. *ṭuuba ṭṣayyar iṣ-ṣabiyya karkuuba* Tuba (is so cold that it) turns a young girl into a hag . *ruuḥi ya ṭuuba ya-lli ma-balletii-f fil-ʔarḍ*ⁱ *wala ɛarquuba* go away Tuba, you who haven't moistened (even) a single crack in the earth (comment on the dryness of the month).

ط و ب ³

طوباوى *ṭubaawi*↑ /adj */ *[Chr]* blessed (specifically with reference to Coptic bishops and patriarchs). *ʔabuu-na ṭ-ṭubaawi l-mukarram* our Father, the honoured and blessed (Patriarch).

طوّب *ṭawwab*↑ /vt/ *[Chr]* to praise (bishops and patriarchs) in the liturgy. - vn *taṭwiib*; ava/pva *miṭawwib*; pva *muṭawwab*.

اتطوّب *ʔiṭṭawwab* or *ʔiṭṭawwab* /vi/ passive of *ṭawwab*. - iva *miṭṭawwab*.

ط و ح

طاح *ṭaaḥ (i)* /vi/ **1** to hurtle, career. *ʔil-waad ṭaaḥ min ɛala kitf-i* the boy suddenly toppled off my shoulder. ‖*ṭaaḥ fil-ɛalaali* to exceed the bounds of moderation, as in *ʔil-ʔasɛaar ṭaaḥit fil-ɛalaali* prices went sky-high. - *ṭaayiḥ ibn*ⁱ *raayiḥ* ≈ here today, gone tomorrow, easy come, easy go (of money, possessions). **2** to lash out (verbally or physically). *ṭaaḥ fiyya* he blew up at me. *ṭaaḥ fiyya bil-ɛaṣaaya* he gave me a furious beating with the stick. - vn *ṭeeḥ, ṭayaḥaan*; ava *ṭaayiḥ*.

طوّح *ṭawwaḥ* /vt/ to throw far, fling far. *ʔeeh illi ṭawwaḥ-ak fi-ʔaaxir id-dinya kida* what made you live so far away? - vn *taṭwiiḥ*; ava *miṭawwaḥ*.

اتطوّح *ʔiṭṭawwaḥ* or *ʔiṭṭawwaḥ* /vi/ **1** to be flung or thrown far. **2** to sway, swing. *sakraan bi-yiṭṭawwaḥ* he's drunk and staggering along. **3** to get far, be far removed. *bi-yaaxud ik-koora w-yiṭṭawwaḥ biiha* he takes the ball and gets well clear. *beet miṭṭawwaḥ* a remote house. - ava/iva *miṭṭawwaḥ*.

ط و خ

طوخ *ṭuux* /prop n/ Tukh, a town and *markaz* in Qalyubiya province. ‖*ṭuux fi-miliig* a mix-up, confusion. - *ḥ-awaddii-k fi-ṭuux il-ɛafariit* ≈ I'll send you to the ends of the earth.

ط و د

منطاد *minṭaad* /n pl *manaṭiid*/ blimp, airship, dirigible.

ط و ر ¹

طور *ṭoor* /n pl *ʔaṭwaar*/ **1** stage, phase.. *ṭoor min id-dawra ṭ-ṭabiɛiyya* a stage in the life-cycle. **2** mood, state, disposition (of s.o.). *xarag ɛan ṭoor-u* he lost his temper. *raagil variib il-ʔaṭwaar* a man with an eccentric manner.

مطوور *maṭwuur* /adj */ rash, hasty, scatter-brained.

طوّر *ṭawwar*↑ /vt/ to develop, further, evolve. - vn *taṭwiir*; ava *muṭawwir, miṭawwar*; pva *muṭawwar*.

اتطوّر *ʔiṭṭawwar* or *ʔiṭṭawwar* /vi/ **1** to be developed, be evolved. **2** to burst one's tether, become furious. *ʔiṭṭawwart*ª *ɛaleehum* I got furious with them. - vn *taṭawwur*; ava/iva *miṭṭawwar*.

تطوّر *taṭawwur* /n pl *-aat*/ **1** development. *taṭawwur iṣ-ṣinaaɛa f-maṣr* the development of industry in Egypt. **2** evolution (of the human species).

ط و ر ²

طورة *ṭoora* /n pl *-aat, ṭiwar/ [rur]* **1** foursome, group of four (used in counting certain items of food). *ṭoorit kaḥk* four biscuits. *ṭorteen wi-gooz* ten. **2** some, a little. *ʔiddii-ni ṭoorit fuul* give me a little bit of (cooked) *fuul*.

ط و س ¹

طوّس *ṭawwis* /vt/ to tarnish. - vn *taṭwiis*; ava/pva *miṭawwis*.

اتطوّس *ʔiṭṭawwis*¹ or *ʔiṭṭawwis*¹ /vi/ to be or become tarnished. - ava/iva *miṭṭawwis*.

ط و س ²

طاووس *ṭawuus* /n pl *ṭawawiis*/ peacock.

اتطوّس *ʔiṭṭawwis*² or *ʔiṭṭawwis*² /vi/ to swagger, strut. - ava *miṭṭawwis*.

ط و ش [1]

طواشى *ṭawaaʃi* /n pl *ṭawaʃiyya*/ *[obsol]* eunuch.

طوّش *ṭawwiʃ* /vt/ **1** to lop off. **2** to castrate. - vn *taṭwiiʃ*; ava/pva *miṭawwiʃ*.

اتطوّش *ʔiṭṭawwiʃ* or *ʔiṭṭawwiʃ* /vi/ **1** to be lopped off. **2** to be castrated. - iva *miṭṭawwiʃ*.

ط و ش [2] see ط ى ش : *ṭawaf, ʔiṭṭawaf, ʔinṭawaf*

ط و ع

طاع *ṭaaɛ (i)* /vt/ to obey. *ma-ɛad-fⁱ b-yṭiiɛ ʔabuu* he no longer obeys his father. *kull-i-na ṭooɛ ʔamr-ak* we're all obedient to your command. ‖*xarag ɛan ṭooɛ(-u)* to disobey (s.o.). - *ʔana ṭooɛ ʔiid-ak* I'm yours to command. - vn *ṭooɛ*; ava *ṭaayiɛ*; pva *muṭaaɛ*.

طاعة *ṭaaɛa* /n/ obedience. ‖*beet iṭ-ṭaaɛa [Isl law]* a husband's house to which a deserting wife is legally obliged to return. - *ḥukm iṭ-ṭaaɛa* legal decision obliging a deserting wife to return to her husband's house.

طوّع *ṭawwaɛ* /vt/ to render obedient, bring to compliance. - vn *taṭwiiɛ*; ava *miṭawwaɛ*.

اتطوّع *ʔiṭṭawwaɛ* or *ʔiṭṭawwaɛ* /vi/ **1** to volunteer. *ʔiṭṭawwaɛ fig-geef* he volunteered for the army. **2** to be rendered obedient. - vn *taṭawwuɛ*↑; ava/iva *miṭṭawwaɛ*.

متطوّع *miṭṭawwaɛ, mutaṭawwiɛ*↑ /n */ volunteer.

طاوع *ṭaawiɛ* /vt/ to acquiesce with. *ḥ-aṭawiɛ-ha ɛala ɛaql-a-ha* I'll go along with her whims, I'll humour her. - vn *miṭawɛa*; ava *miṭaawiɛ*.

اتطاوع *ʔiṭṭaawiɛ* or *ʔiṭṭaawiɛ* /vi/ to be obeyed. - iva *miṭṭaawiɛ*.

أطاع *ʔaṭaaɛ*↑ /vt/ to obey. - vn *ʔiṭaaɛa*; ava *muṭiiɛ*; ava *muṭaaɛ*.

استطاع *ʔistaṭaaɛ*↑ /vi/ to be able. - vn *ʔistiṭaaɛa*; ava *mustaṭiiɛ*.

ط و ف

طاف *ṭaaf (u)* **1** /vt/ to circle, circumambulate. **2** /vi/ to circulate, tour (around). - vn *ṭawaaf, ṭoof, maṭaaf*; ava *ṭaayif*.

طواف *ṭawaaf* /n/ *[Isl]* the ritual of going around the Kaaba in Mecca, particularly during the pilgrimage.

طوف *ṭoof* /n pl *ʔaṭwaaf, ṭiwaaf*/ **1** low surrounding wall of brick plastered with mud. **2** raft.

طوفة *ṭoofa* /n pl *-aat*/ temporary mental disorder. *saɛaat tigii-lu ṭoofa kida yibqa yzaɛɛaq mif ɛaarif bi-yquul ʔeeh* sometimes he gets a fit of madness that makes him shout and scream without knowing what he is saying.

مطاف *maṭaaf* /n/ effort, labour. *ʔaadi ʔaxrit il-maṭaaf* ≈ I've been flogging a dead horse.

طايفة، طائفة *ṭayfa* /n pl *ṭawaayif, ṭawaaʃif*/ **1** group, class, party, sect. *ṭayfit il-miɛmaar* construction labourers. **2** Sufi order.

طائفى *ṭaaʃifi*↑ /adj */ factional, sectarian.

طوفان *ṭufaan* /n/ flood.

طوّاف *ṭawwaaf* /n pl *ṭawwaafa*/ rural postman.

اتطاف *ʔiṭṭaaf* or *ʔiṭṭaaf* /vi/ (impersonal) passive of *ṭaaf*. *ʔil-huduum di ma-yiṭṭaf-fⁱ fiiha* these clothes are not fit to go around the Kaaba in. - iva *miṭṭaaf*.

انطاف *ʔinṭaaf* = *ʔiṭṭaaf*. - iva *minṭaaf*.

طوّف *ṭawwif* /vt/ **1** to build a low wall (of mud-plastered brick) around (s.th.). **2** *[Isl]* to conduct (pilgrims) through the Meccan pilgrimage rites. **3** to cause to circle or circumambulate. - vn *taṭwiif*; ava *miṭawwif*.

مطوّف *muṭawwif* /n */ guide for pilgrims at Mecca.

اتطوّف *ʔiṭṭawwif* or *ʔiṭṭawwif* /vi/ passive of *ṭawwif*. - iva *miṭṭawwif*.

ط و ق [1]

طوق *ṭooq* /n pl *ʔaṭwaaq*/ **1** ring, hoop. ‖*ṭooq in-nagaah* life-belt, life-saver. **2** neckband. **3** *[print]* chase. ‖*huwwa naazil min ṭooq-u* (1) he's the very image of him. (2) he can hardly bear (to do or to face) it.

طاق *ṭaaq*[1] /coll n/ aperture(s), opening(s) (especially in the wall of a mud-brick house). ‖*min il-baab liṭ-ṭaaq* ≈ just like that, for no apparent reason, as in *ɛaawiz titxaaniq kida mil-baab liṭ-ṭaaq* do you want to quarrel like that, for no reason at all?

طاق *ṭaaq*[2] /n pl *-aat*/ measure (in expressing the multiplication of a quantity). *ḥ-addii-lu ṭ-ṭaaq ṭaqeen* I'll pay him back double. *ʔiftaval iṭ-ṭaaq ṭaqeen* to work with redoubled energy. *ʔil-biḍaaɛa rilyit iṭ-ṭaaq ɛafara* the goods became ten times more expensive.

طاقة *ṭaaqa*[1] /n pl *-aat, ṭiqaan*/ **1** aperture, opening (especially one built into the wall of a mud-brick house). *ṭaaqit iz-ziriiba* ventilation hole of an animal pen. *ṭaaqit il-furn* opening of a *baladi* oven or baker's oven. *ṭaaqit il-manaxiir* nostril opening. ‖*ṭaaqit il-qadr [Isl]* the celestial light said to appear on *leelit il-qadr*; it is believed that those fortunate enough to see it may have their wishes granted. **2** niche (especially one built into the wall of a mud-brick house). ‖*ʔilli ḥaṭṭeet-u fiṭ-ṭaaqa tilqaa fiṭ-ṭaaqa [prov]* ≈ save for a rainy day. **3** hank, skein, coil (of thread). **4** bolt (of cloth). *ṭaaqit il-huduum bi-ykuun fiiha talatiin mitr* a bolt of cloth contains thirty metres.

طاقيّة *ṭaqiyya* /n pl *ṭawaaqi*/ **1** skull-cap (see Pl.F, 1). ‖*ṭaqiyyit zift* folk remedy for baldness, involving a cap

of pitch. - *ṭaqiyyit il-ʕixfa* a mythical *ṭaqiyya* said to have the power of making its wearer invisible. *da ʕamr[i] mustaḥiil tanfiiz-u - da-nta ɛaayiz ṭaqiyyit il-ʕixfa ɛaʃaan tiɛraf tiɛmil il-ḥikayaa-di* that's an impossible venture - you'd need to make yourself invisible for that! - *ʕiqlaɛ ṭaqiyt-ak wi-fallii-ha* take off your skullcap and go through it for nits! (to an over-finicky person). **2** head or cap (of a nail or the like).

طوّق *ṭawwaq* /vt/ **1** to surround, encircle. *ṭawwaqt[i] raqabt-u bi-gmiila* I got a hold on him by doing him a favour. **2** to fine (particularly a stowaway on a train). **3** to put to (great) expense. *ḥa-nṭawwaq-ak fi-ɣadwa* we'll get you to cough up the money for a lunch. **4** to buff, shine (with a dry cloth). - vn *taṭwiiq*; ava/pva *miṭawwaq*.

تطويق *taṭwiiq* /n/ rubbing glove (for grooming a horse).

اتطوّق *ʕitṭawwaq* or *ʕiṭṭawwaq* /vi/ passive of *ṭawwaq*. *ʕin ḥabbit-ak il-ḥayya ʕiṭṭawwaq biiha [prov]* (if a serpent loves you, wrap it around your neck) one should treasure friendship. - ava/iva *miṭṭawwaq*.

ط و ق [2]

طاق *ṭaaq[3] (i)* /vt/ to endure, bear. *ʕana miʃ ṭaayiq ir-raagil da* I can't stand that man. - /the literary passive imperfect occurs/ *ʕil-ɛiiʃa baqit laa tuṭaaq* life became impossible to bear. ‖ *tisaxxani l-mayya ttiqii-ha b-ʕiid-ik* you heat the water till it's hand-hot. - vn *ṭayaqaan*; ava *ṭaayiq*.

طاقة *ṭaaqa[2], ṭaaqa* /n pl *-aat*/ power, capability. *ʕiɛmil guhd[i] ṭaqt-ak* do your very best! *ṭaaqit il-makana maḥduuda* the machine has a limited capacity. *da fooq ṭaqt-i* that's more than I can manage. *ʕil-ɣawwaaṣa di b-tiftaɣal biṭ-ṭaaqa n-nawawiyya* this is a nuclear-powered submarine.

اتطاق *ʕitṭaaq* or *ʕiṭṭaaq* /vi/ to be endured, be borne. *ʕil-quɛaad fil-balad di ma-yitṭaq-ʃ* staying in this country is unbearable. - iva *miṭṭaaq*.

ط و ك ر

طوكر *ṭookar* /prop n/ Tokar (a place to the south-east of Port Sudan at which a small Egyptian force was defeated by the Mahdists in 1884). ‖ *raaḥ fi-ṭookar* to come to a bad end (usually by tangling with the law).

ط و ل [1]

طول *ṭiwil (a)* /vi/ **1a** to become long, be prolonged. *ʕil-leel bi-yiṭwal fiʃ-ʃita* the nights become longer in winter. **1b** *[soccer]* to overshoot (of the ball). **2** to grow long(er) or tall(er). *bukra ʃaɛr-ak yiṭwal taani* your hair will grow again soon. *ʕiʃ-ʃagara di ṭiwlit fi-leela* this tree has grown overnight. ‖ *ʕiṭwal↓* get up! stand up! - *raqabt-u ṭiwlit* he felt proud. - *lisaan-u ṭiwil* he became insolent. - *ʕiwɛa s-silaaḥ yiṭwal fi-ʕiid-ak* be careful with that knife in your hand! - *ʕiid-u ṭiwlit ɛala l-fuluus* he stole the money. - vn *ṭuul, ṭawalaan*; ava *ṭaayil*.

طال *ṭaal (u)* **1** /vi/ = *ṭiwil* 1. ‖ *ṭaal il-maṭaal* it's been a long wait, it's been a long time. **2a** /vt/ to reach, attain. *law ṭult-ak ḥ-aḍrab-ak* if I catch you I'll hit you! *ʕiid-u ma-ṭalit-ʃ il-burtuqaana* his hand couldn't reach the orange. *ṭaal-u ḥabbit bard* he had a touch of cold. *ʕiʃ-ʃaay da ṭaal-u gaaz* this tea has a slight taste of kerosene. ‖ *la ṭaayil il-moot wala l-ḥaya* half-way between life and death. - *ḥabb[i] w-la-ṭal-ʃ* he had an unrequited love affair. - *ʕilli ṭuul-u ʕaḥsan min ɛeen(-u)* get whatever you can out of (him). **2b** /preverb/ to get to. *law ʕaṭuul ʕakallim-u ...* if (only) I could get to speak to him .... - vn *ṭuul, ṭawalaan*; ava *ṭaayil*.

طول *ṭuul* **1** /vn/ ‖ *ṭuul* (or *ṭuulit*) *il-ʕiid* thievery, larcenous inclination. - *ṭuul* (or *ṭuulit*) *il-baaɛ* influence, pull. - *ṭuul* (or *ṭuulit*) *ir-rooḥ* slowwittedness. - *ṭuul* (or *ṭuulit*) *il-lisaan* rudeness, insolence. - *ṭuul* (or *ṭuulit*) *il-ɛumr* (1) life span. (2) long life, longevity. - *ṭuul* (or *ṭuulit*) *il-baal* patience. **2** /n pl *ʕaṭwaal*/ **2a** length. *ṭuul il-ʕooḍa* the length of the room. *ʕil-ʕaṭwaal di ɛandak* do you have these lengths? *biṭ-ṭuul* lengthwise. ‖ *ɛala ṭuul* (1) straight ahead, straight on. (2) right away, immediately. (3) continuously, incessantly. - *ṭuul bi-ɛarḍ* every inch a ... (and yet revealing a shortcoming), as in *mustaffa ṭuul bi-ɛarḍ[i] wi-ma-fihaa-ʃ ʕibra* a fantastic hospital like this, and no hypodermics in it! - *ʕana f-ɛarḍ-ak ʕana f-ṭuul-ak* ≈ I implore you! **2b** *[geog]* longitude. *xaṭṭ[i] ṭuul* line of longitude. **2c** height, size. *ʕil-walad da ṭuul-u kaam* how tall is that boy? ‖ *wiqiɛ min ṭuul-u* he fell full-length. - *raagil bi-ṭuul-u* a man unaided, a man alone. - *ga b-ṭuul-u* to bring nothing, come empty-handed. - *ya ṭuul-ak ya ʕax-i* be your age, pal! - *hizz[i] ṭuul-ak* get a move on! - *maaʃi yhizz[i] ṭuul-u* swaggering. **3** /prep/ (also *ṭuulit*) throughout, all ... long. *ṭuul il-leel* all night long. *ṭuul ɛumr-i* all my life. ¶ *ṭuul ma* (also *ṭuulit ma*) /conj/ as long as, while. *ʕana mabsuuṭ ṭuul ma-nta maɛaaya* I'm happy as long as you're with me.

طولة *ṭuula* see *ṭuul*.

طولى *ṭuuli* /adj/ **1** longitudinal. **2** oblong.

طالما *ṭaalama↑* /conj/ as long as.

طوالة *ṭiwaala* /n pl *-aat, ṭawaayil, ṭawawiil*/ **1** feeding trough (built against a wall at floor level for feeding livestock). **2** *[constr]* wooden ramp for climbing scaffolding.

طويل *ṭawiil, ṭiwiil* /adj pl *ṭuwaal/* **1a** physically long. *naḥyit il-ḥizaam iṭ-ṭawiila* the long end of the strap. ‖*ṭiwiil ʕariiḍ* a great big (person). - *ʔiid-u ṭawiila* he's light-fingered, he's sticky-fingered. - *ḥibaal-u ṭawiila* he takes his own sweet time. - *lisaan-u ṭawiil* he is insolent. **1b** long in duration. *mudda ṭawiila* a long time. *ʔaqsaaṭ ṭawiilit il-ʔagal* long-term instalments. **2** tall. *raagil ṭawiil zayy il-madna* a very tall man. *ṭawiil wi-ʔahbal* tall and simple, oafish. *kullu ṭawiilin habiil (wa-kullu qaṣiirin makiir) [prov]* every tall man is stupid (and every short man is sly). ‖*(xarag minha) ṭawiil ṭawiil* (he got out of it) scotfree.

طويلة *ṭawiila:* ʔ*abu ṭawiila* **1** tall man. **2** dolt, oaf.

أطول ʔ*aṭwal* /el/ more/most long or tall. *lisaan-u ʔaṭwal minnu* he's extremely rude.

طوّالة *ṭawwaala* /n pl *-aat/* bench.

طوّالى *ṭawwaali* **1** /adj invar/ direct. *xaṭṭ*^{i} *ṭawwaali* a direct (railway) line. *quṭuraat ṭawwaali* trains operating on direct lines. **2** /adv/ (1) straight ahead, straight on. (2) right away, immediately. (3) continuously, incessantly.

مطال *maṭaal: ṭaal il-maṭaal* it's been a long wait, it's been a long time.

مطيول *miṭeewal, miṭeewil* /adj/ elongated.

انطال ʔ*inṭaal* /vi/ to be reached, be reachable. *yinṭaal min taḥt iṭ-ṭibbaak* it can be reached from beneath the window. - iva *minṭaal.*

اتطال ʔ*iṭṭaal* or ʔ*iṭṭaal* = ʔ*inṭaal.* - iva *miṭṭaal.*

طوّل *ṭawwil* /vt/ **1** to lengthen, make longer. *ṭawwil-li l-kumm*^{i} *ʃwayya* make the sleeve a little longer! ‖*ṭawwil baal-ak* be patient! - ʔ*allahumma ṭawwil-ik ya rooḥ* God, give me patience! **2** to make tall(er). ʔ*il-fustaan da yṭawwil-ik* that dress makes you (appear) taller. ‖*ṭawwil raqabt-i* he made me feel proud. **3** to bring within reach. *bass*^{i} *ṭawwilu-huu-li* just let me get my hands on him! *rabb-i ṭawwil-ni lli f-baal-i* Lord, grant my wish! — /vi/ **4** to become (excessively) prolonged. ʔ*il-qaʕda ṭawwilit* the get-together dragged on and on. ‖*ma-ṭṭawwil-ʃ* (1) don't keep going on! shut up! (2) don't be away for long. - *la ṭṭawwil wala ṭqaṣṣar [abus]* just shut up! - vn *ṭaṭwiil*; ava/pva *miṭawwil.*

اتطوّل ʔ*iṭṭawwil* or ʔ*iṭṭawwil* /vi/ passive of *ṭawwil.* - iva *miṭṭawwil.*

اتطاول ʔ*iṭṭaawil* or ʔ*iṭṭaawil* /vi/ to behave presumptuously or insolently. *ma-tiṭṭawil-ʃ*^{i} *ʕala lli* ʔ*akbar minnak* don't be rude to your elders. - vn *taṭaawul*↑; iva *miṭṭaawil.*

استطول ʔ*istaṭwil, istaṭwal* /vt/ **1** to consider (too) long. ʔ*istaṭwilna l-masaafa rgiʕna* we found the distance too long, so we turned back. **2** to consider (too) tall. ʔ*istaṭwil in-naxla ʕaam ma-rḍii-ʃ yiṭlaʕ-ha* he thought the palm tree was too high, so he refused to climb it. ‖*baayin ʕaleehum istaṭwaluu-k* apparently they took you for a big dolt. **3** to select for length or tallness. ʔ*istaṭwil-li ʕaṣaaya w-hat-ha* find me a long stick and bring it. - ava *mistaṭwil.*

مستطيل *mustaṭiil* **1** /adj/ oblong, rectangular. **2** /n pl *-aat/* oblong, rectangle.

ط و ل ²

طاولة *ṭawla* <It *tavola*> /n pl *-aat/* **1a** backgammon. **1b** backgammon board. **2** baker's straight-sided rectangular tray (on which baked goods are prepared for baking and delivery). **3**↑ table. *tinis iṭ-ṭawla* table tennis.

طاولجى *ṭawilgi* /n pl *-yya/* baker's delivery boy.

ط و و

طوّة *ṭawwa* <T *tava* from P> /n pl *-aat/* metal or earthenware pot.

ط و ى

طوى *ṭawa (i)* /vt/ **1** to fold, fold up. ‖*ṭaweet-u taḥt*^{i} *baaṭ-i* I made him my man. **2** to put out of mind, forget. ʔ*aḥsan ḥaaga tiṭwi l-ḥuzn*^{i} *da wi-tirgaʕ li-ʔahl-ak* the best thing would be for you to bury this sorrow and return to your family. - vn *ṭayy, ṭawy*; ava *ṭaawi*; pva *maṭwi.*

طىّ *ṭayy* /vn/ ‖*ṣoom iṭ-ṭayy [Chr]* fast of total abstinence from food. - *ṭayy*^{a} *ʕala layy* on an empty stomach, as in *baat ṭayy*^{a} *ʕala layy* he went to bed supperless.

طيّة *ṭayya* /n pl *-aat/* a fold.

مطوة، مطواة *maṭwa* /n pl *maṭaawi/* **1** jack-knife, pocket-knife. *maṭwit ṭaʕm [hort]* grafting knife. **2** tall story, fish story. *bi-yiḍrab maṭaawi* he's telling tall stories. **3** *[text]* warp cylinder.

انطوى ʔ*inṭawa* /vi/ **1** to be folded, be folded up. ‖ʔ*inṭawa baʕd*^{i} *ma maatit* he cut himself off from society after she died. - *minṭiwi ʕala nafs-u* introverted. **2** to be put out of mind, be forgotten. ʔ*inṭawa maʕa z-zaman* it was forgotten with time. - vn ʔ*inṭiwa,* ʔ*inṭiwaa*ʔ; ava/iva *minṭiwi.*

انطواء ʔ*inṭiwaa*ʔ↑ /n/ introversion.

منطوى *munṭawi*↑ /adj */ introverted.

اتطوى ʔ*iṭṭawa* or ʔ*iṭṭawa* = ʔ*inṭawa.* - ava/iva *miṭṭiwi.*

ط ى ب ¹

طاب *ṭaab*² *(i)* /vi/ **1a** to be or become virtuous, be or

become good. *kallim-u - yimkin ʔalb-u yṭiib* talk to him - maybe he'll soften. **1b** to become pleasing, become agreeable. *ʕil-ʕiiʃa ṭaabit luhum* life became agreeable for them. ‖*mimma lazza wa-ṭaab↑* ≈ the choicest of food. **2a** to become cooked. *ʕistanna lamma l-baṭaaṭis tiṭiib* wait till the potatoes are done. ‖*laḥm-i ṭaayib* I'm worn out. **2b** to become ripe. **3** to heal, recover (from illness). *ṭibt* have you recovered? ‖*ʕiʃrab lamuun ʔalb-ak yiṭiib* drink some lemon - it will refresh you. **4** to turn cool (of weather). - vn *ṭayabaan, ṭiyaab*; ava *ṭaayib*.

طياب *ṭiyaab* /pl n/ (cool) north wind.

طيابة *ṭiyaaba* = *ṭiyaab*.

طيب *ṭiib↑* /n/ perfume, scent. ‖*gooz iṭ-ṭiib* or *goozit iṭ-ṭiib* nutmeg. - *ʔan ṭiib xaaṭir* willingly.

طيبة *ṭiiba*[1] /n/ kindness, good-heartedness.

طيّب *ṭayyib*[1] /adj */ **1** good-hearted, kind. *raagil ṭayyib* a good man. *ʕiṭ-ṭayyib marriteen ʔabiiṭ [prov]* he who is excessively kind is a fool. *ma-lak-ʃ*[i] *fiṭ-ṭayyib naṣiib* you don't have what it takes to mix with the good (people). **2** naive. **3** *[frozen contexts]* good, excellent. *kull*[i] *sana wi-nta ṭayyib* ≈ may the reoccurrence of this day, or occasion, find you well (a greeting on all annually celebrated occasions). *ʔirʃeen ṭayyibiin* a good sum of money. *ʃiwayya ṭayyiba* or *ʃiwayya ṭayyibiin* (1) a good while. (2) a good quantity. ‖*zeet ṭayyib* olive oil. - *ʕil-ʔaʃara ṭ-ṭayyiba* (points-winning) ten of diamonds in *koomi* (q.v.). — /n, no pl/ **4** good turn(s), good deed(s). *ʕiʔmil iṭ-ṭayyib wi-rmii l-baḥr [prov]* ≈ do good deeds for their own sake. — /adv/ **5** well. *ʔamalt*[i] *ṭayyib* you've done well. — /interj/ **6** all right! O.K.! see further under [1] ط ب

أطيب *ʕaṭyab* /el/ **1** more/most good-hearted. **2** more/most pleasant.

مطايب *maṭaayib* /pl n/ best parts, choicest items. *maṭaayib id-dibiiḥa* the best cuts of meat.

طيّب *ṭayyib*[2] /vt/ **1** to perfume, scent. **2a** to make ripe, ripen. **2b** to cook (food) till ready to eat. **3** to heal. *ʕil-marham ḥa-yṭayyib ig-garḥ* the ointment will heal the wound. ‖*ṭayyib xaṭr-u* he consoled him, made him feel better. **4** *[rur]* to do well, make a good job of. - vn *taṭyiib*; ava/pva *miṭayyib*.

مطيّباتي *miṭayyibaati* /n pl -yya/ **1** member of an audience or claque who voices his appreciation during a performance. **2** flatterer, sycophant.

اتطيّب *ʕiṭṭayyib* or *ʕiṭṭayyib* /vi/ passive of *ṭayyib*[2]. - ava/iva *miṭṭayyib*.

استطيب *ʕistaṭyab, ʕistaṭyib* /vt/ **1a** to consider kind, or good-hearted. **1b** to consider naive. **2a** to select for kindness or goodness. **2b** to select for naiveté. **3** to act like a good-hearted person, give an appearence of kindness. - vn *ʕistiṭyaab*; ava/iva *mistaṭyab, mistaṭyib*.

[2] ط ى ب

طيبة *ṭiiba*[2] /prop n/ (Egyptian) Thebes.

[3] ط ى ب see ط ا ب : *ṭaab*[1], *ṭaaba*

ط ى ح see ط و ح : *ṭaaḥ*

ط ى ر

طار *ṭaar*[2] *(i)* /vi/ to fly. *ʕil-ḥamaama miʃ ʔadra tṭiir* the pigeon can't fly. ‖*ṭaarit lil-mustaffa* she rushed off to the hospital. - *kaan ṭaayir min il-faraḥ* he was walking on air. - *ʕin-noom ṭaar min ʕenee* sleep left him. - *ʕaʔl-i* (or *muxx-i*) *ṭaar* I lost my mind. - *ʕil-maʕaad ṭaar min muxx-i* the appointment went right out of my mind. - *hiyya d-dinya ṭaarit* or *ʕid-dinya ma-ṭarit-ʃ* why are you in such a hurry? - *ʕil-maḥfaẓa ṭaarit* the wallet has been pinched. - *ʕaṭ-ṭaayir* quickly, briefly, instantly, as in *bi-yifham-ha ʕaṭ-ṭaayir* he catches on very quickly. - *bi-yifhami-ha w-hiyya ṭayra* he's very quick-witted. - *ʕana ṭaayir xaaliṣ* I'm stoned, I'm far gone. - *koora ṭayra* volleyball. - vn *ṭayaraan*; ava *ṭaayir, ṭaaʕir, ṭayraan*.

طير *ṭayar (i)* /vt/ **1** to rush, hustle (s.o.). **2** to make irrational, make (s.o.) lose his head. *bitaaʕ il-mazamiir ṭayar il-ʕiyaal* the whistle-seller got the children in a frenzy (to buy). - vn *ṭayaraan*; ava *ṭaayir*; pva *maṭyuur*.

طيران *ṭayaraan* /n/ aviation. *ʃirkit ṭayaraan* airline company. *silaaḥ iṭ-ṭayaraan* the Air Force.

طير *ṭeer* /coll n/ **1** poultry and pigeon(s), domestic fowl. ‖*ʔaṣʔaṣ ṭeer-ak la yluuf bi-ʁeer-ak [prov]* ≈ clip your fowl's wings and they won't fly off to anyone else. **2** birds. *ʕiṭ-ṭeer ig-gaariḥ* birds of prey. *miʃ kull iṭ-ṭeer illi yittaakil laḥm-u [prov]* (not all birds have edible flesh) ≈ not everyone will allow himself to be exploited. - *law kaan fii xeer ma-kan-ʃ*[i] *ramaa ṭ-ṭeer [prov]* if there were any good in it, the birds would not have discarded it (i.e. it is totally useless). **3**↓ flies. *yiʕaawid iṭ-ṭeer wi-yuʔaʕ fil-ʕasal [prov]* (the flies are sure to come back and fall into the honey) there is always a second chance to catch a wrongdoer.

طيرة *ṭeera* /unit n, pl *-aat*/ **1** a chicken, pigeon etc. **2** a bird. **3**↓ a fly.

طيور *ṭuyuur↑* /pl n/ birds. *ʕaṭ-ṭuyuuru ʕala ʕaʃkaal-i-ha taqaʕ [prov]* birds of a feather flock together.

طيّار *ṭayyaar* /n */ **1** aeroplane pilot. ‖- /adjectivally/ *naqiib ṭayyaar* Air Force captain (and similarly for other ranks in the Air Force). **2** /adj/ volatile (of substances). *ʕiz-zuyuut iṭ-ṭayyaara* volatile oils.

طيّارة *ṭayyaara* /n pl *-aat*/ **1** aeroplane. ‖*ṭayyaara waraq* kite. **2** *[rur]* temporary animal pen in a field.
طيّارى *ṭayyaari* **1** /adj/ rash, hasty. *ʕaql-u ṭayyaari* he is rash. **2** /adv/ hastily.
مطار *maṭaar* /n pl *-aat*/ airport.
طيّر *ṭayyar* /vt/ to cause to fly. *ʔil-hawa ṭayyar il-ʕimma* the wind sent the turban flying. ‖*ḥa-ṭṭayyar filus-ha kull-a-ha* she's going to blow all her money. *-ṭayyar diraaʕ-u f-ḥadsa* he lost his arm in an accident. *-ḥa-ṭṭayyar ʕaql-i* (or *muxx-i*) you'll drive me mad! *-gaab gooz ḥamaam wi-ṭayyar-u* he brought a pair of pigeons and kept them till they could fly (i.e. for breeding). -vn *taṭyiir*; ava/pva *miṭayyar*.
مطيّراتى *miṭayyaraati* /adj pl *-yya*/ light-fingered.
اتطيّر *ʔiṭṭayyar* or *ʔiṭṭayyar* /vi/ passive of *ṭayyar*. -iva *miṭṭayyar*.

ط ى ز
طيز *ṭiiz* <T *tiz*> *[coarse]* /fem n, pl *ṭiyaaz*, *ʔaṭyaaz*/ **1** buttocks, rump, arse. *ʕiryaan iṭ-ṭiiz yiḥibb it-taqmiiz [prov]* (it is) the bare-arsed (who) likes to wiggle ≈ it is the poor who like to keep up with the Joneses. ‖*rooḥ-u f-ṭiiz-u* he's quick-tempered. *-muxx-u f-ṭiiz-u* he's brainless. *-ma-ḥuu-ʃ ṭiiz* he can't sit still. *-humma ṭizeen fi-ḍbaas* they're inseparable. *-ʕird abu ṭiiz ḥamra* baboon. *-ṭiiz-ak ḥamra* ≈ you're talking nonsense! **2** rear end of any object. *ṭiiz il-ʕarabiyya* back end of the car. ‖*... fi-ṭiiz ...* right after the other, as in *sigaara f-ṭiiz sigaara* one cigarette after another. -/adj invar/ **3** clumsy, oafish, thick.
أطيز *ʔaṭyaz* /el/ more/most clumsy, oafish or thick.
طيّز *ṭayyiz* /vi/ to behave stubbornly, refuse to move, be stupid and oafish. -vn *taṭyiiz*; ava *miṭayyiz*.

ط ى ش
طاش *ṭaaf (i)* /vi/ to stray, go off course. *ruṣaaṣa ṭayfa ṣabit-ha* a stray bullet hit her. *ʔil-walad ṭaaf* the boy went off the rails. -vn *ṭeef, ṭiif, ṭayaafa, ṭayafaan*; ava *ṭaayif*.
طوّش *ṭawwaf (i)* /vt/ to make heedless or negligent. *maa lak maṭwuuf kida* why are you so reckless? -ava *ṭaawif*; pva *maṭwuuf*.
طيش *ṭeef, ṭiif* /n/ recklessness, rashness. *ṭeef if-ʃabaab* the heedlessness of youth.
طياشة *ṭayaafa* = *ṭeef*.
طيشة *ṭiifa* /n/ *[deris]* someone held in reserve and used only as a stopgap, someone to fall back on when there is no-one better around.
طايش *ṭaayif* /adj */ rash, hasty.
اتطوش *ʔiṭṭawaf* or *ʔiṭṭawaf* /vi/ passive of *ṭawaf*. -iva *miṭṭiwif*.
انطوش *ʔinṭawaf* = *ʔiṭṭawaf*. -iva *minṭiwif*.

(ط ى ط)
طيط *ṭiiṭ: ʔaaxir iz-zamr' ṭiiṭ [prov]* at the end of the piping is a squeak (of fruitless effort).
طيطه *ṭiiṭa: nooma w-tamṭiiṭa ʔaḥsan min faraḥ ṭiiṭa [prov]* sleep and stretching out (at home) are better than (pointless) party-going.

ط ى ع see ط و ع: *ṭaaʕ*

ط ى ف see also ط و ف
طيف *ṭeef* /n pl *ʔaṭyaaf*/ **1** spectre, apparition. **2** image, shadow. ‖*ʔiṭ-ṭeef iḍ-ḍawʔi [phys]* the spectrum.

ط ى ق see ط و ق: *ṭaaq*

ط ى ل س –
طيلسان *ṭaylasaan* /n/ *[Chr]* mitre.

ط ى م see ط ا ى م: *ṭaayim*

ط ى ن
طين *ṭiin* /n/ **1a** mud, alluvium. ‖*maṣṭaba ṭiin* a mud bench. *bi-ṭiin-u wala ɣasiil il-birak* unwashed (food) is better than (food) washed in (dirty) pools (vegetable vendor's cry). ‖*ʕaamil widn' min ṭiin wi-widn' min ʕagiin [prov]* turning a deaf ear. *-zift iṭ-ṭiin da* that unmentionable so-and-so! *-ḥaẓẓ-i ṭiin* my luck is lousy. *-zawwid iṭ-ṭiin balla* he made things go from bad to worse. **1b** clay. **2** /pl *ʔaṭyaan*/ land, agricultural property.
طينة *ṭiina* /unit n, pl *-aat*/ **1** a clod (of mud or earth). ‖*sakraan ṭiina* dead drunk. **2** a type of clay. ‖*kull-u-hum ṭiina waḥda* they're all of a kind. *-ʔiṭ-ṭiina min iṭ-ṭiina wil-latta min il-ʕagiina [prov]* like father like son.
طينى *ṭiini* /adj/ **1** muddy. **2** made of clay.
طيّن *ṭayyin* /vt/ **1** to daub with mud or clay. **2** *[slang]* to botch, bungle. *ṭayyint il-imtiḥaan* I made a mess of the exam. ‖*ṭayyint-a-ha* I got dead drunk. *-ṭayyint-a-ha ʕala ḍmaav-ak* you've made it worse for yourself. — /vi/ **3** to become bad, become a mess (of, e.g., a situation). *ʔil-ʕaḍiyya ṭayyinit* the case took a turn for the worse. -vn *taṭyiin*; ava/pva *miṭayyin*.
مطيّن *miṭayyin* /adj */ lousy, awful. *yoom miṭayyin* a lousy day.
اتطيّن *ʔiṭṭayyin* or *ʔiṭṭayyin* /vi/ passive of *ṭayyin*. -ava/iva *miṭṭayyin*.

ط ى ى see ط و ى: *ṭayy, ṭayya*

ظ

ظ ا

ظا *ẓaa* /fem n/ seventeenth letter of the Arabic alphabet. - also *ẓaaʕ, ẓah*.

ظ ا ء

ظاء *ẓaaʕˀ* /fem n, pl *-aat*/ seventeenth letter of the Arabic alphabet. - also *ẓaa, ẓah*.

ظ ب ط

ظبط، ضبط *ẓabaṭ* (also *zabaṭ*[2]) *(u)* /vt/ **1** to adjust, regularize, order. *ẓabaṭ il-ḥisaab* he put the account in order. *ẓabaṭna n-niẓaam fil-madrasa* we re-established order in the school. *bi-yuẓbuṭ il-minabbih ɛafaan yiṣḥa badri* he sets the alarm clock in order to wake up early. ‖ *ʃil-ɛaskari b-yuẓbuṭ (il-xaṭwa) maɛa zmiil-u* the policeman keeps in step with his comrade. **2** to tune (an engine, a musical instrument etc.). ‖ *ʃuẓbuṭ il-maḥaṭṭa* tune into the (radio) station (properly)! **3** to catch, apprehend. *ʃil-buliiṣ ẓabaṭ il-ḥagaat il-masruuqa* the police seized the stolen goods. *miraat-u ẓabaṭit-u fis-siriir maɛa ɛafiqt-u* his wife caught him in bed with his mistress. - vn *ẓabaṭaan, ẓabṭ, zabṭ, ḍabṭˀ*; ava *ẓaabiṭ*; pva *maẓbuuṭ*.

ظبط، ظبط *ẓabṭ, ḍabṭ* (also *zabṭ*) /vn/ ‖ *ḍabṭ in-nafs* self-control. - *ʃaay ẓabṭ* excellent tea. - *biẓ-ẓabṭ* exactly, as in *ʃis-saaɛa tnaafar biẓ-ẓabṭ* twelve o'clock on the dot.

ضابط، ظابط *ẓaabiṭ, ḍaabiṭ* (also *zaabiṭ*) /n pl *ẓubbaaṭ, ḍubbaaṭˀ*/ **1** officer (in the police or the armed services). *ẓaabiṭ iḥtiyaaṭi* reserve officer. ‖ *[mil] ʂaffˈ ẓaabiṭ* non-commissioned officer. - *ẓaabiṭ ɛaẓiim* high-ranking officer (above the rank of major). **2** games master, sports master (in a school, also responsible for discipline). **3** *ẓaabiṭ ʃiiqaaɛ [mus]* drummer.

مظبوط، مضبوط *maẓbuuṭ* (also *mazbuuṭ*) /adj/ **1** exact, in order. *mawaɛiid-u maẓbuuṭa* he is punctual. *ʃiid-u maẓbuuṭa* his hand is sure. *ɛalqa maẓbuuṭa* a sound hiding. - /adverbially/ *bi-yiɛmil fuvl-u maẓbuuṭ* he does his work properly. **2** /invar/ medium-sweet (of Turkish coffee).

اتظبط، اتضبط *ʃitẓabaṭ* or *ʃiẓẓabaṭ* (also *ʃitzabaṭ* or *ʃizzabaṭ*) /vi/ **1** passive of *ẓabaṭ*. **2** to become adjusted, become regular. - ava/iva *mitẓibiṭ*.

انظبط، انضبط *ʃinẓabaṭ, ʃinḍabaṭˀ* = *ʃitẓabaṭ*. - vn *ʃinẓibaaṭ*; ava/iva *minẓibiṭ*.

انظباط، انضباط *ʃinḍibaaṭ* /n/ (military) discipline.

ظبّط، ضبّط *ẓabbaṭ* (also *zabbaṭ*[2]) **1** /vt/ intensive of *ẓabaṭ*. **2** to become surfeited (of the stomach). - vn *taẓbiiṭ*; ava/pva *miẓabbaṭ*.

اتظبّط، اتضبّط *ʃitẓabbaṭ* or *ʃiẓẓabbaṭ* (also *ʃitzabbaṭ*[2] or *ʃizzabbaṭ*[2]) /vi/ passive of *ẓabbaṭ* 1. - iva *mitẓabbaṭ*.

ظ ب ي

ظبي *ẓaby* /n pl *ẓibyaan, ẓibaaʕ*/ gazelle. ‖ *ʃabu ẓaby* Abu Dhabi.

ظ ر ب

ظرب *ẓarab (u)* /vt/ *[coarse]* to excrete (dung, faeces), crap. ‖ *bi-yuẓrubu ɛyaal* ≈ they breed like rabbits! - vn *ẓarb*; ava *ẓaarib*; pva *maẓruub*.

ظ ر ط

ظرط، ضرط *ẓaraṭ (a)* /vi/ to fart, break wind. ‖ *ẓuraaṭ fi-ɢafaṣ [prov]* ≈ much ado about nothing. - vn *ẓarṭ, ẓuraaṭ, ẓaraṭaan*; ava *ẓaariṭ*.

ظرطة، ضرطة *ẓarṭa* /n pl *-aat*/ a fart, a breaking of wind. ‖ *wiẓ-ẓarṭa (fiik)* ≈ I don't give a fig (about you) (in answer to, e.g., a threat). - *ʃinta ya si ẓarṭa* you rotter! - also *ḍarṭa*.

ظرّاط *ẓarraaṭ* /adj * and pl *ẓarraaṭa*/ *[coarse]* voluble but undependable, full of flatulent talk.

أظرط ʕaẓraṭ /el/ worse/worst, lousier/ lousiest. *ʕil-ʕitneen ʕaẓraṭ min baʕḍ* they are as bad as each other.

ظرّط، ضرّط *ẓarraṭ* /vi/ **1** to break wind, fart. ‖*ẓarraṭ-lu* he didn't give a damn about him. **2** *[slang]* to worsen, deteriorate (of circumstances). - also *ḍarraṭ*. - vn *taẓriiṭ*; ava *miẓarraṭ*.

اتظرّط *ʕitẓarraṭ* or *ʕiẓẓarraṭ* /vi/ (impersonal) passive of *ẓarraṭ*. *ḥaqq-ak yitẓarraṭ-lak [coarse]* you should be given short shrift. - also *ʕitḍarraṭ*. - iva *mitẓarraṭ*.

ظ ر ف [1]

ظرف *ẓarf* /n pl *ʕaẓruf, ẓuruuf, ẓurúfa*/ **1** envelope. *ḥuṭṭ il-ʕawraaq fi-ẓarf* put the papers in an envelope. **2** casing (such as a watch case, ball-bearing casing, chuck of a drill, cartridge case, eggcup etc.). — /pl *ẓuruuf* only/ **3** (compelling or unavoidable) circumstance. *gaa-li ẓarf[i] mufaagiʔ* something unexpected turned up (and delayed me). *ẓuruuf muxaffifa* mitigating circumstances. ‖*da b-ẓuruuf-u* that depends on the circumstances. - *xallii-ha b-ẓuruf-ha* (let's) see how things turn out. — /no pl/ **4** duration, period. *fi-ẓarf[i] ʕusbuʕeen* in the space of two weeks.

مظروف *maẓruuf* /n pl *maẓariif*/ envelope (particularly in contexts of tendering). *fatḥ il-maẓariif* the opening of sealed tenders (for comparative study by the appointed committee).

ظرّف *ẓarraf[1]* /vt/ **1** to put in an envelope. *maktab il-wuruud bi-yẓarraf it-tillixrafaat* the reception office puts the telegrams in envelopes. **2** to slip (s.o.) a bribe. - vn *taẓriif*; ava/pva *miẓarraf*.

اتظرّف *ʕitẓarraf[1]* or *ʕiẓẓarraf[1]* /vi/ **1** to be put in an envelope. **2** to be slipped a bribe. - iva *mitẓarraf*.

ظ ر ف [2]

ظرف *ẓurf* /n/ sweetness, agreeableness, cuteness.

ظرافة *ẓaraafa* /n/ agreeableness. *ʕil-bint[i] di ʕaaxir laṭaafa w-ẓaraafa* this girl is extremely pleasant and agreeable.

ظريف *ẓariif* /adj pl *ẓurafa, ẓurafa*/ pleasant, agreeable, delightful. *ʕakalu ʕakla ẓariifa* they ate a nice meal. *kaanit ʕaʕda ẓariifa* it was a pleasant gathering. *manẓar ẓariif* a pleasant sight.

أظرف *ʕaẓraf* /el/ more/most pleasant, agreeable etc.

ظرّف *ẓarraf[2]* /vt/ to smarten up, make attractive. *ʃuf-lak ʃamiiṣ kida yẓarraf-ak wi-yxallii-k ḥilw* find yourself a shirt that will make you look smart and attractive. - vn *taẓriif*; ava/pva *miẓarraf*.

اتظرّف *ʕitẓarraf[2]* or *ʕiẓẓarraf[2]* /vi/ **1** to make oneself socially agreeable. **2** to be made to look attractive and agreeable. - ava/iva *mitẓarraf*.

اتظارف *ʕitẓaarif* or *ʕiẓẓaarif* /vi/ to behave ingratiatingly, make a show of pleasantness. - ava *mitẓaarif*.

استظرف *ʕistaẓraf* **1** /vi/ to behave ingratiatingly, make a show of pleasantness. *ʕil-walad da tamalli b-yistaẓraf ʕal-banaat* that boy is always playing up to the girls. **2** /vt/ to select for attractiveness or pleasantness. - vn *ʕistiẓraaf*; ava/pva *mistaẓraf*.

ظ ف ر see ض ف ر [2]

ظ ل ل see ض ل ل [2]

ظ ل م [1]

ظلم *ẓalam (i)* /vt/ to wrong, deny justice to. *ʕana lli gibt-u l-nafs-i ma-ḥadd[i]-f ẓalam-ni* I brought it on myself, no-one wronged me. *ʕinti b-tiẓlimi l-wiliyya bik-kalaam da* you're maligning the woman by saying that. *ẓalamuu-ni ẓulm il-ḥuseen* they dealt with me as unjustly as Hussein was dealt with (reference is here to the killing of Hussein, the Prophet's grandson, at Karbala in Iraq in 680 AD). - vn *ẓulm*; ava *ẓaalim*; pva *maẓluum*.

ظلم *ẓulm* /n/ injustice. *ʕil-musawaah fiẓ-ẓulm[a] ʕadl [prov]* for everyone to be equally unfairly treated is (a kind of) justice.

ظالم *ẓaalim* /n * and pl *ẓalama*/ wrongdoer, oppressor. *ʕiẓ-ẓaalim wil-maẓluum* the wrong-doer and the wronged. *kull[i] ẓaalim lu yoom* or *liik yoom ya ẓaalim [prov]* the unjust will get their deserts one day.

مظلوم *maẓluum* **1** /pva/ ‖*ya baxt[i] min baat maẓluum wi-ma-bat-ʃ[i] ẓaalim [prov]* ≈ better to be oppressed than be an oppressor. **2** /n pl *maẓaliim*/ victim of oppression. *yaama fil-ḥabs[i] maẓaliim [prov]* ≈ how many are those who are wrongly punished!

أظلم *ʕaẓlam* /el/ more/most unfair to others. *ʕil-baadi ʕaẓlam* the first to do wrong does the greater wrong.

ظلومة *ẓaluuma* /n pl *-aat*/ gross injustice.

مظالم *maẓaalim* /pl n/ wrongs, injustices.

اتظلم *ʕitẓalam* or *ʕiẓẓalam* /vi/ to be wronged, be denied justice. - iva *mitẓilim*.

انظلم *ʕinẓalam* = *ʕitẓalam*. - iva *minẓilim*.

اتظلّم *ʕitẓallim* or *ʕiẓẓallim* /vi/ to make a complaint. *ʕitẓallimu min il-qaraar da* they lodged a complaint against this decision. - ava *mitẓallim*.

تظلّم *taẓallum* /n pl *-aat*/ petition, complaint.

ظ ل م [2] see ض ل م [1]

ظ ن ن

ظنّ *ẓann*[1] *(u, i)* /vt/ to think, believe, suspect. *ʕaẓunn-ak fahim-ni* I think you understand me. *ɛala ma ʕaẓunn* as far as I can tell, I think so. *ẓanneet ḥaaga zayy*[i] *di* I suspected something like that. - vn *ẓann*; ava *ẓaanin*; pva *maẓnuun*.

ظنّ *ẓann*[2] **1** /vn/ ‖ *kaan ɛand*[i] *ḥusn*[i] *ẓann-i (fii)* he did not disappoint me. - *baɛḍ iẓ-ẓann*[i] *ʕism [prov]* to think even a little badly of others is a sin. **2** /n pl *ẓunuun*/ surmise, suspicion. *laɋeet ẓunuun-i f-maḥall-a-ha* I found my suspicions to be well-founded.

ظنّي *ẓanni* /adj/ pertaining to guessing, speculatory.

ظنّان *ẓannaan, ẓannaan* /adj *, pl *ẓannaana, ẓannaana*/ given to thinking the worst of others.

اتظنّ *ʕitẓann* or *ʕiẓẓann* /vi/ (impersonal) passive of *ẓann*[1]. *ma-yitẓann*[i]*-ʃ fii xeer* he is not the type to be thought well of. - iva *mitẓann*.

ظ ه

ظه *ẓah* /fem n, pl *-aat*/ seventeenth letter of the Arabic alphabet. - also *ẓaa, ẓaaʕ*.

[1] ظ ه ر

ظهر *ẓahar (a)* /vi/ **1** to emerge, appear, become visible. *ʕil-ḥagaat illi b-tiẓhar fis-suuɋ* the things that appear on the market. ‖ *ḥubb iẓ-ẓuhuur* love of display, ostentation. **2** *yiẓhar* it seems, it is evident. *yiẓhar in-naḍḍaara ɛagabit-u* evidently the glasses pleased him. — /vt/ **3** to reveal, cause to appear. *rabb-i-na ẓahar il-ḥaɋɋ* our Lord has revealed the truth (said in the context of a vindication). - vn *ẓuhuur*; ava *ẓaahir*.

ظاهر *ẓaahir* /ava/ ‖ *ʕil-ɛaalim biẓ-ẓaahir wil-xafi* (God) the Knower of what is visible and invisible. - *ʕiẓ-ẓaahir (ʕinn)* apparently, it seems (that) ..., as in *ʕiẓ-ẓaahir xadt*[i] *ḍarbit ʃams* it seems I've got sunstroke. - *ḥasab iẓ-ẓaahir* judging by appearances.

ظاهرة *ẓahra*↑, *ẓaahira*↑ /n pl *ẓawaahir*/ manifestation, phenomenon.

ظهورات *ẓuhuraat* /adj invar/ casual, temporary, seasonal (of workers). *ɛummaal ẓuhuraat* casual or seasonal labourers. - /adverbially/ *ʕiʃtaɣal ẓuhuraat* to work as a casual or seasonal labourer.

مظهر *maẓhar* /n pl *maẓaahir*/ appearance, external manifestation. *maẓhar min maẓaahir il-ḥubb* one of the manifestations of love. *bitaaɛ maẓaahir* one who cares only about keeping up appearances.

مظهريّة *maẓhariyya* /n pl *-aat*/ ostentation. *bi-yḥibbu l-maẓhariyya* they like to keep up appearances.

مظهرجي *maẓhargi* /adj * and pl *-yya*/ concerned with outward appearances.

ظهّر *ẓahhar*[2] /vt/ to cause to appear, make visible. *ʕil-maḥluul da bi-yẓahhar il-ḥibr is-sirri* this solution makes the invisible ink appear. - vn *taẓhiir*; ava/pva *miẓahhar*.

اتظهّر *ʕitẓahhar*[2] or *ʕiẓẓahhar*[2] /vi/ to be made to appear, be made visible. - iva *mitẓahhar*.

مظاهرة *muẓahra* /n/pl *-aat*/ demonstration. *muẓahra siyasiyya* a political demonstration.

اتظاهر *ʕitẓaahir*↑ or *ʕiẓẓaahir*↑ /vi/ **1** to make a pretence. *bi-yitẓaahir bil-ɣina* he puts on a show of being rich. **2** to engage in a demonstration. *ʕiṭ-ṭalaba tẓaharu ɋuddaam il-wizaara* the students demonstrated in front of the ministry. - iva *mitẓaahir*.

أظهر *ʔaẓhar*↑ /vt/ **1** to reveal, disclose. *ʔaẓhar li-ɛarust-u l-iftiyaaɋ* he revealed his longing to his bride. **2** *[phot]* to develop (film). - vn *ʕiẓhaar*; ava *miẓhir*.

مظهر *muẓhir* /n/ *[phot]* developer, developing fluid.

[2] ظ ه ر see ض ه ر: *ẓahr, ẓahiir, ẓahhar*[1], *ʕitẓahhar*[1]

ع

ع
ع ʕa- contracted form of ʕala (q.v.).

ع ا ج
عاج ʕaag /n/ ivory.
عاجى ʕaagi /adj/ made of ivory, ivory-like, ivory coloured.

ع ا د see ع و د: ʕaada, ʕaadi

ع ا ر see ع ى ر [1] and ع ى ر [3]: ʕaar[1], ʕaar[2]

ع ا ق see ع و ق: ʕaaqa

ع ا ل [1]
عال ʕaal[1] /adj invar/ fine, splendid, excellent. ʃin faaʃ allaah ḫa-txiff[i] w-tibqa ʕaal God willing, you'll get better and be fine. ʃid-dukkaana tʕarafit wi-baqa-lha zabaayin ʕaal the shop became known and gained a fine clientele. naas ḫilwiin mil-ʕaal people of the very best sort. w-allaahi ʕaal win-nabi what a fine mess! ‖ʕaal il-ʕaal first class, A1. -/adverbially/ bi-yiktib ʕaal he writes superbly. see further under ع ل ى

ع ا ل [2] see ع و ل: ʕaala

ع ا م see ع م م [1] and ع و م [2]: ʕaam[1], ʕaam[3]

ع ا ن see ع و ن: ʕaana

(ع ا ه)
عاهة ʕaaha /n pl -aat/ physical handicap, disability. kullu zii ʕaahatin gabbaar [prov] every person with a physical defect has a cruel streak.
عاه ʕaah /interj/ sound made to urge on cows.

ع ب ا ل see ب ل ى [2]: ʕa-baal

ع ب ء [1] see also ع ب و
عبء ʕibʔ /n/ burden, load.
عبّأ ʕabbaʔ /vt/ [mil] to mobilize. ‖ʕabbaʔ guhuud-ak mobilize all your efforts, do your utmost. -vn taʕbiʔa; ava/pva miʕabbiʔ; pva mùʕabbaʔ.
تعبئة taʕbiʔa /n/ mobilization. ʃit-taʕbiʔa l-ʕamma general mobilization.
اتعبّأ ʃitʕabbaʔ /vi/ to be mobilized. -iva mitʕabbaʔ.

ع ب ء [2] see ع ب ى

ع ب ب
عبّ ʕabb (i) /vt/ to gulp down (a liquid, usually from a bowl or the like). -vn ʕababaan; ava ʕaabib.
عبّ ʕibb /n/ space between garment and chest. ‖fataḫ luhum ʕibb-u he encouraged them (to do mischief). -waaxid kull[a] ḫaaga f-ʕibb-u he has everything in the bag, under his control. -ʃil-faar liʕib fi-ʕibb-i I got worried. -tiff[i] f-ʕibb-ak count yourself lucky! -ʃabu ʕibb [non-Cairene] a greedy man. 2 [non-Cairene] area. ʃil-ʕibb iʃ-ʃarqi nizraʕ-u qamḫ in the eastern sector we'll plant wheat.

ع ب ث see ع ب س [2]

ع ب د
عبد ʕabad (u, i) /vt/ to worship, adore. -vn ʕibaada; ava ʕaabid; pva maʕbuud.
عبادة ʕibaada /n pl -aat/ act of worship or devotion.
عابدين ʕabdiin /prop n/ district of east central Cairo known particularly for the palace of the same name.
المعبود ʃil-maʕbuud /n/ the Deity.
عبد ʕabd /n/ 1 /pl ʕabiid/ 1a slave. ma-yiqbal-ʃ

il-hawaan ɣeer il-ɛabiid only slaves accept degradation. ‖ *ʃil-ɛabd il-ɣalbaan* poor me. - *ʃil-ɛabd[i] li-llaah* unworthy me. **1b** /n in constr/ (literally: the slave of ...) form used with divine epithets etc. in given names for men, as *ɛabd il-ɛaziiz, ɛabd if-fahiid* etc. (also contracted to *ɛab-* as *ɛab-waduud* for *ɛabd il-waduud*). ‖ *ɛabd-u* (literally) His slave, used (1) as a given name. (2) as a shortened form of any of the names of the *ɛabd* type. *-faayil ɛabd il-ɋaadir* ≈ carrying the cares of the world on his shoulders, in a gloomy mood. **2** negro. ‖ *raas il-ɛabd* long-handled brush used for dusting ceilings. — /pl *ɛibaad*/ **3** mortal man. *ʃil-ɛabd[i] ma-yiɛraf-ʃ il-lutf* mortal man knows nothing of mercy.

عبدة *ɛabda* /n pl *-aat*/ **1** female slave. **2** negro woman or girl.

عبوديّة *ɛubudiyya* /n/ slavery.

عبيد *ɛibeed* /prop n/: *zeed wi-ɛbeed* ≈ Tom, Dick and Harry. *huwwa-na ɦ-asmaɛ kalaam zeed wi-ɛbeed* am I to listen to what just anybody says?

عبّاد *ɛabbaad* /n */ worshipper. ‖ *ɛabbaad if-ʃams* sunflower.

معبد *maɛbad* /n pl *maɛaabid*/ temple. *maɛbad yahuudi* synagogue.

اتعبّد *ʃitɛabbid* /vi/ to behave piously or devoutly. - vn *taɛabbud*; ava *mitɛabbid*.

استعبد *ʃistaɛbid* /vt/ to enslave, treat as a slave. - vn *ʃistiɛbaad*; ava *mistaɛbid*.

استعباد *ʃistiɛbaad* /n/ enslavement.

ع ب د ل –

عبدلاوى *ɛabdillaawi* /n/ orange melon (Cucumis chate).

ع ب ر [1]

عبر *ɛabar (u)* /vt/ to cross. *ʃig-geef ɛabar il-ɋanaal* the army crossed the Canal. - vn *ɛubuur*; ava *ɛaabir*.

عبور *ɛubuur* /n/ crossing. *ɛubuur muʃaah* pedestrian crossing. *maɛrakit il-ɛubuur* the battle of the crossing of the Suez Canal (in October 1973).

عبرة *ɛibra* /n pl *ɛibar*/ **1** lesson, example. *di ɛibra yibɛat-ha-lna rabb-i-na ɛaʃaan niɛtibir biiha* this is a lesson sent by our Lord for us to learn from. *ɦikayt-u ɛibra l-ɣeer-u ɛala ţuul il-ʃayyaam* his story is an example to others for all time. ‖ *ɦalt-u ɛibar* he's in a bad way, he is in a pathetic state. *- dool ɛibar iz-zamaan* those are the sort of riff-raff one gets nowadays. **2** criterion. *ʃil-ɛibra ɦa-tkuun bi-ɛadad ʃafraad il-ʃusra* the criterion will be the size of the family. — /no pl/ **3** underlying purpose, aim. *ʃeeh il-ɛibra min ɛamayl-ak di* what's behind these (disagreeable) actions of yours?

عبارة *ɛibaara* /n/ **1** /pl *-aat*/ expression, phrase. *ɛibaara maʃhuura* a well-known expression. *ɛibaraat musiqiyya* musical phrases. **2** *ʃil-ɛibaara* the matter, the issue. *ʃeeh il-ɛibaara* what's the matter? what's up? *di mif il-ɛibaara* that's not the point at issue. *ʃil-ɛibaara mif bil-filuus laakin bil-ʃaxlaaɋ* it is not money but manners that are at issue. *ya sana sooda hiyya l-ɛibaara wişlit lil-xinaaɋ* heavens! have things got to the point of fighting?

¶ *ɛibaara ɛan* tantamount to, something approaching. *bi-yibɋa ɛbaara ɛan ɛasal* it becomes like honey. *da ɛbaara ɛan daftar ʃism-u l-ʃustaaz* it is a sort of register called the master ledger. *ʃil-filtar ɛibaara ɛan waraɋa* the filter is (just) a piece of paper.

عبير *ɛabiir* /n/ aroma, scent.

عبّارة *ɛabbaara* /n pl *-aat, ɛababiir*/ **1** footbridge, gangplank. **2** = *ɛabbuura* (see Pl.E, 17).

عبّورة *ɛabbuura, ɛabbuura* /n pl *ɛababiir*/ secondary irrigation ditch (see Pl.E, 17).

عبّر *ɛabbar* /vt/ **1** to show consideration or respect for, heed. *ʃana ʃeeh yaɛni ɛalaʃaan ma-trudd[i]-ʃ ɛalayya wala tɛabbar-ni* what do you take me for that you don't answer me or pay me any attention? *b-aɛabbar-u big-gazma* I think he's as worthless as a shoe! **2** to measure. *ɛabbar il-ɋamḥ[i] wil-ɋumaaf* he measured the wheat and the cloth. - vn *taɛbiir*; ava *miɛabbar*.

¶ *ɛabbar ɛan* to express, be expressive of. *malaabis bi-tɛabbar ɛan il-ɛaşr* clothes which are expressive of the times.

تعبير *taɛbiir* /n pl *-aat, taɛabiir*/ expression, phrase.

تعبيرى *taɛbiiri†* /adj/ pertaining to expression or style. *ʃaxţaaʃ it-ţaalib min in-naḥya t-taɛbiriyya* the student's stylistic mistakes.

التعبيريّة *ʃit-taɛbiriyya* /n/ *[art]* Expressionism.

اتعبّر *ʃitɛabbar* /vi/ passive of *ɛabbar*. - iva *mitɛabbar*.

اعتبر *ʃiɛtabar* **1** /vt/ to think of, consider. *ʃana b-aɛtibr-ak zayy[i] ʃaxuu-ya* I think of you as my brother. *ɦ-aɛtibir ɛadam migiyy-ak maɛaana ʃinnak fiɛlan ma-ɮḥibb[i]-nii-ʃ* I'll take your not coming with us as a sign that you really don't love me. - /the literary passive form occurs even in unelevated speech/ *hiyya ʃaşnaaf ɋadiima w-tuɛtabar tuḥaf* they're old sorts and regarded as antiques. **2** /vi/ to learn a lesson, take heed. *ma-b-yiɛtibruu-ʃ bi-lli b-yiḥşal* they don't learn from what happens. - vn *ʃiɛtibaar*; ava *miɛtibir*; pva *muɛtabar*.

اعتبار *ʃiɛtibaar* /n pl *-aat*/ **1** regard, consideration. *ɛaʃaan l-iɛtibaraat di* because of these considerations. ‖ *maɛa* (or *ɛala*) *ɛtibaar* taking into consideration, as in *maɛa ɛtibaar muddit il-ɦabs* with consideration being

given to the period of detention, *ɛala ɛtibaar ʃinnu miʃ ħa-yiigi* since he will not be coming. - *bi-ɛtibaar* in the capacity of, as in *bi-ɛtibaar-i mudiir* in my capacity as director, *wi-bi-ɛtibaar ʃinn[i] da l-ʃasaas* ... and that being the basis .... 2 standing, good standing. *ma-luu-ʃ iɛtibaar* he is of no consequence. *ʃitradd iɛtibaar-u* (1) his good standing was restored. (2) *[leg]* the conviction was erased from his record.

اعتبارى *ʃiɛtibaari* /adj */ pro-forma, for the sake of appearances.

معتبر *muɛtabar* /adj */ 1 respected, highly regarded. 2 of good quality. *ṣuuf muɛtabar* good quality wool.

استعبر *ʃistaɛbar↓* /vi/ to learn a lesson. *laazim ʃabuu yiḍrab-u ɛaʃaan yistaɛbar* his father should give him a beating to teach him a lesson. - ava *mistaɛbar*.

ع ب ر [2]

عبرى *ɛibri* 1 /adj */ Hebrew. 2 /n/ the Hebrew language.

ع ب س [1]

عبسى *ɛabsi* /n pl *ɛabaysa*/ tumbler pigeon of a type distinguished by its black body and white tail.

عبس *ɛabas[1]*: *ʃiħna b-niɣra f-ṣuurit ɛabas* (or *f-ʃabu ɛabas*) ≈ how many times do we have to go over the matter before you get it into your head?

عبوس *ɛabuus* /adj/ grim, stern, austere.

عبوس *ɛubuus* /n/ grimness of countenance.

عبّاسى *ɛabbaasi* /adj */ Abbasid.

العبّاسيّة *ʃil-ɛabbasiyya* /prop n/ district of north-east Cairo known in particular for its army barracks and lunatic asylum.

عبّاسيّة *ɛabbasiyya* /adj invar/ cuckoo, crazy. *ʃir-raagil da ɛabbasiyya* that man is cuckoo.

عبّس *ɛabbis* /vi/ to frown, scowl, glower. - ava *miɛabbis*.

ع ب س [2]

عبث *ɛabas[2]* /n/ triviality, jest, joke.

¶ *ɛabasan* /adv/ in vain, to no avail.

ع ب ط [1]

عبط *ɛabaṭ[1]* /n/ simple-mindedness, silliness, foolishness.

أعبط *ʔaɛbaṭ* /el/ more/most foolish, silly etc.

عباطة *ɛabaaṭa* /n/ simple-mindedness, silliness. *bi-ysuuq il-ɛabaaṭa (ɛal-habaala)* he plays the fool.

عبيط *ɛabiiṭ* /adj pl *ɛubaṭa*/ simple-minded, silly. *bi-yiɛmil ɛabiiṭ* he acts stupid. *ṭawiil wi-ɛabiiṭ* tall and silly. *ʃil-ɛabiiṭ ʃaħú [children]* here comes the fool! (a teasing chant).

عبّطى *ɛubbeeṭi* /adv/ without forethought, without proper consideration.

عبّط *ɛabbaṭ[1]* /vt/ to fool, dupe, take in. - ava *miɛabbaṭ*.

اتعبّط *ʃitɛabbaṭ[1]* /vi/ to be fooled, be duped, be taken in. - iva *mitɛabbaṭ*.

اتعابط *ʃitɛaabiṭ* /vi/ to act the fool, play dumb. - ava *mitɛabbiṭ*.

اعتباطى *ʃiɛtibaaṭi↑* /adv/ haphazard.

استعبط *ʃistaɛbaṭ* 1 /vt/ to consider stupid. *bi-tistaɛbaṭ-ni walla ʃeeh* do you take me for a fool or what? 2 /vi/ to act stupid, play the fool. *ʃistaɛbaṭ wi-ɛamal nafs-u ma-ʃaf-haa-ʃ* he acted stupid and made out he hadn't seen her. *ʃinta ɛabiiṭ walla b-tistaɛbaṭ* are you (really) stupid or (just) acting stupid? - vn *ʃistiɛbaaṭ*; ava *mistaɛbaṭ*.

ع ب ط [2]

عبط *ɛabaṭ[2] (u)* /vt/ to hold (s.o.) with one's arms, hug. - vn *ɛabṭ*; ava *ɛaabiṭ*; pva *maɛbuuṭ*.

عبط *ɛubṭ* /n/ embrace, hug. *xad-ni bil-ɛubṭ* he hugged me.

اتعبط *ʃitɛabaṭ* /vi/ to be held with arms, be hugged. - iva *mitɛibiṭ*.

انعبط *ʃinɛabaṭ* = *ʃitɛabaṭ*. - iva *minɛibiṭ*.

عبّط *ɛabbaṭ[2]* /vi/ to hug vigorously. *ɛabbaṭ fiyya* he gave me a big hug. - ava/pva *miɛabbaṭ*.

اتعبّط *ʃitɛabbaṭ[2]* /vi/ (impersonal) passive of *ɛabbaṭ[2]*. *ʃid-diriksiyoon ma-yitɛabbaṭ-ʃ[i] fii kida* the steering-wheel is not to be hugged like that! - iva *mitɛabbaṭ*.

ع ب ع ب

عبعب *ɛabɛab* 1 /vt/ to cram, stuff. 2 /vi/ to become stuffed full, bulge. - vn *ɛabɛaba*; ava/pva *miɛabɛib*.

¶ *ɛabɛab min* to be fed up with, to be sick and tired of.

معبعب *miɛabɛib* /adj/ baggy, stretched out of shape.

اتعبعب *ʃitɛabɛab* /vi/ to be crammed; be stuffed. - iva *mitɛabɛib*.

¶ *ʃitɛabɛab min* = *ɛabɛab min*.

ع ب ق

عبق *ɛabaq (u)* /vi/ 1 to be pervaded (with a smell, smoke, fumes etc.). 2 to accumulate in a confined space (of smoke, fumes etc.). - vn *ɛabq, ɛabaqaan*; ava *ɛaabiq*.

عبقة *ɛabqa* /pl *-aat*/ instance noun of *ɛabq*.

عبّق *ɛabbaq* 1 /vt/ to pervade (of smoke, fumes etc.). *ʃil-beet miɛabbaq min riiħit il-ʃakl* the whole house smells of food. *ʃid-duxxaan ɛabbaq il-ʃutubiis* the smoke filled the bus. – /vi/ 2 to become full of smoke, fumes etc. 3 to accumulate in a confined space (of

smoke, fumes etc.). - vn *taɛbiiq*; ava/pva *miɛabbaq*.
تعبيقة *taɛbiiqa* = *ɛabqa*.
اتعبّق *ʔitɛabbaq* /vi/ to be pervaded (with smoke, fumes etc.). - iva *mitɛabbaq*.

ع ب ق ر
عبقرى *ɛabqari* /* and pl *ɛabaqra*/ **1** /adj/ ingenious. **2** /n/ genius. *zaman il-ɛabaqra* the age of geniuses.
عبقريّة *ɛabqariyya* /n/ genius, ingenuity.

ع ب ك
عبك *ɛabak* /n/ heavy, close-textured kind of cotton cloth used as a lining in upholstery and for poor-quality clothes.

ع ب ل [1]
عبل *ɛabal* /n/ **1** filth, grime. *waaḥid bi-ɛabal-u* a crude unrefined person. **2** /coll/ black poplar(s).
عبلة *ɛabala* /unit n, pl *-aat*/ a black poplar.

ع ب ل [2]
عبلة *ɛabla* /prop n/ Abla, heroine of folk-epic and beloved of *ɛantar* (q.v.).

ع ب و see also ع ب ء [1]
عبوّة *ɛubuwwa* /n pl *-aat*/ **1** pack, package, (full) container. *milabbis maḥṭuuṭ fi-ɛubuwwaat ʔaʃkaal muxtalifa* sugared almonds packed in various kinds of containers. **2** capacity (of a container).
عبّى *ɛabba* /vt/ **1** to pack, load or pour (into a container). *nigmaɛ il-quṭn[i] bil-yadd[i] wi-nɛabbii fi-kyaas* we gather the cotton by hand and pack it in sacks. **2** to fill, pack (a container with s.th.). *ɛabbi l-banaadiq* load the rifles! ‖ *ɛabbaa-ha bil-kalaam ɛanhum* he filled her ears with talk against them (and so made her angry with them too). - vn *taɛbiyya*; ava/pva *miɛabbi*.
اتعبّى *ʔitɛabba* /vi/ **1** to be packed, loaded or poured (into a container). **2** to be filled, be packed (of a container). - iva *mitɛabbi*.

ع ب ى
عباية، عباءة *ɛabaaya* /n pl *-aat, ɛiby*/ sleeveless woollen robe (usually black) worn by men over a galabiya (see Pl.F, 18).

ع ت ب [1]
عتب *ɛitib (a), ɛatab[1] (i)* /vi/ to remonstrate gently, offer mild criticism. *ʔumm-u ɛatabit ɛalee lamma laqit-u ma-bi-yzakir-ʃ* his mother reproached him when she discovered that he did not study. - vn *ɛatab*; ava *ɛaatib*.
عتبان *ɛatbaan* /adj */ reproachful, mildly reproving, gently critical.
عتب *ɛatab[2]* /n/ cause of reproach. *ʔil-ɛatab ɛala* ... it's ... that's to blame, as in *ʔil-ɛatab ɛas-sinn* it's age that's to blame, *ʔil-ɛatab ɛan-naẓar* it's (poor) sight (or lack of insight) that's to blame.
عاتب *ɛaatib* /vt/ to rebuke gently, reproach. *ɛaatib ṣaḥb-u ɛala lli ṣadar minnu* he reproached his friend for what he'd done. - vn *ɛitaab, miɛatba*; ava *miɛaatib*.
عتاب *ɛitaab* /n/ reprehension, reproach, rebuke, reprimand.
اتعاتب *ʔitɛaatib* /vi/ **1** to reproach one another. *ʔitɣablu wi-tɛatbu wi-tṣalḥu* they met, discussed what they had against each other and made up. **2** to be reproached. *ʔis-sakraan la yitɛaatib wala yitlaam* there is no point in remonstrating with or reproaching a drunk (for what he does). - ava/pva *mitɛaatib*.

ع ت ب [2]
عتب *ɛatab[3]* /coll n/ upper or lower support beams of door- or window-cases, lintels, thresholds, sills.
عتبة *ɛataba* /unit n, pl *-aat, ʔaɛtaab*/ an upper or lower support beam of a door-or window-case, a lintel, a threshold, a sill. ‖ *ʔil-beet bi-yitɛirif min ɛatabt-u [prov]* (a house is known by its threshold) ≈ the first impression tells all. - *ʔaqdaam wi-ʔaɛtaab* see *qadam*.
العتبة *ʔil-ɛataba* (also *ʔil-ɛataba l-xaḍra*) /prop n/ Ataba, a large square and the surrounding area in north-east Cairo.
عتّب *ɛattib* /vt/ to cross the threshold of, enter (a house). - vn *taɛtiib*; ava/pva *miɛattib*.

ع ت ت
عتّ، عتّ *ɛatt (i)* /vi/ **1** to become damaged by moths. **2** to deteriorate (of cloth) through long storage. - vn *ɛatataan*; ava *ɛaatit*.
عتّة، عتّة *ɛitta* /coll n, pl *ɛitat*/ clothes-moth(s).

ع ت د
عتيد *ɛatiid* /prop n/ *[Isl]* angel reputed to accompany one through life, stationed on one's left-hand side, to record one's evil deeds (cf *raqiib*).

ع ت ر [1]
عتر *ɛitir (a)* /vi/ **1** to trip. *ɛitir fig-gibba* he tripped on his robe. **2** to happen (across s.th.), light (upon s.th.). *ɣallib fil-waraɣ li-ḥadd[i] ma ɛitir fiṭ-ṭalab bitaaɛ-i* he riffled through the papers till he came across my

application. *fiḍilt adawwar li-ḥadd[i] ma ɛtirt[i] f-bint il-ḥalaal* I went on looking till I found Miss Right. *ɛitirt[a] ɛala baqqaal kuwayyis* I found a good grocer. - vn *ɛataraan*; ava *ɛaatir*.

عترة، عثرة *ɛatra* /n pl *-aat, ɛataraat*/ a false step, a trip, a stumbling. *rabb-i-na yikfii-ku farr[a] ɛatraat iz-zamaan [beggars]* may God protect you from falling on bad times.

عثّر، عتّر *ɛattar* /vt/ **1** to cause to stumble. **2** to cause to happen (across s.th.). *ʃaxuu-ya ɛattar-ni fiiha* my brother told me where to find her. - ava/pva *miɛattar*.

ع ت ر [2]

عترة *ɛitra↓* /adj invar/ **1** gallant, chivalrous and courageous. **2** strong.

ع ت ر [3]

see ع ط ر : *ɛitr*

ع ت ر س

عترس *ɛatras* /vi/ to resist, balk. *ʃil-baab miɛatras* the door is stuck. - vn *ɛatrasa*; ava *miɛatras*.

عتريس *ɛatriis* /adj */ obdurate.

ع ت ق [1]

عتق *ɛataq (a)* /vt/ **1** to leave be, leave in peace. *ʃiɛtaq-ni y-aaba* stop pestering me, Dad (to, e.g., a beggar). ‖*da ma-yiɛtaq-f[i] wala waḥda* he leaves no woman intact. **2** to release, set free, emancipate (e.g., a slave). - vn *ɛataqaan, ɛitq*; ava *ɛaatiq*; pva *maɛtuuq*.

عتقة *ɛatqa* /inst n, pl *-aat*/ a release, an emancipation.

عاتق *ɛaatiq↑* /n/ shoulder. ‖*ɛala ɛaatiq* within the responsibility of.

عتقي *ɛutaqi[1]* /n pl *-yya*/ **1** reciter of the *ɛitaaqa*, a *fiqi* of the lowest sort. **2** base scavenging type, one always on the look-out for a free meal.

عتاقة *ɛitaaqa* /n pl *-aat*/ recitation of prayers and Koranic verses by a *fiqi*, intended to obtain forgiveness of sin for the deceased.

اتعتق *ʃitɛataq* /vi/ **1** to be left alone, be left in peace. **2** to be released, be set free, be emancipated. - iva *mitɛitiq*.

أعتق *ʃaɛtaq↑* /vt/ to release, set free, emancipate. - ava *miɛtiq*.

ع ت ق [2]

عتقي *ɛitqi* /adj/ old, mature.

عتقي *ɛutaqi[2]* /n pl *-yya*/ *[deris]* repairer of old worn-out footwear.

عتيق *ɛatiiq* /adj/ ancient (of inanimate things). ‖*maṣr il-ɛatiiqa* Old Cairo.

عتيقة *ɛatiiqa* /n pl *ɛataaqi*/ old hen, laying hen over two years old. ‖*ʃid-dihn[i] fil-ɛataaqi [prov]* (it's the old hens that have the fat) ≈ the best wine comes out of old bottles. - *ʃibn il-ɛatiiqa [abus]* ≈ son of a bitch.

عتّق *ɛattaq[1]* **1** /vt/ to leave (e.g., wine) to age and mature. **2** /vi/ to age and mature (of wine, people etc.). - vn *taɛtiiq*; ava/pva *miɛattaq*.

اتعتّق *ʃitɛattaq[1]* /vi/ to be left to age and mature. - iva *mitɛattaq*.

ع ت ق [3]

عتّق *ɛattaq[2]* /vt/ to load (e.g., a cart) and secure the load with ropes. - vn *taɛtiiq*; ava/pva *miɛattaq*.

اتعتّق *ʃitɛattaq[2]* /vi/ to be loaded (of a cart). - iva *mitɛattaq*.

ع ت ل

عتل *ɛatal[1] (i)* **1** /vt/ to carry, bear. *ma-tiɛtil-f[i] hamm* don't worry. **2** /vi/ to groan from exhaustion. - vn *ɛatalaan, ɛatl*; ava *ɛaatil*; pva *maɛtuul*.

عتلة *ɛatla* /n pl *-aat*/ **1** instance noun of *ɛatl*. **2** load, burden.

عتل *ɛatal[2]* /coll n/ lever(s), crowbar(s).

عتلة *ɛatala* /unit n, pl *-aat, ɛataayil*/ a lever, a crowbar.

عتالة *ɛitaala* /n/ burden, load to be carried.

عتّال *ɛattaal* /n * and *ɛattaala*/ one who loads and unloads trucks, porter, carrier.

اتعتل *ʃitɛatal* /vi/ to be carried, be borne (especially of worry). *da walad kuwayyis ma-yitɛitil-luu-ʃ hamm* he's a good boy, one doesn't need to worry about him. - iva *mitɛitil*.

عتّل *ɛattil* /vt/ to carry (a number of things, or a number of times). - vn *taɛtiil*; ava/pva *miɛattil*.

اتعتّل *ʃitɛattil* /vi/ passive of *ɛattil*. - iva *mitɛattil*.

ع ت م

عتمة *ɛatma, ɛatama* /n/ darkness.

عتيم *ɛitim* /adj/ dark.

عتّم *ɛattim* **1** /vt/ to darken. **2** /vi/ to grow dark. *ʃid-dinya mɛattima* it has become dark. - vn *taɛtiim*; ava/pva *miɛattim*.

اتعتّم *ʃitɛattim* /vi/ to be darkened. - iva *mitɛattim*.

ع ت ه

عته *ɛatah* /n/ idiocy.

معتوه *maɛtuuh* /n * and pl *maɛatiih*/ simpleton, idiot, madman.

انعته *ʃinɛatah* /vi/ to become mad, lose one's mind.

ع ت و ل

عتويل *ɛatwiil* /adj pl *ɛatawla*/ veteran, expert, very ex-

perienced. ‖ *(firqit) il-ʕatawla* the National Club football team.

ع ث ث see ع ت ت

ع ث ر see ع ت ر [1]

ع ث م see ع س م

ع ج ب

عجب *ʕagab[1] (i)* /vt/ to please, be pleasing to. *ʔin-naḍḍaara ʕagabit-u* he liked the glasses. *taʕaala f-ʔayy[i] waqt[i] yiʕgib-ak* come any time you please. *fasaxit xuṭubit-ha ʕaʃaan il-ʕariis miʃ ʕagib-ha* she broke off her engagement because the suitor didn't appeal to her. *ʔilli ma-yiʕgib-uu-ʃ yiwzin barra* ≈ if you are not satisfied go somewhere else! ‖ *ma-yiʕgib-uu-ʃ il-ʕagab (wala ṣ-ṣiyaam fi-ragab) [prov]* (he is pleased neither by wonders nor even by fasting in Ragab) ≈ he is the sort who will always find something to disapprove of, even in the most remarkable things. - vn *ʕagab*; ava *ʕaagib*.

عجب *ʕagab[2]* /n/ **1** wonder, amazement. ‖ *ya lil-ʕagab* good gracious! **2** /coll/ amazing things, prodigious things. *ʔana ʃuft il-ʕagab* I saw incredible things.

عجبة *ʕagaba* /n/ a wonder, a curiosity, an astonishing thing.

عجب *ʕugb↑* /n/ pride, conceit, vanity.

أعجب *ʔaʕgab[1]* /el/ more/most astonishing, strange etc.

عجيب *ʕagiib* /adj/ wondrous, amazing, strange. *naas mutaṣawwifa labsiin ʔalwaan ʕagiiba* Sufis wearing odd colours. *manẓar ʕagiib* an amazing sight.

عجيبة *ʕagiiba* **1** /n pl *ʕagaayib*/ marvel, strange happening. ‖ *ʕagaayib ʕaleeki ya dunya* what a strange world! **2** /interj/ strange! odd! *ʕagiiba - di lissa kaanit waqfa gambi min sanya waḥda* funny! she was standing next to me just a second ago.

أعجوبة *ʔuʕguuba* /n pl *ʔaʕagiib*/ wonder. *ʔuʕguubit il-ʕagaayib illi ʃuft-a-ha* the strangest thing I ever saw.

اتعجّب *ʔitʕaggib* /vi/ to wonder, be amazed. *miraat-i kaanit titʕaggib minni* my wife used to wonder at me. - vn *taʕaggub*; ava *mitʕaggib*.

تعجّب *taʕaggub* /n/ astonishment. ‖ *ʕalaamit it-taʕaggub* exclamation mark.

اتعاجب *ʔitʕaagib* /vi/ to behave conceitedly. *bi-titʕaagib bi-gamal-ha* she makes a parade of her beauty. - ava *mitʕaagib*.

أعجب *ʔaʕgab[2]↑* /vt/ to please, arouse the admiration of. *ʔana muʕgab bi-fuṷl-ak* I am pleased with (or: I admire) your work. - /the literary passive occurs/ *ʔuʕgib bi-nafs-u* he became conceited. - vn *ʔiʕgaab*; ava *muʕgib*; pva *muʕgab*.

معجب *muʕgab* /n */ admirer. *ʕandaha muʕgabiin kitiir* she has many admirers. *muʕgabiin koora* soccer fans.

معجباني *miʕgibaani↓* /n pl *-yya*/ wondrous person. *mabruuk ʕaleek ya miʕgibaani ya ṛaali* congratulations you (bridegroom) with your head in the air! (from a wedding song).

استعجب *ʔistaʕgib* /vi/ to be astonished. *ʔana kunt[i] b-astaʕgib min razalit-ha* I used to be amazed at her insolence. - ava *mistaʕgib*.

[1] ع ج ج

عجّ *ʕagg (i)* /vt/ to hit (especially on the back). ‖ *ʕagg id-dunya f-baʕḍ-a-ha* he set everyone against everyone else. - vn *ʕagagaan, ʕagg*; ava *ʕaagig*; pva *maʕguug*.

عجّة *ʕagga* /pl *-aat*/ instance noun of *ʕagg*.

اتعجّ *ʔitʕagg* /vi/ to be hit, be given a blow. - iva *mitʕagg*.

[2] ع ج ج

عجّة *ʕigga* /n pl *-aat, ʕigag*/ firm sort of omelette, thickened with flour, usually about an inch thick and with a filling of vegetables or meat.

[1] ع ج ر

عجر *ʕagr* /adj invar/ *[rur]* unripe (of fruit or vegetables).

أعجر *ʔaʕgar* /adj, fem *ʕagra*, pl *ʕugar, ʕugr*/ crude, uncouth.

[2] ع ج ر see ع ج ج و ر : *ʕagguur*

[3] ع ج ر see ع ج ى ر : *ʕagiir*

ع ج ج و ر

عجّور *ʕagguur* (also *ʃammaam ʕagguur*) /coll n/ hairy cucumber melon(s) (Cucumis melo var. chate).

عجّورة *ʕagguura* /pl *-aat*/ unit noun of *ʕagguur*.

عجّورايا *ʕagguraaya* = *ʕagguura*.

ع ج ر ف

عجرفة *ʕagrafa* /n/ arrogance.

معجرف *miʕagraf* /adj */ arrogant.

اتعجرف *ʔitʕagraf* /vi/ **1** to become arrogant. **2** to behave arrogantly. - ava *mitʕagraf*.

ع ج ز

عجز *ʕigiz (a)* /vi/ to fail, become incapable. *ʕigiz ʔinnu*

yiwṣal-lu he was unable to reach it. *ʕana ɛaagiz ɛan iʃ-ʃukr* I can't thank you enough. ‖ *ʕin ʃa-lla yiɛgaz fi-ɛeen-u w-ɛafiit-u [women]* may he become blind and sick! - vn *ɛagz*; ava *ɛaagiz*.

عجز *ɛagz* /n pl *ɛuguzaat*/ **1** shortage, deficiency, deficit. **2** disability, inability, incapacity. *ɛagz[i] kulli* total disability.

عاجز *ɛaagiz* /n pl *ɛagaza*/ disabled person, incapacitated person (whether deaf, blind, crippled or otherwise afflicted). *ɛaagiz naẓar* blind.

العواجز *ʔil-ɛawaagiz* /pl n/: *ʔumm il-ɛawaagiz* the mother of those who cannot look after themselves (i.e. the poor, the old, the incapacitated) (epithet of Sayyida Zaynab).

عجز *ɛagaz* /n/ old age, infirmity.

عجوز *ɛaguuz* /adj pl *ɛawagiiz, ɛagaayiz*/ old, elderly, aged. *malgaʔ ɛagaayiz* old people's home. ‖ *ʔibrit il-ɛaguuz* nettle(s). - *bard il-ɛaguuz* (or *il-ɛaguuza*) the first eight days of the month of Amshir, noted for their bitter cold. - *ɛayy[i] ɛagaayiz il-faraḥ - ʔaḳl[i] w-naqwara [prov]* like old biddies at a wedding - eating and criticizing.

العجوزة *ʔil-ɛaguuza* /prop n/ district of Guiza on the bank of the Nile.

معجزة *muɛgiza* /n pl *-aat*/ miracle.

عجّز *ɛaggiz* /vt/ **1** to incapacitate, cripple. *ʔiddaa-li suʔaal ɛaggiz-ni* he posed me a question that nonplussed me. — /vi/ **2** to grow old. *ʕana ɛaggizt[i] xalaaṣ* I'm past it. **3** to fall short. *ʔil-mizaniyya ɛaggizit* the budget showed a deficit. *ʔil-filuus ɛaggizit maɛaaya f-ʃahr-i-da* I have run out of money this month. *ʔil-qumaaʃ ɛaggiz* the cloth wasn't enough. - vn *taɛgiiz*; ava/pva *miɛaggiz*.

اتعجّز *ʔitɛaggiz* /vi/ to be incapacitated, be crippled. - iva *mitɛaggiz*.

ع ج ل [1]

عجل *ɛagal[1]* /n/ haste. *bil-ɛagal* or (less commonly) *ɛalaʔ ɛagal* quickly.

عجلة *ɛagala[1]* /n/ haste, hurry. *raagil ɛandu ɛagala* a hasty man. ‖ *fil-ɛagala n-nadaama [prov]* ≈ haste makes waste. - *ʔil-ɛagala min if-fiṭaan [prov]* haste comes from the Devil.

عجول *ɛaguul* /adj */ hasty.

عاجل *ɛaagil* /adj */ urgent, fast. ‖ *xayru l-birri ɛaagil-u [prov]* ≈ he gives twice who gives quickly.

عجّل *ɛaggil* **1** /vt/ to hasten, hurry (s.th. or s.o.) up, expedite. **2** /vi/ to be in haste, hurry. - vn *taɛgiil*; ava/pva *miɛaggil*.

اتعجّل *ʔitɛaggil* **1** /vt/ to hasten, hurry (s.th. or s.o.) up. — /vi/ **2** to hurry, make haste. **3** to be hurried up, be expedited. - ava/iva *mitɛaggil*.

استعجل *ʔistaɛgil* **1** /vt/ to speed up, hurry. *ʔil-garsuun istaɛgil iṭ-ṭalabaat* the waiter speeded up the orders. **2** /vi/ to make haste, be in a hurry. *ʔiʃmiɛna ḥa-nistaɛgil ɛala ʔaaxir iz-zaman* why should we hurry now after all this time? *ʔiz-zabaayin dayman mistaɛgiliin* the customers are always in a hurry. - vn *ʔistiɛgaal*; ava/pva *mistaɛgil*.

مستعجل *mistaɛgil* /adj */ **1** urgent. *fuɤla mistaɛgila* an urgent job. **2** express (of post etc.).

ع ج ل [2]

عجل *ɛagal[2]* /coll n/ **1** wheel(s). **2** cycle(s), (loosely also) certain small wheeled transporters (e.g., push chair, shopping trolley, invalid carriage).

عجلة *ɛagala[2]* /unit n, pl *-aat*/ **1** a wheel. *fii ɛagal bi-talat ɛagalaat* there are cycles with three wheels. **2** a cycle, (loosely) a small wheeled transporter (e.g., push chair, shopping trolley, invalid carriage). ‖ *ɛagala sabta [gym]* exercycle. - *zaqq[a] ɛagal(-u)* to leave, push off. **3** pessary.

عجلاتى *ɛagalaati* /n pl *-yya*/ repairer of cycles, hirer of cycles.

ع ج ل [3]

عجل *ɛigl* /n pl *ɛuguul, ɛiggaal, ɛugúla*/ **1** calf. ‖ *beeḳ il-ɛigl* (1) hearts (in cards). (2) variety of mango. - *ɛayy il-ɛigl* all brawn and no brain. - *ɛigl[i] ʔabiis* Apis bull. **2** dolt, blockhead.

عجّالى *ɛaggaali* /adj/ of or pertaining to calves. *ʔil-gazzaar da bi-ysammi g-gamuus ik-kibiir ɛaggaali* that butcher calls old buffalo meat young beef. ‖ *muxx-u ɛaggaali* he's stupid.

ع ج م

عجم *ɛagam* /n/ *[mus]*: *ɛagam ɛaʃiraan* mode in Arabic music beginning on B flat and having E flat. *ɛagam miraṣṣaɛ* mode in Arabic music beginning on B flat and having E half flat.

عجمى *ɛagami* /adj invar/ Persian. *siggaad ɛagami* Persian rugs. ‖ *fiiʃa ɛagami* a *fiiʃa* prepared with a cone of tobacco wrapped in the leaf. - *ʔil-ḥigaaz il-ɛagami [mus]* mode in Arabic music beginning on D and having F sharp and B half flat.

العجمى *ʔil-ɛagami* /prop n/ el-Agami, a coastal resort to the west of Alexandria.

عجميّة *ɛagamiyya* /n/ filling of clarified butter, honey and sesame used in pastries etc.

أعجم *ʔaɛgam* /adj, fem *ɛagma*/ incapable of speech, dumb (of animals).

أعاجم ʕaɛaagim /pl n/ *[obsol]* foreigners, aliens (particularly Persians and Tartars).

معجم *muɛgam*↑ /n pl *maɛaagim*/ dictionary, lexicon.

ع ج ن

عجن *ɛagan (i)* /vt/ to knead. ‖*latt*^{i} *w-ɛagan* to chatter. - *ʔana ɛagn-u w-xabz-u* ≈ I know him inside out. - *maɛguun bi-mayyit il-ɛafariit* ≈ the Devil personified. - vn *ɛagn, ɛagiin*; ava *ɛaagin*; pva *maɛguun*.

عجنة *ɛagna* /inst n, pl *-aat*/ a kneading.

عجين *ɛagiin* /n/ dough. ‖*ɛamalt-i-lu widn*^{i} *min ʧiin wi-widn*^{i} *min ɛagiin* I turned a deaf ear to him.

عجينة *ɛagiina* /n/ **1** /unit n/ one lot of dough. **2** /pl *ɛagaayin*/ paste, batter. *ɛagiinit ʧuub* mud-mix for bricks. ‖*baqit zayy il-ɛagiina f-ʔiidee* she became as putty in his hands. - *huwwa lissa ɛagiina* he is still young and impressionable. **3** nature, temperament. *ɛagint-u ʧayyiba* he is good-natured.

معجون *maɛguun* /n pl *maɛagiin*/ **1** paste, cream. *maɛguun ḥilaaqa* shaving cream. *maɛguun sinaan* tooth-paste. **2** stopping, putty. **3** electuary. see further under م ع ج ن

معجونجى *maɛgungi* /n pl *-yya*/ *[obsol]* pharmacist, chemist, dealer in pharmaceuticals and toiletries.

معاجينجى *maɛagingi* = *maɛgungi*.

عجّان *ɛaggaan* /n * and pl *ɛaggaana*/ **1** construction worker who mixes mortar. **2** one who kneads dough.

معجن *maɛgan* /n pl *maɛaagin*/ kneading trough.

معجنة *maɛgana* /n pl *maɛaagin*/ pit in which mud bricks are made.

اتعجن ʔitɛagan /vi/ to be kneaded. - iva *mitɛigin*.

انعجن ʔinɛagan = ʔitɛagan. - iva *minɛigin*.

عجّن *ɛaggin* /vt/ **1** to knead thoroughly. **2** to cause to have a doughy or pasty consistency. *ɛeef miɛaggin* doughy bread, badly-baked bread. — /vi/ **3** to become doughy or pasty in consistency. - vn *taɛgiin*; ava/pva *miɛaggin*.

اتعجّن ʔitɛaggin /vi/ **1** to be thoroughly kneaded. **2** to be made or become doughy or pasty in consistency. *ʔir-ruzz itɛaggin* the rice stuck together in doughy lumps. - vn *taɛaggun*↑; ava/iva *mitɛaggin*.

ع ج و

عجوة *ɛagwa* /coll n/ pressed date(s).

ع ج و ر see ع ج ج و ر : *ɛagguur*

ع ج ى ر

عجير *ɛagiir* /n/ variety of sedge (Cyperus difformis).

ع د ا see ا م : *maa ɛada*

(ع د ب)

عذبة *ɛadaba* /n pl *-aat*/ turban end hanging on the shoulder.

عادب، عاذب *ɛaadib* /adj/ insufficiently salted, insipid, tasteless. - also *ɛaadim*.

ع د د

عدّ *ɛadd*^{1} *(i)* /vt/ **1** to count, enumerate. ‖*ma-tɛidd*^{i}*-ʃ* and what have you, as in *ruzz*^{i} *w-ṭamaaṭim wi-baṣal ma-tɛidd*^{i}*-ʃ* rice, tomatoes, onions and what have you. - *raaḥ wi-qaal ɛidduu-li* he went off and nobody heard from him again. **2** to consider. *ʔana b-aɛidd-ak raagil* I think of you as a man. *ɛidd-i-ni qult*^{i} *kida* (even) supposing that I said so. - vn *ɛadd, ɛadadaan*; ava *ɛaadid*; pva *maɛduud*.

عدّ *ɛadd*^{2}↓ /n pl *ɛuduud*/ group usually of five (used in counting certain items of food). *ʔana xadt*^{i} *ɛiʃriin ɛadd*^{i} *lamuun tibqa fluus-ak kaam* I took twenty lots of five lemons, so how much do I owe you?

عدّة *ɛadda* /inst n, pl *-aat*/ a counting. ‖*kull*^{i} *raqṣa liiha ɛadda muxtalifa* each dance has a different rhythm.

عدّة *ɛidda* /n/ **1** number, total. *ɛiddit-hum kaam* how many are they? *ʔiʃ-ʃikaat bi-tixḍaɛ li-ɛiddit ʔigraʔaat* the cheques go through a number of procedures. **2** *[Isl law]* prescribed period after which a woman whose marriage has been terminated may remarry. — /pl *ɛidad*/ **3** set of tools or implements, kit. *ɛiddit fuṣl* work kit. *ɛiddit ḥilaaqa* shaving kit. *ṣaaniɛ ɛidda* toolmaker. ‖*walliduu-ha bil-ɛidda* they gave her a forceps delivery. — *ɛidad* /pl n/ **4** tools. *bi-nistaɛmil ɛidad muxtalifa* we use a variety of tools.

عدّية *ɛiddiyya* /n pl *-aat*/ number. *ma-l(uu)-ʃ ɛiddiyya* without number, very many. ‖*ɛiddiyyit yasiin* sevenfold recitation of the *yasiin* sura of the Koran, performed either for the soul of a dead person or for wordly ends, such as the downfall of an enemy or success in a court case.

عدد *ɛadad* /n pl *ʔaɛdaad*/ **1** number, aggregate. *ɛadad il-laɛɛiiba ʔarbaɛa* the number of players is four. ‖*sifr il-ɛadad* the Book of Numbers. **2** numeral. *xud-lak ɛadad* choose a number.. *ʔil-ʔaɛdaad il-fardiyya wiz-zawgiyya* odd and even numbers. **3** issue. *ʔawwil ɛadad min gariidit il-ʔahraam* the first number of el-Ahram newspaper.

عددى *ɛadadi* /adj/ numerical, arithmetical.

عديد *ɛadiid* /adj/ **1** numerous. **2**↑ /in constr/ multi-, poly- (in compounds). *ɛadiid il-istiɛmalaat* multi-purpose. — /n/ **3** lamentation for the dead.

عدّاد ʕaddaad /n pl -aat/ meter. *ʕaddaad kahraba* electricity meter. *ʕaddaad taks* taximeter.

تعداد *taʕdaad* /n/ computation. *taʕdaad is-sukkaan* census.

اتعدّ *ʔitʕadd* /vi/ to be counted. -iva *mitʕadd*.

عدّد *ʕaddid* **1** /vt/ to enumerate. *miʃ laazim tiʕaddid-li mazayaa-ha* you need not enumerate its advantages to me. **2** /vi/ to wail or lament (over the death of s.o.) enumerating the virtues of the deceased. -vn *taʕdiid*; ava *miʕaddid*.

معدّدة *miʕaddida* /n pl -aat/ hired female mourner.

اتعدّد *ʔitʕaddid* /vi/ **1** to become numerous, multiply, proliferate. **2** to be enumerated. **3** (impersonal) passive of *ʕaddid* 2. *ʔil-ʕagaayiz ma-yitʕaddid-ʃ ʕaleehum* old people are not to be lamented (when they die). -vn *taʕaddud*; ava/iva *mitʕaddid, mutaʕaddid*.

متعدّد *mutaʕaddid*[1] /adj */ **1** various, varied. *ʕala mustawayaat mutaʕaddida* at various levels. **2** numerous. *mutaʕaddid iṣ-ṣuwar* in multiple copies. *mutaʕaddid id-daragaat* multi-grade.

أعدّ *ʔaʕadd* /vt/ to prepare. *yiʕidd*[i] *muḥaḍraat-u* he prepares his lectures. -vn *ʔiʕdaad*; ava *muʕidd*; pva *muʕadd*.

إعدادى *ʔiʕdaadi* /adj/ **1** preparatory. *ʔil-maʃruuʕ lissa fil-marḥala l-ʔiʕdadiyya* the project is still in the preparatory stage. ‖*madrasa ʔiʕdadiyya* school for children of the 12-15 age group, junior high school. **2** pertaining to junior high school. *ʃihaada ʔiʕdadiyya* junior high school certificate. *huwwa fiṣ-ṣaff il-ʔawwil il-ʔiʕdaadi* (or *fi-ʔuula ʔiʕdaadi*) he's in the first year of junior high school.

الإعداديّة *ʔil-ʔiʕdadiyya* /n/ the junior high school certificate. *huwwa fil-ʔiʕdadiyya* he's in the last year of junior high school.

معدّات *muʕiddaat* /pl n/ equipment.

استعدّ *ʔistaʕadd* /vi/ to prepare oneself, get ready. *dabbar nafs-u wi-staʕadd*[i] *l-kull*[a] *ḥaaga* he settled his affairs and prepared for everything. *ʔiza kunt*[a] *ʕawiz-ni ʔaagi maʕaak ʔana mustaʕidd* if you want me to come with you I'm ready and willing. ‖ *ʔistaʕidd [athl]* get set! as in *xud makaan-ak - ʔistaʕidd - gary* on your mark, get set, go! - vn *ʔistiʕdaad*; ava *mustaʕidd, mistiʕidd*[i].

استعداد *ʔistiʕdaad* /n/ **1** readiness, preparedness. **2** capability, potential, propensity. **3** susceptibility, predisposition. — *ʔistiʕdadaat* /pl n/ **4** preparations.

ع د ر see ع ز ر : *ʔil-ʕadra*

ع د س

عدس *ʕads* /coll n/ lentil(s). ‖*ʕads abu gibba* unhulled lentils. - *ʔil-ʕads illi ḍarab il-ḥamaam ʕala ʕeen-u [vendor's cry]* ≈ lentils far tastier than pigeon! - *ʔilli ma-yiʕraf-ʃ*[i] *yʔuul ʕads* he who doesn't know says it's lentils (of people who judge only by appearance).

عدسايّة *ʕadsaaya* /unit n, pl -aat/ a lentil.

عدسة *ʕadasa* /n pl -aat/ lens.

ع د ل

عدل *ʕadal*[1] *(i)* /vt/ **1** to set straight, put properly in place. *ʔiʕdil il-ḥaaga makan-ha* put the things properly in place! *ʕadalit in-naḍḍaara* she set her glasses straight. **2** to set to rights, reform. *ḥa-tiʕdil il-malakoot* do you think you can set the world to rights? *yaama nifs-i ʔaxd-u gooz ʔaʔlaam - ʔalam yiʕdil-u w-ʔalam yiʕwig-u* how often I've itched to give him a couple of slaps - one to bring him to his senses and one to knock him silly! ‖*ga-lha l-ʕariis illi ḥa-yiʕdil ḥal-ha* a suitor has come along who is just right for her. **3** /vi/ to be just. *ʔilli yuḥkum laazim yiʕdil* he who stands in judgement should himself be just. -vn *ʕadl, ʕadalaan*; ava *ʕaadil*; pva *maʕduul*.

¶ *ʕadal ʕan* to reconsider. *ʔiʕdil ʕan raʔy-ak* reconsider your opinion. - vn *ʕuduul ʕan*.

عدل *ʕadl* /n/ **1** justice. ‖*nihayt-u faḍl*[i] *w-ʕadl* ≈ everything's fair and square. **2** /adj invar and pl *ʕuduul/ [Isl law]* meeting all requirements (of a witness). *tigiib raagil ʕadl yifhad ʕal-ʕaʔd* find an honourable man to witness the contract.

عدلة *ʕadla* /inst n, pl -aat/ an adjustment.

عدل *ʕadal*[2] /n/ someone or something exactly suitable or fitting. *laʔa ʕadal-u fil-waẓiifa di* he found just what suited him in that job. -/adjectivally/ *ʔil-gawaaza l-ʕadal* an ideal marriage.

عدل *ʕidil* /adj */ **1** straight. *xaʃaba ʕidla* a straight piece of wood. **2** /also pl *ʕadaala/* proper, decent (sometimes with a sarcastic implication). *huwwa ʕaawiz sukkaan ʕidliin fil-ʕimaara* he wants (to have) nice people living in the building. *duxt is-sabaʕ doxaat ʕaʃaan ʔalaaʔi ḥaaga ʕidla* I went to endless trouble to find something even half-way decent. *huwwa-nta lli ʕidil* you talk as if you are beyond criticism! ‖ *ʔiftikir ḥaaga ʕidla* change the subject to something nicer. -/adverbially/ *ʔuʔʕud ʕidil* sit properly! *ʔimʃi ʕidil yiḥtaar ʕadiww-ak fiik [prov]* keep to the straight and narrow and your enemy will be baffled as to how to harm you.

أعدل *ʔaʕdal* /el/ **1** more/most straight, correct etc. **2** more/most just.

عدالة *ʕadaala* /n/ justice.

عديل *ʕadiil* /n pl *ʕadaayil*/ husband of a wife's sister.

اتعدل *ʔitʕadal* /vi/ **1** to correct one's position, straight-

en oneself. *ʃitɛadal fi-qaɛdit-u* he seated himself more comfortably. **2** to mend one's ways, behave better. *ma-titɛidil baqa* it's high time you behaved yourself! **3** to be straightened, be set right. - ava/iva *mitɛidil*.

انعدل *ʃinɛadal* = *ʃitɛadal*. - ava/iva *minɛidil*.

عدّل *ɛaddil* /vt/ **1** to put right, set straight. *ɛaddil hiduum-u* he straightened his clothes. ‖*rabb-i-na yɛaddil-haa-lak* may our Lord put things right for you! **2** to amend, modify. *ʃil-qawaniin illi ɛaddilit il-qawaniin is-sabqa* the laws that amended the previous laws. — /vi/ **3** to point out and correct faults. *ma-ḥadd-ʃ yiqdar yiɛaddil ɛalee* no one can find fault with him, he is beyond reproach. *ɛaddilna ɛat-tarkibaat illi kaan ʃakl-a-ha wiḥiʃ* we went over and made improvements on the badly finished fixtures. - vn *taɛdiil*; ava *miɛaddil*; pva *muɛaddal*.

تعديل *taɛdiil* /n pl *-aat*/ amendment, modification. *taɛdiil wizaari* cabinet reshuffle.

معدّلة *miɛaddila* /adj */ *[freq deris]* clever and industrious. *ʃil-kuusa ya mɛaddila [vendor's cry]* ≈ zucchini for the little home-maker!

معدّل *muɛaddal* /n pl *-aat*/ average, average rate. *muɛaddalaat il-ʃintaag* the production rates. *muɛaddalaat il-ḥaraara f-maṣr* the average temperatures (at given times or places) in Egypt.

اتعدّل *ʃitɛaddil* /vi/ to become or be made straight or correct. - ava/iva *mitɛaddil*.

عادل *ɛaadil* /vt/ **1** to be equivalent to. *ʃis-sanawiyya l-ɛamma ʃaw ma yɛadil-ha* the secondary school certificate or its equivalent. **2** to neutralize, counterbalance, compensate for. - vn *miɛadla*; ava *miɛaddil*.

معادلة *muɛadla* /n pl *-aat*/ *[math]* equation.

اتعادل *ʃitɛaadil, taɛaadalʔ* /vi/ **1** to come out even, draw. *ʃil-matʃ intaha b-taɛaadul* the match ended in a draw. **2** to break even. - vn *taɛaadul*; ava *mitɛaadil*.

اعتدل *ʃiɛtadal* /vi/ **1** to become straight or upright. **2** to become moderate. - vn *ʃiɛtidaal*; ava *miɛtidil, muɛtadil*.

معتدل *muɛtadal* /interj/: *muɛtadal marf* common mishearing of the command *muɛtaadan marf* ready, march!

استعدل *ʃistaɛdil* **1** /vt/ to straighten out. *ʃis-samkari staɛdil if-faseeh* the panel beater straightened the chassis. - a passive form identical with the active form occurs in the proverb *ʃil-maɛwuug yistaɛdil ɛas-sindaal* (the crooked may be straightened on the anvil) ≈ nothing is so bad it cannot be set right. **2** /vi/ *[rur, euphem]* to wash the pubic region. - vn *ʃistiɛdaal*; ava/pva *mistaɛdil*.

ع د م

عدم *ɛidim (a)* **1** /vt/ to be deprived of. *ɛidim illi ḥilt-u* or *ɛidim illi waraa wi-lli quddaamu* he lost everything. ‖*(min) yadd mi-niɛdam-ha [women in trad soc]* formula of thanks for food or drink handed one. - *ʃin ʃa-lla tiɛdamii-ni la-... [women in trad soc]* adjuration urging acceptance, as in *ʃin ʃa-lla tiɛdamii-ni la-tiʃrabii* ≈ I pray that I may die if you do not drink it! - *ɛidim il-ɛeen* ≈ to suffer, go through hell, as in *ʃin ʃa-lla yiɛdam ɛeen-u [women in trad soc]* may he suffer! *ʃir-raagil il-ɛadmaan il-ɛeen da* (1) *[women in trad soc]* ≈ that bastard of a man! (2) that poor, suffering man! *ʃana ɛdimt ɛeen-i w-ɛafyit-i ɛaleeku* ≈ I've worked myself to the bone for you. **2** /vi/ to become rickety or decrepit, become worn out and useless. *ʃig-gazma ɛidmit* the shoes are worn out. *ʃil-makana ɛidmit* the machine is on its last legs. - vn *ɛadam*; ava *ɛaadim*.

عدم *ɛadam! (i)* /vt/ **1** to deprive of. *ɛadamuu-ha l-ɛafya* they drained her of her health. **2** to wear out, exhaust, incapacitate. *ḍarabuu-ni lamma ɛadamuu-ni* they beat me almost to death. - vn *ɛadamaan*; ava *ɛaadim*; pva *maɛduum*.

عدم *ɛadam²* /n/ lack, non-existence. *xalaq-u mil-ɛadam* he created it from nothing. *fi-ɛadam wuguud il-mudiir* in the absence of the director. *ɛadam il-ʃahliyya* ineligibility. *ɛadam il-ʃimkaniyya* impossibility. ‖*ḥalt-u ɛadam* he's in a bad way. - *ɛadam il-muʃaxza* excuse me. - *da huwwa ɛadam-u [women in trad soc]* ≈ he hasn't a hope in hell!

عادم *ɛaadim* **1** /n pl *ɛawaadim*/ waste, waste material. *ʃil-quṭn iṭ-ṭibbi b-yitɛimil min ɛaadim il-quṭn* cotton wool is made from cotton waste. *yilimmu ɛawaadim it-tigaara* they gather commercial waste. ‖*masuurit ɛaadim* exhaustpipe. **2** /adj/ insufficiently salted, insipid, tasteless. - also *ɛaadib*.

معدوم *maɛduum* /adj */ lacking in. *maɛduum iʃ-ʃaxṣiyya* lacking in personality.

عدمان *ɛadmaan* /adj/ worn out, exhausted.

عديم *ɛadiim* /adj/ lacking. *ɛadiim iʃ-ʃabah* peerless. *ɛadiim it-taṣarruf* incapable of conducting oneself properly, gauche. *ɛadiim it-tarbiyya* ill-mannered. ‖*ɛadiim il-ʃaṣl* unprincipled.

اتعدم *ʃitɛadam* /vi/ **1** to be deprived. *ʃin fa-lla m-atɛidim-ʃ minku [women in trad soc]* may I not be deprived of you! (expressing gratitude). **2** to be worn out, be exhausted, be incapacitated. - iva *mitɛidim*.

انعدم *ʃinɛadam* = *ʃitɛadam*. - vn *ʃinɛidaam*; iva *minɛidim*.

أعدم *ʃaɛdam* /vt/ **1a** to execute, put to death (e.g., a

prisoner). **1b** to destroy (animals). **2** to destroy completely. *ʃaɛdam il-wasiiqa* he destroyed the document. - vn *ʃiɛdaam*; ava *muɛdim*; pva *muɛdam*.

إعدام *ʃiɛdaam* /n/ **1** destruction, annihilation. **2** execution, capital punishment.

معدم *muɛdim* /adj */ destitute, poverty-stricken.

ع د ن [1]

معدن *maɛdan* /n pl *maɛaadin*/ **1** metal. *ʃasnaan maɛdan* metal teeth. ‖ *ʃil-ʃafya maɛdan* everything's perfect! - *ʃin-naas maɛaadin* people come in all sorts. **2** *[obsol]* half a piastre, a half-piastre coin.

معدنى *maɛdani* /adj/ **1** metal, metallic. *siluuk maɛdaniyya* metal wires. **2** mineral. *mayya maɛdaniyya* mineral water.

عدّن *ɛaddin* /vi/ to mine. - vn *taɛdiin*; ava *miɛaddin*.

ع د ن [2]

عدن *ɛadan* /prop n/ Aden. ‖ *gannit ɛadan* paradise.

ع د و

عدى *ɛada[1] (i)* /vt/ to infect, affect by contagion. *ʃil-ʃaxlaaq il-wiḥʃa tiɛdi* bad manners are contagious. - vn *ɛadwa*; ava *ɛaadi*; pva *maɛdi*.

عدوى *ɛadwa* /fem n/ infection, contagion. *xad ɛadwa* he caught a disease.

عدوان *ɛidwaan, ɛudwaan* /n/ hostility, enmity, aggressiveness. *ʃil-ɛidwaan is-sulaasi* the tripartite aggression (against Egypt in 1956).

عدوانيّة *ɛudwaniyya = ɛidwaan*.

عدا *ɛada[2]: maa ɛada* see *maa*.

العدوى *ʃil-ɛadawi* /prop n/: Sidi el-Adawi, a Muslim saint commonly invoked by those searching for lost property. *ya salaam ya ɛadawi wi-lli ylaqii lu l-ḥalaawa* O Adawi! a reward for the one who finds it.

عدوّ *ɛadiww* /n* and pl *ʃaɛaadi, ɛida, ʃaɛda*/ enemy. ‖ *ɛadiww-ak* or *ʃil-ɛadiwwiin (wi-lli yikrah-ak)* ≈ may it happen to your enemy! or may it happen to your enemies (and those who hate you)! (invocation against evil, used when something unpleasant is mentioned), as in *ya feexa ʃiftikri ḥaaga ɛidla - ʃin fa-lla l-ɛadiwwiin wi-lli yikrahuu-ki* don't talk of such awful things, woman - may they befall only your enemies and those that hate you! - *ma-ysurr[i]-ʃ la ɛaduw wala ḥabiib* (it gives joy to neither foe nor friend) ≈ it's horrible, it's awful, as in *baqa ḥal-ha ma-ysurr[i]-ʃ la ɛaduw wala ḥabiib* she got into an appalling state, *miʃ kifaaya ʃinnu malṭuuɛ il-laṭɛa l-mihabbiba di-lli ma-tsurr[i]-ʃ la ɛaduw wala ḥabiib* isn't it enough that he should be so cruelly abandoned? - *ɛadiww if-ʃams* albino.

عداوة *ɛadaawa* /n/ enmity, hatred, hostility.

عادى *ɛadii-: ɛadii-k* /fem *ɛadii-ki*, pl *ɛadii-ku(m)*/ ≈ may it happen to your enemy! (invocation against evil, used when something unpleasant is mentioned).

اتعدى *ʃitɛada* /vi/ to be infected. *xalli-bn-ak ma-yixtiliṭ-ʃ[i] b-ʃawlaad-i la-yitɛidu minnu* don't let your son mix with my children, lest they be infected by him. - iva *mitɛidi*.

اتعدى *ʃinɛada = ʃitɛada*. - iva *minɛidi*.

عدّى *ɛadda* /vt/ **1** to cross. *tiqdar tiɛaddi n-niil ɛoom* can you swim across the Nile? *ḥa-nɛaddi ʃ-ʃaariɛ bi-taks[i] leeh* why should we take a taxi just to cross the street? **2** to cause to pass through. *ɛaddi l-ʃastik min il-bakya* pass the elastic through the runner! — /vi/ **3** to pass, go past. *ʃil-leela ɛaddit* the night passed. *ʃir-ruṣaaṣa ɛaddit min il-xaʃab* the bullet penetrated the wood. *ɛaddeet mil-ɛarabiyya* I overtook the car. *ɛaddeet ɛal-baqqaal* I passed the grocer's. *ɛaddeet ɛal-baqqaal ʃaaxud minnu fwayyit ḥagaat* I passed by at the grocer's to get a few things from him. ‖ *ɛaddit ɛalee* the point was lost on him. - vn *taɛdiyya*; ava/pva *miɛaddi*.

معدّيّة *miɛaddiyya* /n pl *-aat, maɛaadi*/ **1** small footbridge. **2** ferry.

المعادى *ʃil-maɛaadi* /prop n/ el-Ma'adi, a garden suburb about seven miles to the south of the centre of Cairo.

معدّاوى *miɛaddaawi* /n pl *-yya*/ ferryman.

اتعدّى *ʃitɛadda* /vt/ **1** to exceed, surpass, go beyond. *mihnit-u ma-titɛaddaa-ʃ il-ʃaati* his job consists of nothing but the following. — /vi/ **2** to be crossed, be passed. **3** to commit a transgression or offence, trespass. *ʃitɛaddu ɛala ḥaqq-i* they trespassed on my rights. ‖ *ʃil-mitɛaddi nadmaan [prov]* the aggressor will come to regret his aggression. - vn *taɛaddi*; ava/iva/pva *mitɛaddi*.

عادى *ɛaada[1]* /vt/ **1** to treat with hostility, treat as an enemy. *niqṣir iʃ-ʃarr[i] la tɛadii-ni wala ʃaɛadii-k* let's spite the Devil, and not be enemies. *ḥ-anṣur-ak ɛala lli yɛadii-k* I'll stand with you against your enemies. **2** to make an enemy of (s.o.). *min naṣaḥ ig-gaahil ɛadaa [prov]* give advice to someone ignorant and you will only make an enemy of him. - vn *muɛadaah, miɛadiyya*; ava *miɛaadi*.

اتعادى *ʃitɛaada* /vi/ **1a** to be treated with animosity. **1b** to be made an enemy. **2** to become enemies. - ava/iva *mitɛaadi*.

أعدى *ʃaɛda* /vt/ to infect. - ava *muɛdi*.

معدى *muɛdi* /adj/ infectious, contagious.

اعتدى *ʃiɛtada* /vi/ **1** to make an attack. *ʃiɛtadu ɛalee*

biq-ḍarb they attacked him with blows. **2** to assault sexually. *ʃiɛtada ɛal-bint* he ravished the girl. - vn *ʃiɛtida, ʃiɛtidaaʃ↑*; ava *miɛtidi, muɛtadi↑*.
اعتداء *ʃiɛtidaaʃ* /n pl *-aat/* attack. ‖ *ʃil-iɛtidaaʃ issulaasi* the tripartite aggression (against Egypt in 1956).

ع ذ ب see ع د ب and [3] ع ز ب and [4] ع ز ب

ع ذ ر see ع ز ر

ع ذ ل see [2] ع ز ل

[1] ع ر ب
العرب *ʃil-ɛarab* /coll n/ the Arabs.
عربى *ɛarabi* **1** /adj pl *ɛarab/* **1a** Arab, Arabian, Arabic. ‖ *ʃit-tariix il-ɛarabi* dating according to the Islamic calendar, Hijra dating. **1b** bedouin. — /n/ **2a** /pl *ɛarab/* male Arab. ‖ *ʃibn[a] ɛarab* (1) an Arab. (2) stalwart fellow, fine man. **2** /pl *ɛurbaan, ɛarab/* a bedouin. **3** /no pl/ Arabic, the Arabic language. *ʃil-ɛarabi l-faṣiiḥ* literary Arabic. ‖ *bil-ɛarabi* in plain language.
عربيّة *ɛarabiyya[1]* /n/ **1** /pl *-aat/* **1a** female Arab. **1b** bedouin woman. **2** *ʃil-ɛarabiyya* the Arabic language.
عروبة *ɛuruuba* /n/ Arabism, Arab identity.
عرّاب *ɛarraab* /n */ godfather.
أعرابى *ʃaɛraabi* /pl *ʃaɛraab/* **1** /adj/ bedouin. **2** /n/ a bedouin.
أعرابيّة *ʃaɛrabiyya* /n pl *-aat/* a bedouin woman.
عرّب *ɛarrab* /vt/ **1** to translate into Arabic. **2** to Arabicize. - vn *taɛriib*; ava *muɛarrib*; pva *muɛarrab*.
اتعرّب *ʃitɛarrab* /vi/ **1** to be translated into Arabic. **2** to be Arabicized. **3** to affect the manners of an Arab. - iva *mitɛarrab*.

[2] ع ر ب
عربيّة *ɛarabiyya[2]* <cf T *araba*> /n pl *-aat, -aat/* wheeled vehicle (of any description). *ɛarabiyya ʃugra* a taxi. *ɛarabiyya karru* animal-drawn cart. *ɛarabiyyaat qaṭr* railway coaches.
عربجى *ɛarbagi* <T *arabacı*> /n pl *-yya/* **1** driver of any animal-drawn vehicle. **2** uncouth or foul-mouthed person. ‖ *ʃaxlaaq ɛarbagiyya* uncouth manners.
عرباتى *ɛarabaati* /n pl *-yya/ [obsol]* repairer of carts.
عربخانة *ɛarbaxaana* /n pl *-aat/ [obsol]* shed for housing carts.

[3] ع ر ب
عربة *ɛarba* /n pl *ɛurab/ [mus]* **1** quarter tone. **2** device for adjusting the tone of the strings of the *ɛanuun* (see Pl.J, 25).

ع ر ب د
عربد *ɛarbid* /vi/ to behave in a rowdy or riotous way, become rowdy, run wild. - vn *ɛarbada*; ava *miɛarbid*.
عربيد *ɛarbiid* /adj */ rowdy.
اتعربد *ʃitɛarbid* /vi/ (impersonal) passive of *ɛarbid*. *yaama l-beet da tɛarbid fii* this house has seen a lot of hooliganism. - iva *mitɛarbid*.

ع ر ب ن
عربون *ɛarbuun* /n pl *ɛarabiin/* down payment, deposit. *b-aaxud ɛarbuun xamsiin fil-miyya* I take fifty percent deposit.
عربن *ɛarbin* /vi/ to pay a deposit, make a down payment. - vn *ɛarbana*; ava *miɛarbin*.
اتعربن *ʃitɛarbin* /vi/ (impersonal) passive of *ɛarbin*. *ʃik-kursi da mitɛarbin ɛalee* a deposit has been paid on that chair. - iva *mitɛarbin*.

ع ر ج
عرج *ɛarag (u)* /vi/ to limp, hobble. - vn *ɛarag*; ava *ɛaarig*.
عرجة *ɛarga* /n/ **1** a limp. **2** zigzag design.
أعرج *ʃaɛrag* /adj, fem *ɛarga*, pl *ɛurg/* lame.
عريجة *ɛariiga* /n/ zigzag design.
المعراج *ʃil-miɛraag* /n/ *[Isl]* Muhammad's ascension to the seven heavens.
عرّج *ɛarrag* /vt/ to make (s.th.) wavy, undulating or uneven. *ɛarragit il-qaṣṣa* she cut (it) unevenly. *ʃarḍ[1] mɛarraga* undulating land. - vn *taɛriig*; ava/pva *miɛarrag*.
اتعرّج *ʃitɛarrag* /vi/ to be made wavy, undulating or uneven. - iva *mitɛarrag*.
تعرّج *taɛarrug↑* /n pl *-aat/* zigzag, undulation, unevenness.

ع ر ج ن
عرجون *ɛarguun* /n pl *ɛaragiin/* date stalk. ‖ *ʃanfaf milɛarguun* drier than a date stalk.

[1] ع ر ر
عرّ *ɛarr[1] (i)* /vt/ to disgrace, shame, dishonour. *da-nta tɛirr[i] balad* you are the type that brings shame on every one around you. - vn *ɛararaan*; ava *ɛaarir*; pva *maɛruur*.
عرّة *ɛirra* /n/ slight, insult, disgrace. *ya ɛirrit in-nisa* you disgrace to womanhood! - /adjectivally/ *ḥaaga ɛirra* a disgraceful thing.

اتعرّ ʃitɛarr /vi/ **1** to be disgraced, be shamed, be dishonoured. **2** to feel ashamed, feel disgraced. - ava/iva *mitɛarr*.

انعرّ ʃinɛarr = ʃitɛarr. - ava/iva *minɛarr*.

استعرّ ʃistaɛarr[i] /vi/ to be ashamed. *kaan mistaɛarr[i] min huduum-u* he was ashamed of his clothes. - ava *mistaɛarr*.

ع ر ر [2]

عرّ ɛarr[2] *(u)* /vi/ *[abus]* to go about, wander about. *kunt bi-tɛurri feen ya mara miš-ṣubḥ* where the hell have you been tramping about all this time, woman? - vn *ɛararaan, ɛarr*; ava *ɛaarir*.

ع ر س [1]

عروس ɛaruus[↑] = *ɛaruusa*. ‖ *bitingaan il-ɛaruus* variety of long egg-plant. - *ɛaruus il-baḥr il-ʃabyaḍ* the Bride of the Mediterranean (epithet of Alexandria).

عروسة ɛaruusa /n pl *ɛaraayis*/ **1a** bride, bride-to-be. ‖ *ɛaruusit in-niil* 'the bride of the Nile'; a maiden said to have been cast into the Nile in ancient times as a sacrifice at the height of the flood; later, a life-sized doll or column of earth whose casting into the Nile was one of the traditional ceremonies attending the cutting of the dam that separated the Nile from the Cairo Canal (see *xaliig*). - *ɛaruusit il-baḥr* (1) mermaid. (2) cowfish. - *zayy[i] ʃumm il-ɛaruusa - faḍya w-maʃbuuka [prov]* like the bride's mother - idle and busy doing nothing. - *ɛaruusit iz-zaar* woman possessed by a demon for whom a *zaar* ritual is performed. - *ɛaruusit il-burɣuɛ* decorated part of a woman's veil. **1b** marriageable woman. **2** affectionate form of address or reference to a young girl. **3a** doll. ‖ *ɛaraayis il-muulid* sugar dolls clad in bright paper dresses sold during the celebrations for the birthday of the Prophet Muhammad. **3b** puppet, marionette. **4** whipping post. **5** *[auto]* upright projection on a bumper/fender, overrider. **6** vertical axle of the main cog of a *saqya* (see Pl.E, 4). **7** gold crescent on a necklace.

عروسى ɛaruusi /adj invar/: *ṭabla ɛaruusi* a style of drumming used in *zaar* ceremonies. *ṭaara ɛaruusi* large tambourine without cymbals, *zaar* word denoting the *daff*.

عريس ɛariis /n pl *ɛirsaan*/ **1** bridegroom, future husband. **2** suitor. **3** eligible young man.

ع ر س [2]

عرسة ɛirsa /n pl *ɛiras*/ **1** weasel. ‖ *ʃilli yxaaf mil-ɛirsa ma-bi-yrabbii-ʃ katakiit [prov]* he who fears the weasel doesn't raise chicks. **2** malignant and vicious person.

ع ر س [3] see ع ر و س : *ɛaruus*

ع ر ش

عرش ɛarf /n pl *ɛuruuf*/ throne.

عرش ɛarf /n pl *ɛuruuf, ɛirfaan*/ *[rur]* ceiling.

عرش ɛirf /n pl *ʃaɛraaf, ɛuruuf*/ **1** leafy tops of root vegetables. **2** cluster of overhanging foliage.

عريش ɛariif /n/ **1** /pl *ɛuruuf*/ horizontal trellis. **2** /pl *ɛirfaan*/ **2a** shaft and attached harness (of a cart). **2b** coupling unit (of a truck).

العريش ʃil-ɛariif /prop n/ el-Arish, a town on the Mediterranean coast of Sinai.

عريشة ɛariifa /n pl *ɛaraayif*/ **1** animal pen in a field. **2** trellis supporting a climbing plant.

عرّش ɛarraf /vt/ **1** to trim, guillotine (uneven edges of paper, books). **2** to train (a plant) to grow up a trellis. **3** to enclose or roof over with trellises supporting climbing plants. - vn *taɛriif*; ava/pva *miɛarraf*.

تعريشة taɛriifa /n pl *taɛariif*/ trellis supporting climbing plants, bower, arbour.

معرّش miɛarraf /adj */ fine-looking, well-dressed. *ʃimʃi miɛarraf wala timʃi mikarraf [prov]* ≈ it's more important to dress well than to eat well.

اتعرّش ʃitɛarraf /vi/ passive of *ɛarraf*. - iva *mitɛarraf*.

ع ر ص [1]

عرص ɛarṣ /n pl *-aat*/ **1** pimp. **2** *[abus]* stinker, swine.

عرّص ɛarraṣ /vi/ **1** to pimp, procure. *ɛarraṣ lil-ɢaḥba* he pimped for the prostitute. **2** to ignore improprieties wilfully, turn a blind eye. *bi-yɛarraṣ ɛala lli bi-yʕiibu* he turns a blind eye when people are absent. - ava *miɛarraṣ*.

معرّص miɛarraṣ /n */ **1a** pimp, procurer. **1b** lecher. **2** unscrupulous person.

معرّصاتى *miɛarraṣaati* = *miɛarraṣ*.

ع ر ص [2]

عرصة ɛarṣa /n pl *-aat, ɛuraṣ*/ **1** thick disc of pottery forming the floor of the baking chamber of a mud oven, (loosely) the floor of a mud oven (see Pl.C, 9). **2** baking chamber of a mud oven (see Pl.C, 8).

ع ر ض

عرض ɛaraḍ[i] *(i)* /vt/ **1** to offer, present, show. *ɛaraḍu ɛalayya waẓiifa* they offered me a job. *ɛaraḍu l-muttahamiin ɛaf-faahid* they presented those accused to the witness. *ʃis-sinima di b-tiɛriḍ ʃaflaam ʃagnabiyya* that cinema shows foreign films. **2** *[abus]* to afflict (of illness). *ʃeeh illi ɛaraḍ-ak* whatever (dreadful illness) has attacked you?! — /vi/ **3** to crop up, occur.

ʕaraḍit-lu mas'ala ʕaṭṭalit-u something cropped up and delayed him. ‖ ʃagaaza ʕarḍa contingency leave. - vn ʕarḍ; ava ʕaariḍ; pva maʕruuḍ.

¶ ʕaraḍ ʕan to turn away from, have nothing to do with. bi-yiʕriḍ ʕan if-fuxl he deliberately avoids work.

عرض ʕarḍ[1] /n/ **1** /pl ʕuruuḍ/ show, presentation, display. ʕarḍ[i] ʃazyaaʃ fashion show. **2a** /pl ʃaʕraaḍ/ width, breadth. bil-ʕarḍ (1) widthwise, crosswise. (2) abreast. ‖ qumaaʃ ʕarḍ[a] ʕarḍeen double-width cloth (i.e. cloth woven 140 cm wide or more). -fi-ʕarḍ il-baḥr on the open sea. - warrii-ni ʕarḍ[i] qafaa-k (or ktaaf-ak) let me see the back of you! - ḥa-yxalli ḥirt-ak ʕarḍ[i] w-ṭuul it will perplex you to the utmost. **2b** *[geog]* latitude. xaṭṭ[i] ʕarḍ line of latitude.

عرض ʕarḍ[2], ʕirḍ /n pl ʃaʕraaḍ/ honour. reputation. ‖ ʃana f-ʕarḍ-ak I beseech you!

عرضي ʕarḍi /adj/ **1** widthwise, transverse. **2** *[geog]* latitudinal.

عارض ʕaariḍ[1] /n pl ʕawaariḍ/ **1** illness. ga-k ʕaariḍ ≈ a pox upon you! ʕalqa tgib-lu l-ʕaariḍ a beating that will really knock the stuffing out of him. **2** /n */ demonstrator, exhibitor. ʕaariḍ ʃaflaam film projectionist.

عارضة ʕarḍa /n pl -aat, ʕawaariḍ/ crossbar, crossbeam. ʕarḍit goon crossbar of a goal. ʕarḍit nool breast beam of a loom. ʕarḍit ʂaari *[naut]* gaff.

عارضة ʕaariḍa /n pl -aat/ female demonstrator. ʕaariḍit ʃazyaaʃ fashion model, mannequin.

معروضات maʕruḍaat /pl n/ exhibits.

عرضة ʕurḍa: ʕurḍa li- exposed to, liable to, susceptible to. miqaʕʕadiin-u fil-maktab ʕurḍa lil-maʃaakil they are stationing him in the office to cope with the problems (that arise). ʃig-guduur bi-tibqa ʕurḍa liḍ-ḍaʕf the roots are liable to grow weak.

عرض ʕaraḍ[2] /n pl ʃaʕraaḍ/ **1** chance happening, accident. **2** symptom. ẓaharit ʕaleeha ʃaʕraaḍ il-ḥumma the symptoms of fever appeared on her.

أعرض ʃaʕraḍ[1] /el/ broader/broadest, wider/widest.

عروض ʕaruuḍ /n/ prosody.

عريض ʕariiḍ /adj pl ʕiraaḍ, ʕuraaḍ/ broad, wide. kurraat ʕariiḍ broad-leaved leeks. ṭumbaak ʕariiḍ coarse tobacco. ‖ ṭiwiil ʕariiḍ a great big (person). - qafaa ʕariiḍ he's dim-witted.

عريضة ʕariiḍa /n pl ʕaraayiḍ/ petition, application. ‖ ʕariiḍit daʕwa *[leg]* application for legal proceedings.

معرض maʕraḍ /n pl maʕaariḍ/ **1** display, exhibition. **2**↓ walk-round store.

اتعرض ʃitʕaraḍ /vi/ **1** to be offered, be presented, be shown. **2** to be stricken (by illness). - iva mitʕiriḍ.

عرّض ʕarraḍ /vt/ **1** to expose, make vulnerable. ʕarraḍ nafs-u lil-xaṭar he exposed himself to danger. makaan muʕarraḍ lis-sirqa a place exposed to (the possibility of) theft. -/the literary passive form occurs in elevated speech/ ma-yuʕarraḍ-ʃ[i] liʃ-ʃams it should not be exposed to the sun. **2** to broaden. niʕarraḍ il-xaʃab we increase the breadth of the timber. - vn taʕriiḍ; ava miʕarraḍ; pva muʕarraḍ↑.

¶ ʕarraḍ bi- to make insinuations against. ʃinti bi-tʕarraḍi biyya are you making insinuations against me?

اتعرّض ʃitʕarraḍ /vi/ **1** to be exposed, be made vulnerable. ʃil-maʃaakil illi b-atʕarraḍ laha the problems I face. bi-yitʕarraḍ ʃinnu yiʕya ʃaw yisaafir he is exposed to the possibility that he may fall ill, or have to leave for somewhere else. **2** to be broadened. **3** to object, protest, stand in opposition. - vn taʕarruḍ; ava/iva mitʕarraḍ.

عارض ʕaariḍ[2] /vi/ to object, protest, stand in opposition. ḥadd[i] minnina yiqdar yiftaḥ ḥanak-u walla yʕaariḍ does any one of us dare to open his mouth or protest? - vn muʕarḍa; ava miʕaariḍ.

اتعارض ʃitʕaariḍ /vi/ to stand in contradiction, conflict. - vn taʕaaruḍ; ava mitʕaariḍ.

أعرض ʃaʕraḍ[2]: ʃaʕraḍ ʕan to turn away from, have nothing to do with. - vn ʃiʕraaḍ; ava muʕriḍ.

اعترض ʃiʕtaraḍ **1** /vt/ to stand in opposition to. ma-ḥadd[i]-ʃ iʕtaraḍ-na no one stood in our way. **2** /vi/ to object, protest, stand in opposition. bi-yʕtiriḍ ʕala kalaam-ak he objects to what you say. - vn ʃiʕtiraaḍ; ava miʕtiriḍ, muʕtariḍ↑.

اعتراض ʃiʕtiraaḍ /n pl -aat/ opposition, objection, veto. ‖ ʃallahumma la-ʕtiraaḍ a formula used to disclaim any blasphemous intent in criticizing God's work, as in ʃir-raagil da mʕarraṣ ʃallahumma la-ʕtiraaḍ the man's a swine, but God knows best!

اعرضّ ʃiʕraḍḍ /vi/ to become wide. - ava miʕriḍḍ.

استعرض ʃistaʕraḍ /vt/ **1** to show off with, make a display of. ma-tistaʕraḍ-ʃ[i] ʕaḍalaat-ak ʕaleena don't try to use strongarm tactics with us. **2**↑ to review, go over and examine. ʃir-ra'iis istaʕraḍ ḥaras if-ʃaraf the president reviewed the guard of honour. ḥa-nistaʕraḍ il-ʃaraa'i di kull-a-ha we shall review all these opinions. **3a** to consider wide or thick. **3b** to select for width or thickness. - vn ʃistiʕraaḍ; ava mistaʕriḍ.

استعراضي ʃistiʕraaḍi /adj/ of the light variety type (of entertainment). firqa stiʕraḍiyya a song and dance troupe. film istiʕraaḍi a musical-comedy film.

ع ر ض ح –

عرضحال ʕarḍaḥaal <cf T and P arzıhal from Arabic>

/n pl *-aat*/ **1** application or petition to a government department. **2** (also *ʕarḍaḥaal damγa*) paper printed with a fiscal stamp, upon which an official application or petition is submitted.

عرضحالجى *ʕarḍaḥalgi* /n pl *-yya*/ professional self-employed writer of applications and petitions.

ع ر ط

عرط *ʕaraṭ (u)* /vt/ *[non-Cairene]* to chew, gnaw or bite pieces off (s.th.). *ʕaraṭ kuuz id-dura* he chewed the kernels off the corn cob. - vn *ʕarṭ*; ava *ʕaariṭ*; pva *maʕruuṭ*.

اتعرط *ʔitʕaraṭ* /vi/ *[non-Cairene]* to be chewed, gnawed or bitten off. - iva *mitʕiriṭ*.

ع ر ف [1]

عرف *ʕirif (a)* /vt/ **1** to know. *miin ʕaarif il-mustaqbal* who knows the future? *ma-yiʕraf-ʃ[i] (ḥaaga) fiṭ-ṭibb* he knows nothing about medicine. *ʔilli tiʕraf-u ʔaḥsan mi-lli ma-tiʕraf-uu-ʃ [prov]* better the devil you know than the devil you don't know. *ʔil-ʔugra l-maʕruufa* the known fare, the recognized fare. ‖ *ʔilli ma-yiʕraf-ak yighal-ak [prov]* ≈ to know you is to appreciate you. *- ʕoolit m-aʕraf-ʃ[i] raḥt-ik ya nafs-i [prov]* saying 'I don't know' is the easiest way out. *- (min il-)maʕruuf ʔinn ...* it is well known that ..., as in *maʕruuf ʔinnaha magnuuna* everyone knows she is crazy. **2** to discover, find out. *fiḍilt[i] raayiḥ gayy[i] min γeer fayda l-ḥadd[i] ma ʕrift innu ʕaayiz filuus* I went on coming and going to no avail till I realized that he wanted some money. *ruuḥ iʕraf mawaʕiid is-sinima* go and find out the cinema times. **3a** to recognize, distinguish. *ma-ʕrift[i]-kii-ʃ wi-nti labsa naḍḍaara* I didn't recognize you in your glasses. **3b** to show consideration for. *ʔil-ʕaalam hina ma-yiʕrafuu-ʃ baʕḍ* people here show no consideration for one another. ‖ *ma-yiʕraf-ʃ[i] ʔabuu* (1) he is completely impartial. (2) he would ride roughshod over (anyone, even) his father. **4** to experience, suffer. *ʕirift il-ʕaswa wil-ḥiʕd* I knew suffering and the malice of others. — /preverb/ **5a** to have the ability to. *tiʕraf tiʕuum* can you swim? **5b** to manage to. *ma-kanit-ʃ[i] ʕarfa tnaam* she couldn't get to sleep. ‖ *tiʕraf* could you (do)? would you mind (doing)? *tiʕraf tigib-li ʕilbit sagaayir* could you get me a packet of cigarettes? - vn *maʕrifa*; ava *ʕaarif*; pva *maʕruuf*.

¶ *ʕirif li-* to be conversant with, understand the workings of. *siib il-ḥanafiyya - ʔana ʔaʕraf laha* leave the tap - I know how to make it work. ‖ *ʔana mif ʕaarif luku baʕa* I'm sick of trying to make you out, I'm fed up with your ways.

معرفة *maʕrifa, miʕrifa* /n pl *maʕaarif*/ **1** knowledge, understanding. ‖ *bi-maʕrift-ak* at your discretion, as you think best. *- waziir il-maʕaarif [obsol]* Minister of Education. *- dayrit maʕaarif* encyclopaedia. **2** friendship. *kutr is-salaam yiqill il-miʕrifa [prov]* ≈ excessive formality stunts the growth of friendship. **3** acquaintance(s), friend(s). *ʔiḥna maʕzumiin ʕand[i] naas maʕrifit-na* we're invited out to some acquaintances of ours. *luu ḥadd[i] maʕrifa fil-maḥkama* he knows someone at the court.

معروف *maʕruuf* **1** /n/ kind treatment, favour. *ma-yinsaa-ʃ il-maʕruuf γeer il-xasiis [prov]* only a base man forgets kindness shown him. *ʔil-maʕruuf sayyid il-ʔaḥkaam [prov]* kindness is the best guide in judging (others). ‖ *ʔiʕmil maʕruuf* please! *tiʕmil maʕruuf tigib-li gurnaal* would you be so kind as to get me a paper? *- xallii-ha bil-maʕruuf* let's keep things friendly! let's not quarrel! *- la bil-maʕruuf wala bil-matluuf* never (will I do what you say)! *- rabb-i-na ydiim il-maʕruuf* may Our Lord preserve this kindly feeling (that's between us), Lord preserve our friendship. **2** /prop n/ district in central Cairo between Champollion and Ramses Streets.

عرف *ʕurf* /n/ **1** custom, practice. *ḥasab il-ʕurf* according to custom. — /pl *ʕuruuf, ʕiraaf*/ **2** branch (of a tree). **3a** mane (of a horse). **3b** crest, comb (of a rooster). ‖ *ʕurf id-diik [bot]* love-lies-bleeding (Amaranthus candatus).

عرفى *ʕurfi* /adj/ according to custom. *ʔil-gawaaz il-ʕurfi* common-law marriage (the offspring of which are nevertheless regarded as legitimate). *maglis ʕurfi* (1) *[leg, obsol]* court of common law. (2) gathering of arbiters and interested parties to resolve a dispute. ‖ *ʔaḥkaam ʕurfiyya* martial law.

عرفة *ʕarafa* /prop n/ Arafa, a hill near Mecca. ‖ *yoom ʕarafa [Isl]* the ninth day of the pilgrimage month and the eve of the Greater Feast *(ʔil-ʕiid ik-kibiir)*, passed by the pilgrims on the hill of Arafa.

عرفات *ʕarafaat* = *ʕarafa*.

عريف *ʕariif* /n pl *ʕurafa*/ **1** assistant to the master of a *kuttaab*. **2** *[mil]* corporal. **3** /pl also *ʕurfaan*/ *[Chr]* cantor (elevated synonym for *miʕallim* in the Coptic church).

عرّاف *ʕarraaf* /n */ one who consults jinn or the stars about the future.

عرّيف *ʕarriif: ʔabu l-ʕarriif [deris]* know-all. *ʕaamil ʔabu l-ʕarriif* he's making out he knows everything.

معرفة *maʕrafa* /n pl *-aat*/ mane (of, e.g., a horse).

اتعرف *ʔitʕaraf[1]* /vi/ to be or become known, be recog-

nized. *ʕid-dukkaan itʕarafit* the shop became known. *ʕiṭ-ṭaalib iz-zaki b-yitʕirif ʕala ṭuul* a bright student gets noticed straight away. ‖ *ʕig-gawaab yitʕirif min ʕinwaan-u [prov]* (a letter is known by its address) ≈ you can tell a book by its cover. - iva *mitʕirif*.

انعرف *ʕinʕaraf*[1] = *ʕitʕaraf*[1]. - iva *minʕirif*.

عرّف *ʕarraf* /vt/ **1** to inform (s.o.) of (s.th.). *ʕil-garas bi-yʕarraf il-mutafarrigiin ʕinn il-faṣl it-taani ḥa-yibda* the bell informs the audience that the next act will begin. *ʕarraf-ni ṭariiq kanz*[i] *fil-ʕarḍ* he told me the way to a buried treasure. ‖ *ʕeef ʕarraf* ... however should ... know? as in *ʕeef ʕarraf-ni ga walla laʔ* how do you expect me to know whether he has arrived or not. *ʕuskut - ʕeef ʕarraf-ak fil-mawḍuuʕ da* shut up! you don't know anything about the subject! **2** to introduce, acquaint. *ʕarraf-ni biihum* (or *ʕaleehum*) he introduced me to them. *laazim ʕaʕarraf-ku bi-blad-na* I must acquaint you with our country. **3** to define. - vn *taʕriif*; ava/pva *miʕarraf*.

تعريف *taʕriif* /n pl *-aat, taʕariif*/ definition.

تعريفة *taʕriifa* /n/ **1** /pl *-aat*/ classified list of charges, tariff. *taʕriifa gumrukiyya* customs tariff. *ʕutubiis taʕriifa muwaḥḥada* a flat-rate fare bus. **2** half a piastre, a half-piastre piece. *talaata taʕriifa* one and a half piastres. *xamsa taʕriifa* two and a half piastres. *ma-ʕandii-ʃ wala taʕriifa* I'm penniless.

اتعرّف *ʕitʕarraf* /vi/ **1** to be introduced, become acquainted, get to know. *ʕitʕarraft*[i] *b-gadaʕ* (or *ʕala gadaʕ*) *sawwaaq fit-turmaay* I became acquainted with a fellow who was a driver on the trams. **2** to make an identification. *ʕis-saayiḥ itʕarraf ʕala ʃanṭit-u* the tourist identified his suitcase. **3** to be defined. - vn *taʕarruf*[ɬ]; ava/iva *mitʕarraf*.

اتعارف *ʕitʕaarif* /vi/ to become mutually acquainted. - ava *mitʕaarif*.

اعترف *ʕiʕtaraf* /vi/ **1a** to confess, admit. *ʕiʕtaraft*[i] *bil-gariima* I confessed to the crime. *bi-yiʕtirif bi-ʔillit il-ʕadab* he admits to (his) rudeness. **1b** *[Chr]* to confess one's sins, go to confession. **2** to give recognition, show acknowledgement. *ʕiʕtarafu bil-ḥukuuma g-gidiida* they recognized the new government. *laazim tiʕtirif bil-gimiil* you must acknowledge a favour shown. *muʕtaraf bi-* recognized as valid, as in *ʕif-fihaada di muʕtaraf biiha f-maṣr* this certificate is recognized as valid in Egypt. - vn *ʕiʕtiraaf*; ava *muʕtarif, miʕtirif*; pva *muʕtaraf*.

اعتراف *ʕiʕtiraaf* /n pl *-aat*/ confession, admission. ‖ *ʕabb iʕtiraaf-i [Chr]* the priest to whom I make confession.

استعرف *ʕistaʕraf*[ɬ] /vi/ **1** to identify, recognize. *ma-ḥadd*[i] *-ʃ istaʕraf ʕal-ism-i-da* no one recognized this name. **2** to get acquainted. *ʕistaʕraft*[a] *ʕala gadaʕ ṭayyib xad-ni mʕaa* I got to know a good fellow who took me with him. - ava *mistaʕraf*.

² ع ر ف

عرف *ʕaraf (u)* /vt/ to give (s.o.) a nose-bleed. *ḍarab-u w-ʕaraf-u* he struck him and made his nose bleed. - vn *ʕarfa*; ava *ʕaarif*; pva *maʕruuf*.

اتعرف *ʕitʕaraf*[2] /vi/ to be given a nose-bleed. - iva *mitʕirif*.

انعرف *ʕinʕaraf*[2] = *ʕitʕaraf*[2]. - iva *minʕirif*.

ع ر ق

عرق *ʕiriq (a)* /vi/ to sweat, perspire. *kunt*[i] *f-ʕizz if-fita ʕaʕraq zayy*[i] *lamma ʕakuun mistaḥammi* I used to sweat in the depths of winter just as I do when I've had a bath. - vn *ʕaraq*; ava *ʕarqaan*.

عرق *ʕaraq* /n/ **1** sweat, perspiration. *bid-damm*[i] *wil-ʕaraq wid-dumuuʕ* with blood, sweat and tears. *banaa b-ʕaraq-u* (or *bi-ʕaraq gibiin-u*) he built it with the sweat of his brow. *ʕaraq il-ʕafya* ≈ may your perspiration be the sign of returning health (said to a sick person who is perspiring)! *baqa ʕaraq-u maraq-u* he became very embarrassed. **2**↓ payment for labour or share given to one involved in a small transaction. *ʕig-gammaala b-yaxdu ʕaraq-hum ʏalla w-dura* the camel drivers get their cut in wheat and maize. **3** (also *ʕaraq balaḥ*) arrack, colourless spirit made from dates, (loosely also) ouzo, raki.

عرقى *ʕaraqi* /n/ arrack, colourless spirit made from dates, (loosely also) ouzo, raki.

عرقيّة *ʕaraqiyya* /n pl *-aat*/ *[obsol]* cotton skullcap, usually worn under turbans and other headgear.

عرق *ʕirq* /n pl *ʕuruuq*/ **1** vein. *xadt*[i] *ḥuqna fil-ʕirq* I had an intravenous injection. ‖ *ʕirq in-nisa* sciatica. *-ʕirq*[i] *gamb*[i] *widn-u-hum ma-yḥibb*[i] *-ʃ miraat ibn-u-hum [prov]* (a vein next to their ears doesn't like their daughter-in-law) ≈ mothers can never bring themselves to like their daughter-in-law. **2** tendon, sinew. **3a** stalk, stem. ‖ *ʕirq*[i] *dahab* ipecacuanha. *-ʕirq*[i] *suus* liquorice root, liquorice. **3b** vein (of a leaf). **4a** seam, vein (in rock). **4b** streak, vein-like mark. **5** beam (of wood). — /no pl/ **6** breeding, stock, descent. ‖ *ʕil-ʕirq*[i] *dassaas* or *ʕil-ʕirq*[i] *ymidd*[i] *l-saabiʕ gidd* ≈ like father like son. **7** body, texture, (stiff) consistency, viscosity. ‖ *raagil ʕirq* a strong man.

عراق *ʕuraaq* /n/ *[mus]* mode in Arabic music beginning on B half flat and having E half flat.

العراق *ʕil-ʕiraaq* /prop n/ Iraq.

عراقي ʕiraaqi **1** /adj */ Iraqi. ‖*wizz*^{i} *ʕraaqi* swans. **2** /n */ an Iraqi.

عرّاقة ʕarraaqa /n pl *-aat*/ saddle blanket.

عرّاقيّة ʕarraqiyya /n pl *-aat*/ = *ʕaraqiyya*.

عرّق ʕarraq /vt/ **1** to cause to sweat. *ma-tgarrii-f il-ḥuṣaan ʃaḥsan tiʕarraq-u* don't make the horse run or you'll make him sweat. **2**↓ to give (s.o.) a cut (on a transaction). **3** to make streaks in. - vn *taʕriiq*; ava/pva *miʕarraq*.

اتعرّق ʃitʕarraq /vi/ passive of *ʕarraq*. - iva *mitʕarraq*.

ع ر ق ب

عرقوب ʕarquub /n pl *ʕaraqiib*/ **1** Achilles' tendon (in man), hamstring (in quadrupeds). ‖*kull*^{i} *waaḥid miʕallaq min ʕarquub-u* ≈ every one must take the blame for his own mistakes. - *ʃumm*^{a} *ʕaraqiib [deris]* a skinny woman. **2** *[constr]* corner angle between two walls.

عرقوبة ʕarquuba /n pl *ʕaraqiib*/ **1** = *ʕarquub*. **2** *[rur]* crack in the earth.

عرقب ʕarqab /vt/ **1** to hamstring (an animal). **2** to put a stop to, make an end of. - vn *ʕarqaba*; ava/pva *miʕarqab*.

اتعرقب ʃitʕarqab /vi/ passive of *ʕarqab*. - iva *mitʕarqab*.

ع ر ق ص

عرقص ʕarqaṣ /vt/ to entangle, confuse, tie in knots. *ʃaʕr*^{i} *mʕarqaṣ* tangled hair. ‖*ṣawaabiʕ miʕarqaṣa* gnarled fingers. - vn *ʕarqaṣa*; ava/pva *miʕarqaṣ*.

اتعرقص ʃitʕarqaṣ /vi/ to be entangled, be confused, be tied in knots. - iva *mitʕarqaṣ*.

ع ر ق ل

عرقل ʕarqal /vt/ to hinder, complicate, make difficult. - vn *ʕarqala*; ava/pva *miʕarqal*.

اتعرقل ʃitʕarqal /vi/ to be hindered, be complicated, be made difficult. - iva *mitʕarqal*.

ع ر ك

عركة ʕarka /n pl *-aat*/ fight between two groups, gang fight, brawl.

معركة *maʕraka* /n pl *maʕaarik*/ battle, struggle.

عارك ʕaarik /vt/ to fight with, struggle with. - vn *miʕarka*; ava/pva *miʕaarik*.

اتعارك ʃitʕaarik /vi/ to fight, join battle. *ma-titʕarkuu-ʃ ʕal-ʃakl* don't fight over the food! - ava *mitʕaarik*.

ع ر م

عرمة ʕurma /n pl *ʕuram*/ *[agric]* pile, heap (especially of a harvested crop).

عرّم ʕarram /vt/ *[agric]* to form (a harvested crop) into piles. - vn *taʕriim*; ava/pva *miʕarram*.

اتعرّم ʃitʕarram /vi/ passive of *ʕarram*. - iva *mitʕarram*.

ع ر م و س

عرموس ʕarmuus <Gr *armos*> /n pl *ʕaramiis*/ seam, join (e.g., between bricks, planks, parts of a sail). - also *ʃarmuus, ʕarnuus*.

ع ر ن س

عرناسي ʕirnaasi /n/ pattern used in *maʃrafiyya* work.

ع ر ن و س

عرنوس ʕarnuus <Gr *armos*> /n pl *ʕaraniis*/ seam, join (e.g., between bricks, planks, parts of a sail). - also *ʃarmuus, ʕarmuus*.

ع ر و

عروة ʕirwa /n pl *-aat, ʕaraawi, ʕiraw*/ **1a** buttonhole. **1b** belt loop, belt carrier. **2** *[naut]* bight. ‖*ʕirwa ḥitta waḥda* endless bowline hitch. - *ʕirwa baḥri* running bowline hitch. **3** *[agric]* planting season. *ʃil-ʕirwa ṣ-ṣefiyya* the summer planting season. **4** *[coarse]* woman, female.

ع ر و س

عروس ʕaruus /n/ Marone labrax, a type of bass found in the Nile and in the Mediterranean. - also *ʕaruuṣ*.

ع ر ى

عرى ʕiry /n/ **1** nakedness. **2** *[rur]* loose overshirt.

عريان ʕiryaan /adj * and pl *ʕaraaya*/ naked. *laazim tisiib raas-ak ʕiryaana* you must leave your head uncovered. *ʕiryaniin zayy*^{i} *ma wildit-hum ʃumm-u-hum* naked as the day they were born. *ʕiryaan malṭ* stark naked.

عرّى ʕarra /vt/ to lay bare, strip, expose. *ʕarri ṭiiz-ak lid-dababiir wi-ʕuul ya rabb inta ʕadiir [prov]* (expose your backside to the wasps and then ask for God's help) ≈ don't complain at the results of your own stupidity. - vn *taʕriyya, taʕriya*↑; ava/pva *miʕarri*.

تعرية *taʕriya*↑ /n/ erosion. *ʃil-baḥr*^{i} *min ʕawaamil it-taʕriya* the sea is one of the causes of erosion.

اتعرّى ʃitʕarra /vi/ to be laid bare, be stripped, be exposed. - iva *mitʕarri*.

ع ز ب ¹

أعزب ʃaʕzab¹↑ = *ʕaazib*.

عازب ʕaazib /n pl *ʕuzzaab*/ bachelor, celibate. ‖*ʕaazib dahr*^{i} *wala ʃarmal ʃahr [prov]* it is easier to be a bache-

lor for a lifetime than a widower for a (single) month.
عازبة ʕazba /n pl ʕuzzaab/ spinster.
عزبة ʕazaba /n pl -aat/ = ʕazba.
عزوبة ʕuzuuba[1] /n/ bachelorhood, celibacy.
عزوبيّة ʕuzubiyya = ʕuzuuba.

[2] ع ز ب
عزبة ʕizba /n pl ʕizab/ **1** country estate consisting of a manor house and labourers' dwellings surrounded by farmland. **2** hamlet which was formerly such an estate, and which is under the jurisdiction of the ʕumda of a village. ‖*ʕizbit in-naxl* Ezbet en-Nakhl, an area in north-east Cairo.

[3] ع ز ب
عذاب ʕazaab /n pl -aat/ torture, torment.
عذّب ʕazzib /vt/ **1** to torture, torment. *rabb-i-na ḥa-yʕazzib-ak* God will torment you (in hell-fire). **2** to cause to suffer, give a hard time to, give hell to. *misk-u l-buliiṣ wi-ʕazzib-u fwayya* the police took him and knocked him about a bit. *ʃil-ʕarabiyya ʕazzibit-ni ṣ-ṣubḥ* the car gave me a lot of trouble this morning. *ʃiddaa-ni f-fuxl[i] da ʕafaan yiʕazzib-ni* he gave me this job to make me suffer. - vn *taʕziib*; ava/pva *miʕazzib*.
اتعذّب ʃitʕazzib /vi/ **1** to be tortured, be tormented. **2** to be made to suffer, be given a hard time. - iva *mitʕazzib*.

[4] ع ز ب
عذب ʕazb /adj/ sweet, pleasant. ‖*mayya ʕazba* fresh water.
أعذب ʔaʕzab[2] /el/ more/most sweet or pleasant.
عذوبة ʕuzuuba[2] /n/ sweetness, pleasantness.

ع ز ر
عذر ʕazar *(u)* /vt/ **1** to excuse and sympathize with, make allowances for. *ʃana ʕazr-ak maʕa l-ʕiyaal di kull-a-ha* I sympathize with you, with all these children around. **2** to place in straits, cause to be hard up. *maṣariif il-madrasa ʕazarit-ni f-fahr-i-da* the school fees have put me in a tight spot this month. *ʃana maʕzuur (fil-filuus)* I'm hard up (for money). - vn *ʕuzr*; ava *ʕaazir*; pva *maʕzuur*.
عذر ʕuzr /n pl ʔaʕzaar/ excuse. *ʃana ɣalṭaan - tiqbal ʕuzr-i* I am wrong; accept my apology. ‖*ʃin-naas ʔaʕzaar* everyone has his problems.
معذور maʕzuur /adj */ mentally deficient, touched.
عذراء ʕazraaʔ **1** /adj pl ʕazaara/ virgin. **2** /n/ *ʃil-ʕazraaʔ* **2a** *[astrol]* Virgo. **2b** (also *ʃil-ʕadra*) the Virgin Mary.

اتعذر ʃitʕazar /vi/ **1** to be in straits, be hard pressed. *ʃitʕazart[i] fwayya f-ʔawwil if-fahr* I was a bit hard up at the beginning of the month. **2** to become mentally deranged. - ava *mitʕizir*.
انعذر ʃinʕazar = ʃitʕazar. - vn *ʃinʕizaar*; ava *minʕizir*.
أعذر ʔaʕzar /vi/: *laqad ʔaʕzara man ʔanzar [prov]* he who allows you time to mend your ways by giving you a warning has every justification to act against you if you do not act accordingly.
اعتذر ʃiʕtazar /vi/ to apologize, excuse oneself. *ḥa-yiʕtizir ʕan illi ḥaṣal* he will apologize for what happened. *baʕat-li waraqa bi-yiʕtizir fiiha ʕan il-migiyy* he sent me a note in which he excuses himself from coming. - vn *ʃiʕtizaar*; ava *miʕtizir*.

ع ز ر ء
عزرائيل ʕazraʔiil /prop n/ Azrael, the Angel of Death, the Angel who removes the soul from the body. *ga-k ʕazraʔiil il-moot* ≈ I hope you die!

ع ز ر ن
عزرنة ʕazrana /n/ **1** rage, fury. **2** stubbornness, recalcitrance.
معزرن miʕazran /adj/ **1** enraged, furious. **2** stubborn, recalcitrant.
اتعزرن ʃitʕazran /vi/ **1** to become enraged. **2** to become stubborn, behave stubbornly. - ava *mitʕazran*.

ع ز ز
عزّ ʕazz *(i)* /vt/ **1** to hold dear, cherish, prize. *b-aʕizz-u zayy axuu-ya* I love him like a brother. *bi-yʕizz[i] nafs-u* he holds himself in high esteem. ‖*(rabb-i-na) yiʕizz[i] miqdaar-ak* ≈ may your position be enhanced! (the conventional reply to *xaṭwa ʕaziiza*). — /vi/ **2** to become great, become powerful. *ʕazza man qanaʕ [prov]* ≈ contentment is the source of strength. *ʔallaahu ʕazza wa-gall* God, Almighty and Glorious is He. **3** to become rare. *ʃil-fuluus ʕazzit il-ʔayyam-di* money has become hard to find these days. - vn *ʕizz*; ava *ʕaaziz*.
¶ *ʕazz[a] ʕala* to be hard on, be difficult to bear. *yiʕizz[a] ʕaleena ʃinnak ḥa-tsib-na* the thought of your leaving us is hard to bear. - *ʕazz[a] ʕan* to withold from, as in *ma kunt[a]-ʃ ʔaʕizz-u ʕannak* I would not withhold it from you (were it in my power to provide it) (a polite formula used in refusing a request).
عزّ ʕizz /n/ **1** wealth, riches. ‖*ʃibn[i] ʕizz* ≈ one born with a silver spoon in his mouth. - *yiduum il-ʕizz* ≈ may you always have plenty (said to a host). - *ʔayyaam il-ʕizz* ≈ the good old days. **2** /in constr/ the peak of intensity of. *ʕizz if-fooq* the height of desire. *ʕizz il-leel*

the depths of night. *ʕizz il-ḍuhr* the peak of the noontime heat. *ʕizz iʃ-ʃita* the depths of winter. *ʕizz il-ʕumr* the prime of life. ‖*ʕizz il-ḥabaayib* the truest of friends.

عزّة *ʕizza* /n/ **1** power, might, honour. *wi-ʕizzit illaah* by the glory of God! **2** (also *ʕizzit nafs*) self-esteem, self-respect, pride. *xadit-u l-ʕizza w-ṭarad-ni barra* he became outraged and threw me out.

عزّيّة *ʕizziyya* /n/ endearing quality. ‖*ʕizziyyit nafs* self-esteem.

أعزّ *ʔaʕazz* /el/ **1** more/most dear or precious. **2** more/most scarce.

عزيز *ʕaziiz* /adj pl *ʕuzaaz*/ **1** dear, precious. *miraat-i ʕaziiza ʕalayya* my wife is dear to me. ‖*ḥabb il-ʕaziiz [bot]* chufa, earth almond (Cyperus esculentus). **2** scarce.

عزيزى *ʕaziizi: xaʃab ʕaziizi* pine. *ʕinab ʕaziizi* type of grape resembling the *fayyuumi* but larger.

معزّة *miʕazza* /n/ affection, esteem.

اتعزّ *ʔitʕazz* /vi/ to be prized, be cherished. ‖*ma-kan-ʃ itʕazz* it would not be withheld (were it in my power to provide it) (a polite formula used in refusing a request). - iva *mitʕazz*.

انعزّ *ʔinʕazz* = *ʔitʕazz*. - iva *minʕazz*.

عزّز *ʕazziz* /vt/ to provide backing for, back up, support. *ʔil-mudiir ʕazziz markaz-i* (or *mawqif-i*) the director backed me up. *ma-tiqdar-ʃ[i] taaxud sulfa mil-bank[i] min ɣeer ḥadd[i] ma yʕazziz-ak* you can't get a loan from the bank unless someone provides backing for you. - vn *taʕziiz*; ava/pva *miʕazziz*; pva *muʕazzaz*†.

اتعزّز *ʔitʕazziz* /vi/ **1** to be backed up, be supported. **2** to refuse out of pride what one really desires, stand on one's dignity. *ṭalabuu-ha tʕazzizit fatuu-ha tnaddimit [prov]* (they asked for her hand and she was coy, but when they passed her over she was sorry) he who plays hard-to-get may find himself passed over. - ava/iva *mitʕazziz*.

اعتزّ *ʔiʕtazz* /vi/ to pride oneself, boast. *ʔinta muʕtazz[i] b-nafs-ak xaaliṣ* you are very proud. - vn *ʔiʕtizaaz*; ava *muʕtazz*.

استعزّ *ʔistaʕazz* /vt/ to pride oneself, boast. *mistiʕizziin bi-ʃawlad-hum* they feel very proud of their children. - ava *mistiʕizz*.

ع ز ف

عزف *ʕazaf (i)* **1** /vt/ to play (music or a musical instrument). *bi-tiʕzif il-biyaanu* she plays the piano. *b-aʕzif samaaʕi* I play by ear. **2** /vi/ to play, emit music. *bi-yiʕzif nafaaz* it plays out of tune. - vn *ʕazf*; ava *ʕaazif*; pva *maʕzuuf*.

عازف *ʕaazif* /n */ player, instrumentalist.

اتعزف *ʔitʕazaf* /vi/ to be played (of music or a musical instrument). - iva *mitʕizif*.

ع ز ق

عزق *ʕazaq (a)* /vt/ **1** to dig over, till, hoe (soil) preparatory to planting. *bi-niʕzaq il-ʃarḍ[i] bil-faas* we break up the soil with the hoe. **2** to beat, hit. *ḥ-aʕzaq-ku bin-nabbuut* I'll beat you with a stick! - vn *ʕazq, ʕaziiq*; ava *ʕaaziq*; pva *maʕzuuq*.

عزقة *ʕazqa* /inst n, pl *-aat*/ a tilling, a hoeing (of the soil).

اتعزق *ʔitʕazaq* /vi/ **1** to be dug over, be tilled, be hoed (of soil). **2** to be beaten, be hit. - iva *mitʕiziq*.

ع ز ل [1]

عزل *ʕazal (i)* /vt/ **1** to separate, segregate, isolate. *ʕazalu l-maḥmumiin fil-mustaffa* they isolated the fever patients in the hospital. ‖*ʕazal il-kahraba* to disconnect the electricity. **2** to insulate. *ʔik-kawitʃ[i] b-yiʕzil-u min il-ḥadiid* the rubber insulates it from the metal. **3** to alienate. *ʕazal siyasiyyan* to deprive of political rights. **4** to depose, dismiss. *baʕd is-sawra ʕazaluu ʕan il-wizaara* after the revolution they sacked him from the ministry. - vn *ʕazl*; ava *ʕaazil*; pva *maʕzuul*.

عزل *ʕazl* /n/ quarantine area, isolation area.

عازل *ʕaazil* /n pl *ʕawaazil*/ insulator.

أعزل *ʔaʕzal* /adj, fem *ʕazla*, pl *ʕuzl*/ unarmed, defenceless. *ʔil-qitaal il-ʔaʕzal* unarmed combat.

عزال *ʕizaal* /n/ **1** furnishings, household effects. **2** *[coarse]* sexual organs (of a male).

عزويلة *ʕizweela* /n pl *ʕazawiil*/ **1** giblet. **2** piece of furniture.

معزل *maʕzal* /n pl *maʕaazil*/ quarantine area, isolation area.

اتعزل *ʔitʕazal* /vi/ passive of *ʕazal*. - iva *mitʕizil*.

انعزل *ʔinʕazal* = *ʔitʕazal*. - vn *ʔinʕizaal*; iva *minʕizil*.

عزّل *ʕazzil* /vi/ to move house. *ʔilli kaanu sakniin fiʃ-faqqa di ʕazzilu* the people who were living in this apartment moved. - vn *taʕziil*; ava *miʕazzil*.

اعتزل *ʔiʕtazal*† /vt/ to abandon, give up. *ʔiʕtazalu s-siyaasa* they have given up politics. - vn *ʔiʕtizaal*; ava *miʕtizil*.

ع ز ل [2]

عذول *ʕazuul* /n pl *ʕuzzaal, ʕawaazil*/ **1** jealous person who attempts to interfere between intimates or lovers. *leeh il-ʕawaazil ḥasdin-ni - dool ḥaqq-u-hum yibku ʕalayya* why do the jealous envy me? they should weep for me! (from a song) — *ʕawaazil* /pl n/ **2** personal critics. censorious people. *ʔizzaay tismaʕ kalaam il-*

ʕawaazil how can you pay attention to what (my) enemies say?

ع ز م

عزم ʕazam (i) /vt/ **1** to invite. *laazim tiʕzim ʃumm-ak tiigi* you must invite your mother to come. *ʕazamnaa ʕal-ɣada* we invited him to lunch. *ruḥna l-ḥafla w-laqenaa-hum ʕazmiin naas kitiir ʠawi* we went to the party and found they had invited lots of people. — /vi/ **2** to proffer an invitation (out of politeness). *ʕazamit ʕag-giraan bil-ʕeef is-suxn* she offered freshly-baked bread to the neighbours. *ʃana ɣariib ʕalaʃaan tiʕzimu ʕalayya kida* am I a stranger that you should feel compelled to keep pressing me (e.g., to eat) like this? **3** to decide, resolve, determine. *ʃiza ʕazamta fa-tawakkal ʕala llaah* once you've made up your mind trust in God (to help you carry out your resolve). *ʃana ʕazamt*^{i} *xalaaṣ ʕag-gawaaz* I've made up my mind to get married. - vn *ʕazm, ʕuzuuma*; ava *ʕaazim*; pva *maʕzuum*.

عزم ʕazm /n/ **1** resolve, intention, resolution. *ʕala feen il-ʕazm* where do you intend to go? **2** (also *ʕizm*) power, strength, energy. *ʕazm il-mutoor* the power of the engine. *ʕazm-u ʠall* his strength declined. — /pl *ʕuzuum*/ **3** *[mech]* moment.

عزومة ʕuzuuma /n pl *ʕazaayim*/ **1** invitation. ‖*ʕuzuumit marakbiyya* an invitation not seriously intended. **2** (lavish) meal for invited guests. *ʕuzuumit ɣada* a luncheon party. *ʕamalnaa-lu ʕuzuuma f-ʕiid milaad-u* we had a feast for him on his birthday.

معزوم maʕzuum /n pl *maʕaziim*/ guest.

عزيمة ʕaziima /n/ **1** firmness of purpose, determination, resolution. *tiqdar tibaṭṭal is-sagaayir law ʕandak ʕaziima* you can give up cigarettes if you're really determined. **2** /pl *ʕazaayim*/ formula or passage (e.g., of scripture) recited as a charm or to bring about healing.

اتعزم ʃitʕazam /vi/ to be invited. - iva *mitʕizim*.

انعزم ʃinʕazam = ʃitʕazam. - iva *minʕizim*.

عزّم ʕazzim /vi/ to make spells, perform magic. - vn *taʕziim*; ava *miʕazzim*.

تعزيمة taʕziima /n pl *taʕaziim, taʕzimaat*/ spell, incantation.

اتعزّم ʃitʕazzim /vi/ (impersonal) passive of *ʕazzim*. *ʃil-beeḍ da mitʕazzim ʕalee* those eggs have been bewitched. - iva *mitʕazzim*.

اتعازم ʃitʕaazim /vi/ **1** to invite one another. *fiḍlu ʕaʃar daqaayiq yitʕazmu miin yidxul il-ʃawwil* they spent ten minutes inviting each other to go in first. **2** to gather one's strength. *ʃitʕazimt*^{i} *wi-ddeet-u ʠalam* I slapped his face with all the strength I could muster. - ava *mitʕaazim*.

ع ز و

عزوة ʕizwa /n/ support, backing.

ع ز ول see ع ز ل[1] : *ʕizweela*

ع ز ى

عزا ʕaza /n/ **1** paying of condolences. **2** gathering for the paying of condolences to a bereaved family. *ʃil-ʃaɣraab illi gum lil-ʕaza* the strangers who came to pay their condolences. *kaan fii naas bi-yiʕmilu l-ʕaza ʃarbiʕiin leela* there used to be people who sat to receive condolences for forty days. ‖*yigii-ni ʕazaa-k [women]* may I hear news of your death!

معزى maʕza /n pl *maʕaazi*/ place where condolences are offered at a funeral.

عزّى ʕazza /vt/ to console, pay condolences to, comfort. *ga yʕazzii-na* he came to pay his condolences. *kalaam-u ʕazzaa-ni b-ṭariiqa miʃ maʕquula* his words comforted me in an amazing way. - vn *taʕziyya, taʕziya*; ava/pva *miʕazzi*.

تعزية *taʕziyya, taʕziya* /n pl *taʕaazi*/ condolence, solace, consolation.

اتعزّى ʃitʕazza /vi/ to be consoled, receive condolences, be comforted. - iva *mitʕazzi*.

ع س ر

عسر ʕusr /n/ **1** difficulty. *ʕusr*^{i} *haḍm* indigestion. *ʕusr*^{i} *tanaffus* difficulty in breathing. ‖*ʕusr il-mayya* retention of urine. **2** hard times, difficult circumstances. *baʕd il-ʕusr*^{i} *yusr [prov]* ≈ after the clouds the sunshine.

عسر ʕisir /adj/ difficult. *wilaada ʕisra* a difficult birth.

عسرة ʕisra /n/ sultry weather. *ʕisrit misra tʕaffin il-kisra [prov]* the sultry weather of August makes the bread go mouldy.

عسراوى ʕisraawi /adj */ left-handed.

أعسر ʃaʕsar[1]↑ /adj, fem *ʕasra*, pl *ʕusr*/ = *ʕisraawi*.

أعسر ʃaʕsar[2] /el/ more/most difficult or trying.

عسير ʕasiir↑ /adj */ difficult, trying.

عسّر ʕassar /vt/ to make difficult, make trying. *ʃamʃiir yiquul liz-zarʕ*^{i} *siir bala taʕsiir xalli ṣ-ṣuɣayyar yiḥaṣṣal ik-kibiir* (the month of) Amshir (brings vitality and) tells the crops to flourish without any setbacks till the small plants catch up with the big ones. - vn *taʕsiir*; ava/pva *miʕassar*.

اتعسّر ʃitʕassar /vi/ to be made or become difficult or trying. *wilaada mitʕassara* a difficult birth. - ava/iva *mitʕassar*.

ع س س

عسّ ʕass *(i)* /vi/ to grope, feel one's way (in the dark). *ʕasseet ʕala ʃukrit il-baab ʕalafaan ʃaxrug* I felt around for the door handle to let myself out. - vn *ʕass, ʕasasaan*; ava *ʕaasis*.

ع س ع س

عسعس ʕasʕas /vi/ to grope, feel one's way (in the dark). - vn *ʕasʕasa*; ava *miʕasʕas*.

ع س ف

عسف ʕasf /n/ tyranny.

اتعسّف ʃitʕassaf /vi/ to adopt or impose arbitary views or decisions. - vn *taʕassuf*; ava *mutaʕassif*.

تعسّفى taʕassufi /adv/ haphazardly, arbitrarily, at random.

ع س ك ر

عسكر ʕaskar /vi/ to encamp, set up camp. *ʕaskarna gamb iṭ-ṭariiq* we camped beside the road. ‖ *miʕaskar fis-siriir* he stays in bed all the time. - ava *miʕaskar*.

عسكرى ʕaskari /adj */ **1** military, martial. *maglis ʕaskari* military tribunal. *ḥukm[a] ʕaskari* martial law. *maḥkama ʕaskariyya* court martial. *raagil ʕaskari* (1) a military man (of any rank). (2) a military type. ‖ *xilqit-u ʕaskariyya* he has a stern face. — /n pl *ʕasaakir, ʕaskar*/ **2** soldier of the lowest rank, private. ‖ *ʕaskari buliiṣ* policeman. - *ʕaskari muruur* traffic policeman. - *ʕaskar wi-ḥaramiyya* the children's game of 'cops and robbers'. - *ʕaskari maṭaafi* fireman. **3** pawn (in chess). **4** bed-knob.

معسكر *muʕaskar* /n pl *-aat*/ camp, encampment. *muʕaskar ʕamal* work camp.

اتعسكر ʃitʕaskar /vi/ (impersonal) passive of *ʕaskar*. *ʃil-ʃarḍ[i] di ma-yitʕaskar-ʃ[i] fiiha* camping is not allowed on that land. - iva *mitʕaskar*.

ع س ل

عسل ʕasal /n/ **1** (also *ʕasal ʃabyaḍ, ʕasal naḥl*) honey. *ya ʕasal ʃabyaḍ ya tiin [vendor's cry]* figs sweet as honey! ‖ *ʃahr il-ʕasal* honeymoon. - *samn[a] ʕala ʕasal* a harmonious combination, a perfect match. - *ʕasal itlaxbaṭ ʕala laban* ≈ a mess, a hodgepodge. - *(ɣarqaan) fil-ʕasal* (drowning in honey) totally unaware of what's going on (as a result of, e.g., being in love). - *yoom ʕasal wi-yoom baṣal* ≈ some days are good and some bad. - *nahaar-ak zayy il-ʕasal* have a good day! - *kuuz ʕasal* honeydew melon. - *qarʕ[a] ʕasal* pumpkin (Curcubita pepo). - *ʃilli ʕaayiz il-ʕasal yuṣbur ʕala qarṣ in-naḥl [prov]* (he who wants honey puts up with being stung by the bees) be prepared to pay the cost for what you want. **2** (also *ʕasal ʃiswid, ʕasal ʃasmar, ʕasal qaṣab*) molasses, treacle. ‖ *ʕasal wi-ṭḥiina* a harmonious combination, a perfect match.

عسلة ʕasala /n/ type or quality of honey. *ʃil-ʕasala di liiha riiḥa ḥilwa* this type of honey has a pleasant smell.

عسلى ʕasali /adj, often invar/ **1** honey-like, sweet or sticky as honey. *qarʕ[a] ʕasali* pumpkin (Curcubita pepo). **2** light brown. *ʕenee-ha ʕasali* (or *ʕasaliyya*) she has hazel eyes.

عسليّة ʕasaliyya /coll n/ hard stick-shaped confection made from molasses and flour.

عسليّاية ʕasaliyyaaya /pl *-aat*/ unit noun of *ʕasaliyya*.

معسول maʕsuul /adj/ mellifluous. *kalaam maʕsuul* honeyed words.

عسّل ʕassil /vt/ **1** to mix with or soak in honey or molasses. *ʕassil id-duxxaan baqa* it's high time you steeped the tobacco in molasses. — /vi/ **2** to become sweet in taste. *yaah il-baṭaaṭis ʕassilit* my, the potatoes have become sweet (because of bad storage)! **3** to take a nap. *ʃana xalaaṣ laazim ʃaʕassil ʃiwayya* I'm tired out - I must take a nap. ‖ *ʕenee ʕassilit* he dozed off. - vn *taʕsiil*; ava/pva *miʕassil*.

تعسيلة taʕsiila /inst n, pl *-aat*/ a nap.

معسّل miʕassil /n/ preparation of coarse-cut tobacco steeped in molasses and fermented, used for smoking in the *gooza*.

اتعسّل ʃitʕassil /vi/ to be mixed with or soaked in honey or molasses. - iva *mitʕassil*.

ع س م

عثمانى ʕusmaani /adj */ Ottoman, Turkish (of the Ottoman period).

عثمانلى ʕusmanli, ʕusmalli = *ʕusmaani*.

ع س ى

عسى ʕasa /adv/ perhaps. ‖ *ʕasa-lla* let's hope to God (that), as in *ʕasa-lla ma-tinsaa-ʃ* let's hope you won't forget.

ع ش ا ن

عشان ʕaʃaan (also *ʕalaʃaan*) /prep/ **1** for, for the sake of. *ʕaʃaan ʃeeh* what for? why? *ʕaʃaan xaṭr-ak* for your sake. *ʃil-ʃooḍa di ʕaʃaan il-misafriin* this room is for travellers. *ʃana mustaʕidd aḍaḥḥi b-ḥayaat-i ʕalaʃan-ha* I'm ready to sacrifice my life for her. **2** because of, owing to. *ʕaʃaan kida* for that reason. *ʕamaluu-li maḥḍar ʕaʃaan il-ʃihmaal* they slapped a police report on me for my negligence. — /conj/ **3** so that, in order to. *ḥ-awaddi ṣ-ṣawaani l-furn[a] ʕaʃaan yistiwu* I'll take the

baking-trays to the bakery to cook. *ʕattiṣil bii ʕizzaay ɛaʃaan yiɛraf illi ḥaṣal* how can I contact him so that he'll know what happened? *ʕin-naxla b-taaxud waqtᵃ ɛaʃaan tikbar* it takes time for a palm tree to grow. **4** because. *ʕana zaɛlaan minnak ɛaʃaan miʃ bi-tgii-li ʕabadan* I'm annoyed with you because you never come to see me. *bi-nixsil-ha ɛaʃaan bi-tkuun waxda ʕatriba* we wash it because it gets dusty.

ع ش ب

عشب *ɛuʃb* /coll n, pl *ʕaɛʃaab*/ herbage, plant(s). *ɛuʃbⁱ ṭibbi* medicinal plants. *ʕaɛʃaab baḥriyya* seaweed.

عشبة *ɛaʃba, ɛiʃba* /n/ sarsaparilla.

ع ش ر ¹

عشر *ɛaʃr* /n pl *ʕaɛʃaar*/ *[Isl]* certain portion of the Koran recited in one sitting.

عشرى *ɛaʃri* /adj/ decimal. *kusuur ɛaʃriyya* decimal fractions.

عشر *ɛuʃrᵘ* /n/ **1** /pl *ʕaɛʃaar*/ one tenth. **2** /pl *ɛuʃuur*/ tithe.

أعشارى *ʕaɛʃaari* /adj/ decimal.

عشر *ɛaʃar* /num; in constr w foll n pl; usu *ɛaʃart* when followed by n pl ordinarily w initial hamza/ ten. *ɛaʃar banaat* ten girls. *ɛaʃart alaaf* ten thousand. *ɛaʃart iyyaam* ten days.

عشرة *ɛaʃara* /pl *-aat*/ **1** /num; in absol state, in apposition, or w foll n sing in contexts of ordering and itemizing/ ten. *miyya w-ɛaʃara bass* one hundred and ten only. *ṣawabɛ-u l-ɛaʃara* his ten fingers. *ɛaʃara gneeh* ten pounds. *ɛaʃara kiilu* ten kilos. *haat ɛaʃara qahwa* bring ten coffees! *ɛaʃaraat min in-naas* ≈ dozens of people. ‖*baṣam bil-ɛaʃara* to be in complete agreement, give one's full approval. *-kal bil-ɛaʃara* to wolf down one's food. *-ɛamal* (or *qarab*) *ɛaʃara* to masturbate. *-ʕil-ɛaʃara ṭ-ṭayyiba* (points-winning) ten of diamonds in the card game *koomi* (q.v.). *-ʕummᵃ ɛaʃara* ten-piastre piece or note. **2** /n/ round (of a board game), hand (of cards). *ɛaʃarit ṭawla* a round of backgammon.

عشّار *ɛaʃʃaar* /n */ *[Chr]* publican. *da zayy il-ɛaʃʃariin* he's a rapacious sort.

عشرين *ɛiʃriin* **1** /num pl *-aat*/ twenty. *ɛiʃriin yoom* twenty days. *bintⁱ fil-ɛiʃrinaat* a girl in her twenties. *min zamaan fil-ɛiʃrinaat* way back in the 'twenties. **2** *ʕil-ɛiʃriin* /adj invar/ the twentieth.

عاشوراء، عاشورا *ɛaʃuura* /n/ **1** tenth day of Muharram, celebrated by Muslims (a traditional meal of duck, milk and rice, the pudding called *ɛaʃuura* etc. being a feature of this occasion). **2** sweet pudding (based on whole wheat) eaten on the tenth of Muharram.

عاشِر *ɛaaʃirⁱ* /adj/ tenth.

عشّر *ɛaʃʃarⁱ* /vt/ **1** to multiply by ten, make or do tenfold. **2** to tithe. -vn *taɛʃiir*; ava/pva *miɛaʃʃar*.

اتعشّر *ʕitɛaʃʃarⁱ* /vi/ passive of *ɛaʃʃarⁱ*. -iva *mitɛaʃʃar*.

ع ش ر ²

عشر *ɛuʃrᵘ²* **1** /n/ pregnancy (of animals). **2** /adj invar/ pregnant (of animals).

عشرة *ɛiʃra* /n/ association, cohabitation, close friendship.

عشر *ɛuʃar* /adj invar/ *[rur]* pregnant.

عشرى *ɛiʃari* /adj */ sociable, fond of company.

عشار *ɛiʃaar* /fem adj/ pregnant (of animals).

عشيرة *ɛaʃiira* /n pl *ɛaʃaayir*/ kindred, kin.

معشر *maɛʃar:* *ʕabu maɛʃar* /prop n/ a renowned ninth-century astrologer. *ʕil-baraka f-ḥaḍrit-u ʕabu maɛʃar ig-gidiid [joc]* the credit is all his, the new Abu Ma'shar.

عشّر *ɛaʃʃarᵘ²* **1** /vt/ to mate with and make pregnant (especially of animals). **2** /vi/ to become pregnant (of animals). -vn *ɛaɛʃiir*; ava/pva *miɛaʃʃar*.

اتعشّر *ʕitɛaʃʃarᵘ²* /vi/ to be impregnated (of animals). -iva *mitɛaʃʃar*.

عاشر *ɛaaʃirᵘ²* /vt/ to live with, associate intimately with. *ɛaʃirt-u muddit ma kunna fig-ɡeef* I was an intimate of his in the army. *bi-yɛaʃir-ha fil ḥaraam* he's having an illicit affair with her. *min ɛaaʃir il-ɡoom ʕarbiɛiin yoom ṣaar minhum [prov]* if you live with people for forty days you become like them. *ɛaaʃir ɛaaʃir misiir-ak tifaariɡ [prov]* enjoy the company of those you live with while you can, for one day you will be separated (by death).

اتعاشر *ʕitɛaaʃir* /vi/ **1** to be lived with, be associated closely with. *raagil ma-yitɛaʃir-ʃ* a man impossible to live with. **2** to associate closely. -ava/iva *mitɛaaʃir*.

ع ش ر ا ن

عشيران *ɛaʃiraan* /n/ *[mus]* name given to the note A below middle C. ‖*ḥuseeni ɛaʃiraan* mode in Arabic music beginning on A and having B half flat and E half flat.

ع ش ش

عش *ɛiʃʃ* /n pl *ɛiʃuuʃ, ɛiʃaaʃ*/ nest. ‖*ɛiʃʃ il-ɣuraab* /coll n/ mushroom(s), toadstool(s). *-ɛiʃʃ in-naml* (1) *[needlew]* smocking. (2) name given to palm fronds woven decoratively to form a small pyramid.

عشّة *ɛiʃʃa* /n pl *ɛiʃaʃ*/ **1a** hut, shack, hovel. **1b** seaside chalet. **2** coop for chickens, ducks or geese.

عشّش *ɛaʃʃiʃ* /vi/ **1** to nest. ‖*ʕil-ʕummᵘ tɛaʃʃiʃ wil-ʕabbᵘ yṭaffiʃ [prov]* ≈ a mother gathers her children around

her; a father drives them away. **2** to become full of the nests of birds or vermin. *ʃif-fagara ɛaʃʃiʃit* the tree became full of nests. ‖*raas-u ɛaʃʃiʃit* his head is lice-ridden. **3** *[constr]* to become full of cohering lumps of pebbles (of concrete, as a result of bad mixing). - vn *taɛʃiiʃ*; ava *miɛaʃʃiʃ*.

اتعشش ʃitɛaʃʃiʃ /vi/ (impersonal) passive of *ɛaʃʃiʃ*. *ʃif-fagara di tɛaʃʃiʃ fiiha s-sana lli faatit* this tree had nests in it last year. - iva *mitɛaʃʃiʃ*.

ع ش ق

عشق ɛiʃiq *(a)* /vt/ to love passionately. *ʃin saraqt israq gamal wi-ʃin ɛiʃiqt iɛʃaq qamar [prov]* (if you steal, steal a camel, and if you fall in love, fall in love with a beautiful girl) ≈ you might as well be hanged for a sheep as a lamb. - vn *ɛiʃq*; ava *ɛaaʃiq*; pva *maɛʃuuq*.

عشق ɛiʃq /n/ passion, love.

عاشق ɛaaʃiq /n * and pl *ɛuʃʃaaq*/ lover. ‖*ʃil-ɛaaʃiq yiṣalli ɛala gamaal in-nabi* let the lover (i.e. of the Prophet) bless the beauty of the Prophet! (said to solicit blessings as a protection against the evil eye). - *ɛaaʃiq wi-maɛʃuuq [carp]* mortise and tenon joint.

معشوق maɛʃuuq /n */ beloved. ‖*ɛaaʃiq wi-maɛʃuuq* see *ɛaaʃiq*.

عشيق ɛaʃiiq /n pl *ɛuʃʃaaq*/ (male) lover, sweetheart.

عشيقة ɛaʃiiqa /n pl *-aat*/ mistress, sweetheart.

اتعشق ʃitɛaʃaq /vi/ to be loved passionately. - iva *mitɛiʃiq*.

انعشق ʃinɛaʃaq = ʃitɛaʃaq. - iva *minɛiʃiq*.

عشّق ɛaʃʃaq /vt/ **1** to hitch up, attach. *ɛaʃʃaq il-muxṭaaf ɛal-winʃ* hitch the anchor to the winch! **2** to put into gear. *ma-qdirⁱ-ʃ ʃazuqq il-ɛarabiyya ɛaʃaan miɛaʃʃaqa* I couldn't push the car because it was in gear. - vn *taɛʃiiq*; ava/pva *miɛaʃʃaq*.

تعشيقة taɛʃiiqa /inst n, pl *-aat*/ **1** a hitching up, an attaching. **2** a gear change.

اتعشّق ʃitɛaʃʃaq /vi/ passive of *ɛaʃʃaq*. - iva *mitɛaʃʃaq*.

[1] ع ش م

عشم ɛaʃam /n/ hope, expectation. *ɛaʃam-i w-ragaaʃ-i fiik waḥd-ak ya rabb* my hopes are in you alone, Lord! *qaṭaɛ ɛaʃam-hum* he dashed their hopes. *ma-kan-ʃ il-ɛaʃam fiik* I had expected better of you. *da b-ɛaʃam-i fiik* or *da min ɛaʃam-i fiik* I had expected nothing less from you (as a friend). ‖*ɛaʃam-ak ɛaʃam ʃibliis figganna [prov]* (your hope is like that of Satan for Paradise) ≈ you haven't a hope in hell.

عشمان ɛaʃmaan /adj */ hopeful, expectant. *ɛaʃmaan fiina* having high hopes of us.

عشّم ɛaʃʃim /vt/ to make hopeful, encourage. *ɛaʃʃimt-i-ni bil-ḥalaq xarramt ana wdaan-i [prov]* (when you promised me earrings, I went and pierced my ears) ≈ I counted my chickens before they were hatched. - vn *taɛʃiim*; ava/pva *miɛaʃʃim*.

اتعشّم ʃitɛaʃʃim /vi/ **1** to be hopeful or expectant. **2** to be made hopeful or expectant. - ava/iva *mitɛaʃʃim*.

[2] ع ش م

عشماوى ɛaʃmaawi /n pl *-yya*/ hangman, executioner.

ع ش و see ع ش ى : *ɛaʃwa, ɛiʃwiyya, ɛaʃwaaʃi*

ع ش ى

عشى ɛiʃi *(a)* /vi/ to become night-blind. - ava *ɛaaʃi*.

يعشى yiɛʃi /vi imperf only/ to be dim-sighted. *bi-yiɛʃi bi-ɛnee* his eyesight is weak.

عشاء ɛaʃaʾ[1] /n/ evening meal, supper. *ʃil-ɛaʃa ʃeeh il-lelaa-di* what's for supper tonight? ‖*ʃil-ɛaʃa r-rabbaani [Chr]* the Lord's Supper.

عشى ɛaʃaʾ[2] /n/ night-blindness.

عشوة ɛaʃwa /n pl *-aat*/ an evening meal. *kaanit ɛaʃwa tistaahil buqq-ak* it was a delicious dinner.

العشاء العشا ʃil-ɛiʃa /fem n/ **1** the Muslim evening prayer (performed approximately one hour after sunset). **2** the time of the evening prayer.

عشويّة ɛiʃwiyya /n/ time of the *ɛiʃa* (q.v.).

عشيّة ɛaʃiyya /n/ **1** evening twilight. **2** *[Chr]* vespers.

عشوائى ɛaʃwaaʃi **1** /adv/ haphazardly. *da ma-bi-ytimmⁱ-ʃ ɛaʃwaaʃi* it doesn't happen by chance. **2** /adj/ haphazard.

عشّى ɛaʃʃa /vt/ **1** to give or serve an evening meal to. *ḥa-tɛaʃʃii-na ʃeeh* what are you going to give us for supper? **2**↓ to give the daily bread (of the Lord). *rabb-i-na ɛaʃʃaa-na* God has provided. - ava/pva *miɛaʃʃi*.

اتعشّى ʃitɛaʃʃa /vi/ to take an evening meal. *ʃitɛaʃʃeena makaroona* we had macaroni for supper. *ʃitvadda bii qablⁱ ma yitɛaʃʃa biik* (eat him for lunch before he eats you for supper) get him before he gets you. - ava *mitɛaʃʃi*.

ع ص ا see [2] ع ص ى : *ɛaṣa*

ع ص ب

عصب ɛaṣabⁱ *(u)* /vt/ to bind. *niruuḥ laffiin if-feela w-ɛaṣbiin ɛaleeha ɛaṣbⁱ gaamid* then we wrap up the load and bind it tightly. - vn *ɛaṣb, ɛaṣabaan*; ava *ɛaaṣib*; pva *maɛṣuub*.

عصبة ɛaṣba /n pl *-aat, ɛuṣab*/ *[rur]* type of headkerchief worn by women.

عصبة *ɛuṣba* /n pl *ɛuṣab*/ league, band. *ɛuṣbit il-ʔumam* the League of Nations.

عصب *ɛaṣab*[2] /n pl *ʔaɛṣaab*/ **1** nerve. *duktoor ʔaɛṣaab* neurologist. ‖*haddi ʔaɛṣaab-ak* calm down! -*xassaruu-lu ʔaɛṣaab-u* they made him irritable, they put him on edge. -*ʔaɛṣab-ha baqit mafduuda* she became tense. -*ʔaɛṣab-ha tilfit* her nerves were wrecked. -*ʔaɛṣaab-u f-tallaaga* ≈ he's as cool as a cucumber. **2** sinew. ‖*ɛandu ɛaṣab* it is sturdy (of an animal). **3** kinship on the father's side. *di qaribit-na min il-ɛaṣab* she is a relative on our father's side.

عصبى *ɛaṣabi* /adj */ **1a** pertaining to the nerves, nervous. *ʔinhiyaar ɛaṣabi* nervous breakdown. **1b** neurotic. **2** highly-strung, touchy.

عصبيّة *ɛaṣabiyya* /n/ **1** kinship ties. **2** irritability.

عصابة *ɛiṣaaba* /n pl *-aat*/ **1** gang (e.g., of criminals). *ḥarb il-ɛiṣabaat* gang warfare. **2** head-kerchief.

عصيب *ɛaṣiib* /adj/ hard, difficult. *ʔawqaat ɛaṣiiba* hard times, times of stress. *mawqif ɛaṣiib* a difficult situation.

اتعصب *ʔitɛaṣab* /vi/ to be bound. -iva *mitɛiṣib*.

عصّب *ɛaṣṣab* /vt/ to bind with a kerchief. *ɛenee mɛaṣṣaba* he is blindfolded. -vn *taɛṣiib*; ava/pva *miɛaṣṣab*.

اتعصّب *ʔitɛaṣṣab* /vi/ **1** to become fanatical, become a bigot. **2** to be bound with a kerchief. -vn *taɛaṣṣub*; ava/iva *mitɛaṣṣab*.

تعصّب *taɛaṣṣub* /n/ partisanship, fanaticism, bigotry.

اعتصب *ʔiɛtaṣab* /vi/ to form a league, form a union. -vn *ʔiɛtiṣaab*; ava *miɛtiṣib*.

ع ص ج

عصّاج *ɛaṣṣaag* /adj invar/ cooked with onion (and sometimes tomato sauce, parsley etc.) until the juices are absorbed (of minced meat to be used as a component in stuffed vegetables etc.).

عصّج *ɛaṣṣag* /vt/ to cook (minced meat) with onion (and sometimes tomato sauce, parsley etc.) until the juices are absorbed. -vn *taɛṣiig*; ava/pva *miɛaṣṣag*.

اتعصّج *ʔitɛaṣṣag* /vi/ passive of *ɛaṣṣag*. -iva *mitɛaṣṣag*.

ع ص د

عصيدة *ɛaṣiida* /n/ thick gruel made with flour and butter.

ع ص ر[1]

عصر *ɛaṣar (u)* /vt/ to wring, press, squeeze. *bi-tuɛṣur il-ɣasiil* she wrings the washing. *ɛaṣaru minnu z-zeet* they pressed the oil out of it. ‖*ɛaṣaruu fil-imtiḥaan* they gave him a real grilling in the exam. -vn *ɛaṣr, ɛaṣiir*; ava *ɛaaṣir*; pva *maɛṣuur*.

عصرة *ɛaṣra* /inst n, pl *-aat*/ a wring, a press, a squeeze.

عصير *ɛaṣiir* /n/ (extracted) juice. *ɛaṣiir burtuqaan* orange juice.

عصارة *ɛuṣaara* /n pl *aat*/ juice, sap.

عصّارة *ɛaṣṣaara* /n pl *-aat*/ **1** juice-squeezer. **2** mangle, wringer.

معصرة *maɛṣara* /n pl *maɛaaṣir*/ oil press, sugar-cane press.

معصراوى *maɛṣaraawi* /adj */relating to the large limestone quarry of Ma'sara, near Helwan. *ʔiṭ-ṭuub il-maɛṣaraawi b-titbini minnu gawaamiɛ* mosques are built of Ma'sarawi stone.

إعصار *ʔiɛṣaar* /n pl *ʔaɛaṣiir*/ hurricane, tornado, cyclone.

اتعصر *ʔitɛaṣar* /vi/ to be wrung, be pressed, be squeezed. -iva *mitɛiṣir*.

انعصر *ʔinɛaṣar* = *ʔitɛaṣar*. -iva *minɛiṣir*.

ع ص ر[2]

العصر *ʔil-ɛaṣr* /n/ **1** the afternoon. *qahwit il-ɛaṣr* afternoon coffee. ‖*suuq il-ɛaṣr* junk and old clothes market, flea market. **2** the Muslim afternoon prayer, performed any time from the moment half-way between noon and sunset and sunset itself. **3** /pl *ɛuṣuur*/ age, period, epoch. *haruun ir-rafiid ɛaṣr-u* the Harun al-Rashid of his age. *raagil maafi maɛa l-ɛaṣr* a man who keeps up with the times.

العصريّة *ʔil-ɛaṣriyya* /n/ the late afternoon.

العصارى *ʔil-ɛaṣaari* /n/ the time about half an hour before sunset (usually associated with romantic feelings).

عاصر *ɛaaṣir* /vt/ to be contemporary with. *ɛaṣirt il-malik* I was alive in the time of the king. -vn *muɛaṣra*; ava *miɛaaṣir*.

معاصر *muɛaaṣir*[1] /adj */ contemporary. *ʔil-ʔinsaan il-muɛaaṣir* modern man.

ع ص ع ص

عصعوص *ɛaṣɛuuṣ* /n pl *ɛaṣaɛiiṣ*/ **1** drumstick. *ʔibn*[a] *ɛamm-u zayy*[i] *ɛaṣaɛiiṣ in-nuqqariyya* his cousin is as thin as a drumstick. **2** *[anat]* coccyx.

عصعوصى *ɛaṣɛuuṣi* /adj/ coccygeal.

معصعص *miɛaṣɛaṣ* /adj */ skinny, thin.

ع ص ف

عصف *ɛaṣaf (i)* /vi/ to blow violently (of the wind). -vn *ɛaṣf*; ava *ɛaaṣif*; pva *maɛṣuuf*.

عصفة *ɛaṣfa* /inst n, pl *-aat*/ a gust of wind.

عاصفة ʕaaṣifa /n pl ʕawaaṣif/ gale, hurricane.

ع ص ف ر [1]
عصفر ʕuṣfur /n/ carthamus, safflower.
عصفر ʕaṣfar /vt/ *[cook]* to add safflower to. - ava/pva *miʕaṣfar*.
اتعصفر ʔitʕaṣfar /vi/ to have saf-flower added. - iva *mitʕaṣfar*.

ع ص ف ر [2]
عصفور ʕaṣfuur /n pl ʕaṣafiir/ **1** = *ʕaṣfuura*. ‖ *lisaan il-ʕaṣfuur* grain-shaped pasta, graniamo. - *ʕaṣfuur fil-yadd[i] wala ʕafara ʕaʃ-ʃagara [prov]* ≈ a bird in the hand is worth two in the bush. **2** ornamental bird, cage-bird. *maḥall[a] ʕaṣafiir* bird shop.
عصفورة ʕaṣfuura /n pl ʕaṣafiir/ **1** sparrow, (loosely also) any small bird. ‖ *daaqiq ʕaṣafiir* (tattooed with sparrows on each temple, after the manner of many Egyptian peasants; thus used to mean) naive, stupid, as in *ʃana m-anii-ʃ daaqiq ʕaṣafiir* ≈ I'm no country bumpkin, I'm no fool. *ʃil-ʕaṣafiir illi ʕala sdaar-i ṭaaru* I'm not as daft as I used to be. - *ʕaṣafiir baṭn-i bi-tzaqzaq* ≈ I'm ravenously hungry. **2a** small stick, peg, dowel, as for instance on yoke of plough (see Pl.D, 10, 12). **2b** wooden latch.

ع ص ل ج
عصلج ʕaṣlag **1** /vi/ **1a** to jib, balk, resist, be stubborn. *ʃil-bihiima ʕaṣlagit* the beast balked. *zaqqeet beet il-wild[i] w-baqa l-waad yifarfar taḥt[i] ʃiid-i wi-yʕaṣlag* I pressed on the womb and the child started to squirm and resist. *ʃil-mas ʃala mʕaṣlaga maʕaaya* I can't get anywhere with the problem. **1b** to jam, stick. *ʃil-baab miʕaṣlag* the door is stuck. **2** /vt/ to obstruct and jam. *law ma-ddet-luu-ʃ filuus kaan ḥa-yʕaṣlag-li l-mawḍuuʕ* if I hadn't given him money, he would have put a spanner in the works. - vn *ʕaṣlaga*; ava/pva *miʕaṣlag*.
اتعصلج ʔitʕaṣlag /vi/ to be jammed, be wedged. - iva *mitʕaṣlag*.

ع ص م
عصم ʕaṣam *(i)* /vt/ to protect, preserve. - vn *ʕaṣm*; ava *ʕaaṣim*; pva *maʕṣuum*.
عاصمة ʕaṣma, ʕaaṣima[†] /n pl ʕawaaṣim/ capital city.
عصمة ʕiṣma /n/ **1** matrimonial authority. *ʕala* (or *fi-) ʕiṣmit raagil* under the authority and protection of a man, married. **2** power of divorce. *ʃil-ʕiṣma fi-ʃid-ha* she has the right to (unilateral) divorce (by virtue of a stipulation in the marriage contract). *ṣaaḥibat il-ʕiṣma [obsol]* honorific title awarded to women.
عصامي ʕiṣaami /adj */ self-made, distinguished, successful.
معصم miʕṣam /n pl maʕaaṣim/ wrist.
اتعصم ʔitʕaṣam /vi/ to be protected, be preserved. - iva *mitʕiṣim*.
اعتصم ʔiʕtaṣam /vi/ to take refuge. - vn *ʔiʕtiṣaam*; ava *muʕtaṣim*.

ع ص ى [1]
عصى ʕiṣi *(a)* **1** /vt/ to disobey. *mazaag-u yiʕṣa l-ʃawaamir* he's fond of disobeying orders. **2** /vi/ to be obstinately disobedient, rebel. - vn *ʕaṣayaan, ʕiṣyaan*; ava *ʕaaṣi*; pva *maʕṣi*.
عصيان ʕaṣyaan /adj/ rebellious, recalcitrant, disobedient.
معصية maʕṣiya /n pl maʕaaṣi/ sin.
استعصى ʔistaʕṣa /vi/ to prove to be too resistant. *ʃazma staʕṣit ʕala l-ḥall* a crisis that defied all attempts at a solution. - vn *ʔistiʕṣa*; ava *mistaʕṣi, mustaʕṣi*.
مستعصى mustaʕṣi /adj/ incurable (of a disease).

ع ص ى [2]
عصا ʕaṣa /fem n, pl ʕuṣy/ stick, stave. ‖ *liʕb il-ʕaṣa* (or *il-ʕuṣy)* quarterstaff fighting. - *ʔilli ṭfuuf-u raakib ʕala ʕaṣa ḳul-lu mubaarak il-ḥuṣaan [prov]* (he whom you see mounted on a stick, tell him 'congratulations on your horse!') ≈ treat people as they wish to be treated.
عصاية ʕaṣaaya /n pl *-aat, ʕuṣy, ʕuṣyaan, ʕuṣyaan/* stick, rod, staff. *bi-yimʃi b-ʕaṣaaya* he walks with a stick. *ʕaṣaayit daffa* tiller. *ʕaṣaaya ʃiiha singa* sword-stick.

ع ص ى [3]
العاصي ʔil-ʕaaṣi /prop n/ the (river) Orontes (in Syria).

ع ض د
عضد ʕaḍud /n/ upper arm.
عضد ʕaḍḍid /vt/ to help, assist, support. *bi-yʕaḍḍid il-wafd* he supports the Wafd party. - vn *taʕḍiid*; ava *miʕaḍḍid*.
معضد muʕaḍḍid /n */ supporter.
اتعضد ʔitʕaḍḍid /vi/ to be helped, be assisted, be supported. - iva *mitʕaḍḍid*.

ع ض ض
عض ʕaḍḍ *(u)* **1** /vt/ to bite. *ʃik-kalb[a] ʕaḍḍ-i-ni* the dog bit me. **2** /vi/ to perform the action of biting. *ʕaḍḍ[a] ʕala lisaan-u* he bit on his tongue. - vn *ʕaḍaḍaan, ʕaḍḍ*; ava *ʕaaḍiḍ*; pva *maʕḍuuḍ*.

عضّة ʕaḍḍa /inst n, pl -aat/ 1 a bite. 2 *[dent]* block for taking a mould.
عضّاض ʕaḍḍaaḍ /adj */ given to biting.
اتعضّ ʔitʕaḍḍ /vi/ to be bitten. -iva *mitʕaḍḍ*.
انعضّ ʔinʕaḍḍ = ʔitʕaḍḍ.

ع ض ع ض
عضعض ʕaḍʕaḍ /vt/ to gnaw, nibble. *bi-yʕaḍʕaḍ ḍawafr-u* he bites his nails. *ʔil-maqaṣṣ[a] ʕaḍʕaḍ il-waraqa* the scissors chewed up the paper. *ʕirf[i] mʕaḍʕaḍ* a badly-dented piastre coin. -vn *ʕaḍʕaḍa*; ava/pva *miʕaḍʕaḍ*.
اتعضعض ʔitʕaḍʕaḍ /vi/ to be gnawed, be nibbled. -iva *mitʕaḍʕaḍ*.

ع ض ل
عضل ʕaḍal /coll n/ muscle(s). *ḥuqna fil-ʕaḍal* intramuscular injection. -/adjectivally/ *raagil ʕaḍal* a muscle-man, a brawny man.
عضلة ʕaḍala /unit n, pl -aat/ a muscle. ‖*bi-yʕaamil in-naas bi-ʕaḍalaat-u* he treats people roughly, he pushes people around.
عضلي ʕaḍali /adj/ pertaining to the muscles, muscular. *tawaafuq ʕaḍali* muscular co-ordination.

ع ض م
عضم، عظم ʕaḍm /coll n, pl ʕiḍaam, ʕiẓaam/ 1 bone(s). *ʕaliil il-baxt[i] bi-ylaaqi l-ʕaḍm[i] fik-kirfa [prov]* the unlucky man finds bones in tripe. ‖*kalaam fil-ʕaḍm* wounding words. -*ʕaḍm-u ṭari* he is a weak and immature character. -*duktoor ʕiẓaam* orthopaedist. 2 frame, skeleton. *ʕaḍm ik-kursi* the frame of the chair.
عضمة، عظمة ʕaḍma /unit n, pl -aat/ a bone. ‖*ʕaḍma xifna* an influential person, a bigwig. -*ʕaal-u b-ʕaḍmit lisaan-u* he himself said it. -*ʕaḍma zarʕa* pejorative epithet for Copts.
عضماية ʕaḍmaaya /inst n, pl -aat/ a (small) bone.
عظمي ʕaẓmi /adj/ of or pertaining to bone(s). *haykal ʕaẓmi* skeleton.
عضّم ʕaḍḍam /vi/ 1 to become (as) hard (as bone). 2 to become bony. *kibir sinn-u w-ʕaḍḍam* he grew old and lean. -ava *miʕaḍḍam*.
استعضم ʔistaʕḍam /vt/ 1 to select for boniness. 2 to consider (too) bony. *ʔistaʕḍam il-xaruuf* he thought the lamb to be too bony (and wouldn't take it). -vn *ʔistiʕḍaam*; ava/pva *mistaʕḍam*.

ع ض و
عضو ʕuḍw /n pl ʔaʕḍaaʔ/ 1 member. *ʔaʕḍaaʔ il-lagna* the members of the committee. 2 organ (of the body).
عضوي ʕuḍwi /adj/ organic. *ʔil-kimya l-ʕuḍwiyya* organic chemistry. *ɣeer ʕuḍwi* inorganic.
عضويّة ʕuḍwiyya /n/ membership. *kart[a] ʕuḍwiyya* membership card.

ع ط ر د
عطارد ʕuṭaarid /prop n/ *[astron]* Mercury.

ع ط ب
عطب ʕaṭab /n/ damage. *ḥaṣar il-ʕaṭab* he estimated the damage.
معطوب maʕṭuub /adj/ damaged. *gaat iṭ-ṭuuba fil-maʕṭuuba* (the stone came against that which was (already) damaged) there was a coincidence of unfortunate circumstances.
عطّب ʕaṭṭab /vi/ to rot, perish (especially of fruit and vegetables). -vn *taʕṭiib*; ava *miʕaṭṭab*.

ع ط ر
عطر ʕiṭr (also ʕiṭr[↓]) /n pl ʕuṭuur/ 1 perfume. *ʕiṭr il-ward* attar of roses. 2 geranium, stork's-bill. ‖*ʕiṭr[i] ʃaahi* sweet pea.
عطري ʕiṭri /adj/ pertaining to perfume, odoriferous, fragrant, aromatic. *ziyuut ʕiṭriyya* essential oils (for perfume). *ṣabuun ʕiṭri* scented soap.
عطارة ʕiṭaara /n/ 1 spices and herbs. 2 spice and herb trade.
عطّار ʕaṭṭaar /n */ herbalist and seller of spice. ‖*ḥaaga tfawwit il-ʕaṭṭaar xurg-u* ≈ a thoroughly exasperating matter.
عطّر ʕaṭṭar /vt/ to perfume. -vn *taʕṭiir*; ava/pva *miʕaṭṭar*.
¶ *ʕaṭṭar li-*[↓] to purchase the *gihaaz* for (a bride-to-be). *ḥa-nʕaṭṭar-laha min maṣr* we'll buy everything for her *gihaaz* in Cairo.
معطّراتي *miʕaṭṭaraati* /n pl -yya/ perfume-seller.
اتعطّر ʔitʕaṭṭar /vi/ 1 to be perfumed. 2 to perfume oneself. -ava/iva *mitʕaṭṭar*.

ع ط س
عطس ʕiṭis *(a)* /vi/ to sneeze. -vn *ʕaṭs, ʕiṭaas, ʕuṭaas, ʕaṭasaan*; ava *ʕaaṭis*.
عطاس ʕiṭaas, ʕuṭaas /n/ sneezing. *ʔid-dawa da bi-ysabbib il-ʕuṭaas* this medicine induces sneezing.
عطسة ʕaṭsa /inst n, pl -aat/ a sneeze.
عطّس ʕaṭṭas 1 /vt/ to cause to sneeze. 2 /vi/ to sneeze (repeatedly or violently). -vn *taʕṭiis*; ava/pva *miʕaṭṭas*.

ع ط ش [1]

عطش ʕiṭiʃ *(a)* /vi/ **1** to become thirsty. *lamma yiʕṭaf fiwayya yballil riiq-u b-ħaaga* when he gets thirsty he wets his whistle with something. **2** to become parched (of land). - vn *ʕaṭaf*.

عطش ʕaṭaf /n/ thirst.

عطشان ʕaṭfaan /adj */ **1** thirsty. *yiwaddii l-baħr[i] wi-ygiib-u ʕaṭfaan [prov]* (he takes him to the river and brings him back thirsty) he can twist him round his little finger. **2** parched. *ʃil-ʃarḍ[a] ʕaṭfaana* the land needs watering.

ع ط ش [2]

عطشجى ʕaṭaʃgi <T *ateşçi*> /n pl *-yya*/ stoker, fireman (on a locomotive).

ع ط ط

عطّ ʕaṭṭ *(a)* /vi/ to live an unsettled life. - vn *ʕaṭaṭaan, ʕaṭṭ*; ava *ʕaaṭiṭ*.

عطّاط ʕaṭṭaaṭ /n * and pl *ʕaṭṭaaṭa*/ vagabond.

ع ط ف [1]

عطف ʕaṭaf *(i)* /vi/ to show sympathy or concern (either verbally or through practical aid). *ʕaṭafit ʕalee* she sympathized with him. *bi-yiʕṭif ʕala xalq illaah* he helps (poor) people. - vn *ʕaṭf*; ava *ʕaaṭif*.

عطف ʕaṭf /n/ sympathy, affection. *ħaramuu mil-ʕaṭf* they deprived him of affection.

عاطفة ʕaaṭifa /n pl *ʕawaaṭif*/ feeling, emotion, sentiment, passion. *ʃil-ħubb[i] ʃaʕẓam ʕaaṭifa fil-wuguud* love is the greatest emotion in existence. *ʃil-kukayiin bi-yiqtil ʕawaṭf-ak* cocaine deadens your feelings.

عاطفى ʕaaṭifi /adj */ **1** emotional. *muqabla ʕaaṭifiyya* an emotional meeting. **2** sentimental. *yinwa ʕaaṭifiyya* a sentimental song.

¶ *ʕaaṭifiyyan* /adj/ emotionally.

عطوفة ʕuṭuufa: *ṣaaħib il-ʕuṭuufa [obsol]* form of address and reference to a high-ranking pasha ≈ Excellency.

عطوفتلو ʕuṭufitlu /n/ *[obsol]* form of address and reference to a high-ranking pasha ≈ Excellency.

اتعطف ʃitʕaṭaf /vi/ (impersonal) passive of *ʕaṭaf*. *ʃil-yataama laazim yitʕiṭif ʕaleehum* orphans should be treated compassionately. - iva *mitʕiṭif*.

اتعطّف ʃitʕaṭṭaf /vi/ to show kindness. - ava *mitʕaṭṭaf*.

اتعاطف ʃitʕaaṭif /vi/ to be mutually affectionate or sympathetic. - vn *taʕaaṭuf*; ava *mitʕaaṭif*.

استعطف ʃistaʕṭaf /vt/ to beg for kindness. - vn *ʃistiʕṭaaf*; ava/pva *mistaʕṭaf*.

ع ط ف [2]

عطفة ʕaṭfa /n pl *-aat*/ alley, (originally) small lane leading off a *darb* within an enclosed quarter.

ع ط ل

عطل ʕiṭil *(a)* /vi/ **1** to break down. *ʃil-makana ʕiṭlit* the machine has broken down. **2** to become idle, stop working. - vn *ʕuṭl*; ava *ʕaaṭil*.

عطل ʕuṭl /n pl *ʃaʕṭaal*/ breakdown. *ʃaʕṭaal il-kahraba* breakdowns in the supply of electricity.

عطلة ʕuṭla /n/ holiday. *bukra ʕuṭla* tomorrow's a holiday. *ʕuṭlit il-ʃusbuuʕ* weekly day off. ‖*sanit il-ʕuṭla [Jud]* Sabbatical Year.

عاطل ʕaaṭil /adj */ jobless. ‖*ʕaaṭil ʕala baaṭil* ≈ incessantly and to no purpose. - *ʃil-ʕaaṭil fil-baaṭil* ≈ all and sundry, without discrimination, as in *ga l-buliiṣ xad-hum ʕaṭil-hum fi-baṭil-hum* the police came and took them all in.

عواطلى ʕawaṭli /n pl *-yya*/ loafer, shirker.

عطلان ʕaṭlaan /adj */ **1** out of order, broken down. **2** idle, out of action, unemployed.

عطلة ʕaṭala /n/ **1** delay. **2** holiday.

عطّل ʕaṭṭal /vt/ **1** to hold up, delay. *ʃiyyaa-k m-akun-f[i] ʕaṭṭalt-ak ʕan fuxl-ak* I hope I haven't kept you from your work. *rabb-i-na dayman bi-yurzuq-na bi-lli bi-yʕaṭṭal-na* ≈ someone always comes along to delay us. *qaʕad yirxi maʕaaya l-xaayit ma ʕaṭṭal-ni* he sat chattering with me till he made me late. **2a** to cause to break down, cause to stop working. *ʃil-ħaraara ʕaṭṭalit il-makan* the heat made the machines break down. **2b** to invalidate, overrule. *fii qawaniin bi-tinsax qawaniin wi-tʕaṭṭal ʃaħkam-ha* there are laws that abrogate laws and invalidate their stipulations. - vn *taʕṭiil*; ava/pva *miʕaṭṭal*.

اتعطّل ʃitʕaṭṭal /vi/ **1** to be delayed, be held up. *ʃitʕaṭṭalt[i] fis-sikka* I was delayed on the way. **2** to break down. *ʃil-makana tiftaval fiwayya w-titʕaṭṭal fiwayya* the machine works for a while and then breaks down for a while. **3** to be invalidated, be overruled. - ava/iva *mitʕaṭṭal*.

متعطّل *mitʕaṭṭal* /adj */ unemployed.

ع ط ن

عطن ʕaṭan *(u)* /vt/ **1** to soak, steep, macerate, ret (e.g., flax). **2** to cause to become rotten or decayed (through soaking). - vn *ʕaṭn, ʕaṭiin*; ava *ʕaaṭin*; pva *maʕṭuun*.

معطن maʕṭan /n pl *maʕaaṭin*/ tub for soaking flax.

اتعطن ʃitʕaṭan /vi/ **1** to be soaked, be macerated, be retted (of, e.g., flax). **2** to become or be made rotten or

decayed (through soaking). - ava/iva *mitɛiṭin*.
عطّن ɛaṭṭan **1** = *ɛaṭan*. **2** /vi/ to rot, become rotten. - vn *taɛṭiin*; ava/pva *miɛaṭṭan*.
اتعطّن ʔitɛaṭṭan = *ʔitɛaṭan*. - ava/iva *mitɛaṭṭan*.

ع ط ى

عطى ɛaṭa[1] *(i)* /vt/ **1** to give. *rabb-i-na yiɛṭii-k il-ɛafya* God give you strength. *ʔallaah yiɛṭii-k* may God give to you (said in dismissing a beggar). ‖*yiɛṭi fabah* (or *malaamiḥ) li-* he looks like, as in *yiɛṭi fabah li-ʔabuu* he looks like his father. *-ɛaṭa xabar (li-)* to notify. *- ʔil-ʔaxd[i] wil-ɛaṭa* (1) give and take. (2) exchange (of conversation). (3) trade, commerce. *-farṭ il-ʔaxd il-ɛaṭa [prov]* receiving is conditional upon giving. **2** to transmit (a telegram). *bi-yiɛṭi t-tilivraaf bit-tiribirintir* he transmits the telegram by teleprinter. - vn *ɛaṭa*; ava *ɛaaṭi*; pva *maɛṭi*.
عطاء ɛaṭa[2] /n pl *ɛaṭaʔaat*/ tender. *ʔif-firka ʔiddit ɛaṭa* the company submitted a tender. *rasa ɛalee l-ɛaṭa* he was awarded the tender.
عاطي ɛaaṭi /n/ Giver (epithet of God).
عطيّة ɛaṭiyya /n pl *-aat*/ gift.
اتعاطى ʔitɛaaṭa /vt/ to administer to oneself, take (addictive drugs, alcohol, etc.). *baṭṭal il-bitaaɛ illi b-titɛaṭaa da* give up that miserable addiction of yours! - ava/pva *mitɛaaṭi*.
أعطى ʔaɛṭa /vt/ to give. - vn *ʔiɛṭa, ʔiɛṭaaʔ*; ava *muɛṭi*.
معطي *muɛṭi* /n/ Giver (epithet of God).
استعطى ʔistaɛṭa[↓] = *ʔitɛaaṭa*.

ع ظ see و ع ظ : *ɛiẓa*

ع ظ م[1]

عظما ɛaẓaman: *qasaman ɛaẓaman* ≈ by my (greatest) oath! (said when swearing to do something against the will of others).
عظمة ɛaẓama /n/ splendour, grandeur, majesty. *ɛaẓamit il-ḥaḍaara l-maṣriyya* the splendour of Egyptian culture. *lelit-na ḥa-tkuun ʔin shaaʔ allaah ʔaaxir ɛaẓama* we're going to have a really splendid night, God willing. ‖*ʔeeh il-ɛaẓama di* ≈ what a splendid thing! - *ʔil-ɛaẓama li-llaah (waḥd-u)* ≈ don't put on airs! - /adjectivally/ *ḥaaga ɛaẓama* a splendid thing.
عظمى ɛuẓma /fem el/ greatest. ‖*ʔil-ḥarb-il-ɛuẓma* the First World War. - *ʔid-daynuuna l-ɛuẓma* the Last Judgement. - *ʔil-qiima l-ɛuẓma [math]* maximum value.
أعظم ʔaɛẓam /el/ greater/greatest etc. *ʔil-ḥubb[i] ʔaɛẓam ɛaaṭifa fil-wuguud* love is the greatest emotion in existence.
عظيم ɛaẓiim /adj pl *ɛuẓama, ɛiẓaam, ɛuẓaam*/ great, mighty, magnificent. *(da) ɛaẓiim* (that's) great! (that's) marvellous! *w-allaahi l-ɛaẓiim* (by) Almighty God! ‖*salaam ɛaẓiim [mil]* salute to a senior officer.
عظايم ɛaẓaayim /pl n/ disasters, catastrophes. *yaama staḥmilna ɛaẓaayim il-ʔumuur* how many disasters we have borne!
عظّم ɛaẓẓam **1** /vt/ to make great, attribute greatness to, be deferential to. *da qaaɛid yiɛaẓẓam-ni miṣ-ṣubḥ* the guy has been bowing and scraping to me all morning. ‖*ɛaẓẓam allaahu ʔagr-u-kum* God make great your recompense! (a formula of condolence to the bereaved). *fahr[i] ramaḍaan il-muɛaẓẓam* the glorious month of Ramadan (conventional form of reference to the fasting month). **2** /vt and vi/ to salute. *laazim tiɛaẓẓam (l)iẓ-ẓaabiṭ* you must salute officers. - vn *taɛẓiim*; ava/pva *miɛaẓẓam, muɛaẓẓam*.
تعظيم taɛẓiim /n pl *-aat*/ salute.
معظّم *miɛaẓẓam* or *muɛaẓẓam* /adj/ magnifying. *naḍḍaara mɛaẓẓama* (1) binoculars. (2) telescope. (3) magnifying glass.
اتعظّم ʔitɛaẓẓam /vi/ passive of *ɛaẓẓam*. - iva *mitɛaẓẓam*.
معظم *muɛẓam* /n, in constr state/ most of, the majority of. *muɛẓam maḥaṭṭaat il-ʔutubiis fil-hawa ṭ-ṭalq* most bus stops are in the open.
استعظم ʔistaɛẓam **1** /vt/ to consider (too) great. *mistaɛẓam il-ɛamaliyya* he thinks the operation too big. **2** /vi/ to behave proudly. *ʔinta mistaɛẓam ɛala ʔeeh* why are you behaving in this stand-offish way? - vn *ʔistiɛẓaam*; ava/pva *mistaɛẓam*.

ع ظ م[2] see ع ض م

ع ف ا ر م

عفارم ɛafaarim <T *aferim* from P> /interj/ well done! bravo! *ɛafaarim ɛaleek* good for you!

ع ف ر

عفر ɛafr /n/ dust. *ɛoor-i miṭḥaaf min ɛafr is-sikka* my throat is clogged with the dust of the road.
عفرة ɛafara /n/ cloud of dust.
عفار ɛufaar /n/ dust.
عفارة ɛufaara /n/ dust.
عفير ɛafiir /n/ sowing by scattering over dry ground.
عفّر ɛaffar /vt/ **1** to make dusty. **2** to spray with (insecticidal) powder. *ɛaffaru l-beet ɛafaan iṣ-ṣaraṣiir* they sprayed the house against the cockroaches. — /vi/ **3** to raise dust. *ʔil-hawa yṣaffar wi-yɛaffar* the wind whistles

and raises the dust. *ʕik-kannaas ɛaffar ɛaleena* the sweeper got dust over us. **4** *[slang]* to smoke. *bi-yɛaffar ṭuul in-nahaar* he smokes all day long. - vn *taɛfiir*; ava/pva *miɛaffar*.

معفّراتي *miɛaffaraati* /n pl *-yya*/ one who sprays insecticidal powder.

اتعفّر *ʔitɛaffar* /vi/ **1** to be made or become dusty. **2** to be sprayed with (insecticidal) powder. - ava/iva *mitɛaffar*.

عافر *ɛaafir* /vi/ to struggle, strive. *baqaa-li saaɛa b-aɛaafir maɛa n-noom* I've been struggling to get to sleep for an hour. ‖*raagil miɛaafir* (1) an industrious man, an eager beaver. (2) a finicky man. - vn *miɛafra*; ava *miɛaafir*.

اتعافر *ʔitɛaafir* /vi/ (impersonal) passive of *ɛaafir*. *da ʕahbal - ma-yitɛafir-ʃ maɛaa* he's stupid - it's no good trying (to argue) with him. - iva *mitɛaafir*.

ع ف ر ت

عفريت *ɛafriit* /n pl *ɛafariit*/ demon or ghost (of either sex). ‖*walad ɛafriit* (1) a naughty child. (2) a cunning lad. - *rakb-u* (or *ɛalee*) *ɛafriit* (1) he's possessed by a demon. (2) he's in a bad humour; he's likely to blow up if provoked. - *ɛafriit in-niswaan* child's toy whistle or the like which extends when blown. - *ɛafriit il-ɛilba* jack-in-the-box. - *ɛafariit il-leel [obsol]* street-lamp lighters. - *ṭallaɛu l-ɛafariit fi-ɛeen-i* they gave me a really hard time. - *ʕilli yxaaf min il-ɛafriit yiṭlaɛ-lu [prov]* (he who fears a demon, will have a demon appear to him) ≈ too much fear of something may cause it to occur. - *ɛala kaff*ª *ɛafriit* ≈ in a precarious situation. - *budrit il-ɛafriit* itching powder. - *ɛafriit yiṭallaɛ ɛafriit* ≈ it takes a thief to catch a thief. - *ɛafriit nafriit* a very crafty person. - *raaḥ wi-rigiɛ zayy il-ɛafriit* he went there and back in no time. - *ʕil-filuus fiiha ɛafriit [prov]* ≈ money slips through one's fingers.

عفريتة *ɛafriita* /n pl *ɛafariit, ɛafritaat*/ **1** demon or ghost (of either sex). **2** workman's overalls, boiler suit. **3** (car) jack. **4** negative (of a film). **5** wooden cone-like device for measuring and adjusting the size of bracelets and rings. **6** *quṭn il-ɛafriita* cotton waste.

عفاريتي *ɛafariiti* /adj/ devilish.

عفرت *ɛafrat* /vt/ **1** to cause to behave wilfully and mischievously, turn (e.g., a child) into a little demon. *ʕawlaad ig-giraan ɛafratuu xaaliṣ* the neighbours' children have turned him into a real little demon. **2** to drive crazy (with anger, worry, frustration etc.). *ʕeeh illi ɛafrat-ak kida* what's made you so angry? *ginn*ⁱ *lamma yɛafrat-ak [abus]* may demons possess you! - vn *ɛafrata*; ava/pva *miɛafrat*.

اتعفرت *ʔitɛafrat* /vi/ passive of *ɛafrat*. - iva *mitɛafrat*.

ع ف ر م see ع ف أ ر م : *ɛafaarim*

ع ف ش

عفش *ɛaff* /coll n/ **1a** furnishings, household chattels. *faqqa bil-ɛaff* a furnished flat (for sale, rather than for rent). **1b** luggage, baggage. *sibt*ª *ɛaff-i fil-ʕamanaat* I left my luggage at the left-luggage office. **2** weeds, debris and stubble from harvested crops. ‖*ɛaff*ⁱ *naff* useless or worthless things. **3** offal.

عفشة *ɛaffa* **1** /coll n/ **1a** small bits of weed and debris from harvested crops, chaff, chips, motes. *xud ir-ruzzⁱ da naqqi minnu l-ɛaffa* take this rice and clean the chaff from it. **1b** offal. **2** /n pl *-aat*/ small bit of weed or crop debris, speck of chaff, chip, mote. *fii ɛaffa daxalit fi-ɛeen-i* there's a speck in my eye. **3** /no pl/ *[euphem]* bathroom, lavatory. *faqqa b-ɛaffit-ha* a flat with a bathroom. *ɛaffit mayya* lavatory. **4** *[auto]* steering gear components including track rod, drop arm, control arm, and swivel bearing. *ʕirfaɛ il-ɛarabiyya w-rabbaṭ il-ɛaffa* hoist the car and tighten the steering linkages.

عفشاية *ɛaffaaya* = *ɛaffa* 2.

عفش *ɛifiʃ* /adj */ untidy, messy.

عفشة *ɛafaʃa* /n/ untidiness, messiness.

عفاشة *ɛafaaʃa* /n/ weeds, debris and stubble from harvested crops. ‖*ɛafaaʃa min in-naas* good-for-nothing people.

عفّش *ɛaffiʃ* /vi/ **1** to collect useless things. **2** to scatter things about. - vn *taɛfiiʃ*; ava *miɛaffiʃ*.

ع ف ص

عفص *ɛafṣ* /n/ *[bot]* Arbor vitae, gall-nut (from which ink is made).

عفّص *ɛaffaṣ* /vt/ to dirty, soil. - vn *taɛfiiṣ*; ava/pva *miɛaffaṣ*.

اتعفّص *ʔitɛaffaṣ* /vi/ to become or be made dirty. - ava/iva *mitɛaffaṣ*.

ع ف ط

عفّاطة *ɛuffaaṭa* /n/ *[non-Cairene]* six-holed single-reed pipe shorter and thicker than the *naay*. - also *ḥuffaaṭa*.

عفّط *ɛaffaṭ* /vi/ *[non-Cairene]* to play the *ɛuffaaṭa*. - vn *taɛfiiṭ*; ava *miɛaffaṭ*.

اتعفّط *ʔitɛaffaṭ* /vi/ (impersonal) passive of *ɛaffaṭ*. *ʔit-taɛabiin bi-yitɛaffaṭ laha* snakes have pipe music played to them. - iva *mitɛaffaṭ*.

ع ف ف ¹

عفّ *ɛaff*¹ *(i)* /vi/ to abstain, refrain (from s.th. wrong

or indecent). *bi-yɛiff[a] ɛan is-sirqa* he would never steal. - ava *ɛaafif*.
عفّة *ɛiffa* /n/ chastity, modesty, decency.
عفوف *ɛafuuf* = *ɛafiif*.
عفيف *ɛafiif* /adj/ chaste, decent. *ɛandaha nafs[a] ɛafiifa* she's a decent, self-respecting person.
أعفّ *ʔaɛaff* /el/ more/most chaste or decent.
عفّف *ɛaffif* /vt/ to make chaste, make (s.o.) live a decent life. *ʔana lli ʔaqdar ʔaɛaffif-ha* I'm the one who can make a respectable woman of her. - ava/pva *miɛaffif*.
اتعفّف *ʔitɛaffif* /vi/ **1** to be made chaste, be made respectable. **2** = *ɛaff*[1]. - ava/iva *mitɛaffif*.
استعفّ *ʔistaɛaff* = *ɛaff*[1]. - ava *mistiɛiff*.

ع ف ف[2]
عفّ *ɛaff*[2] *(i)* /vi/ to gather (of flies etc.). *ʔid-dibbaan ɛaff[a] ɛala l-ʔakl* the flies settled on the food. - vn *ɛaff, ɛafafaan*; ava *ɛaafif*.

ع ف ق
عفق *ɛafaq (a)* /vt/ to grab hold of. *ɛafaqt-u min raqabt-u* I grabbed him by the neck. - vn *ɛafq, ɛafaqaan*; ava *ɛaafiq*; pva *maɛfuuq*.
عفقة *ɛafqa* /inst n, pl *-aat*/ a grab.
اتعفق *ʔitɛafaq* /vi/ to be grabbed. - iva *mitɛifiq*.
عفّق *ɛaffaq* /vt/ to grab (a number of things or a number of times). *ʔil-buliis ɛaffaq-hum kull-u-hum* the police caught them all. - vn *taɛfiiq*; ava/pva *miɛaffaq*.
تعفيقة *taɛfiiqa* /inst n, pl *-aat*/ a grab.
اتعفّق *ʔitɛaffaq* /vi/ passive of *ɛaffaq*. - iva *mitɛaffaq*.

ع ف ل ص
عفلص *ɛaflaṣ* /vi/ to struggle. - vn *ɛaflaṣa*; ava *miɛaflaṣ*.
اتعفلص *ʔitɛaflaṣ* = *ɛaflaṣ*. - ava *mitɛaflaṣ*.

ع ف ن
عفَن *ɛafan* /n/ **1** decay, rottenness. **2** rot, mould.
عفِن *ɛifin* /adj/ decayed, rotten, putrid, septic.
عفان *ɛafaan* /n/ mould, mildew.
عفانة *ɛafaana* /n/ rottenness. *fii riiḥit ɛafaana fil-ʔooḍa* there is a smell of decay in the room.
عفونة *ɛufuuna* /n/ rottenness, putridity. ‖*ɛandu ɛufuuna f-baṭn-u* he has an upset stomach producing foul gases.
عفّن *ɛaffin* **1** /vt/ to rot, cause to decay or go mouldy. *ʔil-ḥarr[a] ɛaffin il-ɛeef* the heat made the bread go mouldy. **2** /vi/ **2a** to rot, go putrid. **2b** to become septic. - vn *taɛfiin*; ava *miɛaffin*.
اتعفّن *ʔitɛaffin* /vi/ to become or be made rotten or putrid. - vn *taɛaffun*; ava/iva *mitɛaffin*.

ع ف و see ع ف ى : *ɛafw, ɛafwan*

ع ف و ن see also ع ف ى
عفونة *ɛafwana* /n/ strength, force, violence.
اتعفون *ʔitɛafwin* /vi/ **1** to grow strong, become vigorous. **2** to act the tough guy. - ava *mitɛafwin*.

ع ف ى
عفى *ɛafa*[1] *(i)* **1** /vt/ to exempt, spare. *ʔiɛfii-ni ya beeh* let me off, sir! allow me not to do what you want. **2** /vi/ to grant exemption or forgiveness. *tawfiiq saamiḥ ɛuraabi w-ɛafa ɛannu* Tawfiq forgave Urabi and spared him. *rabb-i-na yiɛfi ɛannak* may God grant you forgiveness. - vn *ɛafw*; ava *ɛaafi*; pva *maɛfi*.
عفو *ɛafw* /n/ pardon. *ya rabb[a] ɛafw-ak* O Lord forgive me. *ɛafw[a] ɛaamm* amnesty. ‖ *ʔil-ɛafw* (or *ɛafwan*) disclamatory exclamation to one who thanks one, compliments one, or makes an insinuation against one, as in *fukran*. - *ʔil-ɛafw* 'Thank you.' 'Not at all, you're welcome.', *zar-na n-nabi n-nahar-da*. - *ʔil-ɛafw* 'We're most honoured by your visit.' 'You're too kind.' *ʔinti fakra nafs-ik ʔaḥsan minni walla ʔeeh*. - *ʔil-ɛafw[i] ya sitt[i] haanim* - *ʔil-ɛeen ma-tiɛlaa-ʃ ɛan il-ḥaagib* 'You think yourself better than me, or what?' 'No, no, Ma'am, I'd never forget my place!'
¶ *ɛafwan* = *ʔil-ɛafw*. see further under ع ف و ن
عافى *ɛaafi* **1**↓ /adj */ strong, vigorous, healthy. **2** /n/: *ya faafi ya ɛaafi* O Healer and Giver of strength (addressed to God).
عافية *ɛafya* /n/ good health, vigour. *ma-fhuu-ʃ ɛafya* he has no strength left. ‖ *bi-ṣiḥḥa w-ɛafya* ≈ may it give you health and strength (said to one eating or drinking). *-kaan bi-ɛafya* he was unwell. *-xallii-ku b-ɛafya* or *ʔuqɛudu bi(l)-ɛafya [women in trad soc]* ≈ take care (said in farewell).
¶ *bil-ɛafya* /adv/ (1) by force. *gawwizuu-ha bil-ɛafya* they forced her to marry. (2) only just, barely. *ʔil-ɛarabiyya maʃya bil-ɛafya* the car can barely go. *ʔil-ḥarr[i] bi-yxalli l-waaḥid yiʃtaɣal bil-ɛafya* the heat leaves one barely able to work. *ʔana ɛaayiʃ bil-ɛafya* I can only just get by.
عواف *ɛawaaf* or *ɛawaafi* or *ʔil-ɛawaafi* a greeting used by and to women in traditional society. ‖*noom il-ɛawaafi* sleep soundly! - *ḍarab ɛaleeha ɛawaafi* he took it and never mentioned it again.
عفا *ɛafa*[2] /n/ health, strength, vigour. *ʔid-dafa ɛafa*

[prov] ≈ keeping warm keeps you well.
عفى ʕafi, ʕafiy /adj */ strong, vigorous, robust, healthy. *diḥka ʕafiyya* a hearty laugh.
أعفى ʔaʕfa[1] /el/ more/most strong, vigorous etc.
اتعفى ʔitʕafa /vi/ **1** to be exempted. *ʔitʕafa mil-xidma fig-geeʃ* he was exempted from military service. **2** (impersonal) passive of *ʕafa[1]* 2. *ʔil-ʔaxṭaaʔ iṣ-ṣuvayyara laazim yitʕifi ʕanha* the small mistakes should be forgiven. - ava/iva *mitʕifi*.
عافى ʕaafa /vt/ **1** to give strength or well-being to (of God). *ʔallaah yiʕaafi badan-ak* ≈ may God give you strength! *ʔallaah yiʕafii-k* response to *ʕawaaf* (q.v.). *ʕafaa-kum allaah* response to *bi-ṣiḥḥa w-ʕafya* (q.v.). **2** to exempt, spare. *ḥa-yʕafuu-k mig-geeʃ ʕaʃaan il-walda* they will exempt you from military service on account of your mother. - vn *miʕafiyya, muʕafaah*; ava/pva *miʕaafi*; pva *muʕaafa*.
معافاة *muʕafaah* /n/ exemption, dispensation.
اتعافى ʔitʕaafa /vi/ **1** to grow strong, vigorous, healthy or powerful. **2** to be exempted. - ava/iva *mitʕaafi*.
أعفى ʔaʕfa[2]↑ = *ʕafa*. - vn *ʔiʕfa, ʔiʕfaaʔ*; ava *miʕfi, muʕfi*; pva *muʕfa*.
إعفاء ʔiʕfa, ʔiʕfaaʔ↑ /n pl ʔiʕfaʔaat/ exemption. *ʔiʕfaaʔ ḍariibi* tax exemption.
استعفى ʔistaʕfa↓ /vi/ to resign. *ʕaddimt[i] ṭalab istiʕfa* I submitted my resignation. - vn *ʔistiʕfa*; ava *mistaʕfi*.

ع ق ب
عقب ʕaʕb /n pl ʕuʕúba, ʕuʕbaan/: *ʕaʕb il-baab* the bottom of the door.
عقب ʕuʕb **1** /prep/ after. *taʕaala ʕuʕb iz-ziyaara* come after visiting hours. **2** /n pl *ʕiʕaab, ʔaʕʕaab*/ end, tail-end. *ʕuʕb[i] sgaara* cigarette butt.
عقوبة ʕuʕuuba /n pl *-aat*/ punishment. *ʕuʕuubit il-ʕatl[i] hiyya l-ʔiʕdaam* the penalty for murder is death. *ʕanuun il-ʕuʕubaat* the penal code.
عاقبة ʕaaʕiba↑, ʕaʕba /n pl *ʕawaaʕib, ʕawaaʕib*/ outcome. *rabb-i-na ygiib il-ʕawaaʕib saliima* may God make things turn out right!
عقّب ʕaʕʕab /vt/ to pick through the seeds of, sift (clover). - vn *taʕʕiib*; ava/pva *miʕaʕʕab*.
¶ *ʕaʕʕab* (or *ʕaʕʕaab↑*) *ʕala* to comment upon.
عاقب ʕaaʕib↑, ʕaaʕib↑ /vt/ to punish. *yagib muʕaʕbit il-masʔuul* the one responsible must be punished. - vn *muʕaʕba, muʕaaʕaba, ʕiʕaab*; ava *miʕaaʕib, muʕaaʕib*.
عقاب ʕiʕaab /n/ penalty, punishment.

ع ق ب ا ل
عقبال ʕuʕbaal /interj/ may it be the same (for) ...! (used in formulae of (usually) good wishes or response to congratulations on happy occasions). *ʕuʕbaal-ak* may you be similarly fortunate (or unfortunate)! *ʕuʕbaal ʕandukum gamiiʕan* may you all be so fortunate! *ʕuʕbaal wilaad-ak* may your children be as lucky! *ʕuʕbaal yoom-ak* may you have such a (happy) day (to celebrate)! *ʕuʕbaal ʔamalt-ak* may you gain what you hope for too! *ʕuʕbaal-ak lamma tisʕaṭ ʔinta kamaan* just wait till you fail too! ‖ *ʕuʕbaal farbaat il-faraḥ* may we drink sherbet at your wedding party! (to one's host, when drinking sherbet). - *ʕuʕbaal miit sana* (may it be the same for a hundred years) ≈ many happy returns!
¶ *ʕuʕbaal ma* /conj/ (1) until. *ʔistanna ʕuʕbaal m-agiib il-fluus* wait till I get the money. (2) by the time that. *ʕuʕbaal ma yiwṣal ig-gawaab ḥa-ykuun saafir* by the time the letter arrives he will have already left. (cf. *ʕa-baal ma* under ² ب ل ى).

ع ق د
عقد ʕaʕad *(i, u)* /vt/ **1** to knot, tie a knot in. **2** to form, produce. *baʕd[i] ʃwayya nawwaar il-quṭn[i] yiʕʕid looz ʔaxḍar* after a while, cotton blossoms form green bolls. **3** *[cook]* to thicken by boiling. *sukkar maʕʕuud* sugar boiled down with lemon juice and water to produce (1) a syrup used in cooking. (2) a depilatory of a waxy consistency. **4**↑ (also *ʕaqad*) to convene (e.g., a meeting). - /the literary passive form occurs/ *maglis if-faʕb[i] b-yuʕʕad li-munaqʃit qararaat il-ḥukuuma* the People's Assembly is convened to discuss the decisions of the government. — /vi/ **5** to thicken through being boiled. *xalli f-ʃurba tiʕʕid ʃiwayya* let the soup thicken a little. - vn *ʕaʕd, ʕaʕadaan*; ava *ʕaaʕid*; pva *maʕʕuud*.
¶ *ʕaʕad qaraan↑ (yiʕʕid qaraan)* to sign the marriage contract (of the groom). - *ʕaʕad ʕala (yiʕʕid ʕala)* to sign a contract of marriage with (a woman).
عقد ʕaʕd /n pl *ʕuʕuud, ʕuʕúda↓*/ **1** contract. **2** *[arch]* arch.
عقدة ʕaʕda /n pl *-aat, ʕuʕad*/ **1** sheaf, bundle. *ʕaʕdit ḥaṭab quṭn* a bundle of cotton stalks. **2** *[arch]* arch.
عقد ʕuʕd /n pl *ʕuʕuud, ʕiʕaad*/ necklace.
عقدة ʕuʕda /n pl *-aat*/ **1** knot (tied in s.th.). ‖ *kull[a] ʕuʕda w-liiha ḥallaal [prov]* every problem has someone who can solve it. **2** problem, difficulty. ‖ *raagil ʕuʕda* a man who can solve any problem. **3** knot (in wood). ‖ *ʔil-ʕuʕda tiṛlib in-naggaar [prov]* (the carpenter can't deal with a knot in the wood) there are some problems which no one can solve. - *ḥaṭṭ il-ʕuʕda fil-minʃaar [prov]* to object out of contrariness. **4** *[naut]* knot, nautical mile. *surʕaat il-markib bi-titʕaas bil-*

ɛuqda the boat's speeds are measured in knots. **5** knuckle. **6** complex, hang-up.

عقد ɛiqd /n/ *[cook]* amount of liquid (usually water with salt) appropriate to a particular dish. *ʃil-ɛiqdi btaaɛ il-firaax kubbayteen mayya l-kulli farxa* the amount of liquid to be added in the cooking of chickens is two cups of water per chicken. - also *qiɛd*.

عقيد ɛaqiid, ɛaqiid /n pl ɛuqadaaʃ/ *[mil]* colonel. *ɛaqiid ṭayyaar* group-captain.

عقيدة ɛaqiida↑ /n pl ɛaqaaʃid/ **1** belief, conviction. *ɛan ɛaqiida* by conviction, on principle. **2** creed, dogma.

عقّاد ɛaqqaad /n */ maker and seller of trimmings for clothes, maker and seller of piping, braid etc.

عقّاد ɛuqqaad /n/ knotted thread worn to ward off illness. ‖ *ʃiddii-ni ɛuqqaad naafiɛ* give me a practical solution.

اتعقد ʃitɛaqad /vi/ passive of *ɛaqad*. - iva *mitɛiqid*.

انعقد ʃinɛaqad = ʃitɛaqad. - vn *ʃinɛiqaad*; iva *minɛiqid*.

عقّد ɛaqqad /vt/ **1** to tie in knots, tangle. **2** to make difficult, complicate. *fiḍil yiɛaqqad fi-ḥayat-na l-ḥaddi ma kulli waaḥid marart-u ṭaqqit* he went on making our life difficult till everyone was at the end of his tether. *mawḍuuɛ miɛaqqad* a complex subject. **3** to give a complex to. - vn *taɛqiid*; ava/pva *miɛaqqad*.

اتعقّد ʃitɛaqqad /vi/ **1** to be or become tied in knots or tangled. **2** to be made or become difficult or complicated. **3** to be given a complex, develop a complex. *ʃana kunti mitɛaqqada min il-qaṣr ɛafaan il-ɛayyil nizil mayyit* I had a complex about Kasr el-Aini (hospital) because the child was born dead. - ava/iva *mitɛaqqad*.

اتعاقد ʃitɛaaqid /vi/ to make a contract (with o.a.). *titɛaaqid il-wikalaat maɛa t-tilivizyoon* the agencies enter into a contract with the television (corporation). - vn *taɛaaqud*; ava *mitɛaaqid*.

تعاقد taɛaaqud, taɛaaqud↑ /n pl -aat/ contract. *fii taɛaaqud been if-firka wir-raakib* a contract exists between the company and the passenger.

اعتقد ʃiɛtaqad /vi/ **1** to believe, have faith (e.g., in God). *ma-b-aɛtiqid-ʃi f-rabb-i-na* I don't believe in God. **2** to believe (in the truth of a statement). *ma-b-aɛtiqid-ʃi fil-ḥikaaya di* I don't believe that story. **3** *yaɛtaqid↑* /imperf only/ to believe, think, consider. *m-aɛtaqid-ʃ* I don't think so. *bi-naɛtaqid ʃinni fii ḥall* we believe there is a solution. - vn *ʃiɛtiqaad, ʃiɛtiqaad*; ava *miɛtiqid*.

اعتقاد ʃiɛtiqaad, ʃiɛtiqaad /n pl -aat, -aat/ belief.

استعقد ʃistaɛqad↓ /vi/ to believe. *kunt astaɛqad fis-siḥr* I used to believe in magic. - also *ʃistaqɛad*. - ava *mistaɛqad*.

¹ ع ق ر

عقار ɛiqaar or ɛaqaar /n pl -aat/ real estate, landed property.

عقارى ɛiqaari or ɛaqaari /adj/ pertaining to real estate or landed property. ‖ *ʃil-bank il-ɛiqaari* a bank that provides loans to those building houses. - *ʃiʃ-ʃahr il-ɛaqaari* see *ʃahr*.

² ع ق ر

عقر ɛaqar *(u)* /vt/ to bite (of a dog). - vn *ɛaqr*; ava *ɛaaqir*; pva *maɛquur*.

عقرة ɛaqra /inst n, pl -aat/ a (dog's) bite.

اتعقر ʃitɛaqar /vi/ to be bitten. - iva *mitɛiqir*.

انعقر ʃinɛaqar = ʃitɛaqar. - iva *minɛiqir*.

³ ع ق ر

عقّر ɛaqqar /vt/ to foul, entangle. *ʃil-muxṭaaf miɛaqqar* the anchor is fouled. - ava/pva *miɛaqqar*.

اتعقّر ʃitɛaqqar /vi/ to be fouled, be entangled. - iva *mitɛaqqar*.

⁴ (ع ق ر)

عقر ɛuqr **1** /coll n/ *[rur]* root(s). **2** /adj invar/ experienced in the ways of the world, hardened and capable.

عقار ɛaqqaar /n pl ɛaqaqiir/ drugs, medicines. ‖ *ɛaqqaar il-halwasa* L.S.D.

ع ق ر ب

عقرب ɛaqrab¹ /vt/ to make difficult, make complex, make baffling. - vn *ɛaqraba*; ava/pva *miɛaqrab*.

معقرب miɛaqrab or miɛaqrab /adj */ not straightforward, difficult to understand, complex and baffling. *raagil miɛaqrab* a complex man, a deep type. *ʃimtiḥaan miɛaqrab* a difficult exam. *ʃik-koora gat-lu mɛaqraba* the ball came to him at a difficult angle.

عقرب ɛaqrab² or ɛaqrab /n/ **1** /pl ɛaqaarib/ = *ɛaqraba*. ‖ *ḥagar il-ɛaqrab* an aphrodisiac, supposedly made from an opium base. **2** hand (of a watch). **3** *ʃil-ɛaqrab [astrol]* Scorpio. **4** bolt inserted through the *balanga* of a plough to hold the ploughshare at the required angle (see Pl.D, 15).

عقربة ɛaqraba or ɛaqraba /n pl ɛaqaarib/ **1** scorpion. *zayy il-ɛaqraba qarṣit-ha wil-qabr* as fatal as a scorpion with its deadly sting. **2** spiteful backbiting person.

اتعقرب ʃitɛaqrab /vi/ passive of *ɛaqrab¹*. - iva *mitɛaqrab*.

ع ق ق
عقيق ʿaqiiq /n/ carnelian.

ع ق ل [1]
عقل ʿaqal *(i)* /vt/ **1** to tether. ‖ *ʃiʿqil-ha wa-tawakkal [prov]* (tie up your beast and trust in God) ≈ God helps those who help themselves. **2** to believe, credit, find credible. ‖ *ʃinta ma-b-tiʿqil-ʃ* are you daft? - vn *ʿaql, ʿaqalaan*; ava *ʿaaqil*; pva *maʿquul*.
عقل ʿiqil *(a)* /vi/ to become sensible or reasonable, learn some sense. *lamma tikbar tiʿqal wi-lamma tiggawwiz tiʿqal ʃaktar* when she grows up, she'll learn some sense, and when she gets married she'll learn more. - vn *ʿaql*; ava *ʿaaqil*.
عقل ʿaql /n pl *ʿuquul*/ mind, reasoning power, sense. *ya-bu ʿaql[i] txiin* you dolt! *gara f-ʿaql-u ʃeeh* what's come over him? *kalaam-ak ʿeen il-ʿaql* what you say is the epitome of good sense. *ʃaṣḥaab il-ʿuquul fi-raaḥa [prov]* the intelligent have no problems. *ʃil-ʿabiiṭ* (or *ʃil-magnuun*) *ma-yiʿgib-uu-ʃ ʏeer ʿaql-u w-law ḥaṭṭuu-lu miit ʿaql[a] ʿala ʿaql-u [prov]* the simpleton (or the madman) prefers his foolishness to the wisdom of a hundred others. ‖ *ya ʿaql-i* ≈ my only care! (a term of endearment). - *ʿaql[i] ʃiliktirooni* a computer. - *bi-ʿaql* sensibly, in an intelligent way, as in *bi-yaakul bi-ʿaql* he eats sensibly. - *ḥaaga bil-ʿaql* something susceptible to logical explanation, as in *taʿaala fahhim-na - ma hiyya ḥaaga bil-ʿaql* come and explain to me - after all, there must be some logic behind it. - *xad-(u) (taawiʿ-(u)*, etc.) *ʿala (ʿadd[a]) ʿaql-(u)* to humour, go along with, bear with, as in *ʿult[i] m-azaʿʿal-haa-ʃ w-axud-ha ʿala ʿaql-a-ha* I thought, rather than upset her, I'll let her do it her way. - *ʿaql-(u) ʿal-l(u)* to say to oneself, think, as in *ʿaql-i ʿal-li ʿuum ya waad ʃiftaḥ-lak ḥittit dukkaan ṣuɣayyar* I said to myself, get a move on, lad, and open yourself a small shop, *ʿaql-i ʿal-li ʃitgawwiz ʿafaan yibʿaa-lak beet* I thought, why don't I get married and set up house? - *ʿaal f-ʿaql[i] baal-(u)* to say to oneself privately, think to oneself secretly, as in *ʿult[i] f-ʿaql[i] baal-i miʃ ḥ-argaʿ lid-duktuur da taani* I said to myself, I'm not going back to that doctor! - *ʔiliʿ fi-ʿaql-(u) ʃinn* to be seized by the idea that, be taken all of a sudden by the idea that, as in *ʃabuu ṭaliʿ fi-ʿaql-u ʃinnu yitgawwiz bint[i] ṣɣayyara baʿd[i] ma baʿa ʃawlaad-u riggaala* his father all of a sudden has become taken with the idea that he should marry a young girl, now that his sons are men. - *ʿamal ʿaql-(u) min* (or *bi-)ʿaql-* to lower oneself to the level of, as in *laakin tiʿuuli ʃeeh baʿa lir-raagil illi ʿaamil ʿaql-u min ʿaʿl il-waad wi-ʃaxiṭ ʃii* but what can one say to the man who lowers himself to the same level as the kid and bawls at him? - *ʿaql-(u) ṭaar* to lose one's head. - *min ʿaql-(u)* on one's own initiative, off one's own bat, as in *ma-tiʿmil-f[i] ḥaaga min ʿaql-ak* don't do anything on your own initiative! - *huwwa ʿaql-i daftar* ≈ how am I supposed to remember everything! - *ʃakal ʿaql-i* he had me completely fooled. - *ʃil-ʿaql is-saliim fig-gism is-saliim [prov]* a sound mind (is found only) in a sound body. - *ʿaql-u f-raas-u* he is level-headed. - *ʿaql-ak fir-raas-ak tiʿraf xalaṣ-ak [prov]* ≈ do as you please, but bear the consequences. - *ʃiddii-ni ʿaql-ak* ≈ just imagine! picture it for yourself! - *ʿaql-u gazma* he's a thickhead. - *ʃil-ʿaql il-baaṭin* the subconscious. - *mayyil ʿaql(-u)* to affect the judgement of (s.o.).
عقلي ʿaqli, ʿaqli /adj/ mental, rational, intellectual. *ʃamraaḍ ʿaqliyya* mental illnesses. *ʃis-sinn il-ʿaqli* mental age.
¶ *ʿaqliyyan* /adv/ mentally, rationally, intellectually. *mutaxallif ʿaqliyyan* mentally retarded.
عقليّة ʿaqliyya, ʿaqliyya /n pl -aat/ mentality.
عاقل ʿaaqil, ʿaaqil /adj * and pl *ʿuqala, ʿuqalaaʃ*/ sensible, reasonable, sane. *ʃis-sitt il-ʿaqla hiyya lli tiqdar tidiir fuʃuun bet-ha* it takes a woman with sense to run a household. *xud il-magnuuna bint il-ʿaqla wala taaxud il-ʿaqla bint il-magnuuna [prov]* better marry the crazy daughter of a sane woman than the sane daughter of a crazy woman. *ʿaduwwun ʿaaqil xayrun min ṣadiiqin gaahil [prov]* a sensible enemy is preferable to an ignorant friend.
معقول maʿquul /adj */ reasonable, logical, comprehensible. *kalaam-ak maʿquul* what you say makes sense. *miʃ maʿquul* incredible! it can't be! it doesn't make sense!
معقوليّة *maʿquliyya* /n/ plausibility.

عقلة ʿuqla /n pl *ʿuqaʃ*/ **1** knuckle. **2** knob, node (e.g., of a reed). ‖ *huwwa zayy il-ʿuqla fiz-zoor* (he's like a lump that sticks in your throat) he's extremely unpleasant. **3a** vertebra. **3b** segment of finger between two knuckles, knuckle-bone. ‖ *ʿuṣayyar zayy il-ʿuqla* short as a knuckle-bone. **4a** segment (of reed or the like) between two nodes. ‖ *liʿbit il-ʿuqla* tipcat. **4b** short flute made of one section of a reed. **5** *[hort]* cutting. *ʿuqlit ward[i] baladi* a rose cutting. **6** *[gym]* **6a** trapeze. **6b** horizontal bar.

أعقل ʔaʿqal /el/ more/most reasonable.
عقال ʿiqaal, ʿuqaal /n pl -aat/ **1** stiff cord ring worn to hold the *kufiyya* in place on the head. **2** foot-rope, hobble.

عقّل ʕaqqal 1 /vt/ to teach sense to, make reasonable. 2 /vi/ to become knotty. - vn *taʕqiil*; ava/pva *miʕaqqal*.
معقّل *miʕaqqal* /adj/ gnarled, knotty.
اتعقّل ʔitʕaqqal /vi/ 1 to be taught sense, be made reasonable. 2 to behave with reason. 3 to become knotty or gnarled. - ava/iva *mitʕaqqal*.
اعتقل ʔiʕtaqal, ʔiʕtaqal /vt/ to arrest and detain for a political offence and without due process of law. - vn *ʔiʕtiqaal*; ava *miʕtiqil*; pva *muqtaqal*.
معتقل *muʕtaqal, muʕtaqal* /n pl *-aat*/ prison camp (especially for political prisoners), concentration camp.

ع ق ل ²
عاقول، عقول ʕaquul /n/ *[bot]* camel thorn.

ع ق م
عقم ʕuqm /n/ barrenness, sterility.
عقّم ʕaqqam↑ /vi/ to sterilize. - vn *taʕqiim*; pva *muʕaqqam*.
اتعقّم ʔitʕaqqam↑ /vi/ to be sterilized. - iva *mitʕaqqam*.

ع ك ر
عكر ʕikir /adj */ turbid, muddy. *mayya ʕikra* turbid water. ‖*wiʃʃ-u ʕikir* he has an unpleasant face.
عكارة ʕukaara, ʕakaara, ʕikaara /n/ dregs, sediment, lees.
عكّر ʕakkar or ʕakkar /vt/ 1 to roil, render turbid. *gaww mʕakkar* overcast weather. 2 to disturb, trouble. *ʕakkar mazaag-i* (or *damm-i*) he put me in a bad mood. - vn *taʕkiir*; ava/pva *miʕakkar, miʕakkar*.
معكّراتي *miʕakkaraati* /n pl *-yya*/ one who habitually spoils people's happiness, spoilsport, wet blanket.
اتعكّر ʔitʕakkar or ʔitʕakkar /vi/ 1 to be made turbid. *ʔil-baḥr ma-yitʕakkar-ʃ min tirʕa [prov]* (the sea is not stirred up by (water from) a canal) a drop in the ocean has no effect. 2 to be disturbed, be agitated. - iva *mitʕakkar*.
استعكر ʔistaʕkar /vt/ 1 to consider (too) turbid. 2 to select for turbidity. - vn *ʔistiʕkaar*; ava *mistaʕkar*.

ع ك ر ت
عكرت ʕakrat /vi/ to rummage, go ransacking. *ʔinta bi-tʕakrat ʕala ʔeeh ʕandak* what are you rummaging in there for? - vn *ʕakrata*; ava *miʕakrat*.
عكروت ʕakruut /n pl *ʕakariit, ʕakarta*/ scoundrel, heel.

ع ك ز
عكّاز ʕukkaaz /n pl *ʕakakiiz*/ 1 crutch. 2 bishop's staff, crosier.
اتعكّز ʔitʕakkiz /vi/ to lean, support oneself. - ava *mitʕakkiz*.

ع ك س
عكس ʕakas¹ *(i)* /vt/ 1 to reverse, invert. ‖*ʕakas il-ʃaaya* to do the opposite of what should be done. 2 to reflect, produce a reflection of. - vn *ʕakasaan, ʕaks*; ava *ʕaakis*; pva *maʕkuus*.
عكس ʕaks /n/ 1 opposite, reverse. *ʔis-sammaaʕa ʕaks il-mikrufoon* the receiver is the opposite of the microphone. ‖*bil-ʕaks* on the contrary. - *maafi fid-dinya bil-ʕaks* ≈ flouting convention. - *ʔil-ʕaks¹ bil-ʕaks* vice versa. 2 /pl *ʕukusaat*/ adversity, reverse in fortune thought to be occasioned by malevolent spirits or magic. *ʃallaah yimnaʕ ʕannu l-ʕaks* God keep adversity from him! *ʃuft¹ ṭariiq-u fil-fingaan kaan kull-u ʕaks* I saw his future in the cup, and it was nothing but adversity.
عكسي ʕaksi /adj */ 1 opposite, contrary. *ʔil-ittigaah il-ʕaksi* the opposite direction. *liʕba ʕaksiyya* a play against the direction of the game, a side or back pass. 2 inverse. *tanaasub ʕaksi* inverse proportion.
عكس ʕakas² /n/ = *ʕaks* 2.
اتعكس ʔitʕakas /vi/ 1 to be reflected. 2 to be reversed. - iva *mitʕikis*.
انعكس ʔinʕakas = *ʔitʕakas*. - vn *ʔinʕikaas*; iva *minʕikis*.
عاكس ʕaakis /vt/ 1 to bother, hassle, pester, annoy. *ʕeeb ʔinnak tiʕaakis il-banaat fiʃ-ʃaariʕ* it's shameful of you to bother girls in the street. 2 to thwart, oppose. *durrit-ha dayman miʕaksaa-ha* her co-wife is always standing in her way. — /vi/ 3 to act contrarily, play up. *ʔil-ʃasanseer ʕammaal bi-yʕaakis* the lift keeps playing up. *ʔiz-zaman miʕaakis* everything goes wrong these days! - vn *miʕaksa, muʕaksa*; ava *miʕaakis*.
اتعاكس ʔitʕaakis /vi/ 1 to be bothered, be hassled, be pestered, be annoyed. 2 to be thwarted, be opposed. - iva *mitʕaakis*.

ع ك ش
عكش ʕakaʃ *(u)* /vt/ to grab, take hold of. *ʕakaʃt-u min ʔiid-u* I grabbed him by the hand. - vn *ʕakaʃaan, ʕakʃ*; ava *ʕaakiʃ*; pva *maʕkuuʃ*.
عكش ʕukʃ 1 /coll n/ joints (of an animal), knobs or nodes (of a plant). 2 /adj invar/ stunted, undersized. *baṭṭiixa ʕukʃ* a stunted water-melon.
عكشة ʕukʃa /unit n, pl *-aat*/ a joint (of an animal), knob or node (of a plant).
اتعكش ʔitʕakaʃ /vi/ to be grabbed. - iva *mitʕikiʃ*.

انعكش ʃinɛakaʃ = ʃitɛakaʃ. -iva *minɛikiʃ*.
عكّش ɛakkaʃ /vt/ to grab (a number of things or a number of times). *ʃil-buliiṣ ɛakkaʃ-hum kull-u-hum* the police nabbed them all. -vn *tɑɛkiiʃ*; ava/pva *miɛakkaʃ*.
اتعكّش ʃitɛakkaʃ /vi/ passive of *ɛakkaʃ*. -iva *mitɛakkaʃ*.

ع ك ف
عكف ɛakaf *(i)* /vi/ to devote one's attention. *ɛakafta ɛal-qaḍiyya darast-a-ha* I concentrated on the case (until) I had studied it thoroughly. -vn *ɛakafaan*; ava *ɛaakif*.
اعتكف ʃiɛtakaf /vi/ to retire, seclude oneself, go into seclusion. -vn *ʃiɛtikaaf*; ava *miɛtikif*.

ع ك ك [1]
عكّ ɛakk *(u)* /vt/ **1** to smear. *ɛukk ʃiid-ak bi-fwayyit sabɣit yuud* put a little tincture of iodine on your hand. *ʃiwɛa tɛukk hduum-ak buuya* mind you don't get paint all over your clothes. **2** to mess up, botch up. *ɛakkit il-ʃakl* she made a mess of the food. *ʃeeh il-ɛakk da* what's all this mess! **3** to embroil in a mess, set at odds. *ɛakk in-naas fi-baɛḍ-a-ha* he set the people against one another. -vn *ɛakakaan, ɛakk*; ava *ɛaakik*; pva *maɛkuuk*.
عكّة ɛakka /pl -aat/ instance noun of *ɛakk*.
عكّاك ɛakkaak /n */ **1** botcher, one who makes a mess of what he does. **2** malicious trouble-maker.
اتعكّ ʃitɛakk /vi/ **1** to be smeared. **2** to be messed up, be botched. **3** to be embroiled in a mess, be set at odds. -iva *mitɛakk*.
انعكّ ʃinɛakk = ʃitɛakk. -iva *minɛakk*.

ع ك ك [2]
عكّا، عكاء ɛakka /prop n/ Acre, a town on the Mediterranean coast north of Haifa. ‖*ɛamal zayy ma ykuun fataḥ ɛakka* (he behaved as though he'd conquered Acre) he behaved as though he'd achieved the impossible.

ع ك م
عكم ɛakam *(u)* /vt/ to grab and hold tight, grasp, *ʃis-sitt waldit-i raaḥit ɛakmaa-ni w-baysaa-ni* my mother suddenly hugged and kissed me. -vn *ɛakm, ɛakamaan*; ava *ɛaakim*; pva *maɛkuum*.
اتعكم ʃitɛakam /vi/ to be grabbed and held tight, be grasped. -iva *mitɛikim*.
عكّم ɛakkim /vt/ to cause or enable to grab. -vn *taɛkiim*; ava/pva *miɛakkam*.
اتعكّم ʃitɛakkim /vi/ passive of *ɛakkim*. -iva *mitɛakkim*.

ع ك ن ن
عكنن ɛaknin /vt/ to annoy, upset, aggravate, exasperate. *ʃamma di ɛaknana* how exasperating! *ɛakninu mazaag-i* they ruined my good humour. -vn *ɛaknana*; ava/pva *miɛaknin*.
معكنناتي miɛakninaati /n pl *-yya*/ one who habitually annoys people, pest.
اتعكنن ʃitɛaknin /vi/ to be or become annoyed, upset, aggravated or exasperated. -ava/iva *mitɛaknin*.

ع ك و
عكوة ɛikwa /n pl *-aat*/ cut of meat from the base of the tail.

ع ل ب
علبة ɛilba /n pl *ɛilab*/ container, box, pack, tin. *ɛilbit sagaayir* pack of cigarettes. *ɛilbit sardiin* tin of sardines. *ɛilbit gazma* shoe-box. ‖*ɛilbit saqya [agric]* hollow inner compartment of a water-wheel. -*ɛilbit id-diriksiyoon [auto]* steering column.
علّب ɛallib /vt/ to pack in a container. -vn *taɛlliib*; ava/pva *miɛallib*.
معلّبات *muɛallabaat↑* /pl n/ canned foods.
معلّباتي *miɛallabaati* /n pl *-yya*/ packer.
اتعلّب ʃitɛallib /vi/ to be packed in a container. -iva *mitɛallib*.

ع ل ج
عالج ɛaalig /vt/ **1** to treat medically. *ruḥt il-ɛiyaada taani w-ɛalguu-ni hnaak* I went back to the clinic and they treated me there. *ʃiṭ-ṭabiib il-muɛaalig* the doctor in charge of the case. **2** to tackle, deal with, treat. *ɛaalig il-mawḍuuɛ bi-ḥikma* go about the matter wisely. **3** to process. *bi-yɛalgu l-qumaaʃ bi-mawaadd kimawiyya* they process the cloth with chemicals. -vn *ɛilaag, muɛalga*; ava *miɛaalig, muɛaalig↑*.
علاج ɛilaag /n pl *-aat*/ prescribed treatment. *ʃiddaa-ni ɛilaag ɣaali qawi* he prescribed me very expensive medicine. ‖*ɛilaag gamaaɛi* group therapy. -*ɛilaag ṭabiiɛi* physiotherapy. -*ma-luu-ʃ ɛilaag* (1) it is incurable. (2) it is irremediable.
علاجي ɛilaagi /adj/ therapeutic. ‖*muʃassasa ɛilagiyya* hospital run by a trade union or professional association for the benefit of its members.
معالجة *muɛalga* /n pl *-aat*/ = *ɛilaag*.
اتعالج ʃitɛaalig /vi/ **1** to be treated medically. *b-atɛaalig bi-ʃibar wi-birfaam* I'm being treated with injections and pills. **2** to be tackled, be dealt with, be treated. **3** to be processed. -iva *mitɛaalig*.

ع ل ش ا ن see ع ش ا ن : *ɛalafaan*

ع ل ف

علف *ɛalaf, ɛilif (i)* /vt/ to feed (an animal). *nifiil tibn il-ɣalla ɛafaan niɛlif minnu l-bahaayim* we take the wheat stalks to feed to the livestock. - vn *ɛalf, ɛalafaan*; ava *ɛaalif*; pva *maɛluuf*.

علفة *ɛalfa* /n pl *-aat*/ **1** instance noun of *ɛalf*. **2** (kind of) fodder.

معلوف *maɛluuf* /adj */ fattened for market (e.g., of a calf).

علف *ɛalaf* /n pl *ʕaɛlaaf*/ fodder. ‖ *ɦalaawa ɛalaf* sweetmeat made of sesame seeds and sugar.

علافة *ɛalaafa* /n/ food grains.

علاّف *ɛallaaf* /n * and pl *ɛallaafa*/ **1** seller of fodder, cereals, pulses etc. **2** one skilled at feeding livestock.

اتعلف *ʔitɛalaf* /vi/ to be fed (of animals). - iva *mitɛilif*.

انعلف *ʔinɛalaf* = *ʔitɛalaf*. - iva *minɛilif*.

ع ل ق

علق *ɛiliq (a)* /vi/ to stick, adhere. *ʕif-faɛr il-maqṣuuṣ ɛiliq fi-hduum-i* the shorn hair stuck to my clothes. - vn *ɛalaqaan*; ava *ɛaaliq*.

علقة *ɛalqa* /n pl *-aat, ɛulaq*/ beating, hiding. *ḍarabt-a-ha ɛalqa gamda* I gave her a good thrashing.

علق *ɛilq* /n pl *ɛiluuq*/ *[coarse]* passive homosexual, faggot. *ʕin laqeet il-ɛilqi ma-tilqaa-ʃ il-xaraaba w-ʕin laqeet il-xaraaba ma-tilqaa-ʃ il-ɛilq [prov]* if you find the faggot, you can't find the wasteground (to screw him in), and if you find the wasteground, you can't find the faggot. see further under ع ل ق ن

علقة *ɛilqa* /n pl *ɛiluuq*/ *[coarse]* girl of loose conduct, tart.

علق *ɛalaq* /coll n/ leech(es).

علقة *ɛalaqa* /unit n, pl *-aat*/ a leech. ‖ *zayy il-ɛalaqa* (like a leech) parasitical, clinging.

علاقة *ɛilaaqa, ɛilaaqa* /n pl *-aat*/ relation, relationship. *ɛilaqaat faxṣiyya* personal relations. *ɛilaqaat ɛamma* public relations. *fii ɛilaaqa been taʃxiir il-ʕisɛaaf wiz-zibaala lli marmiyya fiʃ-ʃaariɛ* there's a connection between the ambulance being delayed and the rubbish thrown down in the street.

علوقيّة *ɛiluqiyya, ɛuluqiyya* /n/ debauchery. see further under ع و ل ق

عليق *ɛaliiq* /coll n/ fodder, animal feed. *muut ya ɦmaar ɛala ma ygii-lak il-ɛaliiq [prov]* you'll die (of starvation), you ass, if you wait expecting someone to bring you food (to one whose problem has little hope of solution).

عليقة *ɛaliiqa* /unit n, pl *-aat, ɛalaayiq*/ a portion of fodder.

علاّقة *ɛallaaqa* /n pl *-aat*/ **1** clothes rail (in a wardrobe). **2** peg or hook on which to hang things up. **3** sling (for the arm).

علّيق *ɛulleeq* /coll n/ any of various climbing or creeping plants or brambles. *l-agl il-ward[i] yinsiqi il-ɛulleeq [prov]* for the sake of the roses the weeds get watered.

علّيقة *ɛulleeqa* /n pl *-aat*/ **1** hanging strap (e.g., in a bus). **2** peg or rack on which to hang things. **3** sling (for the arm). **4** any hanging decoration (e.g., pendant on a necklace, mascot in a car). — /unit n/ **5** a climbing or creeping plant or bramble. ‖ *ʕil-ɛulleeqa* or *ɛulleeqit muusa* the Burning Bush.

معلقة *maɛlaqa* /n pl *maɛaaliq*/ **1** spoon. **2** spoonful.

علّق *ɛallaq* /vt/ **1a** to hang, suspend. *yiqlaɛ ḥuduum-u wi-yɛallaq-ha ɛaʃ-ʃammaaɛa* he takes off his clothes and hangs them on the hanger. *ɦa-nɛallaq in-natiiga bukra* we'll put up the result tomorrow. ‖ *kubri mɛallaq* suspension bridge. **1b** to stand up, leave to wait in vain. *farqaɛit il-maɛaad wi-ɛallaqit-ni saɛteen* she broke the appointment and left me waiting two hours. **1c** *[chem]* to suspend (a substance) in a fluid. **2** to harness, hitch. *ʕil-faras lamma tikbar bi-yɛallaq-ha fil-ɛarabiyya* when a mare grows old she is put to pulling a cart. *ʕin kaan ɛandu bhimteen yiɛallaq-hum fil-miɦraat* if he has two beasts he harnesses them to the plough. **3** to pick up (a girl). *nifs-i ʕabqa zayyu w-ʕaɛallaq ʕayyuha waɦda* I wish I were like him and could pick up any girl. **4** to get hold of illicitly, nick, swipe. *ɛallaqu ʕasʔilit il-imtiɦaan* they got hold of the exam questions (ahead of time). *ʕil-xaddaam ɛallaq ir-radyu w-miʃi* the servant swiped the radio and left. — /vi/ **5** to comment, make comments. **6a** to jam, become stuck. *ʕaduus ɛad-dibriyaaj ɛafaan it-tiruus ma-tɦukk[i]-ʃ fi-baɛḍ-a-ha wi-tɛallaq* I press on the clutch so that the gears don't catch on one another and get stuck. *ʕil-ʕibra mɛallaqa* the (record-player) needle is stuck. ‖ *ʕin-nimra mɛallaqa* the number doesn't connect (when dialled). *- ɛallaqt[a] ɛala l-fikra w-miʃ qaadir ʕansaa-ha* I'm completely hooked on the idea and can't forget it. **6b** to catch on, become popular. *bi-yziiɛu l-ʕuɣniya lamma tɛallaq* they broadcast the song till it catches on. - vn *taɛliiq*; ava/pva *miɛallaq*.

¶ *ɛallaq ɛala* to put (s.th.) on to cook. *ɛallaq ɛala l-laɦma* put the meat to cook. *- ɛallaq li-* to feed (livestock).

تعليق *taɛliiq* /n pl *-aat, taɛaliiq*/ **1** comment. **2** commentary. *ʕit-taɛliiq ɛal-maʧ* the commentary on the match.

تعليقة *taʕliiqa* /n pl *-aat*/ **1** hanging strap. **2** hanging flap (e.g., of a tent or awning). **3a** badge worn as an emblem. **3b** pendant. **3c** amulet worn on the person. **4** sling (for the arm). **5** hook or rack used to hang things on.

معلّق *muʕalliq, muʕalliq* /n */ commentator.

معلّق *muʕallaq* /n pl *-aat*/ *[chem]* suspension, fluid in which a substance is suspended.

اتعلّق *ʔitʕallaq* /vi/ **1a** to be hung, be suspended. **1b** to be stood up, be left waiting in vain. **1c** *[chem]* to be suspended in a fluid. **2** to be harnessed, be hitched up. **3** to be picked up (of a girl). **4** to be got hold of illicitly, be nicked, be swiped. **5** to be connected, *ʔin-nafaaṭ illi b-yitʕallaq bif-ʃabaab* activities pertaining to youth. **6** to become emotionally attached (to s.o.), become emotionally dependent (on s.o.). *miʃ laaqi ʕaruusa tirḍa bii ʕalaʃaan mitʕallaq xaaliṣ bi-ʔumm-u* he can't find a girl prepared to marry him because he's so attached to his mother. ‖*mitʕallaq min deel-u* ≈ he's trying to keep up with the Joneses. **7** (impersonal) passive of *ʕallaq* 5. *ʔil-ḥagaat iṣ-ṣuɣayyara di miʃ laazim yitʕallaq ʕaleeha* it's not necessary to pick on these trivial matters. - ava/iva *mitʕallaq*.

متعلّقات *mutaʕallaqaat, mutaʕallaqaat* /pl n/ belongings, possessions.

ع ل ق م

علقم *ʕalqam* /n/ colocynth, bitter-apple. *murr[i] zayy il-ʕalqam* as bitter as colocynth.

ع ل ق ن see also ع ل ق

اتعلقن *ʔitʕalqan* /vi/ to behave effeminately. - vn *ʕalqana*; ava *mitʕalqan*.

ع ل ك

علك *ʕalak (i)* /vi/ to chatter, prattle, babble on. - vn *ʕalk*; ava *ʕaalik*.

ع ل ل [1]

علّ *ʕall (i)* /vt/ **1** to make sick and weary. *ʔit-tadriis fuɣlaana tʕill* teaching is a soul-destroying job. **2** to water for a second time (plants which do not flourish after the first watering). - vn *ʕalalaan*; ava *ʕaalil*; pva *maʕluul*.

علّة *ʕilla* /n pl *ʕilal*/ **1** sickness, weariness. *ʔil-ḥikaaya di rabbit-li ʕilla* I'm sick and tired of this business. **2** reason, excuse. *ʔeeh il-ʕilla f-safar-ak bil-leel* what is the reason for your travelling at night? *kalaam-u da mugarrad ʕilla kida* what he said is just an excuse.

علالة *ʕilaala* /n/ **1** comfort, consolation. **2** remainder, remnant, rest. **3** excuse, pretext. **4** occupation, diversion.

عليل *ʕaliil* /adj pl *ʕulala*/ extremely sick.

اتعل *ʔitʕall* /vi/ to become sick and tired. *fiḍilt aftaɣal fit-turmaay taman siniin li-ḥadd[i] ma tʕalleet* I went on working on the trams for eight years, till I was worn out. - ava *mitʕall*.

اتعلّ *ʔinʕall* = *ʔitʕall*. - ava *minʕall*.

علّل *ʕallil* /vt/ to account for, give a reason for. *ʔil-baaḥis laazim yiʕallil wighit naẓar-u* the researcher must justify his opinion. - vn *taʕliil*; ava/pva *miʕallil*.

اتعلّل *ʔitʕallil* /vi/ to make excuses. *ʔaẓunn[i] ma-ʕad-f[i] fii dilwaqti ḥaaga titʕallil biiha* now I think there is nothing more for you to use as a pretext. - ava *mitʕallil*.

ع ل ل [2]

علّ *ʕalla* (also *laʕalla*) /adv/ perhaps. *niqul-lu - ʕalla wa-ʕasa yismaʕ kalam-na* we'll tell him, perhaps he'll listen to us.

ع ل ل [3] see ع ل ى: *ʕalaali*

ع ل ل ا ن

علّان *ʕillaan* /n/ assonant complement to *filaan* (q.v.). *nigiib fi-siirit filaan w-niqaṭṭaʕ fi-farwit ʕillaan* we gossip about so-and-so and slander so-and-so.

علّانة *ʕillaana* /n/ feminine of *ʕillaan*.

ع ل م

علم *ʕilim (a)* /vt/ **1** to know (of God). *yiʕlam allaah ʔinni b-aḥibb-ak* God knows I love you. ‖*yiʕlam bii (biiha*, etc.) *rabb-i-na* bad to a degree that only God can comprehend, awful, disastrous, as in *y-aadi l-yoom illi yiʕlam bii rabb-i-na* what an awful day! *ʔig-gawaaza ʕilʕit muṣiiba yiʕlam biiha rabb-i-na* the marriage turned out to be an utter disaster. **2** to know. *m-aʕlam-f[i] ḥaaga ʕan il-mawḍuuʕ* I know nothing about the matter. ‖*da ḥilm[i] walla ʕilm* is that mere wishful thinking or hard fact? - vn *ʕilm*; ava *ʕaalim*; pva *maʕluum*.

علم *ʕilm* /n/ **1** knowledge, information. *ʔil-ʕilm[i] nuur* knowledge is light (a common cliché). ‖*ʕilm-i ʕilm-ak* I know as little as you, I've no idea. - *ʔil-ʕilm[a] ʕand allaah* God alone knows, I've no idea. - *maʕa l-ʕilm[i] ʔinn...* despite the fact that .... - *lil-ʕilm* or *min baab il-ʕilm* for information, as in *baʕatu ṣuurit il-muẓakkira lil-qism lil-ʕilm* they sent a copy of the memo to the department for information. - *yikuun fi-ʕilm-ak* please be informed, take note, bear in mind, as in *yikuun*

fi-ʕilm-ak ʃiza ma-get-ʃ' ḥa-titrifid take note that if you don't come, you'll be fired. — /pl *ʕuluum*/ **2** natural or physical science. *ʕuluum wi-ʃadaab* sciences and arts. *ʕilm in-nafs* psychology. **3** academic discipline, subject. *fis-sana l-ʃuula b-yidrisu magmuuʕit ʕuluum muxtalifa* in the first year they study a number of different subjects. *ʕilm il-luɣawiyyaat* the science of linguistics. — /no pl/ **4** note, memorandum. ‖*gawaab bi-ʕilm il-wuṣuul* a recorded delivery letter.

علمى *ʕilmi* /adj */ **1** scientific. *fii qism' ʕilmi wi-qism' ʃadabi* there is a science department and an arts department. **2** academic, scholarly.

¶ *ʕilmiyyan* /adv/ (1) scientifically. *ʕilmiyyan kull illi bi-ybiʕuu l-ʕaṭṭariin kalaam faariɣ* scientifically speaking, everything the herbalists sell is a lot of nonsense. (2) academically. *ʕilmiyyan ʃana ʃaḥsan min ʃaxuu-ya* I'm better academically than my brother.

علمانى *ʕilmaani* **1** /adj */ secular. **2** /n */ *[Chr]* layman.

عالم *ʕaalim* /n/ **1** Knower (epithet of God). — /pl *ʕulama*/ **2** one trained in Islamic law and theology. *yixlaq min ḍahr il-ʕaalim faasid [prov]* ≈ God may give a good man a bad son. **3** scholar. **4** scientist.

عالمة *ʕalma* /n pl *ʕawaalim*/ woman leader of a troupe of women musicians and dancers. ‖*ḥaẓẓ il-ʕawaalim* ≈ the luck of the devil.

معلوم *maʕluum* /n/ **1** knowledge, known fact. ‖*maʕluum ʃinn* ... it is common knowledge that ..., it is known that ..., as in *maʕluum ʃinn' ma-ḥadd'-ʃ yilaaqi ʃaqqa b-suhuula* we all know that no one can find a flat easily. *-yikuun fi-maʕluum-ak* please be informed, take note, bear in mind. **2** *ʃil-maʕluum* the sum customarily given (e.g., to a beggar or as the monthly tip for a dustman or the like). — /interj/ **3** of course! obviously!

معلومة *maʕluuma* **1** /n pl *-aat*/ item of information. **2** *maʕlumaat* /pl n/ information. ‖*maʕlumaat ʕamma* general knowledge.

معلوميّة *maʕlumiyya* /n/ **1** skill, practical ability. *ṣaaḥib maʕlumiyya* a skilled person. **2** sum customarily given as a fee.

علمان *ʕalmaan* /adj */ aware, informed, cognizant.

علم *ʕalam* /n pl *ʃaʕlaam*/ flag.

أعلام *ʃaʕlaam* /pl n/ notables, people of high social standing.

علامة *ʕalaama* /n pl *-aat*/ **1** mark, affixed sign or inscription. *ʕalaamit il-xitm* the mark made by the stamp. *ʕalamaat it-tarqiim* punctuation marks. ‖*diqiiq ʕalaama* highest quality flour. **2** marker, signpost. *ʕalamaat muruur* traffic signals. ‖*ma-ʃaf-ʃ il-ʕalamaat* he failed the eye test. **3** indication, sign, symptom. *ʕalaamit il-wilaada b-tibqa nzuul damm' ʃaw mayya* the sign that birth is near is the discharge of blood or fluid.

عليم *ʕaliim* /n/ Omniscient One (epithet of God).

أعلم *ʃaʕlam'* /el/ more/most knowledgeable. ‖*ʃallaahu ʃaʕlam* (1) God knows best. (2) only God knows, I've no idea, as in *da nẓaam ʃallaahu ʃaʕlam maṣdar-u ʃeeh* God alone knows how the system started!

علاّم *ʕallaam* /n/ Omniscient One (epithet of God). *ʕallaam il-ɣiyuub* Knower of the unknown (epithet of God).

علّيمة *ʕulleema* /n/ something newly heard or learnt (especially when of only transient value), fad, craze. *hiyya di ʕulleema gdiida* (do you think) this is the latest thing out? *ʃitʕallimt-i-lak ʕulleema* you've got a new hobby-horse. *ʕirift-i-lak ʕulleema* I've heard something new that may help you.

معالم *maʕaalim* /pl n/ features. *maʕaalim il-wiff* the features of the face. *maʕaalim il-balad itɣayyarit xaaliṣ* the town has changed completely in appearance.

عالم *ʕaalam* /n/ **1** /pl *ʕawaalim*/ world. *buṭuulit il-ʕaalam* world championship. *ʕaalam il-fann* the world of art. **2** /fem n, no pl/ people in general. *ʃil-ʕaalam di kull-a-ha* all these people. *kaan fii ʕaalam kitiir* there were masses of people. *ʃismaʕu ya ʕaalam* listen everybody!

¶ *ʕaalamiin: rabb il-ʕaalamiin* the Lord of the universe.

عالمى *ʕaalami* /adj */ **1** world-wide. *mafaakil ʕaalamiyya* world problems. *ʃil-ḥarb il-ʕaalamiyya t-tanya* the Second World War. **2** of international standing, known world-wide. *muhandis ʕaalami* an engineer of international standing.

علّم *ʕallim* /vt/ **1** to teach, train. *ʕallim-ni furb il-xamra* he taught me to drink wine. ‖*ʕallimnaa ʃif-fiḥaata sabaq-na ʕal-ʃabwaab [prov]* (we taught him to beg and he beat us to the doors) ≈ he bites the hand that fed him. **2** to mark. *bi-nʕallim il-xaʃab ʕafaan in-naqr* we mark the wood for the mortising. *ʃik-karabiig ʕallimit fi-gism-i* the whips left marks all over my body. *-vn taʕliim, ʕalaam*; ava/pva *miʕallim*.

تعليم *taʕliim* /n/ education. *wizaarit it-tarbiya wit-taʕliim* the Ministry of Education.

تعليمات *taʕlimaat* /pl n/ instructions, directives.

تعاليم *taʕaliim*↑ /pl n/ teachings, doctrines. *taʕaliim il-masiiḥ* the teachings of Christ.

تعليمى *taʕliimi* /adj/ educational. *ʃisṭuwaana taʕlimiyya* an educational gramophone record.

تعليمجى *taʕlimgi* /n pl *-yya*/ *[mil]* drill instructor.

تعليمخانة *taʕlimxaana* /n pl *-aat*/ *[obsol]* riding school.

معلّم *miʕallim* /n */ **1** title of, and form of address or reference to, a man in traditional society who owns a small business, directs the labour of others, or holds a similar position of authority (e.g., a foreman, shopkeeper, or gang leader) ≈ boss. *ʃana ʃaʁʁaal tabaʕ il-miʕallim* I work under the boss. ‖*xabṭit miʕallim* a master-stroke. **2** polite form of address to a lower-class man.

معلّم *muʕallim* /n */ **1** (male) teacher. *yimuut il-muʕallim wi-huwwa yitʕallim [prov]* even a teacher still has things to learn after living a whole lifetime. *daar muʕallimiin* teacher training college. *baʃʃawiif muʕallim* drill sergeant-major. **2** *[Chr]* leader of congregational prayer responses and hymns, cantor (in the Coptic church).

معلّمة *miʕallima* /n pl *-aat*/ **1** female equivalent of *miʕallim* 1. **2** manly woman, woman of forceful character.

معلّمة *muʕallima* /n pl *-aat*/ (female) teacher.

اتعلّم *ʃitʕallim* /vt/ **1** to be taught, learn. **2** to be marked. - ava/iva *mitʕallim*.

متعلّم *mutaʕallim, mitʕallim*↓ /adj */ (well-)educated.

أعلم *ʃaʕlam*[2] /vt/ to inform. *ʃaʕlamuu-na (bi-)l-mawḍuuʕ* they informed us of the matter. - vn *ʃiʕlaam*; ava *muʕlim*; pva *muʕlam*.

إعلام *ʃiʕlaam* /n/ publicity. *wasaaʃil ʃiʕlaam* mass media. *ʃiʕlaam farʕi [leg]* a court statement of the legal heirs to a person's estate.

إعلامى *ʃiʕlaami* /adj */ pertaining to publicity. *mulḥaq ʃiʕlaami* publicity officer.

استعلم *ʃistaʕlam* /vi/ to inquire. - vn *ʃistiʕlaam*; iva *mistaʕlim*.

استعلامات *ʃistiʕlamaat* /pl n/ inquiries. *(maktab) il-istiʕlamaat* information desk.

ع ل ن [1]

علن *ʕalan*↓ = *ʃaʕlan*.

علنا *ʕalanan* /adv/ publicly, openly.

علنى *ʕalani* **1** /adj, often invar/ public, open, overt. *ʃiʕdaam ʕalani* public execution. *di sirʔa ʕalani* this is daylight robbery! *ʕala l-ʕalani* publicly, openly. **2** /adv/ openly, overtly. *bi-yʁiff*[a] *ʕalani* he cheats openly.

أعلن *ʃaʕlan* /vt/ **1** to announce, declare. *ʃil-mufti b-yiʕlin ir-ruʃya* the mufti announces the sighting (of the new moon). *ʃil-ḥukuuma ʃaʕlanit ittiḥaad gidiid* the government announced a new union. *ʃaʕlanu l-ḥarb* they declared war. **2** to inform. *ʃil-ḥaaḍir yiʕlin il-ʁaayib* he who is present should inform the absentee. **3** to display. *ʃaʕlan zaʕal-u* he showed his annoyance. - vn *ʃiʕlaan*; ava *muʕlin*; pva *muʕlan*.

¶ *ʃaʕlan ʕan* (1) to give formal notice of. *ʃaʕlanu ʕan ig-galsa g-gayya* they gave notice of the forthcoming session. (2) to advertise. *bi-yiʕlinu fig-garaayid ʕan ʃaṣnaaf sagaayir ma-lhaa-ʃ wuguud fis-suuq* they advertise in the papers types of cigarettes that are not to be found in the market.

إعلان *ʃiʕlaan* /n pl *-aat*/ **1** advertisement. **2** *[leg, comm]* notification.

معلن *muʕlin* /n */ advertiser.

ع ل ن [2]

see ع ل ل ا ن : *ʕillaan, ʕillaana*

ع ل و

see ع ل ى : *ʕuluww, ʕiliww, ʕulwi, ʕilw, ʕilwi, ʕilaawa, ʕalaawa, ʕilleewi*

ع ل و ل ا

علولا *ʕalawla* /adv/ **1** completely, altogether. *xallaṣuu-ha ʕalawla* they finished it off completely. **2** continually. *ʃil-walad bi-yitbawwaʕ ʕalawla* the child keeps vomiting.

ع ل و ن

see ع ن و ن : *ʕilwaan*

ع ل ى

see also ع ا ل [1]

على *ʕili (a)* /vi/ **1a** to become high(er), increase in height. *kull*[i] *yoom il-ʕimaara ʕammaala tiʕla* every day the building keeps getting higher. *ʃil-babuur bi-yiʕla* the stove(-flame) burns higher. **1b** to become high(er) off the ground. *ʃiṭ-ṭayyaara ʕilyit* the plane flew higher. ‖*ʃilli ʕili ʕili [prov]* ≈ one who has gone to the top is out of reach (of his friends). - *ʕili walla wiṭi* whatever his standing, whatever people say about him. **2** to improve in quality. *mustawa l-maʕiiʃa laazim yiʕla* the standard of living has to rise. ‖*beet in-nattaaf ma-yiʕlaa-ʃ [prov]* ≈ thieves never prosper. **3** to increase statistically or quantitatively. *ʕadad is-sukkaan bi-yiʕla* the population increases. *murattab-i ʕili* my salary went up. **4** to increase in volume, become loud(er). *ṣoot-u ʕili w-huwwa b-yitxaaniʔ* his voice rose while he was quarrelling. **5** to become rough (of the sea). *ʃil-moog ʕili* the waves got rougher. - vn *ʕilw, ʕiliww, ʕuluww*; ava *ʕaali*.

¶ *ʃiʕla* /fem *ʃiʕli*, pl *ʃiʕlu*/ *[joc slang]* hand over! give! *ʃiʕla b-sigaara* give me a cigarette!

علوّ *ʕiliww, ʕuluww* /n/ height, elevation. *ʕiliww-a-ha ʃaktar min miyya w-sabʕiin santimitr* it is more than 170 cm. high. *baʕd*[i] *ma yṭuul zarʕ it-tiil ʕiliww*[i] *mitreen* after the flax plants reach two metres in height. *zawya ʕuluww* angle of elevation. ‖*bi-ʕliww*[a] *ḥiss-i* at the top of my voice.

عالى ʕaali /adj */ **1a** tall, **high**. *ʕimaara ʕalya* a tall building. *ṭaliʕ fil-ʕaali* **(1)** being pretentious. (2) going upstream (in the **jargon of** Nile boatmen). ‖ *ʃil-muus fii ʕaali w-waaṭi* the razor blade is dented. *-gaab ʕalii-ha waṭii-ha* he **turned** everything upside-down, he upset things **completely**. **1b** high off the ground. *saḥaab ʕaali* high **cloud**. **2** high-quality, superior. *ʃaxlaaq-u ʕalya* he has **high moral** standards, he is an upright man. *ʃit-taʕliim il-ʕaali* **higher** education. *daar il-qaḍaaʔ il-ʕaali* **supreme** court building. **3** statistically high. *nisba ʕalya* **a high** proportion. *ʃasʕaar ʕalya* high prices. ‖ *kunyaak ʕaali* high-proof cognac. **4** loud. *ʃir-radyu ʕaali qawi* the radio is very loud. **5a** rough (of the sea). **5b** shallow (of a river, in the jargon of Nile boat-men). **6** high (in pitch).

عال ʕaal[1] see ع ا ل [1].

علو ʕilw /n/ **1** height. *bi-ʕilw[i] raas-ak* as high as your head. **2** *[rur]* heap. *ʕilw[i] barsiim* a large amount of clover.

علوى ʕulwi or ʕilwi /adj */ **1 upper**, above. *ʃid-door il-ʕulwi* the upper floor. **2** elevated, raised. *kubri ʕulwi* an elevated footbridge.

أعلى ʔaʕla /el/ higher/highest, louder/loudest, etc. *maglis ʔaʕla* supreme council. *ʃil-qaaʃid il-ʔaʕla* the supreme commander.

على ʕala /often shortened before def art to ʕa-; w pron suff *ʕalee-* (1st sing *ʕalayya*)/ preposition indicating **1** location upon, **1a** literally. *ʕaṭ-ṭarabeeza* on the table. *ʕala raas ig-gabal* on the **top** of the mountain. **1b** figuratively. *ʃis-salaamu ʕaleekum* peace be upon you. **2** location above, **2a** literally. *ṭayra ʕala ʃawaafi f-fagar* flying above the treetops. *ʃibbaak bi-yṭull[a] ʕag-gineena* a window that looks out over the garden. **2b** figuratively. *raʃiis ʕala kull il-ʕummaal* supervisor over all the workers. *ma-tʕallii-ʃ ṣoot-ik ʕala ṣoot ʃabuu-ki* don't raise your voice above your father's! *ʃil-qassiis bi-yṣalli ʕala l-mariiḍ* the priest prays over the sick man. **3** location at. *saakin ʕala naṣyit if-faariʕ* living on the corner of the street. *ʕuum uqʕud ʕal-maktab* go and sit at the desk. *biina nuqʕud ʕal-qahwa* let's go and sit in the coffee house. **4** motion to a position upon, **4a** literally. *ʃil-maṭar baḍa naazil ʕala rus-na zayy il-ḥanafiyya* the rain started pouring down on our heads like water from a tap. **4b** figuratively. *farraḍit ʕeef ʕal-ʕalaaba* she gave out bread to the poor. **5** motion towards. *ʕala feen* where to? *hiyya gayya ʕaleena* is she coming towards us? *ʃaawir ʕalee* point to him! *misaafir ʕala skindiriyya* travelling to Alexandria. **6** temporal relationship, **6a** of a precise nature. *ga ʕal-maʕaad* he came at the appointed time. *ʕaṣ-ṣubḥ* first thing in the morning. **6b** of an approximative nature. *taʕaalu ʕas-saaʕa sitta* come around six o'clock. *ʕala ʃaaxir is-sana nkuun ʕirifna ʃwayyit ḥisaab* by the end of the year we will have learned some arithmetic. **6c** of an extended nature. *ḥa-niʕmil if-fugla ʕala tamant iyyaam* we'll do the job over eight days. *ʕala marr is-siniin* with the passing of the years. **7** antagonistic or adversative relationship. *ʃinta maʕaana walla ʕaleena* are you with us or against us? *ma-ʃuft[i]-ʃ ʕalee ḥaaga* I've seen nothing to his discredit. *waṭṭi n-naar ʕal-ḥalla ʃwayya* reduce the fire a little under the pot. ‖ *ʕalee* sick 'em! at him! (to a dog). **8** governance by a condition. *ʃil-farxa ʕaleeha l-beeḍa* the hen is about to lay. *ʃil-bint[a] ʕaleeha l-ʕaada* the girl is having her period. *ʕalee ʕafriit* he's possessed. **9** incumbency or duty. *ʕaleek kaam* how much do you owe? *ʃid-door ʕala miin* whose turn is it? *ʕaleek il-mafatiiḥ* the keys are your responsibility. ‖ *ma-ʕalek-ʃ[i] minnu* don't bother about him. *-ʕaleek min da b-ʃeeh* why should you have to do that? *-ʕal-alla* (it's up to God) ≈ let's hope ..., as in *ʕal-alla yiigi bukra* let's hope he comes tomorrow, *ḥa-yingaḥ is-sanaa-di -ʕal-alla* 'He'll pass (the exam) this year.' 'Let's hope so!' **10** object of reference or concern. *fukran ʕaʃ-faay* thanks for the tea. *ʃiḥkii-li ʕalee* tell me about it. *saʃal ʕaleek* he asked after you. *ʕaṭafit ʕalayya* she showed tenderness toward me. *ʃis-safar sahl[a] ʕalayya* travel is easy for me. *bi-yquulu ʕalee ʕayyaan* they say he's sick. *niwazzaʕ filuus ʕala rooḥ il-mayyit* we distribute money for the sake of the deceased's soul. **11** relationship characterized by disproportion. *ʃid-dinya ḥarr[i] ʕalayya* it's too hot for me. *ʃil-fustaan kibiir ʕaleeha* the dress is too large for her. *di lissa ṣṿayyara ʕag-gawaaz* she's still too young for marriage. *lissa badri ʕal-ṿada* it's still too early for lunch. **12** ground or basis. *ʕala ʃeeh* what for? *ʕumuula ʕaz-ziyadaat* a commission on the extra sales. *ʃaṭirii-ha ʕal-muʕayna* I'll buy it on condition that I give it a personal inspection. *ʕalaa-di l-ḥaal* in this state. **13** manner or form. *ʕala maraaḥil* in stages. *ʕala ʃaṭkaal* in (various) shapes or sorts. **14** accordance. *ʃugrit il-ʃiʕlaan titqaddar ʕala ʕadad ik-kalimaat* the charge for an advertisement is estimated according to the number of words. *bi-yitṣarraf ʕala qadd[i] sinn-u* he behaves in accordance with his age. *raqaṣit ʕaṭ-ṭabla* she danced to the drum. ‖ *ʕala keef-ak* as you wish. *-ʕala mihl-ak* easy does it! *-ʕala kida* (1) in this way, as in *ʃiḥna ʕala kida miʃ ḥa-nixlaṣ* we'll never get through if we go on like this. (2) that being the case, as in *huwwa ʕala kida miʃ ḥa-yiigi* if that's the situation, he won't be coming. (3) at that, with that, as in *xallaṣ kalaam-u ʕala kida* with that he stopped speaking. **15a** state.

bi-yḍarrabu l-budra ʕan-naaʃif they mix the powder dry. *mitgawwiza ʕala ḥubb* she married while in love, she made a love-match. *xallifit ʃawlad-ha ʕala kibar* she had her children when she was old. **15b** tendency. *ʃiʃ-ʃaariʕ ṭaaliʕ ʕala xafiif* the street slopes gently upward. *sinaan-u zayy[i] snaan il-miʃṭ[i] bass[a] ʕala rfayyaʕ* its teeth are like those of a comb but on the thin side. *ʕaayiz in-naqʃa di bass[a] ʕala ɣaamiq* I want this pattern but in a darker shade. **16** addition. *ʃiddii-ni xamsa kiilu burtuqaan ʕala kiilu yusafandi* give me five kilos of oranges and one of tangerines.

¶ *ʕala ma* /conj/ (1) by the time that. *ʕala ma wiṣlu kaan rawwaḥ* by the time they arrived he had gone home. *ʕala ma yiigi ḥ-akuun gaahiz* by the time he comes I shall be ready. (2) until. *xallii-ha ʕandi ʕala ma yiigi* leave it with me until he comes. *xallaa-ha ʕandina ʕala ma gum* he left it with us till they came. - *ʕala ʃinn* /conj/ (1) as if. *bi-yʕamluu-ni ʕala ʃinni bn-u-hum* they treat me as if I were their son. (2) on the assumption that. *kallimit-ni ʕala ʃinni ʃana ʕali* she spoke to me thinking that I was Ali. - *ʕala baal ma* = *ʕala ma*. - *ʕalaʃaan* see ع ش ا ن - *maʕaliff, maʕaleef* see م ع ل ش ش

علي *ʕali* /prop n/ male given name. ‖ *ʃabu ʕali* (1) nickname for *ḥasan*. (2) epithet for a generous and noble man. *ʕamal ʃabu ʕali* to act the big-shot, spend lavishly and recklessly in an attempt to impress. - *wilaad ʕali bamba* street acrobats. - *ʃumm[a] ʕali* confection made of layers of thin pastry and often with a stuffing of nuts and raisins, baked in sweetened milk and *samna*. - *ʕali ʕawaq* epithet for a cart-driver.

علاوة *ʕilaawa* or *ʕalaawa* /n pl *-aat*/ rise in pay, increment.

¶ *ʕilaawa ʕala* /prep/ in addition to. *ʕalaawa ʕala kida* moreover.

علّي *ʕaliyy* /n/ Most High One (epithet of God).

علّيوى *ʕilleewi* /adj invar/ *[slang]* higher, upper. *ʃiṭ-ṭabaqa l-ʕilleewi* the upper class.

معالي *maʕaali: ṣaaḥib il-maʕaali [obsol]* ≈ His Excellency (a form of reference to a cabinet minister).

أعالي *ʃaʕaali* /pl n/ heights, highest regions. *ʃaʕaali n-niil* the the upper reaches of the Nile. *ʃil-magd[i] li-llaah fil-ʃaʕaali* glory to God in the highest. ‖ *ʃaʕaali l-biḥaar* the high seas.

علالي *ʕalaali: fil-ʕalaali* very high up. *ʃil-bint illi manaxir-ha fil-ʕalaali* the girl with her nose in the air. *ʃil-asʕaar ṭaaḥit fil-ʕalaali* prices shot sky-high.

تعالى *taʕaala[1]* see ت ع ا ل

علا *ʕalla* /vt/ **1a** to make high(er), make tall(er). *ʕallu ʕmaara* they put up a building. **1b** to raise (off the ground). *ʕalleet-u ḥaṭṭeet-u ʕala r-raff il-foqaani* I put it up on the top shelf. **2** to make superior, improve. *bi-yʕallu guudit il-ʃintaag* they are improving the quality of production. **3** to raise statistically or quantitively. *ʕawziin niʕalli nisbit il-ʃalyaaf iṣ-ṣinaʕiyya* we want to increase the proportion of synthetic fibres. **4** to make loud(er). *ma-tʕallii-ʃ ḥiss-ak* don't raise your voice! *ʕalleet ir-radyu* I turned up the radio. — /vi/ **5** to gain height. *ʃiṭ-ṭayyaara ʕallit* the plane mounted into the sky. *ʃir-riiʃa ʕallit* the feather wafted up high. ‖ *ʕalli* shoo! (to a kite (bird)).

اتعلّى *ʃitʕalla* /vi/ passive of *ʕalla*. - iva *mitʕalli*.

اتعالى *ʃitʕaala* /vi/ to act high and mighty. *ʃil-mudiir bi-yitʕaali ʕala l-muwaẓẓafiin* the manager lords it over the employees. - vn *taʕaali*; ava *mitʕaali*.

تعالى *taʕaala[2]: ʃallaah subḥaan-u wa-taʕaala* God, praised and exalted is He.

استعلى *ʃistaʕla* /vt/ **1** to consider (too) high, tall, loud etc. **2** to select for height, tallness, loudness etc. — /vi/ **3** *[naut]* to heave short. **4** to act high and mighty. - vn *ʃistiʕla*; ava *mistaʕli*.

ع م ب ر see ع ن ب ر

ع م د [1]

عمد *ʕamd* **1** /n/ intent, deliberateness. *ʃil-mawḍuuʕ ḥaṣal kida min ɣeer ʕamd* the affair happened just like that without any intention. **2** /adj invar/ deliberate. *ʃil-qatl il-ʕamd* first degree murder. **3** /adv/ deliberately. *kasarit-u ʕamd[i] kida* she broke it intentionally.

¶ *ʕamdan* /adv/ deliberately. *maʕquul ʃinni ʃaksar-u ʕamdan kida* is it conceivable that I should break it on purpose just like that?

عمدة *ʕumda* **1** /n pl *ʕumad*/ headman of a village and its dependencies, mayor. **2** /adj invar/ placid, carefree. *ʃaxuu-k da raagil ʕumda* that brother of yours lives in a world of his own!

عمدية *ʕumudiyya* /n/ area of jurisdiction of an *ʕumda*. *ʃintixabaat il-ʕumudiyya* mayoral elections.

عماد *ʕimaad[1]* /n/ **1** male given name. **2** *(faariʕ) ʕimaad id-diin* Emad ed-Din Street, a major thoroughfare running through north-central Cairo from Twenty-sixth of July Street to Bab el-Hadid Square.

عمادة *ʕimaada* /n/ deanship, position of a dean.

عمود، عامود *ʕamuud* /n pl *ʕawamiid, ʕimdaan, ʃaʕmida*/ **1** post, pillar, column, shaft. *ʕamuud il-maṭaafi* fireman's pole. *ʕamuud id-diriksiyoon [auto]* steering column. *ʕamuud il-kirdaan [auto]* transmission shaft. *ʕamuud id-daffa [naut]* rudder stock. ‖ *ʕamuud nuur* lamp-post. - *ʃil-ʕamuud il-faqri* the

spinal column. -*kabriit il-ʕamuud* raw sulphur. **2** column of print. **3** winding stem (of a watch or clock).

عمودة، عامودة *ʕamuuda* /n/ *[rur]* flail.

عمودى، عامودى *ʕamuudi* /adj/ perpendicular, vertical.

عميد *ʕamiid* /n pl *ʕumada*/ **1** *[acad]* dean. *ʕamiid iṭ-ṭalaba* dean of students. ‖*ʕamiid is-silk id-diblumaasi* the doyen of the Diplomatic Corps. **2** *[mil]* brigadier-general. *ʕamiid baḥri* commodore. *ʕamiid ṭayyaar* air-commodore.

عامد *ʕaamid: bil-ʕaamid* /adv/ **1** in order to spite or upset. *miʃ ḥ-aruuḥ bil-ʕaamid fiik* I am not going to go to spite you. **2** contrarily. *dayman yiʕmil bil-ʕaamid* he always acts contrarily.

اتعمّد *ʔitʕammid*[1] /vt/ to do (s.th.) intentionally. *bi-yitʕammidu taʔxiir gawabaat-i* they deliberately delay my letters. -ava *mitʕammid*.

تعامد *taʕaamud*↑ /n/ verticality, perpendicularity.

متعامد *mitʕaamid*↑ /adj */ perpendicular, at right angles.

اعتمد *ʔiʕtamad*↑ /vt/ **1** to endorse, approve, accept as valid. *ʔil-mudiir iʕtamad il-ʔiṣalaat* the director endorsed the receipts. *tawqiiʕ muʕtamad* an approved signature. *ʔiṣ-ṣuura di ma-tuʕtamad-f*[i] *fil-maḥkama* this copy is not admissible in court. **2** to allocate (a sum of money). *ʔiʕtamadu talatt alaaf gineeh liḍ-ḍaḥaaya* they allocated three thousand pounds for the victims. **3** to patent. ‖*buṣla muʕtamada* a standard compass. -/the literary passive form is found in all senses/. -vn *ʔiʕtimaad*; ava *muʕtamid*; pva *muʕtamad*.

¶ *ʔiʕtamad ʕala* to rely on, depend on. *ḥ-aʕtimid ʕala kilmit ḥaḍrit-ak* I shall rely on your word, Sir. *ʔil-musiiqa t-taṣwiriyya lil-baraamig bi-tiʕtimid ʕala l-mawḍuuʕ nafs-u* the background music for the programmes depends on the subject itself. *ʔiʕtamadna ʕala llaah* we have put our trust in God. ‖*ʔilli yiʕtimid ʕaleeku yiʕtimid ʕala llaah* he who depends on you (might as well) depend on God ≈ you are completely unreliable.

اعتماد *ʔiʕtimaad* /n pl -*aat*/ **1** endorsement. ‖*ʔawraaq iʕtimaad* letters of credence (e.g., of a diplomat). **2** allocation. **3** patent.

ع م د[2]

عماد *ʕimaad*[2] /n/ baptism.

معمدان *maʕmidaan: yuḥanna l-maʕmidaan* John the Baptist.

معمدانى *maʕmidaani* **1** /adj */ *[Chr]* Baptist. *ʔil-kiniisa l-maʕmidaniyya* the Baptist Church. **2** /n */ a Baptist.

معموديّة *maʕmudiyya* /n/ *[Chr]* baptism. *gurn*[i] *maʕmudiyya* font.

عمّد *ʕammid* /vt/ *[Chr]* to baptize. -vn *taʕmiid*; ava *miʕammid*; pva *muʕammad*.

اتعمّد *ʔitʕammid*[2] /vi/ *[Chr]* to be baptized. -iva *mitʕammid*.

ع م ر

عمر *ʕimir (a)* /vi/ **1** to prosper, thrive. *biyut-hum ʕimrit baʕd il-ḥarb* they did well after the war. ‖*dayman ʕaamir* ≈ may your house always be prosperous (said to a host after eating or drinking). **2** to become inhabited, be built up. *kull-a-ha sana wi-tneen wi-manṭiqit il-haram tiʕmar wi-tibqa zayy*[i] *maṣr* in no more than a couple of years the Pyramids area will be built up and will have become just like Cairo. **3** to be held (of a *muulid*). *muulid is-sayyida ḥa-yiʕmar min yoom ʔarbaʕtaafar* the *muulid* of the Sayyida (Zaynab) will be held from the fourteenth. *ʔeeh il-mawaalid illi ʕamraana dilwaqti* what *mawaalid* are being celebrated at the moment? -vn *ʕamaraan, ʕamaar*; ava *ʕaamir, ʕamraan*.

عمار *ʕamaar* /n/ **1** prosperity. ‖*rabb-i-na yigʕal-u ʕamaar* may Our Lord make it (i.e. your house) prosperous (said on refusing an offer of food or to one's host after eating). -*ma-fii-ʃ beeni w-beenu ʕamaar* we are not on good terms. **2a** development, civilization. **2b** built-up area, inhabited area. *ʔil-ḥitta di ʕamaar* this part is full of buildings.

عمران *ʕamraan* /adj */ **1** prosperous. **2a** developed, civilized. **2b** populated, inhabited. **3a** filled, charged, loaded. **3b** drunk, stoned, high. **4** in good condition.

عمرة *ʕamra* /n pl -*aat*/ overhaul, major repair job.

عمرى *ʕamri: balaḥ ʕamri* dates of an elongated yellow type, tough in consistency.

عمر *ʕumr* /n pl *ʔaʕmaar*/ life span, age. *ṭuul ʕumr-i* all my life long. *ʕumr-ak kaam* how old are you? *ma-fii-ʃ ʔagmal minnu l-kull in-naas wi-l-kull il-ʔaʕmaar* there's nothing better for all people of all ages. *tibqa mistaʏni ʕan ʕumr-ak law xaragt* your life won't be worth living if you go out! ‖*baʕd*[i] *ʕumr*[i] *ṭawiil* (1) after a long life! (conventional exclamation to one who mentions his own death). (2) after a very long time. -*ʔil-ʕumr*[i] *waaḥid wir-rabb*[i] *waaḥid* ≈ one's destiny is decreed by God (said to abate fear of death). -*ʔiddii-ni ʕumr*[i] *wi-rmii-ni l-baḥr [prov]* (grant me a long life and you can throw me in the sea) ≈ you can do as you like if you can control the outcome.

¶ *ʕumr- -ma-* modal of absolute negation. *ʕumr-i m-adaxxin* I never smoke. *ʕumr-i-na ma-biʕna b-ʔazyad min it-tasʕiira* we have never sold at higher than the

fixed price. *ʕik-kalaam da ɛumr-u ma-yitɛaal* such a thing should never be said. *ʕik-kasal ɛumr-u ma-ygiib filuus* being lazy never makes money.

عمرة *ɛumra* /n/ *[Isl]* abbreviated form of the pilgrimage ceremonies which may be performed at any time of the year.

عمران *ɛumraan* /n/ upkeep, maintenance.

عمر *ɛumar* /prop n/ male given name. ‖*ya ɛumar [women in trad soc]* exclamation of contempt, as in *mustawaa-ha da ʕeeh ya ɛumar* ≈ pooh! where does she come from?!

عمارة *ɛimaara* /n pl *-aat, ɛamaayir*/ **1** apartment building, block of flats. **2** construction, building and architecture. *qism il-ɛimaara* the Architecture Department.

معمارى *miɛmaari* /adj */ relating to building and architecture. *muhandis miɛmaari* architect. ‖*diraaɛ miɛmaari* linear measure equal to 0.75 metres.

عمّر *ɛammar* /vt/ **1a** to cause to prosper. *rabb-i-na yɛammar beet-ak bi-barakit in-nabi* may Our Lord make your house prosper with the Prophet's blessing! (expression of gratitude). **1b** to build up, develop for habitation. *laazim yiɛammaru manʈiqit il-qanaal baɛd il-ħarb* they have to build up the Canal area after the war. **2** to repair. *naadir dilwaqti lli yiɛraf yiɛammar is-sawaaqi* rare nowadays is someone who knows how to repair water-wheels. *kawaliin niɛammar [vendor's cry]* we repair locks! **3** to charge, load, fill (s.th.) with (fuel). *bi-tɛammar il-babuur gaaz* she fills the stove with paraffin. *bunduqiyya mɛammara* a loaded rifle. ‖*ɛammar iṭ-ṭaasa* to get loaded, get stoned. -*giyuub-u mɛammara* he's loaded with money. -*ruzz' mɛammar* baked rice pudding with nuts and raisins. — /vi/ **4** to last, stay in good condition. *laazim tiraaɛi l-ɛarabiyya ɛaʃaan tiɛammar* you must see that the car is looked after so that it lasts. **5** *[agric]* to plant (a crop). *ħa-tɛammar ʕeeh is-sanaa-di* what are you going to plant this year? -vn *taɛmiir*; ava/pva *miɛammar*.

تعميرة *taɛmiira* /inst n, pl *-aat*/ **1** a fill, sufficient fuel to fill a stove or the like once. **2** sufficient tobacco or hashish for one smoke.

معمّر *miɛammar* /adj */ **1** long-lived. **2** *[hort]* perennial.

اتعمّر *ʔitɛammar* /vi/ **1** passive of *ɛammar*. **2** to get high, get stoned (on, e.g., alcohol or drugs). -iva *mitɛammar*.

استعمر *ʔistaɛmar* /vt/ to occupy, colonize. -vn *ʔistiɛmaar*; ava *mustaɛmir, mistaɛmar*; pva *mustaɛmar, mistaɛmar*.

استعمار *ʔistiɛmaar* /n/ colonialism.

استعمارى *ʔistiɛmaari* /adj/ colonial.

مستعمر *mustaɛmir* /n */ colonialist.

مستعمرة *mustaɛmara* /n pl *-aat*/ **1** *[pol]* colony. **2** housing and social development (e.g., for the employees of a company).

ع م ش

عمش *ɛamaʃ* /n/ blear-eyedness.

أعمش *ʔaɛmaʃ* /adj, fem *ɛamʃa*, pl *ɛumʃ*/ purblind, dim-sighted. ‖*ɛala ma titkaħħal il-ɛamʃa ykuun is-suuq xirib [prov]* by the time a dim-sighted woman has painted her eyes the market is over (of one who is too slow to snap up an opportunity).

ع م ص

عماص *ɛumaaṣ* /n/ **1** sandman's dust, sleepy dust. **2** purulent discharge from the eyes.

عمّص *ɛammaṣ* /vi/ to produce a discharge (of the eyes). ‖*waad miɛammaṣ* an oaf. -vn *taɛmiiṣ*; ava *miɛammaṣ*.

ع م ق

عمق *ɛumq, ɛumqˆ* /n pl *ʔaɛmaaqˆ*/ depth.

عميق *ɛamiiqˆ* /adj/ deep. *fuɛuur ɛamiiq* profound feeling.

أعمق *ʔaɛmaq* /el/ deeper/deepest.

اتعمّق *ʔitɛammaq* /vi/ to go deeply, become deeply involved. *ʔilli ɤaawi dars' b-yitɛammaq fil-mawduuɛ* the one who is keen to study goes deeply into the subject. -vn *taɛammuq*; ava *mitɛammaq, mutaɛammiq*.

ع م ل

عمل *ɛamal' (i)* /vt/ **1** to do. *ħa-tiɛmil ʕeeh bil-filuus di* what will you do with this money? *ɛamalna fiik ʕeeh* what have we done to you? ‖*ɛamal illi ma-yitɛimil* to do the impossible. -*ɛamal wi-sawwa* to perform great exploits, do wonders, as in *wi-qaɛad yiquul ɛamalt' w-sawweet wi-miʃ ɛaarif ʕeeh* and he went on saying how he'd done this, that and I don't know what else. **2a** to make, manufacture, prepare. *ʔit-tarzi ɛamal-li l-badla f-yomeen* the tailor made me the suit in two days. *ʔil-ʔaqfaaṣ maɛmuula mig-giriid* the crates are made of palm-stalk. *ʔil-ħaraami ɛamal fatħa fil-ħeeṭa daxal minha* the thief made a hole in the wall through which he entered. *ʔiɛmil-li kubbaayit lamuun* make me a glass of lemonade. **2b** to have made, have manufactured, have prepared. *ɛamalt' fustaan ɛand il-xayyaaṭa lli gambiina* I had a dress made by the dressmaker near us. *ɛamalt' karaasi gdiida liṣ-ṣaloon* I had new chairs

made for the sitting room. **3** to create, devise. *miin ʕamal il-qiṭʕa l-musiqiyya di* who wrote this piece of music? *ʃismaḥ-li bass illi ʕamal il-qanuun da ḥmaar* excuse me (for saying so), but the person who drew up this law is an ass. **4** to form. *ʃil-quṭn[i] ʕamal looz* the cotton formed bolls. *ʃig-garḥ[i] ʕamal midda* the wound turned septic. **5a** to fix, see to. *wi-ḥayaat-ik ʃiʕmili zuraar il-ʕamiiṣ* please, would you fix the shirt button? *xalli s-sabbaak yiigi yiʕmil is-sifoon* get the plumber to come and see to the cistern. **5b** to have fixed or seen to. *dayman b-aʕmil ʕarabiyyit-i fil-ʃajans* I always have my car fixed at the dealer's. **6** to cause. *ʃil-ʕiyaal ʕamliin dawʃa* the children are making a racket. *ʃumbuubit il-butagaaz ʕamalit ḥariiʕa* the butane gas cylinder caused a fire. *ʕamalu mafaakil fi-kull[i] ḥitta raḥuu-ha* they made problems wherever they went. **7** to mount, put on. *kull[i] ʃusbuuʕ tiʕmil ḥafla* every week she throws a party. *ʃimta ḥa-tiʕmilu masraḥiyyit ʃaaxir is-sana* when are you going to put on the end-of-year play? **8a** to make into, turn into. *xudi t-tiin da ʕmilii marabba* take these figs and make them into jam. **8b** to cause to be. *ʕamal-ni mudiir ʕala kull if-firka* he made me director of the whole company. **8c** to make (o.s.) out to be. *ʕamalit (nafs-a-ha) ʕabiṭa* she played the fool. *ʕamalt[i] (nafs-i) naayim* I pretended to be asleep. **9** to commit. *ʕamalt[i] znuub kitiir* I committed many sins. *ʕamal is-sabʕa w-dimmit-ha* he left no sin uncommitted. **10** to yield. *ʃil-ʃashum ʕamalit sitta fil-miyya* the shares realized six percent. *ʃil-faddaan ʕamal xamas ʕanaṭiir ʕuṭn* the feddan yielded five *ʕinṭaar* of cotton. **11** to effect. *ʕamalt[i] sulfa mil-bank* I arranged a loan from the bank. *ʃiz-ʒaabiṭ ʕamal-li maḥḍar* the officer made out a charge against me. **12** to assign, designate. *b-aʕmil-laha ʕaʃara saay fil-ʃusbuuʕ* I put ten piastres aside for her a week. *ʃil-mudarris ʕaamil lina saaʕa lil-muragʕa* the teacher is giving us an hour for revision. ‖ *ʕamal ḥisaab* see *ḥisaab*. **13a** to perform, carry out. *mumkin tiʕmil-li xidma* could you do me a service? *ʃid-duktoor da b-yiʕmil il-muṣraan il-ʃaʕwar bass* that doctor only does appendectomies. ‖ *ʃil-ʕarabiyya b-tiʕmil xamsiin kiilu fig-galoon* the car does fifty kilometres to the gallon. **13b** to have performed, have carried out. *ʕamalt[a] ʕamaliyya* I had an operation. — /vi/ **14** to behave, act. *bi-yiʕmil zayy in-naas ig-gahala tamaam* he acts just like an ignoramus. *ḥ-aʕmil bi-kalaam-ak* I'll do as you say. *ʃilli b-yiʕmil bi-yiʕmil bi-ʃaṣl-u [prov]* people act in all things according to their background. ‖ *yiʕmil zayy in-naas [euphém]* to go to the lavatory. **15** to work. *ʕamal bi-ʃakl-u* he worked for his food. **16** to become. *ʕamal raʃiis gumhuriyya* he became President of the Republic. *ʕamal-laha ʃabb[i] w-zoog wi-ʃaxx[i] kamaan* he became to her a father, husband and brother as well. - vn *ʕamal, ʕimaala, ʕamalaan*; ava *ʕaamil*; pva *maʕmuul*. ¶ *ʕamal zayy* to become like. *ʃil-ʕaya xallaa-ha ʕamalit zayy il-ʕaṣaaya* illness made her as thin as a stick. *manaxiir-u ʕamla zayy[i] munqaar il-ɣuraab* his nose looks like a crow's beak.

عمل *ʕamal*[2] /n/ **1** black magic, sorcery. *maʕmul-luhum ʕamal* a spell has been cast against them. — /pl *ʃaʕmaal*/ **2** act, action. *gadwal ʃaʕmaal* agenda. *ʃahamm[i] ʃaʕmaal il-ḥigg il-ʃiḥraam* the most important of the acts of pilgrimage is the putting on of the pilgrim dress. ‖ *wil-ʕamal* or *wi-ʃeeh il-ʕamal* what's to be done? - *sifr il-ʃaʕmaal [Chr]* the Acts of the Apostles. **3** work, job of work. *laazim ninaẓẓam il-ʕamal* we have to organize the work. *ʕamal-u ʃeeh* what's his job? *ʃaʕmaal ʃidariyya* administrative jobs. *ʃaʕmaal ʃafawiyya w-taḥririyya* oral and written work. *ʃaʕmaal is-sana [acad]* (marks given for) the year's classwork. **4** operation, manoeuvre. *ʃaʕmaal ḥarbiyya* military operations. **5** feat, exploit. *ʕamal xaariʕ* a breakthrough. — *ʃaʕmaal* /pl n/ **6** business. *raagil ʃaʕmaal* a businessman. *ʕandi ʃaʕmaal kitiir fi-maṣr* I've a lot of business to do in Egypt.

عملى *ʕamali* /adj/ practical. *taṭbiiʕ ʕamali* practical application.

عامل *ʕaamil*[1] /n/ **1** /pl *ʕummaal*/ labourer, worker. **2**↑ /pl *ʕaamiliin*/ employee. ‖ *ʃuʃuun il-ʕaamiliin* personnel department. **3** /pl *ʕawaamil*/ **3a** factor. *ʃahamm[a] ʕaamil bin-nisbaa-li z-zaman* the most important factor as far as I'm concerned is the time. **3b** agent. *ʕawaamil muʃaksida* oxidizing agents. — /adj */ **4**↑ active, diligent. *ʃil-ʃaʕḍaaʃ il-ʕaamiliin* the active members.

عمّالى *ʕummaali* /adj */ pertaining to labour. *ʕaḍaaya ʕummaliyya* labour issues.

عملة *ʕamla* /n pl *ʕamaayil*/ deed, act (usually bad). *ʕamalt[a] ʕamla ma-hiyyaa-ʃ laṭiifa* I did something that was not nice. *leeh il-ʕamaayil di* why this (bad) behaviour? *miskuu f-ʕamlit-u* they caught him in the act, they caught him redhanded.

عملة *ʕumla* /n pl *-aat*/ currency, money. *ʃil-ʕumla ṣ-ṣaʕba* hard currency.

عمليّة *ʕamaliyya* /n pl *-aat*/ **1** process, operation. *ʕamaliyya ṣnaʕiyya* an industrial process. *ʕamaliyyaat ṭibaaʕa* printing processes. ‖ *ʃil-ʕamaliyya g-ginsiyya* the sexual act. **2** surgical operation. *ʕandaha qurḥa*

ɛayza ɛamaliyya she has an ulcer that needs operating on. *ɛamalt^{i} talat ɛamaliyyaat* I had three operations. 3 matter, business. *di ɛamaliyya basiiṭa* this is a simple matter. *ɛamaliyyit it-tadriis di muqrifa* this teaching business is foul. 4 work done. *kull^{i} maktab bi-yibɛat il-ɛamaliyya l-qism il-muragɛa* each office sends the completed work to the checking department.

عمالة *ɛimaala* /n/ employment. *ɛimaala kamla* full employment.

عمولة *ɛumuula* 1 /n pl *-aat*/ commission, percentage. *ʃil-muntigiin bi-yiddu ɛumuula lil-bayyaɛiin* the producers give a commission to the salesmen. *ʃil-bank^{i} b-yaaxud ɛumuula ɛala kull^{i} sulfa* the bank takes a commission on every loan. 2 /adj invar/ well-made by a fine craftsman (particularly of furniture). *karaasi ɛumuula* chairs fashioned by a master carpenter.

عميل *ɛamiil* /n pl *ɛumala*/ 1 client, customer. 2 agent.

عمّال *ɛammaal* 1 /fem *ɛammaala*, pl *ɛammaliin*/ modal of continuation. *qalb-i ɛammaal yitaktik* my heart keeps on ticking. *ʃil-balaawi ɛammaala titḥaddif ɛaleena* disasters keep on befalling us. *ɛammaliin yiʃtaɣalu* they keep on working. *ɛammaal-ak tuḥṣud ɛidaan il-qamḥ* you continue to harvest the wheat stalks. *naazil ɛal-ḥalla ɛammaal yaakul* he's busy stuffing himself from the pot. 2 /adv/: *ɛammaal ɛala baṭṭaal* incessantly and to no purpose, as in *bi-yaakul ɛammaal ɛala baṭṭaal* he eats all the time, whether hungry or not.

معمل *maɛmal* /n pl *maɛaamil*/ 1 laboratory. ‖*maɛmal tafriix* incubator for chicks. 2 factory, workshop.

اتعمل *ʃitɛamal* /vi/ passive of *ɛamal*. -iva *mitɛimil*.

انعمل *ʃinɛamal* = *ʃitɛamal*. -iva *minɛimil*.

عمّل *ɛammil* /vi/ to suppurate, produce pus. *ʃidhin-ha marham lamma tɛammil* put ointment on it until it comes to a head. -vn *taɛmiil*; ava *miɛammil*.

عامل *ɛaamil^{2}* /vt/ 1 to treat, deal with. *ma-yiɛraf-ʃ^{i} yiɛaamil in-naas* he doesn't know how to treat people. ‖*bi-yɛaamil rabb-i-na* he has principles. *ʃilli bi-yɛaamil bi-yɛaamil rabb-i-na* ≈ do unto others as you would do unto God. 2 to transact business with. *b-aɛaamil tuggaar ig-gumla* I deal with the wholesale merchants. *muɛamlit-u zayy id-dahab* he is scrupulously honest, he pays on the nail. -vn *muɛamla*; ava *miɛaamil*.

معاملة *muɛamla* /n/ 1 treatment. *muɛamla xaṣṣa* special treatment. 2 hard cash, currency. — /pl *-aat*/ 3 transaction. *ʃiʃ-ʃirka liiha muɛamlaat fil-xaarig* the company has dealings abroad.

اتعامل *ʃitɛaamil* /vi/ 1 to manage, conduct oneself (in relation to another). *baqa miʃ ɛarfa titɛamli maɛa l-xaddaama* you mean you can't cope with the maid? *ʃil-muwaẓẓaf laazim yiɛraf yitɛaamil maɛa g-gumhuur* the official has to know how to deal with the public. 2 to transact business. *kaanit in-naas bi-titɛaamil bil-mubadla* people used to do business by barter. *bi-yitɛaamil maɛa n-naas biʃ-ʃaraf* his word is his bond. -vn *taɛaamul*; ava *mitɛaamil*.

استعمل *ʃistaɛmil* /vt/ to use, employ. *bi-nistaɛmil ʃanwaaɛ kitiir min il-waraq* we use many kinds of paper. -/the literary passive form occurs in unelevated speech/ *ʃil-ɣazaat istuɛmilat fil-ḥarb* gases were used in the war. -vn *ʃistiɛmaal*; ava *mustaɛmil*; ava/pva *mistaɛmil*; pva *mustaɛmal*.

استعمال *ʃistiɛmaal* /n pl *-aat*/ 1 use. *kull^{a} ḥaaga liiha stiɛmaal muɛayyan* everything has a particular use. 2 linguistic usage.

مستعمل *mustaɛmal* /adj/ used, second-hand. *ɛarabiyyaat mustaɛmala* used cars.

ع م ل ق

عملاق *ɛimlaaqˆ* /n pl *ɛamaaliqa*/ giant.

ع م م

عمّ *ɛamm^{1} (i, u)* 1 /vt/ to pervade, prevail over. 2 /vi/ to become general or prevalent or common, spread, prevail. *ʃil-balwa bi-tɛimm^{i} wir-raḥma bi-txuṣṣ [prov]* calamities overtake (everyone) but acts of mercy are only enjoyed by the few. - vn *ɛamamaan, ɛumuum*; ava *ɛaamim*.

عموم *ɛumuum* /n/ generality. *ʃil-ɛidda lli b-yistaɛmiluu-ha ɛumuum il-kahraba ʃiyya* the equipment which the general run of electricians use. ‖*ɛal-ɛumuum* or *ɛala l-ɛumuum* anyway, in any case, as in *ɛal-ɛumuum ma-fii-ʃ daaɛi lil-munaqʃa dilwaqti* anyway, there is no point in arguing now.

¶ *ɛumuuman* /adv/ (1) generally, in general. *ḥa-nitkallim ɛumuuman wi-bit-tafaṣiil* we will speak generally and in detail. (2) generally, usually. *ʃiṭ-ṭalaba ɛumuuman bi-ygiibu k-kutub min il-madrasa nafs-a-ha* the students generally get the books from the school itself.

عمومى *ɛumuumi* 1 /adj */ general, usual, main. *maxzan ɛumuumi* general warehouse. *ʃil-baab il-ɛumuumi* the public entrance. *ʃaariɛ ɛumuumi* main road. 2 /adv/ generally, in the usual way. *ʃis-siluuk lli gayya ɛumuumi lil-mutoor* the wires that come in the normal way to the motor.

عامّ *ɛaam^{1}, ɛamm^{2}, ɛaamm* /adj */ 1 general, overall. *ʃil-qiyaada l-ɛamma* general headquarters. *ʃil-qaaʃid il-ɛaamm* the Commander-in-Chief. *fil-ɣaalib il-ɛaam* in most cases. 2 public. *ʃil-maṣlaḥa il-ɛamma* the public

interest. *muḥaḍra ɛamma* public lecture. *ʔil-qiṭaaɛ il-ɛaamm* the public sector (of the economy).

عامّة *ɛamma*[1], *ɛaamma* /n/ generality. *ɛammit if-faɛb* the general public. *xalla t-taɛliim lil-ɛamma baɛd*[i] *ma kaan lil-xaṣṣa* he made education available to everyone after it had been only for the privileged.

عامّي *ɛammi* /adj * and pl *ɛawaamm*/ illiterate. *ʔir-raagil il-ɛammi wil-mutaɛallim* the illiterate man and the educated. ‖*(ʔil-luva) l-ɛammiyya* the vernacular language.

العوامّ *ʔil-ɛawaamm* /pl n/ the common people.

أعمّ *ʔaɛamm* /el/ **1** more/most general. **2** more/most widespread.

عمّم *ɛammim*[1] /vt/ to propagate, make widespread. -vn *taɛmiim*; ava/pva *miɛammim*.

اتعمّم *ʔitɛammim*[1] /vi/ **1** to be or become propagated, become or be made widespread. *ʔil-fikra tɛammimit* the idea gained currency. **2** to be or become generalized. -iva *mitɛammim*.

ع م م[2]

عمّ *ɛamm*[3] /n/ **1a** /pl *ʔaɛmaam*/ paternal uncle. **1b** title of, and form of address and reference to, a man treated as an uncle. *ma-tqulii-ʃ lu ya ɛamm-i - ʔinti ḥa-tkabbarii qabl il-ʔawaan* don't call him 'Uncle'; you'll make him old before his time! **2a** respectful title of, and form of address and reference to, a man (usually) older than the speaker and of the lower social classes. *ʔil-quuṭa b-kaam ya ɛamm* how much are your tomatoes, Uncle? *ʃuft*[a] *ɛamm*[i] *makki l-bawwaab* have you seen Uncle Makki the doorman about? **2b** informal term of address to a male ≈ mate, buddy. *ɛala feen ya ɛamm* where to, mate? *da kalaam ya ɛamm* is that any way to behave, buddy?

عمّة *ɛamma*[2] /n pl *-aat*/ paternal aunt.

ع م م[3]

عمّة *ɛimma* /n pl *ɛimam*/ **1** headgear consisting of a skullcap or tarbush wound around with a length of fine white cotton cloth to form a turban (see Pl.F, 12). ‖*tikabbar ɛimmit-na* you make us proud. **2** moulded black felt hat worn by Coptic clergy. ‖*ḥa-yilbis il-ɛimma* he is going to be ordained.

عمامة *ɛimaama* /n pl *ɛamaayim*/ turban.

عمّم *ɛammim*[2] /vt/ **1** to make (a *ɛimma*) by winding a white cloth around a skullcap or tarbush. **2** to dress (s.o.) in a *ɛimma*. -vn *taɛmiim*; ava/pva *miɛammim*.

اتعمّم *ʔitɛammim*[2] /vi/ to put on a turban. -ava *mitɛammim*.

ع م ن و

عامنوّل *ɛamnawwil* /adv/ last year. *ʔawwil ɛamnawwil* the year before last.

ع م ى

عمى *ɛimi (i)* /vi/ to become blind. ‖*sikir lamma ɛimi* he got blind drunk. -vn *ɛama*; ava *ɛamyaan*.

عمى *ɛama*[1] *(i)* /vt/ to blind. *rabb-i-na yihdii-k wi-yiɛmi ɛeen-ak ɛan il-ḥaraam* God guide you and close your eyes to evil. *ʔid-duxxaan il-qurayyib yiɛmi [prov]* ≈ smoke gets in your eyes (objectivity is impossible when one's emotions are involved). -vn *ɛamayaan*; ava *ɛaami*; pva *maɛmi*.

عمى *ɛama*[2] /n/ blindness. ‖*ʔil-ɛama ya badr [prov]* blindness, O moon! (said of one who is blind to the radiantly obvious). *-ma-yiɛraf-ʃ is-sama mil-ɛama [prov]* ≈ he can't tell black from white. *-ḥa-taxud-ni ɛala ɛamaa-ya* are you going to take advantage of my ignorance? *-ḥilt-u l-ɛama l-ʔazraq* he's stony broke.

عميان *ɛamyaan* /adj */ **1** blind. **2** ignorant, unaware. — /adv/ **3** dazed. *daxal il-beet ɛamyaan* he went into the house not knowing where he was.

عميانى *ɛimyaani* /adv/ blindly, without looking, without knowing.

أعمى *ʔaɛma* /adj, fem *ɛamya, ɛamyaaʔ*, pl *ɛumy, ɛimyaan*/ blind. *ṭaaɛa ɛamyaaʔ* blind obedience. ‖*ʔeeʃ ɣaraq il-ʔaɛma qaal quffit ɛiyuun [prov]* what could a blind man want more than a basketful of eyes? (said when something longed for is offered). *-xamsa saaɣ ɛumy* a measly five piastres. *talaata gneeh ɛumy* a measly three pounds.

اتعمى *ʔitɛama* /vi/ passive of *ɛama*. -iva *mitɛimi*.

اتعامى *ʔitɛaama* /vi/ **1** to pretend to be blind. **2** to pretend not to notice, turn a blind eye. -ava *mitɛaami*.

استعمى *ʔistaɛma* /vt/ **1** to select for blindness. **2** to consider (too) weak sighted. — /vi/ **3** to feign blindness, act like a blind man. -ava *mistaɛmi*.

ع م ي و

عميو *ɛamyu* /n/ style of serving in the game of *xara* (q.v.).

ع ن

عن *ɛan* /w pron suff: *ɛanni, ɛannak, ɛannik, ɛannu, ɛanha/ɛannaha, ɛanna/ɛannina, ɛanku(m)/ ɛannuku(m), ɛanhum/ ɛannuhum/* preposition indicating **1** object of concern. *kitaab ɛan faransa* a book about France. *ɛandak ʔayy*[i] *fikra ɛan il-ʔiwaq* do you have any idea about the rooms? *kalam-kum ɛan miraat-i laazim yintihi* your gossip about my wife must

stop. **2** distance or separation. *ʃinta qaaʕid biʕiid ʕanni leeh* why are you sitting apart from me? *kaanit tayha ʕan baal-i* it had slipped my mind. *ʃahu nzaaḥ ʕanni* well, he's off my back! *ʃana m-axrug-ʃ*^{i} *ʕan ṭooʕ-ak ʃabadan* I'll never disobey you. ‖*xud ʕannu ʃ-ʃanṭa* relieve him of the bag! take the bag off him! - *(xalli* or *haat) ʕannak* let me take that for you, let me do that for you. **3** comparative relationship. *ʃil-ʕilba di kbiira ʕan di* this box is larger than that. *miʃ ḥa-traxxaṣ-ha ʕan kida ʃwayya* won't you make it a bit cheaper than that? *ʃil-waram bi-yxiff*^{i} *yoom ʕan yoom* the swelling gets better every day. **4** basis, source, authority. *ʕan miin ik-kalaam da* on whose authority is that said? *maktuub ʕan yadd*^{i} *waaḥid muḥaami* written under the hand of a lawyer. *ʃana wafiqt*^{a} *ʕan ʃiqtinaaʕ* I agreed out of conviction. *ma-b-yikkallimuu-ʃ ʕan ʕilm* they don't speak from actual knowledge. ‖*ʕan ʃizn-ak* by your leave. - *ʕan ṭariiq* by way of, via. **5** location in relation to a fixed point. *ʕan ʃimaal-u waaḥid wi-ʕan yimiin-u waaḥid taani* on his left there's one and on his right there's another.

¶ *wi-ʕanha wi-* thereupon, right then, as in *ʃatam-ni qumt*^{i} *raadid ʕalee fa-ziʕil baqa w-ʕanha w-raaḥ rafid-ni* he insulted me so I answered him back; then he got offended and fired me then and there. - *ʕan(nu) ma-..* who the hell cares if (he) does not ..., as in *ʕannak ma-ruḥt* who the hell cares if you don't go?

ع ن ب

عنب *ʕinab* **1** /coll n/ **1a** grape(s). *ʕinab id-diib* (or *it-taʕlab*) gooseberries. **1b** grape vine. *waraq ʕinab* vine leaves. **2** /adj invar/ luscious.

عِنبة *ʕinaba* /unit n, pl *-aat*/ **1** a grape. **2** a vine.

عِنّاب *ʕinnaab* /coll n/ jujube(s).

عِنّابة *ʕinnaaba* /unit n, pl *-aat*/ a jujube.

عنّابي *ʕinnaabi* /adj invar/ reddish-brown.

ع ن ب ر [1]

عنبر *ʕanbar*[1], *ʕambar*[1] /n/ ambergris (used in particular as an aphrodisiac).

عنبري *ʕanbari* /n pl *ʕanabra*/ pigeon of a reddish-brown breed.

(ع ن ب ر) [2]

عنبر *ʕanbar*[2], *ʕambar*[2] <T *ambar*> /n pl *ʕanaabir*/ **1** large hall or shed (as in a factory or works). **2** hospital ward. **3** hold (of a ship). ‖*ʕambar ir-rukkaab [naut]* steerage. **4** block (as in a barracks or prison).

عنبر *ʕambar*[3]: *ʃambar wi-ʕambar* see *ʃambar*[4].

ع ن ت

اتعنّت *ʃitʕannit* /vi/ to be stubborn, be difficult. - ava *mitʕannit*.

تعنّت *taʕannut* /n/ pig-headedness, stubbornness.

ع ن ت ب

عنتبلي *ʕantabli* /prop n/ *[obsol]* **1** brand name for a type of water-pipe tobacco. **2** (any type of) *miʕassil*.

ع ن ت ر

عنتر *ʕantar* /prop n/ Antar (in full, *ʕantar ibn*^{i} *ʃaddaad)*, a hero of folk epic. *ḥ-aʕmil ʕamaayil ma-ʕamal-haaʃ ʕantar* I shall do deeds such as even Antar never did! I shall amaze you all!

عنتري *ʕantari* /n/ *[rur, obsol]* vest similar to a *sideeri* (q.v.) with long tight sleeves.

ع ن ت ل

عنتل *ʕantal* /vt/ to complicate. *ma-tʕantal-haa-ʃ* don't complicate matters! - vn *ʕantala*; ava/pva *miʕantal*.

عنتيل *ʕantiil* /n pl *ʕanatla*/ veteran.

ع ن ج ر

عنجر *ʕangar* /vt/ to set (a hat) at an angle on the side of one's head. - vn *ʕangara*; ava/pva *miʕangar*.

اتعنجر *ʃitʕangar* /vi/ passive of *ʕangar*. - iva *mitʕangar*.

ع ن ج ه

عنجهة *ʕangaha* /n/ conceit, self-importance.

عنجهيّة *ʕangahiyya* = *ʕangaha*.

اتعنجه *ʃitʕangah* /vi/ to act in a conceited manner, play the big-shot. - ava *mitʕangah*.

ع ن د [1]

عند *ʕand* preposition indicating **1** vicinity. *ḥa-ninzil ʕand il-maḥaṭṭa* we'll get out at the station. *daxalna ʕand*^{i} *fibbaak it-tazaakir* we went in by the ticket office. ‖*ʃistanna ʕandak* stay where you are! - *ʕandak* stop what you're doing! hold it! **2** place of residence, work or business. *ḥa-yitradda ʕandina bukra* he is going to have lunch at our house tomorrow. *lissa gayy*^{i} *min ʕand id-duktoor* (I've) just come from the doctor's. *ḥa-tlaaqi zabaadi ʕand*^{i} *ʃayy*^{i} *baqqaal* you can get yoghurt at any grocer's. **3** (approximate) time. *ʕand il-fagr* around dawn. *ʕand il-luzuum* when necessary. *ʕand il-ʃazamaat* in times of crisis. **4** accidentality. *ʕandu rigl*^{i} *ʃaṭwal mit-tanya* he has one leg longer than the other. *ʕandaha l-qalb* she has a bad heart. *ʕandi ṣdaaʕ* I have a headache. *ʕandak kaam sana* how old are you? *ʕandu*

ʃahreen he is two months old. *ɛandi fikra ħilwa* I've got a good idea. *ɛanduhum ʃagaaza* they have a holiday. **5** ownership. *ɛandu ɛmarteen* he owns two apartment buildings. **6** present possession. *ma-ɛandii-ʃ fakka* I don't have any change. *ɛanduku ɛeeʃ* do you have any bread? *kull-u ɛand allaah* ≈ God knows all about it and will reward me (said, e.g., in response to ingratitude). *ʃiħna liina ɛandu gneeh* he owes us a pound. *ma-lak-ʃ*^{i} *ɛandi ħaaga* I don't owe you anything, I'm under no obligation to you. **7** opinion. *huwwa ɛandi zayy axuuya* I regard him as a brother. *ʃana ɛandi ma-ygii-ʃ xaaliş ʃaħsan* in my opinion it would be better for him not to come at all. *ʃabɣaq il-ħalaal ɛand allaah it-ṭalaaq* the most odious of the things God permits is divorce. *ma-gab-ʃ*^{i} *ħaaga min ɛandu* he added nothing of his own, he said nothing new. *ʃinta baqa ma-tgib-ʃ*^{i} *min ɛandak* (now that things have calmed down) don't you start making trouble! **8** association, community. *fikra miʃ maqbuula ɛand iʃ-ʃabaab* an idea unacceptable to young people. *dafn il-mawta ɛand il-ʃaqbaaṭ lii ṭariiqa xaşşa* among the Copts there are particular burial customs. *ɛandina fil-balad ṃa-ħadd*^{i}*-ʃ bi-yiɛmil kida* in the village I come from no one does that. **9** conformity. *ʃana ɛand*^{i} *waɛd-i* I abide by my promise.

ع ن د [2]

عند *ɛanad, ɛinid (i)* /vi/ to behave stubbornly. - vn *ɛind*; ava *ɛaanid*.

عند *ɛind* /n/ stubbornness, obstinacy. ‖ *bil-ɛind*^{i} *fi-...* out of spite towards, as in *wi-baɛdeen bil-ɛind*^{i} *fiyya bi-yḥibb il-bint*^{i} *di* and what's more, just to spite me, he's fallen in love with that girl. - *ɛaamil bil-ɛind* he is acting perversely.

عندى *ɛinadi* /adj */ obstinate, stubborn.

عنيد *ɛaniid* /adj */ stubborn.

عاند *ɛaanid* **1** /vt/ to oppose stubbornly. *ʃiz-zaman miɛanid-ni* nothing goes my way. **2** /vi/ to act stubbornly. *ṭuul ɛumr-ak ʃinta mɛaanid kida* you've always been stubborn. - vn *ɛinaad, miɛanda*; ava *miɛaanid*.

اتعاند *ʃitɛaanid* /vi/ **1** to be opposed stubbornly. **2** to oppose one another. - ava/iva *mitɛaanid*.

ع ن د ل ب

عندليب *ɛandaliib* /n pl *ɛanaadil*/ nightingale. ‖ *ṣabaaḥ il-ɛandaliib* ≈ the top of the morning to you!

(ع ن ز)

عنزة *ɛanza* /n pl *-aat*/ she-goat. ‖ *bizz il-ɛanza* variety of white elongated grape.

عنز *ɛanaz* (also *ʃabu ɛanaz*) /coll n/ stork(s).

ع ن س

عانس *ɛaanis* /n pl *ɛawaanis*/ spinster.

ع ن ص ر [1]

عنصر *ɛunşur* /n pl *ɛanaaşir*/ element, factor. *ʃil-ɛanaaşir il-masʃuula ɛan nagaḥ-ha* the factors responsible for her success.

عنصرى *ɛunşuri* /adj/ racial. *naẓariyya ɛunşuriyya* a racial theory.

ع ن ص ر [2]

العنصرة *ʃil-ɛanşara* <Heb> /n/ *[Chr, Jud]* Pentecost.

ع ن ط ز

عنطزة *ɛanṭaza* /n/ arrogance, haughtiness.

عنطوز *ɛanṭuuz* /adj pl *ɛanaṭiiz*/ arrogant.

اتعنطز *ʃitɛanṭaz* /vi/ to behave in an arrogant or haughty fashion. - ava *mitɛanṭaz*.

ع ن ع ن

عنعنة *ɛanɛana* /n/ chain of transmission (of hadith or other moral traditions).

ع ن ف

عنف *ɛunf* /n/ violence, force.

عنيف *ɛaniif* /adj */ violent, severe.

عنف *ɛannif* /vt/ to rebuke severely. - vn *taɛniif*; ava/pva *miɛannif*.

اتعنف *ʃitɛannif* /vi/ to be severely rebuked. - iva *mitɛannif*.

ع ن ق

عنق *ɛinq* /n/ neck. *ḍarab-u f-ɛinq-u b-sikkiina* he stabbed him in the neck with a knife. *gat-ak wagaɛ ɛinq-ak [abus]* may your neck hurt! ‖ *ɛalee ɛinq*^{i} *raqaba* ≈ he has a neck like an ox. - *ɛinq*^{i} *ɛinab* a bunch of grapes. - *ɛinq iz-zirr* small protruding piece of felt to which the tassel is sewn on a fez.

عنق *ɛunuq*↑ /n pl *ʃaɛnaaq*/ neck. ‖ *ɛunuq ir-raḥim [anat]* the cervix.

عانق *ɛaaniq* /vt/ to embrace, clasp. - ava/pva *miɛaaniq*.

اتعانق *ʃitɛaaniq* /vi/ **1** to embrace one another. **2** to be embraced. - ava/iva *mitɛaaniq*.

ع ن ق ا ف

عنقافة *ɛinqaafa* /n pl *-aat*/ **1** neck. *ɛafaq-u min ɛinqaafit hiduum-u* he grabbed hold of him by the collar of his clothes. **2** neck-pad (of a yoke).

ع ن ق و د

عنقود *ɛanquud* /n pl *ɛanaqiid*/ bunch, cluster. *ɛanaqiid*

ʕinab bunches of grapes. ‖ *ʃaaxir il-ʕanquud* the last child born to a couple. *ʃaaxir il-ʕanquud sukkar maʕquud [prov]* (the youngest child is like concentrated sugar) ≈ the youngest child is the darling of his parents.

(ع ن ك ب)

عنكب *ʕankab* (also *ʕankab fidd^{i} wi-rkab*) /n/ a game in which a child mounted on another's shoulders tries (by kicking) to topple others similarly mounted.

عنكبوت *ʕankabuut* /n pl *-aat*/ spider. *beet il-ʕankabuut* spider's web.

^{1} ع ن و

عنوة *ʕinwa* /n/ force, violence, constraint.

¶ *ʕinwatan* /adv/ by force.

^{2} ع ن و see ع ن ى : *maʕnawi*

ع ن و ن

عنوان *ʕinwaan* (also *ʕilwaan*$^{\downarrow}$) /n pl *ʕanawiin*/ **1** address. *ʃil-gawaab yinʕirif min ʕinwaan-u [prov]* ≈ you can tell a book by its cover. **2a title (of a book).** **2b** caption (under a picture). **2c** headline.

عنون *ʕanwin* /vt/ **1** to address. *miʃ ħa-tʕanwin ig-gawaab* aren't you going to address the letter? **2** to entitle. *ʕanwin ik-karikateer bi-duun taʕliiq* he captioned the cartoon 'No comment'. - vn *ʕanwana*; ava/ pva *miʕanwin*.

اتعنون *ʃitʕanwin* /vi/ **1** to be addressed. **2** to be entitled. - iva *mitʕanwin*.

ع ن ى

عنى *ʕana*$^{\uparrow}$ *(i)* /vt/ to mean. *yaʕni ʃeeh* what does it mean? *ma-ʃaʕnii-ʃ ħadd^{i} biz-zaat* I don't mean to refer to any one in particular. - ava *ʕaani*; pva *maʕni*.

يعنى *yaʕni* particle signalling **1** the giving or requesting of clarification ≈ that's to say, that is, does that mean then (in a question). *ʃaawir ʕala buqq-u yaʕni raayiħ yitʁadda* he gestured to his mouth, meaning (that he was) going to lunch. *bi-ʃizn illaah yaʕni* God permitting, that is. *yaʕni ħa-taaxud il-ʃutubiis* you'll take the bus, then? ‖ *wi-ʃeeh yaʕni* so what! as in *ʃatamt il-mudiir - wi-ʃeeh yaʕni* so I insulted the manager - so what! **2** attempted clarification, when the speaker is groping for words ≈ y'know. *bass^{i} yaʕni kunt^{a} ʕaawiz ʃasʃal-ak suʃaal* but, y'know, I wanted to ask you a question. **3** a noncommittal response with implied reservation ≈ so-so, sort of. *ʃinta mabsuuṭ hina - yaʕni* 'Are you content here?' 'So-so.'

عناية *ʕinaaya* /n/ care, compassionate concern. *ʃil-ʕinaaya biṭ-ṭifl* baby care. *bi-faḍl^{i} ʕnayt-ak* thanks to your care. *baṣṣ-i-li b-ʕeen il-ʕinaaya* he looked at me compassionately.

معنى *maʕna* (also *maʕnit*$^{\downarrow}$ in constr) /n pl *maʕaani*/ meaning, significance. *maʕnaa-ha* (or *maʕnit-ha) ʃeeh di* what does this mean? *ʃid-dimuuʕ di maʕnaa-ha* (or *maʕnit-ha) ʃinnik xayfa* these tears mean that you're afraid. ‖ *bi-maʕna ʃinn*$^{\uparrow}$ which is to say that, as in *bi-maʕna ʃinn^{i} ʃiza ma-get-ʃ is-saaʕa sabʕa tiqdar tirawwaḥ* in other words, if I don't come at seven, you can go home. - *bi-maʕna ʃaaxar* in other words. - *bi-maʕna k-kilma* in the full meaning of the word, as in *da raagil bi-maʕna k-kilma* he's a real man. - *bi-maʕna ʃaṣaḥḥ* more correctly.

¶ *ʃil-laa-maʕna* meaninglessness.

معنى *maʕni* /adj */ involved, concerned, relevant. *ʃig-gihaat il-maʕniyya* the authorities concerned.

معنوى *maʕnawi* /adj/ ideational, abstract. ‖ *rooḥ maʕnawiyya* morale, spirit. - *ʃaxṣ^{i} maʕnawi [leg]* artificial or juristic person.

تعنية *taʕniyya, taʕniya* /n/ *[path]* tenesmus.

اتعنى *ʃitʕanna* /vi/ to suffer from tenesmus. - vn *taʕniyya, taʕniya*; ava *mitʕanni*.

عانى *ʕaana* /vi/ to suffer, feel distress. *ʃil-mugtamaʕ bi-yʕaani min takaddus ʃafraad-u* society is suffering because of the rise in population. - vn *muʕanaah*; ava *miʕaani*.

اعتنى *ʃiʕtana* /vi/ to take care, pay attention. *laazim ninaqqii-ha w-niʕtini bi-xtiyar-ha* we have to pick them out one by one and be very careful which we choose. *ʃiʕtini bil-qahwa* be sure you make the coffee properly! - vn *ʃiʕtina*; ava *miʕtini*.

استعنى *ʃistaʕna (yistaʕna)* /vi/ to care, show interest or concern. *fii duktoor tilaaqii ma-yistʕnaa-ʃ* you sometimes meet doctors who don't give a damn. *ma-yistaʕnaa-ʃ yibuṣṣ^{i} f-xilqit-ha* he wouldn't condescend to look at the likes of her. ‖ *qillit istiʕna* a devil-may-care attitude. - vn *ʃistiʕna*; ava *mistaʕni*.

ع ه د

عهد *ʕahd* /n pl *ʕuhuud*/ **1** era, age. *fi-ʕahd^{i} ʃaadam* in the days of Adam. ‖ *min ʕahd^{i} qurayyib* recently. **2** covenant, pact. ‖ *ʃil-ʕahd il-qadiim* the Old Testament. - *ʃil-ʕahd ig-gidiid* the New Testament. - *xamiis il-ʕahd [Chr]* Maundy Thursday. - *waaxid ʕahd^{a} ʕala nafs-u* he has committed himself. - *waaxid ʕahd* he has vowed allegiance to a leader of a Sufi order.

عهدة *ʕuhda* /n/ **1** custody, charge, responsibility. *bi-yḥuṭṭ il-ʕarabiyya f-ʕuhdit-i* he puts the car in my

charge. **2** /pl *ʕuhad*/ (item of) property in the charge of an official for which he must account on relinquishing his position.

معهد *maʕhad* /n pl *maʕaahid*/ institute. *ʃil-maʕhad il-ʕaali lit-tarbiya r-riyaḍiyya* the Higher Institute for Athletic Training.

اتعهّد *ʃitʕahhid* /vt/ to undertake, contract. *ʃitʕahhidt^{i} (ʃinni) ʃaraggaʕ-lu l-ʕarabiyya s-saaʕa talaata* I undertook to return the car to him at three. - vn *taʕahhud*; ava *mitʕahhid*.

تعهّد *taʕahhud* /n pl *-aat*/ formal undertaking, pledge. *naaxud ʕalee taʕahhud* we get a formal undertaking from him.

متعهّد *mutaʕahhid* /n */ one contracted to supply specific items.

معاهدة *muʕahda* /n pl *-aat*/ treaty, convention.

اتعاهد *ʃitʕaahid* /vi/ to come to an agreement, make a pact. *ʃitʕahdu ma-yxunuu-ʃ baʕḍ* they agreed not to betray one another. - ava *mitʕaahid*.

ع و ا ف see ع ف ى : *ʕawaaf, ʕawaafi, ʃil-ʕawaafi*

ع و ج

عوج *ʕawag (i)* /vt/ **1** to make crooked, twist, bend. *tuql ik-kutub ʕawag rigl it-ṭarabeeza* the weight of the books bent the table leg. *ʃil-ʃaks^{i} maʕwuug* the axle is bent. ‖ *ʃil-maʕwuug yistaʕdil ʕas-sindaal [prov]* (the crooked may be straightened on the anvil) ≈ nothing is so bad it cannot be set right. **2** to set crookedly, tip, tilt. *ʕaawig ṭarbuuʃ-u* wearing his fez at a jaunty angle. - vn *ʕawag, ʕawga, ʕawagaan*; ava *ʕaawig*; pva *maʕwuug*.

معوج *maʕwuug* /adj */ **1** crooked, bent, twisted. *ʃinti labsa l-burneeṭa maʕwuuga* you're wearing the hat crooked. ‖ *ʃinta maʕwuug ʕala ʃeeh* why are you so conceited. **2** loose, immoral. *bint^{i} maʕwuuga* a loose girl.

أعوج *ʃaʕwag* /adj, fem *ʕooga*, pl *ʕuug*/ **1** crooked, twisted, bent. ‖ *ʃil-bint^{a} ḥal-ha ʃaʕwag* (1) she's a loose girl. (2) the girl has bad luck. **2** immoral. *taṣarrufaat ʕooga* crooked behaviour. - /adverbially/ *miʃi ʃaʕwag* to behave immorally.

عويجة *ʕiweega: dura ʕweega* sorghum, Indian millet (Andropogon sorghum).

اتعوج *ʃitʕawag* /vi/ **1** to be made crooked, twisted or bent. **2** to be set crookedly, be tilted. **3** to be offended. *ʃinta mitʕiwig minni leeh* why do you have this standoffish attitude towards me. - ava/iva *mitʕiwig*.

انعوج *ʃinʕawag* = *ʃitʕawag*. - iva *minʕiwig*.

معوّج *miʕawwig* /adj/ crooked or twisted or bent in several places.

اتعوّج *ʃitʕawwig* /vi/ to be made crooked, be bent, be twisted (in several places, or several times). *ʃil-ʕaḍiib itʕawwig* the bar buckled. ‖ *ma-lha maʃya b-titʕawwig kida* what makes her walk so provocatively? why does she wiggle herself about like that? - *bi-titʕawwig fi-kalam-ha* she talks in a coquettish and provocative way. - iva *mitʕawwig*.

ع و د

عاد *ʕaad^{1} (u)* /vt/ **1** to cause (times, conditions) to be repeated (of God). *rabb-i-na yʕud-ha ʕaleekum bi-xeer* may Our Lord bring back (these happy days) to you with bounty! (response to *bi-ʕooda*). — /vi/ **2a** to recur (of times, conditions). ‖ *bi-ʕooda* or *bi-ʕoodit il-ʃayyaam* may it (or the days) be repeated! many happy returns! (a felicitation given on any happy occasion). **2 b**↑ to return (of people). *ḥa-nʕuud fi-nuṣṣ il-leel* we'll return at midnight. **3** /w neg/ to continue, remain. *ʃin-naas ma-ʕad-ʃ^{i} fiihum xeer* there's no longer any good in people. *ma-ʕad-lak-ʃ^{i} ḥigga* you have no argument left. *ma-ʕudt^{i}-ʃ faaḍi* I no longer have any free time. **4** /preverb/ **4a** /w neg/ to continue to. *ʃil-beet ma-ʕad-ʃ^{i} ysaʕ-na* the house is no longer large enough for us. *miʃ ḥa-yʕuud yiṣlaḥ liʃ-ʃuɣl* it won't be fit for work any more. **4b** to start (again) to. *kull^{i} ma yifrigu ʕannu yʕuud yisraq taani* every time they release him he goes back to stealing. *kull^{i} ma yxiff^{i} yʕuud yiʕya taani* whenever he gets well he falls sick again. *law ʕudt atʕaamil biʃ-ʃikaat taani* if I ever dealt with cheques again .... ‖ *ma-ʕudt^{i}-ʃ ʃaqul-ha* (also *ma-ʕunt^{i}-ʃ ʃaqul-ha*) I won't say it again! - *ʃin ʕudt^{i} tʕuud ḥuṭṭ^{i} fiiha ʕuud* ≈ (let me off this time but) if I ever do it again you can punish me any way you like. - vn *ʕawda, ʕooda, ʕawadaan*; ava *ʕaayid*.

¶ *ʕaad ʕala* to bring returns, reflect upon. *ʃil-xusaara ḥa-tʕuud ʕaleena kull-i-na* the loss will touch us all. *ḥa-yʕuud ʕaleena bil-fayda* it will benefit us. *ʃil-ḥikaaya di miʃ ḥa-tʕuud ʕaleena ɣeer bit-taʕab* this affair will bring us nothing but trouble.

عاد *ʕaad^{2} (i)* /vt/ to redo, do again. *ʃil-muhandis yiʕiid it-tasgiil* the engineer does the recording again. *xalleet-u yʕiid kull it-tamariin* I made him do all the exercises again. *laazim ʃaʕiid is-sana* I'll have to repeat the year (at school or university). - vn *ʕiyaada*; ava *ʕaayid*.

¶ *ʕaad ʕala* to go over again. *ʕiid ʕal-xiyaaṭa bil-makana* go over the stitching by machine.

عودة *ʕawda* /n/ return. *tazkara zihaab wi-ʕawda* return ticket, round-trip ticket. ‖ *ʕawdit ir-rooḥ* reincarnation. - *nuqṭit il-la-ʕawda* the point of no return.

عودة *ʕooda* /n/ return. ‖ *bi-ʕooda* or *bi-ʕoodit il-*

ʕayyaam may it (or the days) be repeated! (a felicitation given on any happy occasion).

عائد ʕaaʕid, ʕaayid /n/ (financial) return, take. ʕaaʕid il-muʔallif the author's royalties. ʕawaaʕid in-naft oil revenues.

عوايد، عوائد ʕawaayid /pl n/ rates, taxes assessed on property for local purposes.

عادة ʕaada[2] /n/ **1** /pl -aat, ʕawaayid/ **1a habit**, usual practice. *kasal-ha baqa ʕaada* her laziness became a habit. *di miʃ ʕawayd-u* that's not his usual behaviour. *zayy il-ʕaada* as usual. ‖*fil-ʕaada* usually. - *ʔil-ʕaada s-sirriyya [euphem]* masturbation. **1b** custom, tradition. *ʕadaat maṣriyya* Egyptian customs. **2** *ʔil-ʕaada* the monthly period, the menses. *ʕaleeha l-ʕaada* she's having her period. **3** *ʔil-ʕaada* the simplest form of Egyptian backgammon. — /adj invar/ **4** standard, made to standard specifications. *zeet ʕaada* standard oil. *muftaaḥ ʕaada* a standard switch. *ʕaawiz birwaaz midahhab walla ʕaada* do you want a gilt or a standard frame?

¶ *ʕaadatan* /adv/ usually, ordinarily. *ʕaadatan bi-yilbis banṭaloon* he usually wears trousers.

عادى ʕaadi /adj */ ordinary, normal. *waraq ʕaadi* ordinary paper. - /adverbially/ *ruḥt if-furl[a] ʕaadi* I went to work as usual. *ʔis-sittaat bi-yilbisu ʕaadi* the women wear ordinary clothes.

عود ʕuud /n pl ʕidaan, ʔaʕwaad/ **1** rod, stick, pole, beam. *ʕuud kabriit* match-stick. *ʕuud miqaffa* broom-handle. *ʕuud ʃaduuf* rocker beam of a shadoof. *ʕidaan markib* ribs of a boat. **2** stalk, stem. *bi-niqṭaʕ ik-kizaan mil-ʕuud* we cut the ears from the stalk. *ʕuud quṭn* a (single) cotton plant. ‖ *ʔixḍarr[i] ʕud-ha* ≈ she blossomed. - *ʕuud fi-ḥizma* ≈ a drop in the ocean. - *ʕuud iṣ-ṣaliib [Chr]* the cross (of Christ). **3** musical instrument related to the lute, oud (see Pl.J, 7). — /no pl/ **4** aloes wood.

عيد ʕiid /n pl ʔaʕyaad/ feast, festival. *ʕiid milaad* birthday. ‖ *ʔil-ʕiid iṣ-ṣuɣayyar* (1) *[Isl]* Lesser Bairam, three-day festival marking the end of the Ramadan fast, starting on the first day of Shawwal. (2) *[Chr]* Christmas. - *ʔil-ʕiid ik-kibiir* (1) *[Isl]* Greater Bairam, four-day festival starting on the tenth day of Zu l-Higga marking the completion of the essential rites of pilgrimage to Mecca. (2) *[Chr]* Easter. - *ʕiid il-ʔumm* Mother's Day.

عيديّة ʕidiyya /n pl -aat/ present (of money) given at an annually celebrated feast or festival.

عيادة ʕiyaada, ʕiyyaada /n pl -aat/ outpatient clinic, doctor's surgery.

عوّاد ʕawwaad /n */ oud player.

اتعاد ʔitʕaad /vi/ to be done again, be done another time, be repeated. *ʔil-imtiḥaan ḥa-yitʕaad min taani* the exam will be done over again. *xiṭṭa mubtakra la tʕaadit wala nkaʃafit* an original plan that has never been done before or thought of. *ʔilli ḥaṣal la yitqaal wala yitʕaad* what happened (is so improper that it) is not to be mentioned or repeated. - iva *mitʕaad*.

انعاد ʔinʕaad = ʔitʕaad. - iva *minʕaad*.

عوّد ʕawwid **1** /vt/ to accustom. *laazim tiʕawwid iṭ-ṭifl[a] ʕala ʔinnu yilʕab li-waḥd-u* you have to get the child used to playing on his own. *ʕawwidnaa ʕala ʃ-ʃuɣl* we got him accustomed to the job. **2** /vi/ to return, go back. *ḥa-yʕawwid min feen* by which route will he return? - vn *taʕwiid*; ava/pva *miʕawwid*.

عيّد ʕayyid /vi/ **1** to celebrate a *ʕiid*. *leeh ʕayyidt[i] l-waḥd-ak* why did you spend the festival by yourself? **2** to give a festive greeting. *ʔin-naas ʕayyidit ʕala baʕḍ* (1) the people gave one another festive greetings. (2) the people visited each other on the occasion of the feast. - vn *taʕyiid*; ava *miʕayyid*.

اتعوّد ʔitʕawwid /vt and vi/ to become accustomed (to). *ʔana tʕawwidt[a] (ʕala) l-wiḥda* I've got used to being alone. - vn *taʕawwud*↑; ava *mitʕawwid*.

اتعيّد ʔitʕayyid /vi/ (impersonal) passive of *ʕayyid*. *dool naas yitʕayyid maʕaahum* is this the sort of people one spends a feast with? - iva *mitʕayyid*.

عاود ʕaawid **1** /vi/ to recur (of an illness). *ʕaawid ʕalayya l-maɣaṣ* I had a recurrence of the colic. **2** /vt/ to start (doing s.th.) again. *baʕdeen yiʕaawid ir-raami ḥaʃw il-bunduqiyya* then the marksman reloads the rifle. - vn *miʕawda*; ava *miʕaawid*.

معايدة muʕayda /n pl -aat/ festival greetings. *kart[i] mʕayda* greetings card.

أعاد ʔaʕaad↑ /vt/ **1** to cause (times, conditions) to be repeated (of God). **2** to re-do, do again. - vn *ʔiʕaada*/ ava *muʕiid*.

أعد ʔaʕid /interj/ encore!

إعادة ʔiʕaada /n/ repetition. ‖ *ʔiʕaadit ...* re- (in compounds), as in *ʔiʕaadit naẓar* reconsideration. *ʔiʕaadit xarṭ* relathing.

معيد muʕiid /n */ *[acad]* demonstrator, teaching assistant.

اعتاد ʔiʕtaad /vi/ to become accustomed. *ʔiʕtaad yizur-na yawmiyyan* he grew accustomed to visiting us daily. - vn *ʔiʕtiyaad*; ava *miʕtaad*.

اعتيادى ʔiʕtiyaadi /adj/ normal, customary.

معتاد muʕtaad adj */ accustomed to, in the habit of (doing s.th.). *hiyya muʕtaada tiʕmil ḥafla ʕala raas is-sana* she's in the habit of giving a New Year's party.

¶ *muɛtaadan* /interj/: *muɛtaadan marf [mil]* ready, march!

ع و ذ see ² ع و ز

¹ ع و ر

عور *ɛiwir (a)* /vi/ to lose an eye, lose the sight of one eye. - vn *ɛawar*.

عور *ɛawar (i)* /vt/ to cause to lose an eye: *ḍarab-u ɛawar-u* or (*ɛawar ɛeen-u*) he hit him and put out his eye. - vn *ɛawaraan*; ava *ɛaawir*; pva *maɛwuur*.

أعور *ʕaɛwar* /adj, fem *ɛoora*, pl *ɛuur*/ one-eyed. *yiquul lil-ʕaɛwar ʕaɛwar fi-ɛeen-u [prov]* ≈ to tell the plain truth, call a spade a spade. ‖*muṣraan ʕaɛwar* (vermiform) appendix (of the caecum). - *ʕitneen ɛuur* (1) throw in the game of *ṭaab* (q.v.) that neither wins nor loses. (2) a neutral action, an action without effect on an outcome.

عوّر *ɛawwar* /vt/ to injure, damage. - vn *taɛwiir*; ava/ pva *miɛawwar*.

تعويرة *taɛwiira* /inst n, pl *-aat*/ a wound, an injury.

اتعوّر *ʕitɛawwar* /vi/ to be injured, be damaged. - iva *mitɛawwar*.

اعورّ *ʕiɛwarr* /vi/ to lose an eye, lose the sight of one eye. - ava *miɛwirr*.

² ع و ر see also ¹ ع ى ر

عورة *ɛawra* /n pl *-aat*/ **1** *[Isl]* part of the body which must be covered during prayer. **2** genitals, pudenda. **3** shameful thing.

¹ ع و ز

عاز *ɛaaz (u)* /vt/ **1a** to want, desire. *ɛaaz xamsa saar ʕiddet-haa-lu* he wanted five piastres, (so) I gave it to him. *ʕis-sitt[a] ɛawzaa-ki f-kilmiteen* the lady would like a word with you. **1b** /preverb/ to want to. *lamma ʕaɛuuz ʕaḥlaq daqn-i ʕaruuḥ lil-ḥallaaq* when I want to get a shave, I go to the barber. **2a** to require, need. *ʕis-sibaaḥa bi-tɛuuz ʃiddit il-gism* swimming requires bodily strength. *ʕil-kawitf[a] ɛaayiz liḥaam* the tyre needs mending. ‖ *ʕil-ɛaayiz ʕahbal* ≈ necessity knows no law. **2b** /preverb/ to need to. *ʕil-ɛarabiyya tɛuuz titmawwin* the car needs filling up. - vn *ɛooza, ɛaaza*; ava *ɛaawiz, ɛaayiz*.

عوزة *ɛooza* /n/ want, need. *waqt il-ɛooza* in time of need, when necessary.

عازة *ɛaaza* /n/ want, need. *ma-luu-ʃ ɛaaza* it is not needed.

عايز، عاوز *ɛaayiz* or *ɛaawiz* /fem *ɛayza, ɛawza*, pl *ɛayziin, ɛawziin*/ **1** modal of desire. *ʕil-mudiir ɛaayiz yikallim-ak* the director wants to speak with you. **2** modal of necessity. *ʕil-ɛarabiyya ɛayza titṣallaḥ* the car needs to be repaired.

² ع و ز

أعوذ *ʕaɛuuzu: ʕaɛuuzu bi-llaah* (I seek refuge with God!) ≈ God protect us! Heaven help us! *ḥamaat-i gayya tzur-na. - ʕaɛuuzu bi-llaah* 'My mother-in-law is coming to see us.' 'Heaven help us!'

العياذ *ʕil-ɛiyaazu: ʕil-ɛiyaazu bi-llaah* (refuge is with God!) ≈ God protect us! Heaven help us! *ʕit-tadxiin bi-ygiib - wil-ɛiyaazu bi-llaah - saraṭaan* smoking, God protect us, causes cancer.

استعاذ *ʕistaɛaaz* /vi/ to seek refuge (in God). *ʕistaɛaaz bi-llaah* to say *ʕaɛuuzu bi-llaah*. - vn *ʕistiɛaaza*; ava *mistiɛiiz*.

¹ ع و ص

عاص *ɛaaṣ (u)* /vt/ to smear. *ɛaṣuu-li ʕiday-ya ḥibr[i] w-xatamuu-hum ɛala waraɛa* they smeared my hands with ink and took their impression on a piece of paper. - vn *ɛooṣ*; ava *ɛaayiṣ*.

اتعاص *ʕitɛaaṣ* /vi/ to be smeared. - iva *mitɛaaṣ*.

انعاص *ʕinɛaaṣ* = *ʕitɛaaṣ*. - iva *minɛaaṣ*.

² ع و ص

عويص *ɛawiiṣ* /adj */ difficult. *muʃkila ɛawiiṣa* a difficult problem.

ع و ض

عوض *ɛawaḍ* /n/ **1** substitute, compensation. *ʕil-ɛawaḍ ɛala l-mawla* or *ɛaleeh il-ɛawaḍ wi-minnu l-ɛawaḍ* or *ɛaleek il-ɛawaḍ ya rabb* ≈ God will provide (said upon suffering loss). ‖*ɛaleena l-ɛawaḍ* ≈ we're done for! **2** offspring, children.

عواض *ɛuwaaḍ* /prep/ instead of, in place of, as a substitute for. *ɛuwaaḍak* in your place. *xud da ɛuwaaḍ da* take this instead of that.

¶ *ɛuwaaḍ ma* /conj/ instead of (doing s.th.).

عوّض *ɛawwaḍ* /vt/ **1** to compensate (s.o.). *ʕil-ḥukuuma ɛawwaḍit-hum ɛal-ʕarḍ illi xadit-ha* the government compensated them for the land it took. **2** to compensate for (s.th.), make up for (s.th.). *laazim tiɛawwaḍ illi faat* you have to make up for the past. *ʕinta b-tigri leeh - ɛaawiz tiɛawwaḍ if-fiwayya lli wqift-u-hum* why are you going so fast? do you want to make up for the little while when you stopped? ‖ *ʕallaah yiɛawwaḍ (ɛaleek)* may God make (it) up (to you)! (to one who has lost money or the like). - *ḥ-aɛawwaḍ-haa-lak bukra*

I'll get my own back on you later! - vn *taʕwiiḍ*; ava *miʕawwaḍ*.

تعويض *taʕwiiḍ* /n pl *-aat*/ compensation, indemnity.

تعويضى *taʕwiiḍi* /adj/ substitute. ‖ *ʃaghiza taʕwiḍiyya* artificial limbs.

اتعوّض *ʃitʕawwaḍ* /vi/ to be compensated for, be made up for. *saaʕit il-ḥaẓẓ[i] ma-titʕawwaḍ-ʃ* a moment of pleasure (lost) cannot be replaced. - iva *mitʕawwaḍ*.

استعوض *ʃistaʕwaḍ* /vt/ to obtain a substitute for (s.th.). *b-aqdar ʃastaʕwaḍ-u mil-maxzan* I can replace it from the store. ‖ *ʃistaʕwaḍ-u ʕand allaah* he wrote it off as a dead loss. - vn *ʃistiʕwaaḍ*; ava *mistaʕwaḍ*.

ع و ف [1]

عوف *ʕoof* /prop n/: *ʃabu ʕoof* nickname for *ʕabd ir-raḥmaan*.

ع و ف [2] see ع ف ى: *ʕawaaf, ʕawaafi*

ع و ق [1]

عاق *ʕaaq (u)* /vt/ to hamper, impede.

عائق *ʕaaʃiqˀ* /n pl *ʕawaaʃiq*/ obstacle, hindrance.

عاقة *ʕaaqa* /n pl *-aat*/ impediment (especially one preventing childbirth). *rabb-i-na yfukk[a] ʕaqit-ha* may God grant her a child!

عوّق *ʕawwaq* **1** /vt/ to delay, hold up. **2** /vi/ to dawdle, delay, be late. *ma-tʕawwaq-ʃ[i] fiṭ-ṭariiq* don't dawdle on the way! - vn *taʕwiiq*; ava/pva *miʕawwaq*.

معوّقات *muʕawwiqaatˀ* /pl n/ hindrances, impediments.

اتعوّق *ʃitʕawwaq* /vi/ to be made late, be held up. *laazim itʕawwaqit fiṭ-ṭariiq* something must have delayed her on the way. *ʃil-wilaada tʕawwaqit* the birth was delayed. ‖ *miraat-i mitʕawwaqa* my wife is late in giving birth. - iva *mitʕawwaq*.

استعوق *ʃistaʕwaq* /vt/ **1** to consider (too) late. *ʃistaʕwaqt-ak rawwaḥt* when I felt I'd waited for you long enough I went home. **2** to make (s.o. who is late) hurry up. *ruuḥ istaʕwaq-u* go and call him (he's been too long). - vn *ʃistiʕwaaq*; ava/pva *mistaʕwaq*.

ع و ق [2]

عوّاقة *ʕawwaaqa* /n pl *-aat, ʕawawiiq*/ small mattock.

ع و ل

عال *ʕaal[2] (u)* /vt/ to support, provide for (one's family). - ava *ʕaaʃil*.

عالة *ʕaala* /n/ sponger, parasite.

عايلة، عائلة *ʕeela, ʕaaʃilaˀ* /n pl *-aat*/ family.

عائلى *ʕaaʃili* /adj/ pertaining to the family, familial, domestic. *biṭaaqa ʕaaʃiliyya* family identity card. *liʕba ʕaaʃiliyya* a game suitable for the home. *ʕandu ʕuzr[a] ʕaaʃili* he's tied up at home.

عيّل *ʕayyil* /n pl *ʕiyaal*/ child. ‖ *bitaaʕ ʕiyaal* pederast. - /adjectivally/ *raagil ʕayyil* a childish man.

عيالى *ʕiyaali* /adj/ childish.

عوالة *ʕiwaala* /adv/ parasitically. *ʃintu ʕayʃiin ʕiwaala ʕala miin* who are you sponging on?

عويل *ʕawiil* **1** /adj pl *ʕiwala*/ lazy and incompetent. **2** /n/ *[naut]* rope by which a lateen sail is furled against the mast.

استعول *ʃistaʕwil* /vt/ to consider lazy or incompetent. *ʃistaʕwiluu-k wi-xadu l-filuus minnak* they took advantage of your simplicity and appropriated the money. - vn *ʃistiʕwaal*; ava *mistaʕwil*.

ع و ل ق see also ع ل ق

اتعولق *ʃitʕoolaq* /vt/ **1** to behave promiscuously, be of easy virtue. **2** to behave saucily or provocatively. - ava *mitʕoolaq*.

ع و م [1]

عام *ʕaam[2] (u)* /vi/ **1a** to swim. *tiʕraf tiʕuum* do you know how to swim? ‖ *ʕaam ʕala ʕoom* ... to string along with (s.o. usually in suspect behaviour), as in *bi-tʕuum ʕala ʕoom-u* she supports him indiscriminately, *ma-tʕum-ʃ[i] ʕala ʕom-hum* go your own way, don't follow in their footsteps. **1b** to float. *ʕaayim maʕa l-mayya* drifting with the current. **2** to overflow. *ʃit-tirʕa ʕaamiit ɣarraqit id-dinya* the canal overflowed and flooded everything. *ʃiʃ-ʃafiiḥa ʕayma zeet* the can is brimful of oil. - vn *ʕoom, ʕawaamaan*; ava *ʕaayim*.

عوم *ʕoom* /n/ **1** swimming. **2** *ʕoom il-baḥr [naut]* water-line.

عايم *ʕaayim* /adj */ extra, surplus, hanging loose.

عوّام *ʕawwaam* /adj */ expert at swimming. ‖ *ʃibn il-wizz[a] ʕawwaam [prov]* (the son of geese swims well) ≈ like father, like son.

عوّامة *ʕawwaama* /n pl *-aat*/ **1** float. *ʃil-ʕawwaama btaaʕit is-sifoon* the lavatory cistern float. **2** inflatable ring or other buoyant swimming aid. **3** buoy. **4** houseboat.

عوّيم *ʕawwiim* /adj pl *ʕawwiima*/ expert at swimming.

عوّم *ʕawwim* /vt/ **1** to float, cause to float. *bi-yʕawwim markib-u fil-banyu* he sails his boat in the bath tub. **2** to flood, drench. *lamma ʃaagi ʃamsaḥ b-aʕawwim if-faqqa mayya* when I wash the floor I have the flat swimming with water. **3** *[naut]* to hoist (a sail). **4** *[finan]* to float (a currency). - vn *taʕwiim*; ava/pva *miʕawwim*.

اتعوّم ʔitɛawwim /vi/ passive of ɛawwim. -iva mitɛawwim.

ع و م [2]

عام ɛaam[3] /n pl ʔaɛwaam/ year. *kull[a] ɛaam wi-nta* (or *wi-ntu) b-xeer* may you be well every year! (conventional greeting on the occasion of any annual happy event). *kull[a] ɛaam wi-nta* (or *wi-ntu) hina* may you be here every year (to enjoy this happy occasion)!

ع و ن [1]

عان ɛaan[1] *(i)* /vt/ to come to the help of, side with. *gibt-ak ya ɛabd il-muɛiin tiɛin-ni - laqeet-ak ya ɛabd il-muɛiin titɛaan [prov]* I brought you, Abd al-Mu'in, to help me; I found, Abd al-Mu'in, that it was you that had to be helped. -vn ɛoon; ava ɛaayin.

عون ɛoon[1] /n/ help, assistance. ‖ *ʔallaah yikuun fi-ɛoon-ak* may God help you! (expression of sympathy).

أعوان ʔaɛwaan /pl n/ assistants, helpers. ‖ *ʔaɛwaan sufliyya [magic]* spirits involved in magic.

عانة ɛaana /n pl ɛuun/ pubic hair.

معونة maɛuuna /n/ aid, relief. *maɛuuna min ʔamriika* aid from America.

اتعان ʔitɛaan[1] /vi/ to be helped, be assisted. -iva mitɛaan.

انعان ʔinɛaan[1] = ʔitɛaan[1]. -iva minɛaan.

عاون ɛaawin /vt/ to help, assist. *fii naas mumkin tiɛawn-u* there are people who can help him. -vn *miɛawna, muɛawna*; ava/pva *miɛaawin*.

معاون miɛaawin /n */ assistant (in an official capacity). *miɛaawin in-niyaaba* assistant prosecutor. *miɛaawin il-kulliyya* university administrator responsible for custodial and classroom services. *miɛaawin il-masraḥ* stage-hand. *miɛaawin maḥaṭṭa* railway station traffic controller. *miɛaawin iṣ-ṣiḥḥa* area assistant health officer.

اتعاون ʔitɛaawin /vi/ to co-operate. -vn *taɛaawun*; ava *mitɛaawin*.

تعاوني taɛaawuni /adj/ pertaining to co-operation. *gamɛiyya taɛawniyya* government-owned foodstore.

أعان ʔaɛaan = ɛaan[1]. -vn ʔiɛaana; ava *muɛiin*; pva *muɛaan*.

إعانة ʔiɛaana /n pl -aat/ subsidy.

معين muɛiin /n/ Helper (epithet of God). *ɛabd il-muɛiin* see ɛaan[1].

استعان ʔistaɛaan *(yistiɛiin, yastaɛiin, yistaɛaan↓)* /vi/ 1 to seek assistance. *ʔistaɛaanit big-giraan* she asked the neighbours to help. *nistaɛaan ɛaf-faqa bi-llaah* we pray to God for his assistance in dealing with the hard toil ahead of us (used, often jocularly, when beginning work). 2 to make use (of s.th.). *ʔil-ʔalaat illi b-yistiɛiin biiha ṣ-ṣanayɛi* the tools the craftsman employs. -vn ʔistiɛaana; ava mistiɛiin.

ع و ن ( ) [2]

عون ɛoon[2] /n/ giant.

عنت ɛunt: *ma-ɛunt[i]-ʃ, ma-ɛuntii-ʃ, ma-ɛuntuu-ʃ* I (you) would never ... again. cf. ɛaad[1] 4b.

ع و ن [3] see م ع ن : *maɛuun*

ع و و

العوّة ʔil-ɛawwa for *nawwit il-ɛawwa* and *nawwit baaqi l-ɛawwa* see *nawwa*.

ع و ى

عوى ɛawa *(i)* /vi/ to bark (of a dog), howl (a wolf). -vn ɛiwa; ava ɛaawi.

عوّى ɛawwa /vi/ intensive form of ɛawa. -ava miɛawwi.

ع و ى ش

عويشة ɛaweeʃa /prop n/ name of a demon, said to be of Moroccan origin, invoked in *zaar* rituals.

ع ى ب

عاب ɛaab *(i)* 1 /vt/ to attach blame or inadequacy to. *ʔaẓunn[i] baɛd[i] kida ma-ḥadd[i]-ʃ yiqdar yiɛib-ni f-ḥaaga* I think that after this nobody should be able to attach any blame to me. 2 /vi/ to err in personal matters. *ʔil-ʔaṣiil ma-yɛib-ʃ* the well-bred (person) never misbehaves. *ɛaab fi-* to insult, use bad language to, as in *ʔibn-i muʔaddab wi-ma-yɛib-ʃ[i] f-ḥadd* my son is well-mannered and never uses bad language to anyone. *ʔil-ɛeeb fiz-zaat il-malakiyya [leg, obsol]* insulting the King's name. *ɛaab ɛala* to criticize or attack (s.o.) for, as in *ɛaab ɛalayya sakan-i fil-ḥayy[i] da* he criticized me for living in that quarter. -vn *ɛeeb, ɛayabaan*; ava *ɛaayib*; pva *maɛyuub*.

عيب ɛeeb /n/ 1 shameful behaviour. *ʔin-namiima miʃ ɛeeb bass[i] w-ḥaraam laakin daliil ɛala ɛaql[i] faadi* scandal-mongering is not just shameful and forbidden by religion, but is also evidence of a fatuous mind. ‖ *ɛeeb* (1) that's naughty! (to a child). (2) (also *ya ɛeeb*) shame! for shame! *-ya ɛeeb iʃ-ʃoom* (1) shame, for shame! (2) oh what a pity! how awful! *-ɛeeb ɛala* shame on, as in *ɛeeb ɛaleek tiɛmil kida* shame on you for doing such a thing! 2 /pl ɛiyuub, ɛuyuub/ defect, fault, flaw. *fii ɛiyuub fil-qumaaʃ* there are faults in the cloth. *ɛiyub-na fiina* we all have our faults, none of us is perfect.

عيبة ʕeeba /n/ **1** a shameful act. *kida ʕandina ʃakbar ʕeeba* we consider this the most disgraceful thing. **2** bad word, bad language. *lisaan-u ma-yṭallaʕ-ʃ il-ʕeeba* he never uses bad language.

عايب ʕaayib[1] **1** /adj */ indecent, improper (in behaviour). *ʃaayib wi-ʕaayib* (old but still misbehaving) (epithet of) a dirty old man. **2** /n */ guilty party in a dispute. *miin fiikum ʕaayib* who among you is at fault?

معيوب maʕyuub /adj/ defective. *quṭn[i] maʕyuub* defective cotton. *mara maʕyuuba* an immoral woman.

عيّب ʕayyib /vt/ **1** to find fault with, point out the faults of. *ʃil-muhandis ʕayyib kull if-fuxl illi ʕamalt-u* the engineer picked holes in everything I'd done. *ʃin kunt[i] xalṭaan ʕayyibuu-ni* if I'm at fault, tell me! **2** to spoil, render faulty. -vn *taʕyiib*; ava/pva *miʕayyib*.

¶ *ʕayyib ʕala* to hold up to scorn, hold in contempt. *ma-takul-ʃ[i] b-ʃiid-ak ʃaḥsan yiʕayyibu ʕaleek* don't eat with your hand or they'll be scornful. *bi-yʕayyibu ʕala lli ʃaʕr-u-hum ṭawiil* they hold in contempt people who wear their hair long.

عايب ʕaayib[2] /vi/ to denounce as shameful. -vn *miʕayba*; ava *miʕaayib*.

ع ى د see ع و د: ʕaad, ʕiid, ʕidiyya, ʕiyaada, ʕayyid, ʃitʕayyid, muʕayda, muʕiid, ʃiʕtiyaadi

[1] ع ى ر

عار ʕaar[1] /n/ dishonour, disgrace. See further under [2] ع و ر

عيرة ʕiira /adj invar/ false. *sinaan ʕiira* false teeth. *ʃaʕr[i] ʕiira↓* wig.

عيّر ʕayyar[1] /vt/ to taunt (s.o.) by mentioning (his) faults or failures. *ʕayyaruu bi-ʃinnu ʃibn[a] ʕabd iswid* they taunted him for being a black slave's son. -vn *taʕyiir*; ava/pva *miʕayyar*.

اتعيّر ʃitʕayyar[1] /vi/ passive of ʕayyar. -iva *mitʕayyar*.

عاير ʕaayir[1] /vt/ to shame (s.o.) by bringing up things to his discredit. ‖*la tʕayir-ni wala ʃaʕayr-ak - ʃil-hamm[i] ṭayil-ni w-ṭayl-ak [prov]* ≈ don't bring things up against me and I won't against you -we both have our bad points. -vn *miʕayra*; ava/pva *miʕaayir*.

اتعاير ʃitʕaayir[1] /vi/ passive of ʕaayir[1]. -iva *mitʕaayir*.

[2] ع ى ر

عيار ʕiyaar /n pl *-aat, ʃaʕyira/* **1** fixed measure, portion. *ʃil-budra di b-niʕgin-ha bi-ʕyaraat* we mix this powder according to (fixed) measures. *dahab ʕiyaar tamantaaʃar* eighteen carat gold. ‖*zawwid il-ʕiyaar ḥabbiteen* he overdid it a bit. **2** gauge, calibre. ‖*ʕiyaar naari* (1) calibre (of a gun). (2) (rifle) shot. *ʃil-ʕiyaar illi ma-yṣib-ʃ[i] yidwiʃ [prov]* the shot that doesn't find its target will at least give a fright.

عيارى ʕiyaari /adj/ standard (in size, quality etc.).

معيار miʕyaar /n pl *maʕayiir/* standard, norm.

عيّر ʕayyar[2] /vt/ to mark in graduations. *kizaan miʕayyara* graduated beakers. -vn *taʕyiir*; ava/pva *miʕayyar*.

اتعيّر ʃitʕayyar[2] /vi/ to be marked in graduations. -iva *mitʕayyar*.

عاير ʕaayir[2] /vt/ to measure out, gauge. *ʕayirt il-mayya bil-kubbaaya* I measured the water out by the glass. -vn *miʕayra*; ava/pva *miʕaayir*.

اتعاير ʃitʕaayir[2] /vi/ to be measured out, be gauged. -iva *mitʕaayir*.

[3] ع ى ر

عار ʕaar[2↓] *(i)* = ʃaʕaar.

أعار ʃaʕaar↑ /vt/ to second, send on secondment. *ʃaʕaruu-ni lil-xaarig* they sent me on secondment abroad. -/the literary passive occurs/ *ʃil-mudarris yuʕaar lit-tadriis fid-duwal il-ʕarabiyya* a teacher may be seconded to teach in the Arab states. -vn *ʃiʕaara*; ava *muʕiir*; pva *muʕaar*.

معار muʕaar↑ /adj/ out on loan. *ruṭt afattiʃ ʕal-kitaab fil-maktaba laʔeet-u muʕaar* I went to look for the book in the library and found that it was out.

استعار ʃistaʕaar↑ /vt/ to borrow. *ʃistaʕart ik-kitaab min il-maktaba* I borrowed the book from the library. -vn *ʃistiʕaara*; ava *mustaʕiir*; pva *mustaʕaar*.

استعارة ʃistiʕaara /n pl *-aat/ [gram]* metaphor.

[4] ع ى ر

عير ʕiir↑ /n/ caravan. ‖*la (luh) fil-ʕiir wala fin-nafiir* he has nothing to do with it.

[1] ع ى ز see [1] ع و ز: ʕaayiz

[2] ع ى ز see [2] ع و ز: ʃil-ʕiyaazu

ا ع ى س

عيسى ʕiisa /prop n/ **1** Jesus. **2** *[Isl]* male given name.

ع ى ش

عاش ʕaaʃ *(i)* /vi/ **1** to live. *ʕaaʃ faʔiir* he lived in poverty. *ʃana ʕiʃt[i] ṭuul ʕumr-i fi-skindiriyya* I've lived all my life in Alexandria. *di t-tigaara lli bi-yʕiif minha* this is the trade by which he lives. *ʃana b-aʕiif ʕala d-dawa da* I live on that medicine. *ʕaaʃ ʕala l-hawa* he led a very meagre existence. *ʃil-ʕiiʃa hina ṣaʕba* life is tough here. ‖*tiʕiif* may you live long! (in reply to an expression of

thanks or a compliment). - *tiʕiif ʃinta* may you live long! (in reply to an enquiry after s.o. who, unknown to the enquirer, has died). - *tiʕiif wi-taaxud ʁer-ha* may you live to suffer again! (light-hearted consolation after a minor misfortune). - *tiʕiif wi-tgiib* may you live long to support us! (to the breadwinner of a family or anyone bringing a gift). - *tiʕiif wi-tiftikir* may you live long and remember! (expression of condolence to the bereaved on the occasion of an anniversary). - *ʕaaʃ min ʃaaf-ak* ≈ it's good to see you! (to s.o. one has not seen for a long time). - *yaʕiif* long live ...! as in *yaʕiif il-malik* long live the king! - *ʃilli yʕiif yaama yʃuuf [prov]* ≈ the longer you live the more you see, the world is full of wonders. **2** to spend all one's time. *ʃil-ʕiyaal fi-ʃagaaza w-ʕayʃiin fiʃ-ʃariʕ* the kids are on holiday and spend all their time in the street. **3** to last, keep, stay fresh. *ʃil-qurunfil bi-yʕiif ʕan il-ward il-baladi* (cut) carnations last longer than (cut) roses. *ʕalaʃaan yiʕiif laazim tigiib-u ṣaabiḫ* if you want it to keep you have to buy it fresh. — /vt/ **4** to live through, experience. *ḫasseet bil-wiḫda lli ʃana ʕayiʃ-ha* I became aware of the lonely life I'm living. - vn *ʕiiʃa*; ava *ʕaayiʃ*.

عيشة *ʕiiʃa* /n/ a way of life, living. *ʕirift[i] min ʕiʃt-i* I came to hate my way of life. *di ʕiiʃa tkaffar* this life is enough to make one renounce one's religion.

عايشة *ʕeeʃa* (also *ʕayʃa*) /prop n/ female given name. ‖ *bint[a] ʕeeʃa* type of small, sweet date. - *ʕeeʃa f-suuq il-ʁazl* ((a woman named) *ʕeeʃa* in the (crowded) yarn market) ≈ a needle in a haystack.

عيش *ʕeeʃ* /n/ bread. *kul ʕeeʃ ḫabiib-ak tisurr-u wi-kul ʕeeʃ ʕadiww-ak tidurr-u [prov]* ≈ if you eat the food of a friend it makes him glad, if you eat the food of an enemy he resents it. ‖ *ʃakl[i] ʕeeʃ* earning one's daily bread, making one's living. *ʃaakul ʕeeʃ ʃizzaay* how shall I earn a living? - *qaṭaʕ ʕeeʃ(-u)* to cut off the source of (s.o.'s) livelihood, lose (s.o.) his job. - *kalna sawa ʕeeʃ wi-malḫ* we've been through thick and thin together, we're close friends. *ʕalaʃaan xaaṭir il-ʕeeʃ wil-malḫ illi benna* for the sake of all we mean to each other.

معيشة *maʕiiʃa* /n/ life, living (especially from the material point of view). *ʃil-maʕiiʃa ʁalya* life is expensive. *mustawa l-maʕiiʃa* the standard of living. *mistirayyaḫ fi-maʕiʃt-(u)* in comfortable circumstances. *ʃoodit maʕiiʃa* living room.

معيشى *maʕiiʃi†* /adj/ pertaining to everyday life. *ʃil-ʃumuur il-maʕiʃiyya* everyday affairs.

معاش *maʕaaʃ* /n pl *-aat*/ pension. ‖ *ṭiliʕ ʕal-maʕaaʃ* to retire.

عيّش *ʕayyiʃ* /vt/ **1** to provide subsistence for. *xal-ha mʕayyiʃ-ha* her uncle supports her. **2** to keep alive, sustain. - vn *taʕyiiʃ*; ava *miʕayyiʃ*.

اتعيّش *ʃitʕayyiʃ* /vi/ **1** to earn a living. **2** passive of *ʕayyiʃ*. - ava/iva *mitʕayyiʃ*.

إعاشة *ʃiʕaaʃa* /n/ provision (for), support. *ʃil-ḫukuuma b-tiʕmil tartibat-ha ʕaʃaan ʃiʕaaʃit is-sukkaan min gidiid fi-manṭiqit il-qanaal* the government is making arrangements in order to provide for the inhabitants of the Canal area again.

ع ى ض

عيضة *ʕeeḍa, ʕiiḍa* /n/ a mess, a bad condition. *ḫalit-hum baqit ʕeeḍa* their life turned to misery.

ع ى ط

عياط *ʕuyaaṭ* or *ʕiyaaṭ* /n/ crying, weeping. *yalla ninfitiḫ fil-ʕiyaaṭ* come on then, let's all have a good cry!

عيّاط *ʕayyaaṭ* /n */ one who cries a lot, cry-baby.

عيّط *ʕayyaṭ* **1** /vi/ to cry, weep. *ʕayyaṭ lamma nfalaq* he cried his eyes out. **2** /vt/ to make (s.o.) weep. *ʃeeh illi mʕayyaṭ-ak kida ya-bn-i* what are you crying like that for, son? - ava/iva *miʕayyaṭ*.

ع ى ف

عاف *ʕaaf (i)* /vt/ to disdain. *nifs-i ʕaafit il-ʃakl* I went off eating. - vn *ʕayafaan*; ava *ʕaayif*.

اتعاف *ʃitʕaaf* /vi/ to be disdained. - iva *mitʕaaf*.

ع ى ق

عياقة *ʕayaaqa, ʕiyaaqa* /n/ dandyism, foppishness.

عايق *ʕaayiq* **1** /adj * and pl *ʕuyyaaq*/ dandified, foppish. **2** /coll n/ *[bot]* delphinium(s).

عايقة *ʕayqa* /n pl *-aat*/ *[obsol]* madam of a brothel.

اتعايق *ʃitʕaayiq* /vi/ to show off, behave ostentatiously. *bi-yitʕaayiq bi-ʕarabiyt-u* he goes around showing off his car. - ava *mitʕaayiq*.

ع ى ل see ع و ل: *ʕeela, ʕaaʃila, ʕayyil, ʕiyaal, ʕiyaali*

ع ى ن[1]

عين *ʕeen* /fem n, pl *ʕiyuun, ʕuyuun*/ **1** /pl also *ʕeneen*/ eye. *ʕenee ḍaʕiifa* his eyes are weak. *fayf-u ḳuddaam ʕenay-ya* I see him before my very eyes. *duktoor ʕeneen* oculist. *b-aḫibb-ak ḳadd[i] ʕnay-ya* I love you dearly. *ma-ḳdirt[i]-ʃ ʃaḫuṭṭ[i] ʕeen-i f-ʕeen-u* I couldn't look him in the eye. *ʃin-naas tunzur ʃilee b-ʕeen l-iḫtiraam* people regard him with respect. ‖ *ʕeneen ...* yes, dear (in response to a call), as in *maama - ʕeneen maama* 'Mummy!' 'Yes, dear!'. - (*min* or *fi-*) *ʕenay-ya (l-itneen)* or *ʕala ʕeen-i w-raas-i* or *min ʕeen-i di*

w-ɛeen-i di at your service! with pleasure! (response to a request). - *ɛeen-(u) fi-* (he) wants (s.th.) very badly, as in *ʕiʃtiri-ha-lha madaam ɛen-ha fiiha* buy it for her since she wants it so badly. - *ɛeen-(u) ɛala* ... he has his eye on ..., he's out to get ..., as in *ɛeen-u ɛal-bitt*^{i} *di* he has his eye on that girl. - *ya ɛeen-i* (1) how marvellous! (2) poor thing! what a pity! - *(ya) ɛeen-i ɛala* ... (1) how marvellous is ...! as in *ya ɛeen-i ɛal-gamaal da* how beautiful this is! (2) *[women]* how I pity ...! as in *ya ɛeen-i ɛaleek* you poor dear! - *(da) bi-ɛeen-(u)* not even if (he) gives (his) eye, as in *ʕinta ɛaawiz ɛafara gneeh ɛal-ḥikaaya di - da b-ɛeen-ak* you want ten pounds for this? no way! - *ɛeen-i ɛeen-ak* openly, frankly, as in *bi-yisraqu ɛeen-i ɛeen-ak* they steal brazenly. - *ɛala ɛeen-ak ya taagir* openly, not trying to hide anything, as in *bi-thazzar maɛa r-riggaala kida ɛala ɛeen-ak ya taagir* she jokes around quite openly with the men. - *wiqiɛ* (or *nizil) min ɛeen(-u)* to fall out of favour with (s.o.). - *daxal fi-ɛeen(-u)* to gain favour with (s.o.). - *ḥiss-ak ɛeen-ak* ≈ just you dare! - *kamaan fiik ɛeen* ... do you still have the cheek ..., as in *kamaan fiik ɛeen tiqawiḥ-ni* do you still have the gall to bicker with me? - *ɛeen-ak ma-tfuuf ʕilla n-nuur* (may your eye see only light) ≈ you can't imagine ...! as in *ʕil-muʃkila kibrit wi-kibrit ɛeen-ak ma-tfuuf ʕilla n-nuur ɛa-lli ḥaṣal* the problem grew larger and larger - you can't imagine what happened! *ʃufna villa ɛeen-ak ma-tfuuf ʕilla n-nuur mubilya ʕeeh wi-ruxaam ʕeeh* such a villa as we saw! you could never imagine - such furniture, such marble ...! - *ʕil-ɛeen baṣiira wil-yadd*^{i} *qaṣiira [prov]* (the eye sees but the arm is short) ≈ the desire (or willingness) is there but not the means. - *ḥaaga ɛaleeha l-ɛeen* something desirable. - *ɛeen-i ɛaleek barda* may I not be envious of you (said to emphasize admiration). - *ʕil-ɛeen tikrah illi ʕaḥsan minha [prov]* ≈ people tend to hate their betters. - *ɛeen il-ɛaql* the epitome of reasonableness. - *ʕabu ɛeen farɣa* one who is never satisfied. - *ʈallaɛ ɛeen(-u)* to give (s.o.) a hard time, as in *ḥ-addii-lu fuɣla ʈallaɛ ɛeen-u* I'll give him a job that will really make him slog hard. - *ya ḥabbit ɛeen-i* ≈ my poor dear! (expression of affectionate sympathy). - *warra l-ɛeen il-ḥamra* to show one's anger, show one's displeasure. - *mala ɛeen(-u)* see *mala*^{2}. - *ɛeen fig-ganna w-ɛeen fin-naar* ≈ not being able to make up one's mind. - *ʕilli ybuṣṣ-i-li b-ɛeen ʕabuṣṣ-i-lu bil-itneen* ≈ if someone treats me well, I'll treat him even better. - *ḥaʈʈ ... fi-ɛeen(-u)* to take good care of, as in *law ga ɛandi ḥ-aḥuʈʈ-u f-ɛeen-i* if he comes to stay with me I'll look after him very well. - *ɛeen (ig-)gamal* walnut(s). **2** any of various objects bearing a resemblance to the eye (e.g., burner of a stove, bud of a plant). *beeḍ ɛiyuun* fried eggs sunny-side up. **3** /usu pl/ hole, opening, space. *ɛuyuun il-miʃṭ* spaces between the teeth of a comb. *ɛuyuun il-maṣfa* holes in a sieve. **4** spring (of water). ‖ *ɛeen ʃams* a north-eastern suburb of Cairo. — /no pl/ **5** *ʕil-ɛeen* the evil eye, the capacity for harming people by regarding them enviously. *ṣabit-ni l-ɛeen* I was afflicted by the evil eye. **6** /always in constr/ epitome, essence. *da ɛeen il-ḥaqiiqa* ≈ this is God's truth. *ɛeen ʕaɛyaan iṣ-ṣiɛiid* the most notable of the notables of Upper Egypt. **7** *[leg]* property. *ṣaaḥib il-ɛeen* the property owner. — /pl *-aat*/ **8** eighteenth letter of the Arabic alphabet.

¶ *bi-ɛeen(-u)* **1** the very selfsame. *miʃ hiyya di s-saaɛa. - laʕʕa di hiyya b-ɛen-ha* 'That's not the watch.' 'Oh yes, it's the selfsame watch!'. **2** certainly not, no way. *ʕiddii-ni ɋirʃ - bi-ɛeen-ak* 'Give me a piastre.' 'Nothing doing.'

أعيان *ʕaɛyaan* /pl n/ notables.

عيني *ɛeeni, ɛayni*$^{\uparrow}$ /adj/ *[leg]* corporeal, material. *ḥaqq*^{i} *ɛeeni* material right. ‖ *qaṣr il-ɛeeni* Kasr el-Aini, a large government teaching hospital.

عينيّة *ɛeniyya* /n pl *-aat*/ eye-piece (of, e.g., microscope, telescope).

عيّنة *ɛayyina* /n pl *-aat*/ specimen, sample. *ɛayyinit ɋumaaʃ* a cloth sample. *xadna ɛayyinaat mil-ʕarḍ* we took samples of the soil. *talat ʕarbaɛ ʃabaab mil-ɛayyinaa-di* three or four youths of that type. ‖ *ʕil-ɛayyina bayyina [prov]* the part reveals the whole.

عيانا *ɛayaanan* /adv/ openly. *xad-ha ɛayaanan bayaanan* he took it openly before everyone.

عياني *ɛayaani* /adj/ material, visible. *ḥalaat ɛayaniyya* concrete examples.

معين *miɛyin* or *muɛyan* /adj invar/ pertaining to a spring. *mayya miɛyin* or *mayya muɛyan* spring water, water drawn from underground (as distinct from, e.g., Nile water).

عيّن *ɛayyin* /vt/ **1** to determine, specify. *ʃik-kuɛuub bitaaɛit if-fikaat bi-tɛayyin-lak raṣiid-ak kaam* the stubs of the cheques specify for you the balance remaining. **2** to appoint, name to an office. *ɛayyinuu ʃahbandar it-tuggaar* they appointed him chief of the merchants. **3** to carry out an on-the-spot inspection of. - vn *taɛyiin*; ava/pva *miɛayyin*; pva *muɛayyan*.

تعيين *taɛyiin* /n pl *-aat*/ **1** appointment, position, job. **2** *[mil]* (one man's) rations.

معيّن *muɛayyan* **1** /adj */ particular, specific. *makaan muɛayyan* a particular place. *fatrit ṣoom muɛayyana* a

set period of fasting. **2** /n **pl** *-aat*/ rhomboid.

اتعيّن *ʔitɛayyin* /vi/ **1** to be specified, be determined. *makaan ig-gariima tɛayyin biẓ-ẓabṭ* the site of the crime has been fixed precisely. **2** to be appointed. *nifs-i ʔatɛayyin fi-ʃirka* I'd like to get a job in a company. -vn *taɛayyun*; ava *mitɛayyin*.

عاين *ɛaayin* /vt/ to carry out an on-the-spot inspection of. *bi-tiigi lagna min wizaarit iṣ-ṣiḥḥa tɛaayin il-makaan* a committee from the Ministry of Health comes to inspect the place. -vn *muɛayna*; ava/pva *miɛaayin*.

معاينة *muɛayna* /n pl *-aat*/ on-the-spot inspection. *ɛal-muɛayna* on inspection, as in *ma-niʃtirii-ʃ ʔilla ɛal-maɛayna* we don't buy unless we inspect (the goods) first.

ع ى ن ²

عان *ɛaan²* *(i)* /vt/ **1a** to remove, take away. *ɛin-ha min hina* take it away from here! **1b** to lift, carry. *ɛiin iʃ-ʃanṭa ɛalayya* lift the bag onto my back! **2** to keep in a safe place. *bi-yɛiin filuus-u taḥt il-balaaṭa* he keeps his money hidden away under a tile. -vn *ɛeen, ɛayanaan, ɛiyaana*; ava *ɛaayin*; pva *maɛyuun*.

اتعان *ʔitɛaan²* /vi/ **1a** to be removed, be taken away. **1b** to be lifted, be carried. *ʔana ɛaawiz iʃ-ʃanṭa titɛaan ɛalayya* I want to have the bag lifted onto my back. **2** to be kept in a safe place. *ʔil-filuus laazim titɛaan fil-bank* the money must be put away in the bank. *ʔil-muftaaḥ ḥa-yitɛaan taḥt id-dawwaasa* the key will be kept hidden under the door-mat. -iva *mitɛaan*.

انعان *ʔinɛaan²* = *ʔitɛaan²*. -iva *minɛaan*.

ع ى ى

عيى *ɛiyi (a)* /vi/ to fall sick. *ʔawwil ma ɛyiit rigl-i wirmit* when first I fell sick my foot swelled. -vn *ɛaya*; ava *ɛayyaan*.

عيا *ɛaya¹ (i)* /vt/ to cause to be ill. *ʔid-dawa da ɛayaa-ni ʔaktar* this medicine made me iller than before. ‖*manẓar yiɛyi* a sickening sight. -vn *ɛaya*; ava *ɛaayi*.

عيا *ɛaya²* /n/ illness. *hiyya lissa ɋayma min ɛaya* she's just getting over an illness. *ʔid-duktuur muxtaṣṣ¹ fil-ɛaya da* the doctor specializes in that illness.

عيّان *ɛayyaan* /n */ patient.

اتعيا *ʔitɛaya* /vi/ to be made ill. -iva *mitɛiyi*.

إعياء *ʔiɛyaaʃ* /n/ weariness, fatigue. *ʔana f-ɤaayit il-ʔiɛyaaʃ* I am exhausted.

غ

غ ا ب

غاب ɣaab[1] /coll n/ reed(s), cane(s). *ɣaab farsi* Persian cane. ‖ *ɣaab ʃafrangi* bamboo. - *ɣaawi ʃurb il-ɣaab* fond of smoking a *gooza*.

غابة ɣaaba /n pl -*aat*/ **1** /unit n/ a (piece of) reed, a (piece of) cane. *ɣaabit gooza* the mouth-reed of a *gooza* (see Pl.I, 8). **2** forest, jungle.

غ ا ر[1]

غار ɣaar[1] /n/ *[bot]* bay (Laurus nobilis).

غ ا ر[2] see غ و ر : *ɣaar*[4], *ɣaara*

غ ا ز

غاز ɣaaz <perh Fr> /n pl -*aat*/ gas. *ɣazaat saamma* poisonous gases.

غازى ɣaazi[1] /adj/ gaseous.

غ ا ص

غاصة ɣaaṣa <It *gassa*> /n pl -*aat*/ *[naut]* grommet.

غ ا غ

غاغة ɣaaɣa /n/ noise, uproar, tumult.

غ ا ى

غاية ɣaaya, ɣaaya /n pl -*aat*/ **1** extreme, furthest extent. *ɣaayit is-saɛaada* extreme happiness. *ʃana mabsuuṭ lil-ɣaaya* I am extremely pleased. ‖ *ɣayt-u* in short, to cut a long story short, as in *ɣayt-u baṣṣeet laqeet gasad-i mxaddil kull-u* to cut a long story short, I suddenly discovered that my whole body had gone numb. **2** aim, goal. *ɣayit-na l-ʃixlaaṣ fil-ɛamal* our aim is devotion to work. ‖ *ʃil-ɣaaya tbarrar il-wasiila [prov]* the end justifies the means.

¶ *li-ɣaayit* /prep/ until, till, up to. *li-ɣaayit dilwaqti ma-rigɛit-ʃ* she hasn't come back so far. *waṣṣal-ni l-ɣaayit il-beet* he saw me home. - *li-ɣaayit ma* or *li-ɣaayit lamma* /conj/ till, until. *miʃ ḥa-niʃtiri minnu l-ɣaayit ma ybiiɛ bit-tasɛiira* we won't buy from him until he sells at the government fixed price. *min saaɛit ma twalad li-ɣaayit lamma baqa sulṭaan* from the moment he was born till he became sultan.

غ ب ر

غبرة ɣabara /n/ fine dust.

أغبر ʃaɣbar /adj, fem ɣabra, pl ɣubr/ **1** dusty, covered with dust. **2** miserable, rotten, lousy. *ɛaman ʃaɣbar* miserable times. ‖ *wiʃʃ-(u) ʃaɣbar* (he) brings bad luck.

غبار ɣubaar /n/ fine dust. ‖ *ɣubaar ɛarriʔ* atomic fall-out.

غبارة ɣubaara /n/ **1** /pl -*aat*/ speck of dust. **2** /no pl/ fine quality hashish. *ɣubaarit il-ɣubaara* superfine hashish.

غبّر ɣabbar **1** /vt/ to make dusty, cover with dust. **2** /vi/ to become dusty. - vn *taɣbiir*; ava/pva *miṭɣabbar*.

اتغبّر ʃiṭɣabbar /vi/ to become dusty, get covered with dust. *ʃik-karaasi ṭɣabbarit wi-baqa ḥal-ha ɛayy il-hibaab* the chairs got covered with dust and are in a filthy state. - ava/iva *miṭɣabbar*.

غ ب ش

أغبش ʃaɣbaʃ /adj, fem ɣabʃa, pl ɣubʃ/ **1** dark grey in colour. **2** faded, muted (of colours).

غبّش ɣabbiʃ **1** /vt/ to cloud, make murky. *ʃir-ruṭuuba ɣabbiʃit ɛizaaz iʃ-ʃababiik* moisture clouded the windows. *ɛizaaz miɣabbiʃ* (1) cloudy, murky glass. (2) frosted or semi-opaque glass. **2** /vi/ to cloud over, become murky or difficult to see through. *ʃid-dinya kaanit miɣabbiʃa saaɛit il-fagriyya* it was misty around dawn. - vn *taɣbiiʃ*; ava/pva *miɣabbiʃ*.

اتغبّش ʃitʁabbiʃ /vi/ to become murky, cloudy or foggy. -ava *mitʁabbiʃ*.

غ ب ط

غبيط ʁabiiṭ /n pl ʁibṭaan, ʁibṭa, ʁibíṭa, ʃiʁbiṭa/ sack split sideways and slung over a donkey's back to carry manure or dirt (see Pl.D, 4). — /adjectivally/ *raagil ʁabiiṭ bi-ṣaḥiih* a real oaf of a man.

غ ب ن

غبن ʁabanˀ *(i)* /vt/ to do (s.o.) an injustice (particularly in business). *kull[i] waaḥid miṭ-ṭarafeen bi-yquul ʃinnu maʁbuun fil-beeʕa* each of the two sides claims he's been had in the deal. -vn *ʁabn*; ava *ʁaabin*; pva *maʁbuun*.

غبن ʁabnˀ /n/ injustice (particularly in business).

اتغبن ʃitʁabanˀ /vi/ to be done an injustice. -iva *mitʁibin*.

غ ب و

غبى ʁabi /adj pl ʃaʁbiya, ʃaʁbiyya, ʁabiyyiin/ foolish, stupid.

أغبى ʃaʁba /el/ more/most stupid.

غباوة ʁabaawa /n/ foolishness, stupidity. *ʁabawt-u gamda ʕawi* he is very stupid.

غباء ʁabaaʔˀ = *ʁabaawa*.

اتغابى ʃitʁaaba /vi/ to play the fool, act stupid. *ḥa-titʁaaba ʕalayya* are you going to act the fool with me! -vn *taʁaabi*; ava *mitʁaabi*.

استغبى ʃistaʁba /vt/ 1 to consider stupid or foolish. 2 to select for stupidity. — /vi/ 3 to pretend to be stupid or foolish. -ava *mistaʁbi*.

غ ب ى [1]

غبّى ʁabba /vt/ to hide, conceal. *leeh miʁabbi l-mawḍuuʕ ʕalayya* why are you hiding the matter from me? -vn *taʁbiyya*; ava/pva *miʁabbi*.

اتغبّى ʃitʁabba /vi/ to be hidden, be concealed. -iva *mitʁabbi*.

غ ب ى [2] see غ ب و : *ʁabi, ʃitʁaaba, ʃistaʁba*

غ ت ت

غتّ ʁitt /adj */ insupportable (of a person).

غتيت ʁatiit /adj/ unpleasant (of a person).

غتوت ʁatuut /adj/ unpleasant (of a person).

غتاتة ʁataata /n/ unpleasantness.

غتّت ʁattit /vi/ to cause unpleasantness. *ʃil-ʕiyaal kaanu b-yilʕabu w-mabsuṭiin daxal ʁattit ʕaleehum* the kids were happily playing when in he came and spoilt everything for them. -vn *taʁtiit*; ava/pva *miʁattit*.

اتغتّت ʃitʁattit /vi/ (impersonal) passive of *ʁattit*. *kull[i] leela ynaamu mitʁattit ʕaleehum* every night they go to bed upset. -iva *mitʁattit*.

غ ث ث see غ ت ت

غ ج ر

غجر ʁagar /coll n/ 1 gypsies. 2 disreputable rowdy people.

غجرى ʁagari /n pl ʁagar/ 1 gypsy. 2 rowdy and foul-mouthed man.

غجريّة ʁagariyya /n pl -aat/ 1 gypsy woman. 2 rowdy and foul-mouthed woman.

أغجر ʃaʁgar /el/ more/most abusive or foul-mouthed.

غجّر ʁaggar /vi/ to hurl abuse. *bi-tʁaggarii-li leeh ya wliyya -huwwa-na gooz-ik* what are you screaming abuse at me for, woman -am I your husband? -vn *taʁgiir*; ava *miʁaggar*.

اتغجّر ʃitʁaggar /vi/ (impersonal) passive of *ʁaggar*. *ʃana miʃ illi yitʁaggar liihum* I am not someone to be abused. -iva *mitʁaggar*.

استغجر ʃistaʁgar /vt/ to select for abusiveness. -ava *mistaʁgar*.

غ د ا ن

غدان ʁadaan /n/ spice similar to a clove but larger, used in the preparation of *muʁaat*.

غ د د

غدّة ʁudda /n pl ʁudad, ʁuduud/ gland.

غ د ر

غدر ʁadar *(u)* /vi/ to act treacherously, break faith. *ṣaḥibt-u w-baʕd il-ʕifra ṭ-ṭawiila ʁadar biyya* I befriended him, and after a long friendship he turned against me. -vn *ʁadr*; ava *ʁaadir*; pva *maʁduur*.

غدر ʁadr /n/ perfidy, treachery, betrayal. ‖ *ʕeen il-ʁadr* perfidy incarnate, as in *fi-wiʃʃ-i sinn-a-ha yidḥak-li wi-f-ḍahr-i tbuṣṣ-i-li b-ʕeen il-ʁadr* she smiles to my face but plots treachery behind my back.

غدرة ʁadra /inst n. pl -aat, ʁadaraat/ an act of perfidy. *ʁadraat iz-zaman* life's betrayals, life's disappointments.

غدّار ʁaddaar /adj */ perfidious, faithless. *ʁaddaar zayy il-baḥr [prov]* as treacherous as the sea.

اتغدر ʃitʁadar /vi/ (impersonal) passive of *ʁadar*. *ʃitʁadar biiha* she was betrayed. -iva *mitʁidir*.

غادر ʁaadirˀ /vt/ to depart from, leave (a place). *miʃ mumkin tiʁaadir il-bilaad* you cannot leave the country. -vn *muʁadraˀ*; ava *miʁaadir*; pva *muʁaadar*.

غ د ف

غدفة *ɣudfa* /n pl *ɣudaf*/ tight-fitting head-dress resembling a wimple with a long attached cowl that falls to cover the upper part of the body (worn by Muslim women, especially when praying or making the pilgrimage).

غ د ن see غ د ا ن : *ɣadaan*

غ د و see غ د ى : *ɣadwa*

غ د ى

غدا *ɣada* /n/ midday meal, luncheon. *kull[i] yoom tiruuḥ il-ɣeeṭ tiwaddi l-ɣada* she carries lunch to the field every day.

غدوة *ɣadwa* /n pl *-aat, ɣidaw↓*/ a lunch. *ʔil-ɣadwa kaanit kiwayyisa* the lunch was good. ‖*ɣadwa wi-tḥasabit ɛaleek* here's a lunch and it's been put to your account (i.e. the lunch has been prepared specially for you, so eat; said by the host to encourage his guests to eat well). - *ɛamliin ɣadwa* having a joint lunch (i.e. each contributing some food).

غدّى *ɣadda* /vt/ to provide lunch for. *ʔayyaam zamaan kaanit il-bariiza tɣaddi ɛeela* in the old days ten piastres would buy lunch for a whole family. - ava *miɣaddi*.

اتغدّى *ʔitɣadda* /vi and vt/ to eat (for) lunch. *ʔana lissa ma-tɣaddet-ʃ* I haven't eaten lunch yet. *ʔitɣaddeena (b-) kabaab* we had kebab for lunch. ‖ *ʔitɣadda bii ɋabl[i] ma yitɛaʃʃa biik [prov]* (have him for lunch before he has you for supper) ≈ get your blow in first. - ava *mitɣaddi*.

غ ذ ى see غ د ى and [3] غ ز ى

غ ر ب [1]

غرب *ɣirib* or *ɣarab (u)* /vi/ **1** to set (of the sun). *ɣuruub iʃ-ʃams* or *ʔil-ɣuruub* sunset. *ʔiʃ-ʃams[i] ɣarabit* the sun has set. **2**↑ *[abus]* to go away, get lost, disappear. *ma tuɣrub min wiʃʃ-i* get out of my sight! - vn *ɣuruub, ɣarabaan*; ava *ɣaarib*.

الغارب *ʔil-ɣaarib: sab-l(u) l-ḥabl[a] ɛal-ɣaarib*↑ to give (s.o.) free rein, to let (s.o.) do what he wants.

غرب *ɣarb* /n/ west. *nizraɛ id-dura gihit il-ɣarb* we plant the maize on the west side. ‖ *ʔiʃ-ʃarɋ[i] wil-ɣarb* all over the place, as in *ʔiʃtara ḥagaat miʃ-ʃarɋ[i] w-ḥagaat mil-ɣarb* he bought some things from here and some from there.

غربى *ɣarbi, ɣarbi*↑ /adj */ **1** western. *ʔil-baab il-ɣarbi* the west door. **2** western, pertaining to Europe or America. *ʔil-musiiqa l-ɣarbiyya* western music.

الغربيّة *ʔil-ɣarbiyya* /prop n/ Gharbiya, a province in the centre of the Delta, administered from Tanta.

غرباوى *ɣarbaawi, ɣarbaawi* /pl *-yya*/ **1** /adj/ of or pertaining to Gharbiya, from Gharbiya. **2** /n/ a man from Gharbiya.

غربة *ɣurba* /n/ state of being a stranger or foreigner, separation from one's home town and people. *ʔil-ɣurba tɛallim [prov]* being a stranger teaches self-reliance.

غرابة *ɣaraaba* /n/ strangeness. *ʔeeh ɣaraabit il-ḥikaaya di* what is so strange about this story?

غريب *ɣariib* **1** /adj */ **1a** strange, surprising. *ɣariib ʔinni ma-ʃuft-uu-ʃ* it's strange that I didn't see him. **1b** /pl *ʔaɣraab, ɣurb, ɣuraba*/ from the outside, alien, foreign. *waaḥid ɣariib ɛan il-ɛeela* one not related to the family. *gism[i] ɣariib fiz-zoor* a foreign body in the throat. **2** /n pl *ʔaɣraab, ɣurb, ɣuraba*/ stranger, outsider. ‖ *ʔil-ɣariib ʔaɛma wa-law kaan baṣiir [prov]* (the stranger is blind no matter how good his sight) an outsider, no matter how wise, can never understand your problems.

الغريب *ʔil-ɣariib* /prop n/: *siid-i l-ɣariib* a Muslim saint whose tomb is in Suez.

غريبة *ɣariiba* /n/ **1** any of a number of eye ailments. **2** /coll/ impurities in grain. — /interj/ **3** how strange!

أغرب *ʔaɣrab* /el/ stranger/strangest.

مغرب *maɣrib* /n pl *maɣaarib*/ **1a** period around sunset, late afternoon. *ḥ-agib-hum-lak in-nahar-da l-maɣrib* I will bring them to you at sunset. **1b** *ʔil-maɣrib* or *ṣalaat il-maɣrib [Isl]* the sunset prayer. **2a** west, place where the sun sets. *ʔil-maʃaariɋ wil-maɣaarib* (the easts and the wests) everywhere, as in *rabb il-maʃaariɋ wil-maɣaarib* Lord of the whole world. **2b** *ʔil-maɣrib* (1) North Africa to the west of Libya. (2) Morocco.

مغربى *maɣrabi* /pl *maɣarba*/ **1** /adj/ **1a** of or pertaining to North Africa west of Libya. ‖*mooz maɣrabi* variety of high quality banana with a spotted skin. **1b** Moroccan. **2** /n/ a Moroccan.

مغربيّة *maɣribiyya* /n pl *-aat*/ period around sunset, late afternoon.

غرّب *ɣarrab* /vt/ **1** to cause to leave one's home, cause to go abroad. *ʔakl il-ɛeef ɣarrab-ni* I left home in search of a livelihood. **2** to estrange. *ʔil-buɛd[i] ɣarrab-na* long separation has made us strangers. — /vi/ **3** to turn or move to the west. *tiɣarrab tiʃarɋ miʃ ḥa-taaxud ɣeer naṣiib-ak* go west, go east, you will get only what has been predestined for you. - ava *miɣarrab*.

اتغرّب *ʔitɣarrab* /vi/ **1** to leave one's home for a different city or country. *ʔitɣarabt[i] w-ʔana f-sinn itnaaʃar* I left home at twelve. **2** to be made to leave one's home for another city. - ava/iva *mitɣarrab*.

اغترب ʔixtagrab /vi/ to settle abroad. - vn ʔixtiraab; ava mixtirib.

مغترب muxtarib /n */ 1 [acad] foreign student. 2 Arab emigrant living in a non-Arab country.

استغرب ʔistaʁrab 1 /vt/ to consider strange or amazing. ʔistaʁrabt illi ḥaṣal I thought what had happened was astonishing. 2 /vi/ to be astonished, be amazed, be surprised. ʔana b-astaʁrab ʔinnak bi-tirfii-ni I am astonished that you should bribe me. baṣṣuu-li bi-stiʁraab they looked at me in amazement. - vn ʔistiʁraab; ava mistaʁrab.

² غ ر ب

غراب ʁuraab /n pl ʁirbaan, ʁirba, ʁiríba/ 1 crow. ‖ ʁuraab nuuḥi raven. - ʕiff[i] ʁuraab fungi (specifically mushrooms). - ʁurzit rigl[i] ʁuraab herring-bone stitch. - ʁuraab il-been bird of ill-omen, one who brings bad news or misfortune. - ʕaamil zayy il-ʁuraab crabbed and ugly. - ʔeef (or yaama) gaab il-ʁuraab l-umm-u [prov] what (or how often) did the crow bring to its mother? (of one who brings a worthless gift or disappoints in the fulfilment of his obligations). - nizil b-iid-u rigl[i] ʁuraab ṭiliʕ biiha xuff[i] gamal he stuck in his hand thin (i.e. empty) as a crow's foot and pulled it out thick (i.e. full) as a camel's hoof (of a greedy eater). - zayy[i] gamʕiyyit il-ʁirbaan ʔawwil-ha kaak wi-ʔaxir-ha kaak [prov] like a meeting of crows, nothing but cawing. 2a [carp, metal] dead centre (of a lathe). 2b [text] tip (of a shuttle).

³ غ ر ب see غ ر ى ب : ʁurayyiba

غ ر ب ل

غربال ʁurbaal /n pl ʁarabiil/ large coarse-meshed sieve, riddle. ‖ ʃaal il-mayya bil-ʁurbaal [prov] (he carried the water in the sieve) ≈ he managed the impossible. - ʃil-ʁurbaal ig-gidiid lu ʃadda [prov] (the new sieve is taut) ≈ a new broom sweeps clean. - ʃilli ma yʃuuf min il-ʁurbaal yibʕa ʔaʕma [prov] he who can't see through a sieve must be blind (of one who is blind to the obvious). - ʃabu ʁarabiil dragon-fly.

غربل ʁarbil 1 /vt/ to sieve or sift with a ʁurbaal. bi-yʁarbil il-ʁalla he sifts the wheat. ‖ fi-yoom is-subuuʕ bi-yʁarbilu l-ʕayyil fi-ʁurbaal they shake the baby around in a sieve on the seventh day after his birth. 2 /vi/ [eng, mech, auto] to shake, vibrate, spin off balance, spin off centre. ʕagal il-ʕarabiyya ʕaayiz yitwizin ʕaʃaan ma-yʁarbil-ʃ the car's wheels need balancing so that they won't vibrate. - vn ʁarbala; ava/pva miʁarbil.

اتغربل ʔitʁarbil /vi/ to be sieved or sifted with a ʁurbaal. - iva mitʁarbil.

¹ غ ر ر

غرّ ʁarr (u) /vt/ to deceive, take in. ʔik-kalaam da ʁarr-i-ni the business took me in. kaanit maʁruura fiik she overrated you. - vn ʁarr, ʁararaan; ava ʁaarir; pva maʁruur.

مغرور maʁruur (also maʁruur fin-nafs) /adj */ conceited, vain.

غرور ʁuruur /n/ vanity, conceit. ʔil-ʁuruur waxd-u he is utterly conceited.

غرور ʁaruur /adj invar, sometimes fem ʁaruura/ treacherous (of time, life etc.). ʔid-dinya l-ʁaruura the deceptive world, life the deceiver.

اتغرّ ʔitʁarr /vi/ 1 to be deceived, be taken in. ʔitʁarreet fi-gamal-ha I was taken in by her beauty. 2 to become conceited or vain. - ava/iva mitʁarr.

¶ ʔitʁarr[i] f-nafs(-u) to become vain.

انغرّ ʔinʁarr = ʔitʁarr. - ava/iva minʁarr.

² (غ ر ر)

غرّ ʁurr /coll n/ coot(s).

غرّة ʁurra /n pl -aat, ʁurar/ 1 blaze (on a horse's forehead). 2 first day of a lunar month.

غرارة ʁaraara /n pl ʁaraayir/ large bag of stout coarsely-woven material for grain (capacity approximately 120 kg.).

غ ر ز

غرز ʁaraz, ʁaraz (i) (also ʁaras) 1 /vt/ to plant, insert (especially in the ground). ʁarazt[a] ʕaṣayt-i fil-ʔarḍ[a] ʕaʃaan ʔaʕallim il-makaan I planted my stick in the ground to mark the place. ʁarazt[i] ṣbaaʕ-i f-ʕeen-u I poked my finger in his eye. 2 /vi/ to become stuck. rigl-i ʁarazit fiṭ-ṭiin my foot got stuck in the mud. ʔil-ʕarabiyya ʁarazit fir-raml the car got stuck in the sand. - vn ʁarz, ʁarazaan; ava ʁaariz; pva maʁruuz.

غرزة ʁurza /n pl -aat, ʁuraz/ 1 stitch. 2 place such as small teashop, in which hashish is smoked.

غريزة ʁariiza /n pl ʁaraayiz/ instinct. ʁariizit ig-gins the sexual instinct. ʔis-sirʕa ʁariiza fiihum they are a thieving lot.

غريزى ʁariizi[†] /adj */ instinctive, impulsive, natural. da raagil ḥissi w-ʁariizi he is a sensuous man who obeys only his natural instincts.

مغرز maʁraz /n pl maʁaariz/ [slang] trick, trap, intrigue (against s.o.).

اتغرز ʔitʁaraz (also ʔitʁaras) /vi/ 1 to be planted, be inserted. ʔif-fatla laazim titʁiriz gaamid fil-ʔarḍ the

seedling should be firmly fixed in the ground. **2** to become stuck. *rigl-i ɣarazit fiṭ-ṭiin* my foot got stuck in the mud. **3** to fall victim (to an intrigue). *ʕitɣarazt*^{i} *fil-maqlab illi ɛamalu-huu-li* I fell in the trap they laid for me. - ava/iva *mitɣiriz*.

انغرز *ʕinɣaraz* = *ʕitɣaraz*. - ava/iva *minɣiriz*.

غ ر س see غ ر ز : *ɣaras, ʕitɣaras*

غ ر ض

غرض *ɣaraḍ* /n pl *ʕaɣraaḍ*/ **1** desired end, objective, goal. *ʕeeh il-ɣaraḍ min kida* what's the purpose of that? *ʕana ɣaraḍ-i ʕaqul-lak xalli baal-ak* what I'm trying to tell you is, take care! ‖*luu ɣaraḍ fiiha* he wants her (usually with the sense: he wants to marry her). - *fii ɣaraḍ fi-nafs-u* he's up to something. - *ʕil-ɣaraḍ* in short, to cut a long story short, as in *ʕil-ɣaraḍ ya ḥabibt-i nizilt*^{i} *w-xadt il-ʕutubiis* in short, my dear, I went out and took the bus. - *ʕeef ɣaraḍ il-ʕaɛma - qaal quffit ɛiyuun [prov]* what could a blind man want more than a basket full of eyes? (said when s.th. longed for is offered). **2** bias, prejudice. *ʕif-firka kull-a-ha ʕaɣraaḍ* the company runs on favouritism. *ʕil-ɣaraḍ maraḍ [prov]* prejudice is a sickness. - *ʕaɣraaḍ* /pl n/ **3** movable belongings, personal effects.

مغرض *muɣriḍ* /adj */ biased. *ʕil-ḥakam ṭiliɛ muɣriḍ* the referee turned out to be biased.

غ ر غ ا ر

غرغار *ɣirɣaar: xaʃab ɣirɣaar [carp]* cheap poor quality wood such as is used as a base for inlay work.

غ ر غ ر

غرغر *ɣarɣar* /vi/ to gargle. - vn *ɣarɣara*; ava *miɣarɣar*.

غرغرة *ɣarɣara* /n/ gargle, liquid used for gargling.

اتغرغر *ʕitɣarɣar* /vi/ **1** = *ɣarɣar*. **2** (impersonal) passive of *ɣarɣar*. *ʕid-dawa da yitɣarɣar bii* this medicine is to be used as a gargle. - ava/iva *mitɣarɣar*.

غ ر غ ر ـ

غرغرينة *ɣarɣariina* <prob It *gangrena*> /n/ gangrene.

غ ر ف ^{1}

غرف *ɣaraf*^{1}, *ɣaraf*^{1} *(i)* /vt/ to serve or distribute (food) with a ladle or large spoon. *ɣarf if-furba fil-ʕaṭbaaq* ladling soup into bowls. *yalla ɛas-sufra maama ɣarafit il-ʕakl* up at the table! mother's dished out the food! ‖*law ruḥt il-kuweet tiqdar tiɣrif filuus zayy*^{i} *ma-nta ɛaayiz* if you went to Kuwait you'ld be able to rake in as much money as you wanted. - vn *ɣarf, ɣariif*; ava *ɣaarif*; pva *magruuf*.

غرف *ɣaraf*^{2}, *ɣaraf*^{2} *(u)* /vi/ to eat in large mouthfuls. *ʕinta b-tuɣruf leeh huwwa-nta f-sabaq* why are you gobbling down your food? do you think you're in a race? ‖*ʕuɣruf fil-mayya [naut]* hold water! - vn *ɣarf*; ava *ɣaarif*.

مغرفة *maɣrafa* /n pl *maɣaarif*/ **1** ladle, scoop. ‖*ḥalla w-huwwa maɣrafit-ha [prov]* (a cooking pot and he's its ladle) ≈ he knows the matter through and through. **2** ladleful. *kifaaya min iz-ziir maɣrafa [prov]* (one ladleful from the pitcher is enough) satisfy your needs modestly.

اتغرف *ʕitɣaraf, ʕitɣaraf* /vi/ passive of *ɣaraf*^{1} and *ɣaraf*^{2}. - ava/iva *mitɣirif*.

غ ر ف ^{2}

غرفة *ɣurfa*↑ /n pl *ɣuraf*/ room. *ɣurfit ɛamaliyyaat* operating theatre. *ʕil-ɣurfa t-tugariyya* the Chamber of Commerce.

غ ر ق

غرق *ɣiriq (a)* /vi/ **1** to sink in water, drown. *ʕil-markib ɣirqit* the ship sank. *ʕil-walad ɣiriq fit-tirɛa* the boy drowned in the canal. ‖*yiɣraq fi-fibr*^{i} *mayya [prov]* (he'd drown in a hand-span of water) ≈ he couldn't fight his way out of a paper bag. - *ɣiriq fi-maʃaakil* to become bogged down in problems. - *ɣarqaan fin-noom* fast asleep. - *ɣarqaan li-fuʃt-u fil-ḥubb* hopelessly in love. - *ɣiriq fil-kitaab* to become totally absorbed in the book. **2** to become soaked, became drenched. *qamiiṣ-i ɣarqaan damm* my shirt is soaked in blood. - vn *ɣaraq*; ava *ɣarqaan*.

غريق *ɣariiq* **1** /n */ drowned man. **2** /n, no pl/ deep water. *ʕil-wuqquuf fil-ɣariiq* treading water.

غرّق *ɣarraq* /vt/ **1** to submerge, drown. **2** to soak, drench, flood. *ʕin-naṭara ɣarraqit-hum* the rain soaked them. *ʕil-baḥr*^{i} *zaad wi-ɣarraq il-bilaad* the Nile rose and flooded the country. **3** to entangle, bog down. - vn *taɣriiq*; ava/pva *miɣarraq*.

اتغرّق *ʕitɣarraq* /vi/ **1** to be submerged, be drowned. **2** to be soaked, be drenched, be flooded. *bi-yistanna fil-ɣeeṭ li-ḥadd*^{i} *ma l-mayya tiigi wi-yitɣarraq* it stays in the field until the water comes and it is flooded. - ava/iva *mitɣarraq*.

استغرق *ʕistaɣraq* **1** /vt/ to take up, consume (time). *ʕil-ḥikaaya staɣraqit waqt*^{i} *ṭawiil* the matter took a long time. **2** (also *ʕistaɣraq*↑) /vi/ to be absorbed, be immersed (in s.th.). *laqeet-u mistaɣraq fil-kitaab* I found

him absorbed in (reading) the book. - ava *mistaɣraq*.

غ ر ل ي
غوريلا *ɣurilla* <perh Engl> /n pl *-aat*/ gorilla.

غ ر م [1]
غرم *ɣirim* or *ɣurum (a)* /vt/ to pay as an unwarranted expense. *ruḥt itʕaffeet fi-maṭʕam ɣirimt[i] xamsa gneeh* I went and had dinner in a restaurant and had to fork out five pounds. *ʕiḍ-ḍaamin ɣaarim [prov]* (it's the guarantor who pays up) don't stand as a guarantor; you'll pay for it. - vn *ɣaraama*; ava *ɣaarim, ɣarmaan*.
غرامة *ɣaraama* /n pl *-aat*/ **1** fine. *ʕilli yxaalif il-muruur yidfaʕ ɣaraama* those who violate the traffic laws have to pay a fine. **2** unwarranted expense. *ḥa-naaxud taks[i] maʕa ʕinnaha tibqa ɣaraama gamda* we'll take a cab even though it'll cost a bomb.
غريم *ɣariim* /n pl *ɣurama/* **1** adversary, opponent, antagonist. **2** *[obsol]* debtor or creditor.
غرّم *ɣarram* /vt/ **1** to fine. **2** to put to unwarranted expense, sting for a large sum. *bi-yilʕabu fil-ʕaddaad bi-yxalluu yigri zyaada ʕaʃaan yiɣarramuu-na* they fiddle with the meter and make it go faster than it should so that they can make us pay through the nose. - vn *taɣriim*; ava/pva *miɣarram*.
اتغرّم *ʔitɣarram* /vi/ passive of *ɣarram*. - iva *mitɣarram*.

غ ر م [2]
غرام *ɣaraam* /n/ passionate love. ‖ *ʔibn[i] ɣaraam* a fun-lover.
غرامي *ɣaraami* /adj/ pertaining to love. *riwaaya ɣaramiyya* romantic novel.
غراميّات *ɣaramiyyaat* /pl n/ romances, love affairs.
مغرم *muɣram* /adj */ fond (of), having a liking (for). *ʔil-fuqaha muɣramiin fatta* Koran-readers are partial to *fatta*. ‖ *muɣram ṣabaaba* madly in love.

غ ر ي [1]
غراء *ɣaraa'*. غرا *ɣira* /n/ **1** glue. **2** fixative.
غروي *ɣarawi[ʔ]* /adj/ **1** gluey, glutinous, viscous. **2** *[chem]* colloidal.
غرويّات *ɣarawiyyaat* /pl n/ *[chem]* colloids.
غرّاية *ɣarraaya* /n pl *-aat*/ vessel for melting or dispensing glue, glue-pot.
غرّى *ɣarra* /vt/ to glue. *waaḥid bi-ygammaʕ il-ʔagzaaʔ fi-baʕḍ[i] wit-taani bi-yɣarrii-hum* one assembles the parts and the other glues them. ‖ *xabuur miɣarri* (1) a nasty trick. (2) a tight spot, an awkward situation. - vn *taɣriyya*; ava/pva *miɣarri*.
اتغرّى *ʔitɣarra* /vi/ to be glued. *ʔil-ḥittiteen itɣarru f-baʕḍ* the two pieces were glued together. - iva *mitɣarri*.

غ ر ي [2]
أغرى *ʔaɣra* /vt/ to allure, tempt, seduce. *ʔil-ʔuguur ik-kibiira b-tiɣrii-hum yiftaɣalu fil-xaarig* the high pay lures them to work abroad. - vn *ʔiɣraaʔ*; ava *muɣri*.
إغراء *ʔiɣraaʔ* /n/ temptation. *malikit il-ʔiɣraaʔ* sex siren.
مغريات *muɣriyaat[ʔ]* /pl n/ attractions, allurements.

غ ر ي ب
غريّبة *ɣurayyiba* /coll n, pl *-aat*/ rich buttery biscuit(s) somewhat similar to shortbread.

غ ز ا ر
غزار *ɣuzaar* /coll n/ pigeon(s) of a breed distinguished by a very short beak.

غ ز ر [1]
غزارة *ɣazaara* /n/ abundance. *ɣazaara fil-ʔintaag* a high rate of production. *laazim titriwi b-ɣazaara* it has to be heavily irrigated.
غزير *ɣaziir* /adj/ abundant, thick, luxuriant. *ʃagar ɣaziir* dense bushy trees. *daqn[i] ɣaziira* a luxuriant beard. *maṭar ɣaziir* a downpour.
أغزر *ʔaɣzar[ʔ]* /el/ more/most abundant.

غ ز ر [2] see غ ز ا ر : *ɣuzaar*

غ ز ز [1]
غزّ *ɣazz (u)* /vt/ **1** to poke, prod (with s.th.). *ɣazz il-ḥumaar fi-ṛaqabi-u bil-ʕaṣaaya* he prodded the donkey in the neck with the stick. **2** to poke, insert (into s.th.). *ṣubaaʕ-i raaḥ maɣzuuz fil-ʕagiina* my finger sank into the dough. - vn *ɣazz, ɣazazaan*; ava *ɣaaziz*; pva *maɣzuuz*.
غزّة *ɣazza[1]* /inst n, pl *-aat*/ **1** a prod, a poke. **2** sudden sharp pain, stitch. *ga-k ɣazza* may you perish!
اتغزّ *ʔitɣazz* /vi/ to be poked, be prodded. - iva *mitɣazz*.
انغزّ *ʔinɣazz* = *ʔitɣazz*. - iva *minɣazz*.

غ ز ز [2]
غزّة *ɣazza[2]* /prop n/ Gaza.
غزّاوي *ɣazzaawi* **1** /adj */ of or pertaining to Gaza. **2** /n */ one from Gaza.

غ ز ز [3]
الغزّ *ʔil-ɣuzz* <T *Oğuz*> /coll n/ *[obsol]* the Ottoman ruling caste. ‖ *ʃaaxir xidmit il-ɣuzz[a] ʕalʃa [prov]* all the

thanks you get for serving a Turk is a beating.

غ ز غ ز
غزغز ʁazʁaz, ʁazʁiz /vt/ to poke or prod repeatedly. *fiḍil yiʁazʁaz il-ḥumaar lamma ḳammaṣ wi-waqqaʕ-u* he kept prodding the donkey till it bucked and threw him. - vn *ʁazʁaza*; ava/pva *miʁazʁaz, miʁazʁiz*.
اتغزغز ʃitʁazʁaz, ʃitʁazʁiz /vi/ to be poked repeatedly. - iva *mitʁazʁaz, mitʁazʁiz*.

غ ز ل [1]
غزل ʁazal[1] *(i)* /vt/ to spin. *bi-tiʁzil ṣuuf bil-maʁzal* she's spinning wool on the spindle. - vn *ʁazl*; ava *ʁaazil*; pva *maʁzuul*.
غزل ʁazl /n/ spun thread, yarn. ‖ *ʁazl il-banaat* candy floss, cotton candy. - *ʃitlaxbaṭ ʁazl-u* he became confused, he found himself at a loss. - *ʕeefa f-suuq il-ʁazl [prov]* ((a woman named) *ʕeefa* in the (crowded) yarn market) ≈ a needle in a haystack.
غزّال ʁazzaal /n pl *ʁazzaala*/ spinner.
غزّالة ʁazzaala /n pl *-aat*/ female spinner. ‖ *ʃil-ʁazzaala b-tiʁzil bi-rigl[i] ḥmaar [prov]* a (good) spinster can spin (even) with a donkey's leg.
مغزل maʁzal /n pl *maʁaazil*/ **1** spindle. ‖ *ʃabu maʁaazil* stork. **2** spinning-mill.
مغزلي maʁzali /adj/ spindle-shaped.
اتغزل ʃitʁazal /vi/ to be spun. - iva *mitʁizil*.
انغزل ʃinʁazal = ʃitʁazal. - iva *minʁizil*.

غ ز ل [2]
غزل ʁazal[2] *(i)* /vi/ to squint, look sideways. - vn *ʁazl, ʁazalaan*; ava *ʁaazil*.
غزّل ʁazzil /vi/ to lose consciousness, faint. ‖ *ʕenee ʁazzilit* the whites of his eyes showed and he fainted. - vn *taʁziil, ʁazalaan*; ava/pva *miʁazzil*.

غ ز ل [3]
غزل ʁazal[3] /n/ **1** addressing of endearments to girls, flirting with girls. **2** love poetry.
غازل ʁaazil /vt/ to address with endearments, flirt with. *ʕaam bi-salamt-u yʁaazil ig-gaww[i] btaaʕ-i* the smart-aleck had the cheek to flirt with my girl. *ʃil-ḥamaam bi-yṣawṣaw wi-bi-yʁaazil baʕḍ-u* the pigeons bill and coo to one another. - vn *miʁazla*; ava *miʁaazil*.
اتغازل ʃitʁaazil /vi/ passive of *ʁaazil*. - iva *mitʁaazil*.

غ ز ل [4]
غزال ʁazaal /n pl *ʁuzlaan, ʁizlaan*/ gazelle, (loosely also) deer. ‖ *ya ʁazaal* form of address to a pretty girl. - *ʃaḥmar damm il-ʁazaal* scarlet.

غزلاني ʁuzlaani, ʁizlaani **1** /adj/ gazelle-like (of the eyes). **2** *[callig]* script based on the *hamayooni* and *diwaani* styles (named after its originator, Ghuzlan Bey).
غزالة ʁazaala /n pl *-aat, ʁizlaan, ʁuzlaan*/ female gazelle. ‖ *bi-ʁazaala* temperamental, capricious. - *ʃilʕit ʕalee* (or *gat-lu*) *l-ʁazaala w-saafir* he got one of his whims and went abroad.

غ ز ل ن
غزلن ʁazlin /vi/ to lose consciousness, faint. - vn *ʁazlana*; ava *miʁazlin*.

غ ز و see [1] غ ز ى : ʁazwa

[1] غ ز ى
غزى ʁaza *(i)* /vt/ to invade. *ʃisraʃiil ʁazit siina* Israel invaded Sinai. - vn *ʁazw*; ava *ʁaazi*.
غزوة ʁazwa /inst n, pl *-aat*/ campaign of conquest (especially one of the early Islamic campaigns).
غازي ʁaazi[2] /n pl *ʁuzaah↑*/ invader.
غازية ʁaziyya /n pl *ʁawaazi*/ female dancer and singer (especially in rural areas). ‖ *ʃid-dinya zayy il-ʁaziyya - tirquṣ li-kull[i] waaḥid fiwayya [prov]* fortune is like a dancing-girl, it dances a little for everyone.
اتغزى ʃitʁaza /vi/ to be invaded. - iva *mitʁizi*.

[2] غ ز ى
مغزى maʁza /n/ meaning, import, significance, implication. *ya tara ʃeeh maʁza zyaarit ir-raʃiis il-mufagʃa l-rusya* I wonder what is the significance of the President's sudden visit to Russia. *kalam-ha ykayyif wi-luu maʁzaa* what she says is good to listen to and makes sense.

[3] غ ذ ى
غذاء ʁiza /n/ nourishment, nutrition. *ʃil-laban ʁiza kwayyis lil-ʃaṭfaal* milk is very nourishing for children.
غذائي ʁizaaʃi↑ /adj/ nutritional. *laha ʁiima ʁizaʃiyya faʃar il-laḥma* it has nutritional value that beats meat hollow.
أغذية ʃaʁziya↑ /pl n/ foodstuffs, victuals. *muʃassassit ṣinaaʕit il-ʃaʁziya* the General Organization for Foodstuffs.
غذّى ʁazza[3] /vt/ **1** to nourish, feed. *suuʃ it-taʁziya* malnutrition. **2** to feed, supply. *ʃis-silk[i] da bi-yʁazzi l-muḥarrik* this cable supplies the engine. - vn *taʁziya, taʁziyya*; ava/pva *miʁazzi*.
مغذّى muʁazzi /adj/ nourishing.
اتغذّى ʃitʁazza /vi/ passive of *ʁazza[3]*. - iva *mitʁazzi*.

غ س ل

غسل *ɣasal (i)* /vt/ **1** to wash. *bi-tiɣsil il-ɣasiil wi-tinʃur-u kull[i] yoom* she does the washing and hangs it out every day. *laazim tiɣsil sinaan-ak qabl[i] ma tnaam* you should brush your teeth before you go to bed. ‖*ɣasal-ha wi-nafar-ha* he made a public spectacle of her. **2** *[text]* to scour. *ʃil-ɣasiil wit-taghiiz* scouring and finishing. - vn *ɣasiil, ɣasl*; ava/pva *maɣsuul*.

غسيل *ɣasiil* /n/ **1** /vn/ wash, washing. ***kull-u yiṭlaʕ fil-ɣasiil*** *[prov]* it will all come out in the wash. ‖*ɣasiil il-ʃarḍ [agric]* flooding the land to remove salinity. - *ʕamaluu-lu ɣasiil muxx* they brainwashed him. - *ʕamaluu-lu ɣasiil miʕda* they cleared his stomach using a stomach-pump. **2** wash, laundry. *ḥ-alimm il-ɣasiil qabl il-maɣrib* I will take the laundry off the line before sunset. *ḥabl[i] ɣasiil* clothes line.

غسلة *ɣasla* /inst n, pl -*aat*/ a washing. ***niɣsil-ha ɣasla kwayyisa*** we give it a good wash(ing). *bi-tiḥsib-u ɣasliteen wi-b-taaxud minni tisʕiin ʕirf* she counts it as a double load of washing and charges me ninety piastres.

غسل *ɣusl* /n/ *[Isl]* ritual bathing. ***ɣusl il-mayyit*** washing of the dead in preparation for burial.

غسّالة *ɣassaala* /n pl -*aat*/ **1** washer-woman. **2** washing machine.

مغسلة *maɣsala* /n pl *maɣaasil*/ table on which corpses are washed.

اتغسل *ʃitɣasal* /vi/ **1** to be washed. **2** *[text]* to be scoured. - iva *mitɣisil*.

انغسل *ʃinɣasal* = *ʃitɣasal*. - iva *minɣisil*.

غسّل *ɣassil* /vt/ to wash (a corpse). ***ɣassilna l-marḥuum wi-kaffinnaa*** we washed the deceased and wrapped him in a shroud. ‖*ɣassil-u wi-ʕmil-lu ʕimma - qaal ʃana mɣassil wi-qaamin ganna [prov]* ('Wash him and put a turban on his head!' He said, 'Am I a corpse-washer, and a guarantor of Paradise?') ≈ you can only do so much to help people; they have to do some things themselves. - vn *taɣsiil*; ava/pva *miɣassil*.

مغسّل *miɣassil* /n */ corpse-washer.

مغسّلاتي *miɣassalaati* /n pl -*yya*/ = *miɣassil*.

اتغسّل *ʃitɣassil* /vi/ to be washed (of a corpse). - iva *mitɣassil*.

اغتسل *ʃixtasal* /vi/ *[Isl]* to perform the major ritual ablution (i.e. to wash the entire body). - vn *ʃixtisaal*; ava *muxtasil*.

غ ش ش

غش *ɣaʃʃ (i)* /vt/ **1** to cheat, deceive. *ʃil-gazzaar ɣaʃʃ iz-zibuun fil-mizaan* the butcher swindled the customer by giving him short weight. ‖*bidaal ma-tɣiʃʃ-u ʕul-lu f-wiʃʃ-u [prov]* (rather than deceive him, tell him to his face) ≈ it's better to tell a painful truth than to mislead. **2** to adulterate. *fii naas bi-tɣiʃʃ id-duxxaan* some people adulterate tobacco. *ʃil-laban il-yomeen dool maxʃuuf xaaliṣ* milk is very much watered down these days. **3** to counterfeit (money). *ʃil-filuus il-maxʃuuʃa ktiira fis-suuq* there's a lot of counterfeit money going around. — /vi/ **4** to cheat. *bi-tɣiʃʃ[i] f-liʕb il-kutʃiina* she cheats at cards. **5** to fall sick from eating the wrong, or dirty, food (of cattle and sheep). - vn *ɣiʃʃ, ɣaʃaʃaan*; ava *ɣaaʃiʃ*; pva *maxʃuuʃ*.

غشّاشي *ɣiʃaʃi* /n */ cheat, one who cheats.

غشّاش *ɣaʃʃaaʃ* /n */ cheat, one who cheats.

اتغشّ *ʃitɣaʃʃ* /vi/ passive of *ɣaʃʃ*. - iva *mitɣaʃʃ*.

انغشّ *ʃinɣaʃʃ* = *ʃitɣaʃʃ*. - iva *minɣaʃʃ*.

غشّش *ɣaʃʃiʃ* /vt/ to help to cheat, co-operate with in cheating. *ʃilli bi-yɣiʃʃ[i] wi-lli yɣaʃʃiʃ-u l-itneen ḥa-yitṭirdu mil-imtiḥaan* both he who cheats and he who helps him will be disqualified from the exam. - vn *taɣʃiiʃ*; ava/pva *miɣaʃʃiʃ*.

اتغشّش *ʃitɣaʃʃiʃ* /vi/ passive of *ɣaʃʃiʃ*. - iva *mitɣaʃʃiʃ*.

غ ش م

غشميّة *ɣuʃumiyya* /n/ naiveté, inexperience.

أغشم *ʔaɣʃam* /el/ **1** more/most naive of inexperienced. **2** more/most crude, raw etc.

غشيم *ɣaʃiim* /adj pl *ɣuʃm*/ **1** naive, inexperienced. *ma-tqul-f[i] ʕalayya ɣaʃiim da-na b-astaʕbaṭ bass* don't think I'm naive, I'm only acting silly. **2** crude, raw, unworked. *ḥadiid ɣaʃiim* crude iron. *ḥuṣaan ɣaʃiim* an untrained horse. *xaʃab ɣaʃiim [carp]* unworked timber.

غاشم *ɣaaʃim*↑ /adj/ brutal, oppressive, tyrannical, unjust.

اتغاشم *ʃitɣaaʃim* /vi/ to act stupidly or oafishly. - ava *mitɣaaʃim*.

استغشم *ʃistaɣʃam* or *ʃistaɣʃim* **1** /vt/ to consider unexperienced or oafish. /vi/ **2** to act stupidly or oafishly. - ava/iva *mistaɣʃim*.

غ ش ى

غشي *ɣiʃi: ɣiʃi ʕalee (ʕaleeha, ʕaleehum* etc.) he (she, they etc.) fainted or became unconscious. - vn *ɣaʃayaan*; pva *maɣʃi*.

غشيان *ɣaʃyaan* /adj/ unconscious, fainting.

غشاء *ɣiʃaaʔ* /n/ **1** cover. **2** membrane.

غشاوة *ɣiʃaawa* /n/ cover, covering, veil. ‖*ʃil-gahl[i] ɣaawa* ≈ ignorance is blind.

غ ص ب

غصب *ɣaṣab (i)* /vt/ to force, compel. *miʃ maʕquul ʃaɣṣib bint-i tiggawwiz* it's inconceivable that I should

force my daughter to marry. - vn *ɣaṣb*; ava *ɣaaṣib*; pva *maɣṣuub*.

غصب *ɣaṣb* /n/ force. ‖*bil-ɣaṣb* by force. *ʕaxaduu-ha minni bil-ɣaṣb* they took it from me by force.

¶ *ɣaṣbin ʕan* or *ɣaṣbᵃ ʕan* in spite of, despite. *ɣaṣbin ʕan ʕeen* ... against the will of ..., as in *ʕamal il-waagib bitaaʕ-u ɣaṣbin ʕan ʕeen-u* he did his homework under protest.

اتغصب *ʕitɣaṣab* /vi/ to be forced, be compelled. - iva *mitɣiṣib*.

انغصب *ʕinɣaṣab* = *ʕitɣaṣab*. - iva *minɣiṣib*.

اغتصب *ʕiɣtaṣab↑* /vt/ **1** to force, force open. *ʕiɣtaṣab il-ʕifl* he forced the lock. ‖*ʕiɣtaṣab diḥka* he forced a laugh. **2** to rape. - vn *ʕiɣtiṣaab*; ava *miɣtiṣib*; pva *muɣtaṣab*.

مغتصب *muɣtaṣib↑* /n */ raper, rapist.

غ ص ص

غصّة *ɣuṣṣa↑* /n pl *ɣuṣaṣ*/ a choking. ‖*wuguud-i zayy il-ɣuṣṣa f-ʕalb-u* my presence is unbearable to him.

اتغصّ *ʕitɣaṣṣ* /vi/ *[abus]* to be choked. *win-nabi titɣaṣṣ* by the Prophet, may you be choked! may you never say another word! - ava *mitɣaṣṣ*.

غ ص.ن

غصن *ɣuṣn↑* /n pl *ʕaɣṣaan, ɣuṣuun*/ branch (of a tree). ‖*ɣuṣn il-baan* epithet for a woman with a slender and graceful figure.

غ ض ب

غضب *ɣiḍib* or *ɣuḍub (a)* /vi/ **1** to become angry. *ɣiḍibtⁱ giddan lamma smiʕt inn il-walad siʔiṭ* I got furious when I heard that the boy had failed (his exam). *wiff-u baayin ʕalee l-ɣaḍab* he looks angry. **2** to become estranged from and leave one's husband. *hiyya baʔa-lha talat ʕasabiiʕ ɣaḍbaana ʕand axuu-ha* she's been three weeks estranged from her husband is and staying at her brother's. - vn *ɣaḍab*; ava *ɣaḍbaan*; pva *maɣḍuub*.

¶ *ɣiḍib ʕala* to turn down, refuse because of being offended. *ɣiḍbit ʕal-ʕariis illi gabuu liha* she turned down the suitor they brought for her. *saaʕit ma yitxaaniʔ yiɣḍab ʕal-ʕakl* whenever he quarrels he refuses to eat. ‖ *ʕinta ḫa-tiɣḍab ʕal-bayyaaʕ* ≈ I am not a salesman for you to act so choosy with me! (said, e.g., to one refusing an offer of help).

غضبة *ɣaḍba* /inst n, pl *-aat*/ fit of anger.

غضوبة *ɣuḍuuba* /n/ state of estrangement (between a husband and wife).

غضّب *ɣaḍḍab* /vt/ to cause (one's wife) to leave the house. - vn *taɣḍiib*; ava *miɣaḍḍab*.

اتغضّب *ʕitɣaḍḍab* /vi/ to be caused to leave the house (of a wife by her husband). - iva *mitɣaḍḍab*.

أغضب *ʔaɣḍab* /vt/ to anger, offend. *huwwa-na ʕamaltᵃ ḫaaga tiɣḍib rabb-i-na* did I offend God in any way?

غ ض ر ف

غضروف *ɣaḍruuf* /n pl *ɣaḍariif*/ gristle, cartilage.

غضروفي *ɣaḍruufi, ɣuḍruufi↑* /adj/ gristly, cartilaginous. ‖*ʕinzilaaq ɣaḍruufi* slipped disc, intervertebral disc protrusion.

غ ض ض

غضّ *ɣaḍḍ↑ (u): ɣaḍḍ in-naẓar ʕan* to disregard, ignore, forget about. *huwwa laazim yiɣuḍḍ in-naẓar ʕan ir-riḥla di* he should forget about this trip. *qarrart inni ʔaɣuḍḍ in-naẓar ʕan il-ʕariis da* I decided to refuse this suitor. - vn *ɣaḍḍ*; ava *ɣaaḍiḍ*; ava *maɣḍuuḍ*.

¶ *bi-ɣaḍḍ in-naẓar ʕan* regardless of, not to mention.

غ ط ر س

غطرسة *ɣaṭrasa* /n/ arrogance.

مغطرس *miɣaṭras* /adj */ arrogant.

اتغطرس *ʕitɣaṭras* /vi/ to act in a lordly way, swagger, strut. *ʕil-ʕamiil il-mitɣaṭras luu muʕaṃla xaṣṣa* the snobbish customer is given special treatment. - vn *taɣaṭrus*; ava *mitɣaṭras*.

غ ط س

غطس *ɣiṭis* or *ɣuṭus (a)* /vi/ **1** to submerge, dive. *fiḍiltⁱ ɣaaṭis xamas daʔaayiʔ* I stayed submerged five minutes. *bi-yiɣṭasu min ʕaʃara mitr* they dive from (a height of) ten metres. **2** to disappear, vanish. *ʕinta ɣaaṭis feen il-mudda di kull-a-ha* where have you been hiding yourself all this time? *ɣiṭis ma-ʔabbⁱ-ʃ* he disappeared without trace. - vn *ɣaṭs*; ava *ɣaaṭis, ɣaṭsaan*.

غطسة *ɣaṭsa* /inst n, pl *-aat*/ a dive.

غاطس *ɣaaṭis* /n/ *[naut]* draught (of a ship).

غطس *ɣuṭs* /n/ a quick swim, dip. *yalla niḍrab ɣuṭs* let's go in for a dip!

القطاس *ʔil-ɣuṭaas, ʔil-ɣiṭaas* /n/ *[Chr]* Epiphany.

غطيس *ɣaṭiis: ʔiswid ɣaṭiis* pitch black.

غطّاس *ɣaṭṭaas* /n */ **1** diver. ‖*ʔil-mayya tkaddib il-ɣaṭṭaas [prov]* (water gives the lie to the diver) ≈ the proof of the pudding is in the eating. **2** *ʔil-baḥr il-ɣaṭṭaas* the bottomless sea, in the magic formula: *ḫ-armii-k fil-baḥr il-ɣaṭṭaas wi-ma-ykun-lak-fⁱ la manga wala xalaaṣ* ≈ I'll throw thee (i.e. the evil eye) in the deep deep sea and not a soul can rescue thee (used in *raqw* to ward off the evil eye).

مغطس *maxtas* /n pl *mavaatis*/ **1** bathing tank (in a public bath). **2** *[Chr]* baptistry.

غطّس *vattas* **1** /vt/ to submerge, immerse. *fit-tanşiir il-qassiis bi-yvattas il-ɛayyil fil-mayya l-muqaddasa* during the baptism ceremony the priest immerses the baby in the consecrated water. **2** /vi/ to stay away for a while, disappear for some time. *ʃana miʃ ɛaarif ʃaxuu-ya mvattas feen baqaa-lu sana* I wonder where my brother has been hiding himself for the past year. - vn *tavtiis*; ava/pva *mivattas*.

اتغطّس *ʃitvattas* /vi/ to be submerged, be immersed. - iva *mitvattas*.

غ ط ط

غطّ *vatt (u)* **1** /vt/ to plunge, immerse. *vatt[i] ʃiid-u fil-ʃakl* he plunged his hand into the food. **2** /vi/ to fall fast asleep. - vn *vatt, vatatan*; ava *vaatit*; pva *mavtuut*.

اتغطّ *ʃitvatt* /vi/ to be plunged, be immersed. - iva *mitvatt*.

انغطّ *ʃinvatt* = *ʃitvatt*. - iva *minvatt*.

غ ط ى

غطاء، غطا *vata* /n pl *vutyaan*/ **1** lid, cover. *vata ɟizaaza* a bottle-top. *vata ganziir* a chain-guard. *vata sriir* a bed-cover. ‖*farʃ[i] w-vata* everything, as in *ʃil-ħubb[i] liyya l-farʃ[i] wil-vata* love is what I live for. - *ʃil-biir wi-vataa* (the well and its cover) all the details (of a secret), as in *ʃana ɛaarif il-biir wi-vataa* I know all there is to know about it. **2** *[mus] mawwaal* composed to cap a preceding *mawwaal*.

غطاء *vitaaʃ↑* /n/ cover, protection. *vitaaʃ gawwi* air-cover. *vitaaʃ in-naqd* currency backing.

غطّى *vatta* /vt/ **1** to cover. *vatti nafs-ak kiwayyis laħsan taaxud bard* cover yourself well or you'll catch cold. *li-vaayit il-mayya ma tvattii tamaam* until the water completely covers it. ‖*tavtiyyit it-turba [hort]* mulchings. - *kalaam mivatti* guarded speech. **2** to give cover to, give protection to. *ʃit-tayaraan mivatti g-geef* the air force is providing cover for the army. **3** *[journ]* to provide press coverage for. *miin illi ħa-yvatti ʃaxbaar il-ħadsa* who will cover the news of the accident? **4** to provide financial backing for. - vn *tavtiyya*; ava/pva *mivatti*.

اتغطّى *ʃitvatta* /vi/ **1** passive of *vatta*. *ʃil-tarabeeza mitvattiyya b-turaab* the table is covered with dust. **2** to cover oneself. *ʃitvatteet bil-battaniyya* I covered myself with the blanket. - ava/iva *mitvatti*.

استغطّى *ʃistavatta* /vi/ to cover oneself. *ʃistavatta mil-bard* wrap yourself against the cold! *ʃaadi d-dinya - ʃilli yistavatta biiha ɟiryaan* that's the world! whoever relies on it for shelter might as well be naked. - ava *mistavatti*.

غ ف ر [1]

غفر *vafar[1] (u, i)* /vt/ to grant forgiveness for (s.th.) *ɛaamil kida ɛaʃaan rabb-i-na yuxfur-lu zunuub-u* he does that so that God may forgive his sins. ‖*vafar allaah liina w-lukum* or *vafar allaah zamb-u-kum* or *zamb-u-kum maxfuur* replies to *yirħam-ak allaah* (said to one who sneezes). - vn *vufraan*; ava *vaafir*; pva *maxfuur*.

اتغفر *ʃitvafar[1]* /vi/ passive of *vafar[1]*. - iva *mitvifir*.

استغفر *ʃistaxfar* /vt/ to ask (God) for forgiveness. *ʃastaxfar allaah* God forgive me! (for doing such a thing, or if I ever did such a thing as you claim). - vn *ʃistixfaar*; ava *mistaxfar*.

غ ف ر [2]

غفر *vafar[2] (u)* /vt/ to guard; watch over. *ʃil-ɛasaakir bi-tuxfur il-maħallaat bil-leel* the police keep a watch on the shops at night. *ʃil-ɛumda xtaar waaħid gitta yuxfur-u* the mayor chose a well-built man to be his bodyguard. - vn *vafra*; ava *vaafir*; pva *maxfuur*.

غفير *vafiir* /n pl *vafar, vufara/* night watchman, guard. *vafar is-sawaaħil* the coast guards. *feex il-vafar* head watchman, chief guard. ‖*banaat vafar* ugly girls. - *sitt[i] feex vafar* ≈ a battle-axe, an ogress.

اتغفر *ʃitvafar[2]* /vi/ to be guarded, be watched over. - iva *mitvifir*.

غ ف ف

غفّ *vaff (i, u)* /vt/ to trick, take in. *ʃinta faakir ʃinnak ħa-tviff-i-ni b-kalaam-ak* do you think you're going to take me in with this talk of yours? - vn *vaff, vafafaan*; ava *vaafif*; pva *maxfuuf*.

اتغفّ *ʃitvaff* /vi/ to be tricked, be taken in. *ʃana tvaffeet fil-beeɛa di* I was tricked in this deal. - iva *mitvaff*.

انغفّ *ʃinvaff* = *ʃitvaff*. - iva *minvaff*.

استغفّ *ʃistavaff* = *vaff*. - ava *mistavaff*.

غ ف ق

غفّق *vaffaq* /vt/ *[constr]* to spread (cement) over bricks preparatory to plastering. - vn *taxfiiq*; ava/pva *mivaffaq*.

اتغفّق *ʃitvaffaq* /vi/ passive of *vaffaq*. - iva *mitvaffaq*.

غ ف ل

غفل *vifil (a)* /vi/ **1** to cease to be aware. *xud baal-ak mil-ħaraami - law vifilt[a] ɛannu dqiiqa ħa-yultuf maħfaẓt-ak* watch out for the thief - if you forget him for a minute, he'll swipe your wallet. **2** to nod off, drowse.

ʕeen-i ɣiflit ʕaʃar daqaayiq I nodded off for ten minutes. *ʕeen-i kaanit lissa ḥa-tiɣfal lamma g-garas ḍarab* I was just about to nod off when the bell rang. -vn *ɣafalaan, ɣafla*; ava *ɣaflaan*.

غفلة *ɣafla* /n/ **1** obliviousness, unawareness. ‖*ʕala ɣafla* all of a sudden, without warning, as in *daxal ʕala ɣafla* he suddenly came in, *ʃil-ʕarabiyya wiqfit ʕala ɣafla* the car stopped suddenly. *-ʕariis il-ɣafla [deris]* ≈ the sort of bridegroom who could only have been chosen because there was no one else left. **2** /pl *-aat*/ short sleep. *xadt*^{i} *ɣafla* I took a nap.

غفلان *ɣaflaan* /adj */ dull, oblivious.

غفّل *ɣaffil* **1** /vt/ to fool. *ʃinta ḥa-tɣaffil miin* who are you trying to fool? **2** /vi/ **2a** to close in drowsiness (of the eye). **2b** to drowse, nod off. *ɣaffilit wi-hiyya bi-titfarrag ʕat-tilivizyoon* she nodded off while watching the television. -vn *taɣfiil*; ava/pva *miɣaffil*.

تغفيل *taɣfiil* /n/ dullness of wit, stupidity.

مغفّل *muɣaffal* /adj */ dull, dim-witted. *ya muɣaffal (ʕala ʕenee-k)* you dimwit! *law kunna muɣaffaliin kaan yixuff*^{a} *ʕaleena k-kalam-da* if we were dumb we'd believe that.

اتغفّل *ʃitɣaffil* /vi/ to be fooled. -iva *mitɣaffil*.

استغفل *ʃistaɣfil* /vt/ **1** to select for dimwittedness. **2** to consider dimwitted. — /vi/ **3** to act the dimwit. -vn *ʃistiɣfaal*; ava *mistaɣfil*.

غ ف و

غفى *ɣifi (a)* /vi/ to nod off, snooze. *yadoob ɣifiit it-tilifoon ḍarab* I'd hardly nodded off when the telephone rang. -vn *ɣafw*; ava *ɣaafi*.

غفوة *ɣafwa*^{t} /n pl *-aat*/ nap, short sleep. *ḥ-axud-li ɣafwa* I'm going to take a nap.

غ ل ب

غلب *ɣilib* or *ɣulub (a)* /vi/ to suffer inconvenience or hardship. *miʃ ḥa-niɣlab* it's no trouble. *ɣilibt*^{i} *min kuwafeer li-kwafeer* I went through a lot trying to find a decent hairdresser. *ɣilbit min il-ʕilaag ʕand il-ḥukama w-raaḥit il-mustaffa* she suffered so much being treated by doctors that she (gave up and) went to the hospital. ‖*ɣilib ḥumaar-i* I give up, I'm stumped. -vn *ɣulb*; ava *ɣalbaan*.

غلب *ɣalab (i)* /vt/ **1** to overcome, gain domination over. *ʃin-noom ɣalab-ni* sleep overcame me. *ʃiṭ-ṭabʕ*^{i} *yiɣlib it-taṭabbuʕ [prov]* nature is stronger than nurture. *ʃil-bayyaaʕ kaan ʕaawiz yiffaṭṭar ʕalayya laakin ɣalabt-u* the salesman tried to outsmart me but I got the better of him. **2** to win. *miin ɣalab il-matʃ*^{i} *da* who won the match? ‖*ʃilli tiɣlib-bu ʃilʕab-bu [prov]* (what you win with, play with) ≈ (1) gamble only with your winnings. (2) choose the method most likely to achieve your ends. - *maɣluub ʕala ʃamr-u* resigned, helpless. — /vi/ **3** to preponderate. *yiɣlib ʕala ẓann-i ʃinn*^{i} *ʃaxuu-k huwwa lli xad-u* I am almost sure it is your brother who took it. -vn *ɣalabaan*; ava *ɣaalib*; pva *maɣluub*.

غلب *ɣulb* /n/ inconvenience, hardship, suffering. *rabb-i-na yaxd-u ʕafaan nirtaaḥ minnu w-min ɣulb-u* may Our Lord relieve us of him so that we may be free of him and all the bother he causes! *ya ɣulb-i y-aani* O Lord, I suffer! oh misery me! *ruḥt is-sinima ʃasalli ɣulb-i fwayya* I went to the cinema to forget my troubles for a while.

غلبان *ɣalbaan* **1** /adj * and pl *ɣalaaba*/ **1a** poor, needy. *ʃana ɣalbaan miʃ laaqi luqmit il-ʕeef* I'm a poor man who can hardly find a bite to eat. **1b** wretched, miserable. *di bitt*^{i} *ɣalbaana w-maksuurit il-ginaaḥ* she's a poor, defenceless girl. **2** /n * and pl *ɣalaaba*/ **2a** poor man, pauper. *niswaan il-ɣalaaba bi-yiftaɣalu fil-ɣeeṭ* the womenfolk of the poor work in the fields. **2b** poor soul, unfortunate wretch. *ʃir-raagil kaan wiff*^{i} *sguun wi-ma-yiffaṭṭar-ʃ*^{i} *ʃilla ʕala l-ɣalaaba* the man was a jail-bird and used to take advantage only of the poor wretches who couldn't defend themselves.

غالب *ɣaalib* **1** /n/ preponderance. ‖*ʃil-ɣaalib ʃinn* ... it is probable that .... *fil-ɣaalib* (1) usually, for the most part, as in *ʃil-biyuut ig-gidiida fil-ɣaalib tibqa dayyaqa* modern houses are usually small. (2) probable. *fil-ɣaalib ḥa-ysaafir bukra* he'll probably leave tomorrow. **2** /n */ winner. *ʃir-riyaaḍa ɣaalib wi-maɣluub* there's a winner and loser in every game.

¶ *ɣaaliban* /adv/ = *fil-ɣaalib*.

غلبة *ɣalaba* /n/ **1** inconvenience, bother, trouble. *ʃana muta ʃassif ʕala l-ɣalaba di* I'm sorry for (causing) this inconvenience. *di b-taaxud ɣalaba kbiira* it puts one to a lot of trouble. **2** idle chatter, prattle. *balaaf ɣalaba ʕaṣ-ṣubḥ* cut out all this prattle first thing in the morning! **3** fussy interfering, overbearing noseyness. ‖*ʃil-ɣalaba liiha ʃaḥkaam [prov]* ≈ there is no real defence against nosey people.

غلباوى *ɣalabaawi* /adj */ **1** talkative. *di ɣalabawiyya b-fakl* she's such a chatterbox! **2** fussily interfering, overbearingly nosey.

أغلب *ʃaɣlab* /el, in constr/ most of, the greater portion of, the majority of. *ʃaɣlab ik-kutub naqṣa* most of the books are lacking. *ʃaɣlab sukkan-ha mil-ʕummaal* most of its inhabitants are labourers. *fi-ʃaɣlab il-ʃaḥyaan* more often than not. *fi-ʃaɣlab il-ḥalaat* in most cases.

¶ *fil-ʕaɣlab* /adv/ (1) in most cases, usually. *bi-yiḫṣal fil-ʕaɣlab ʕinn il-ḥagga b-tilbis hiduum beeḍa* it is usual for a woman pilgrim to dress in white garments. (2) probably. *fil-ʕaɣlab miʃ ḥ-aqdar ʕaagi badri* I shall probably not be able to come early.

أغلبيّة *ʕaɣlabiyya* /n/ majority, greater portion. *ʕaɣlabiyyit il-ʕaʕṭaal min silk ik-kahraba* most of the breakdowns are owing to the electric wire. *ʕintuxib bi-ʕaɣlabiyya* he was elected by a majority. ‖*fil-ʕaɣlabiyya* (1) in most cases, usually. *fil-ʕaɣlabiyya l-maṣriyyiin bi-yfaḍḍalu l-xilfa ʂubyaan* Egyptians usually prefer to have male children. (2) probably. *fil-ʕaɣlabiyya d-dinya ḥa-tmaṭṭar in-nahar-da* it will probably rain today.

غلّاب *ɣallaab* /adj/ all-powerful, overwhelming. *ʕiṭ-ṭabʕ[i] ɣallaab* nature dominates nurture. *ʕil-hawa ɣallaab* love conquers all.

اتغلب *ʕitɣalab* /vi/ passive of *ɣalab*. -iva *mitɣilib*.

انغلب *ʕinɣalab* = *ʕitɣalab*. -iva *minɣilib*.

غلّب *ɣallib* /vt/ **1** to inconvenience, give trouble to. *ʂaawiz tisaafir bil-ʂarabiyya xud-ha laakin ḥa-tɣallib-ak fiwayya* if you want to go in the car, take it, but it will give you some trouble. *ʂayaa ɣallib-na* his illness has put us to a lot of trouble. **2**↑ to give greater weight to, consider preponderant. *ɣallibna l-iḫtimaal da ʂala l-iḫtimaal da* we gave greater weight to this probability than to that. -vn *taɣliib*; ava/pva *miɣallib*.

اتغلّب *ʕitɣallib* /vi/ **1** to gain mastery, triumph. *lamma yitɣallib ʂalee ṭabʕ-u ya ḥafiiẓ* when his (baser) nature gets the better of him, Lord protect us! *ʕitɣallibit ʂalee ʃahwit-u fa-ma-qdir-ʃ[i] yḫuuf nafs-u* his lust overcame him and he couldn't control himself. **2** to be put to inconvenience, be put to trouble. *yaama tɣallibt[i] f-ḥayaat-i* how much trouble I've had to put up with in my life! -vn *taɣallub*↑; ava/pva *mitɣallib*.

اتغالب *ʕitɣaalib* /vi/ **1** to talk at great length but to little point. **2** to be fussy and nosey and pretend to know a great deal. *qaʕad yitɣaalib ʂaleeha w-lamma ga door-u ma-ʂrif-ʃ[i] yiʂmil ḥaaga* he kept on giving her advice but when his turn came he couldn't do a thing. -iva *mitɣaalib*.

استغلب *ʕistaɣlib* **1** /vt/ to select for helplessness. **2** /vi/ to act the weakling. -vn *ʕistiɣlaab*; ava *mistaɣlib*.

غ ل ت

غلث، غلت *ɣalat* /coll n/ **1** weeds. **2** impurities (in, e.g., grain).

غلتة، غلتة *ɣalata* /unit n, pl *-aat*/ **1** a weed. **2** an impurity.

غلتاية *ɣalataaya* = *ɣalata*.

غلّت *ɣallit* /vt/ **1** to make weedy. **2** to weed (e.g., a field). *baʕd ir-ruzz ma yzarraʕ laazim tiɣallit-u* after the rice has sprouted you should weed it. — /vi/ **3** to become full of weeds. *ʕir-ruzz[i] maa-lu ɣallit kida* why has the rice become so full of weeds? -vn *taɣliit*; ava/pva *miɣallit*.

اتغلّت *ʕitɣallit* /vi/ passive of *ɣallit*. -iva *mitɣallit*.

غ ل ث see غ ل ت

غ ل س

غلس *ɣilis* /adj */ **1** obnoxious, irritating. **2** insensitive, crass.

غلاسة *ɣalaasa* /n/ **1** obnoxiousness. **2** insensitivity, crassness.

غلّس *ɣallis* /vi/ **1** to behave obnoxiously or irritatingly. **2** to behave insensitively or crassly. -vn *taɣliis*; ava *miɣallis*.

اتغلّس *ʕitɣallis* /vi/ (impersonal) passive of *ɣallis*. *ʕitɣallis ʂalayya* people were obnoxious to me. -iva *mitɣallis*.

استغلس *ʕistaɣlis* /vt/ **1** to consider obnoxious. **2** to select for obnoxiousness. — /vi/ to behave obnoxiously. -ava *mistaɣlis*.

غ ل ض see غ ل ظ

غ ل ط

غلط *ɣiliṭ* or *ɣuluṭ (a)* /vi/ to err, make a mistake. *ḥaasib tiɣlaṭ fil-ʂadd* take care not to make a mistake in counting! *ʕana ɣliṭ[i] fis-sikka* I took the wrong way. *miin il-ɣalṭaan* who's at fault? who's the culprit? -vn *ɣalaṭ*; ava *ɣalṭaan*.

¶ *ɣiliṭ fi-* or *ɣuluṭ fi-* (1) to wrong, offend against. *ɣilṭu f-ḥaqq-i* they wronged me. (2) to insult, be rude to. *ʂeeb - da ʕaxuu-k ik-kibiir ma-tiɣlaṭ-ʃ[i] fii* shame! he's your older brother and you shouldn't be rude to him.

غلط *ɣalaṭ* **1** /vn/ ‖*ʕil-ɣalaṭ marduud* ≈ no offence meant! **2** /n pl *-aat*/ error, mistake. *law waaḥid ḥaṣal minnu ʕayy[i] ɣalaṭ ḥa-yitrifid* if anyone does anything wrong, he'll be sacked. **3** /adj invar/ incorrect, wrong, mistaken. *da taṣarruf ɣalaṭ* this is the wrong way to behave, *nimra ɣalaṭ* a wrong (telephone) number. **4** /adv/ incorrectly. *bi-tiʂmil iʃ-ʃuɣl[i] ɣalaṭ* you are doing the work wrongly.

غلطة *ɣalṭa* /inst n, pl *ɣalaṭaat*/ mistake, error. *wiqiʕ fi-ɣalṭa* he slipped up. *ʕahi ɣalṭa w-miʃ ḥa-tikkarrar* it was indeed a mistake but it won't be repeated.

غلّاط ɣallaaṭ /adj */ foul-mouthed, rude. ‖*liʕbit il-ɣallaaṭa* card game in which the player tries to take as few cards as possible and discard as many as possible.

غلّط ɣallaṭ /vt/ **1** to attribute error to, accuse of being in the wrong. *tiɣallaṭ-ni ʃana leeh ʃiza kaan huwwa lli ɣalṭaan* why do you say I'm in the wrong when it's him? **2** to cause to make a mistake, confuse. *ɣallaṭ-ni min kutr[i] kalaam-u w-ʃana b-aftaɣal* he made me make a mistake by talking so much while I was working. - vn *taɣliiṭ*; ava/pva *miɣallaṭ*.

اتغلّط ʃitɣallaṭ /vi/ **1** to be accused of being in the wrong. **2** to be caused to make a mistake, be confused. - iva *mitɣallaṭ*.

غالط ɣaaliṭ /vt/ to cheat, deceive (s.o., over a bill or the like). *ʃig-gazzaar ɣaliṭ-ni f-sabʕiin ʔirf* the butcher swindled me out of seventy piastres. *ma-tɣaliṭ-ʃ[i] fik-kalaam* don't twist the conversation! - vn *miɣalṭa*; ava *miɣaaliṭ*.

اتغالط ʃitɣaaliṭ /vi/ to be cheated, be swindled. - iva *mitɣaaliṭ*.

استغلط ʃistaɣlaṭ /vt/ to consider in the wrong. *kull-i-na staɣlaṭnaa-k fik-kalaam illi ʔult-u* we all thought you were wrong in what you said. - vn *ʃistiɣlaaṭ*; ava/pva *mistaɣlaṭ*.

غ ل ظ

غلظ ɣiliẓ or ɣuluẓ *(a)* (also ɣiliḍ↓ or ɣuluḍ↓) /vi/ **1** to become deep, break (of a voice). **2** to become thick, bulky or heavy. **3** to become coarse or crass. *ʃaxuu ṭabʕ-u ɣuluẓ* his brother has become coarse-natured. - vn *ɣalaaẓa*; ava *ɣalẓaan*.

غلاظة ɣalaaẓa (also ɣalaaḍa↓) /n/ **1** deepness (of sound). **2** thickness. **3** coarseness, crassness.

غليظ ɣaliiẓ (also ɣaliiḍ↓) /adj pl *ɣulaẓa*/ **1** thick and heavy. *fuuma ɣaliiẓa* a stout cudgel. ‖*ʔalb-u ɣaliiẓ* he's hard-hearted. - *ʃil-muʃraan il-ɣaliiẓ [anat]* the large intestine. **2** deep, bass (of sound).

أغلظ ʔaɣlaẓ (also ʔaɣlaḍ↓) /el/ thicker/thickest, deeper/deepest etc.

مغلّظ *muɣallaẓ: yamiin muɣallaẓ↑* a binding oath. *nagaasa mɣallaẓa* (1) *[Isl]* something (e.g., faeces) contact with which constitutes a major ritual impurity. (2) something filthy and disgusting. *dool nagaasa mɣallaẓa* they're real dirt.

اغلظّ ʃiɣlaẓẓ = ɣiliẓ. - ava *miɣlaẓẓ*.

غ ل غ ل

اتغلغل ʃitɣalɣil /vi/ to penetrate. *fii talat dabbabaat tɣalɣilit fi-xṭuuṭ il-ʕaduw* there are three tanks that have penetrated behind enemy lines. *ʃil-ḥaḍaara l-faransiyya tɣalɣilit fi-maṣr* French culture spread in Egypt. - vn *taɣalɣul*; ava *mitɣalɣil*.

تغلغل *taɣalɣal↑* = *ʃitɣalɣil*. - vn *taɣalɣul*; ava *mutaɣalɣil*.

غ ل ف

غلفة ɣalafa /n pl *-aat*/ foreskin, prepuce. - also *ʔalafa*.

غلاف ɣilaaf, ɣulaaf /n pl *-aat, ɣilífa, ʃiɣlifa, ʃaɣlifa↑*/ cover, wrapper, casing. *ɣilaaf kitaab* book jacket. *ɣilaaf ʃisṭuwaana* record sleeve. *ɣilaaf dura* outer covering of a corn-cob.

غلّف ɣallif /vt/ to wrap, encase. *ʕaayiz ʃaɣallif ik-kitaab ʕaʃaan ma-yixsar-ʃ* I want to cover the book so that it doesn't get spoilt. - vn *taɣliif*; ava/pva *miɣallif*.

اتغلّف ʃitɣallif /vi/ to be wrapped, be encased. *ʃil-ʕidaan bi-titɣallif bi-ʃalwaaḥ il-markib* the ribs are encased by the planks of the boat. - iva *mitɣallif*.

غ ل ق [1]

مغلق maɣlaq /n pl *maɣaaliq*/ timber store.

غلّق ɣallaq /vt/ **1** to shut, close. *ɣallaqu l-maḥallaat kull-a-ha* they closed down all the shops. — /vi/ **2**↓ to finish all one's supplies, sell out. *ɣalaaṣ ɣallaqna* we're completely sold out. **3** to become hoarse (of the voice). *ṣoot-i ɣallaq mit-tahliil* my voice went hoarse with cheering. - vn *taɣliiq*; ava/pva *miɣallaq*.

اتغلّق ʃitɣallaq /vi/ to be shut, be closed. - iva *mitɣallaq*.

غ ل ق [2]

غلق ɣalaq /n pl *ɣulqaan, ɣulúqa, ɣilíqa*/ **1** small palm basket with handles (see Pl.B, 5). **2** oaf, twit.

غلّاق ɣallaaq /n pl *ɣallaaqa*/ one (e.g., a street-sweeper) who works with a *ɣalaq*.

غ ل ل [1]

غلّ ɣall[1] *(i)* /vt/ to yield. *ʃil-faddaan mil-ʔamḥ il-maksiiki bi-yɣill[i] xamastaafar ʃardabb[i] w-ʃaktar* each feddan of Mexican wheat yields fifteen ardebs and more. - ava *ɣaalil*.

غلّة ɣalla[1] /coll n/ **1** wheat. **2** yield (of a grain crop).

غلال ɣilaal↑ /pl n/ grains, cereals.

استغلّ ʃistaɣall /vt/ to utilize, take advantage of, exploit. *ʃis-sadd il-ʕaali ymakkin-na min istiɣlaal iṣ-ṣaḥra* the High Dam enables us to exploit the desert. *ʃistaɣalleet il-furṣa* I exploited the opportunity. *ʃistaɣallit noom-i w-xaragit* she took advantage of my being asleep and left. - vn *ʃistiɣlaal*; ava *mistaɣall, mustaɣill*.

استغلالى ʃistiɣlaali /adj * and pl *-yya*/ exploitative.

غ ل ل ²

غلّ ɣall² (i) /vt/ to irritate, anger, annoy. *ma-bi-yɣill¹-nii-ʃ qadd¹ ʃtimt-u fiyya* nothing infuriates me like his insults. - vn *ɣall*; ava *ɣaalil*; pva *maɣluul*.

غلّ ɣill /n/ ill-temper, spleen, rancour. *faʃʃeet ɣill-i f-miraat-i* I took my ill-temper out on my wife.

غلّاوى ɣillaawi /adj */ ill-tempered, splenetic, rancorous.

غليل ɣaliil = ɣill.

اتغلّ ʔitɣall /vi/ to be irritated, be angered, be annoyed. - iva *mitɣall*.

غ ل ل اية

غلّاية ɣallaaya¹ /n pl -aat/ *[print]* galley.

غ ل و see غ ل ى ¹ and غ ل ى ² : *ɣalwa, ɣalaawa*

غ ل و ش

غلوش ɣalwiʃ /vi/ **1** to make a loud noise in order to drown a softer one. *ɣalwiʃu ɛalayya fik-kalaam* they raised their voices so that my words couldn't be heard. *ʔir-radyu fii ɣalwaʃa* the radio is crackling. **2** to become muffled or fuzzy. *ɛeen-I ɣalwiʃit* my eyes became blurred. *ʔir-radyu ɣalwiʃ* the sound of the radio became indistinct. - vn *ɣalwaʃa*; ava *miɣalwiʃ*.

اتغلوش ʔitɣalwiʃ /vi/ **1** (impersonal) passive of *ɣalwiʃ* 1. *kull¹ ma kunt¹ b-aḥaawil ʔakkallim kaan bi-yitɣalwiʃ ɛalayya* every time I tried to talk I was shouted down. **2** to become muffled or blurred. - ava/iva *mitɣalwiʃ*.

غ ل ى ¹

غلى ɣili¹, ɣala¹ (i) /vi/ **1** to boil. *siib il-mayya tiɣli* leave the water to boil. **2a** to boil with anger. *qalb-i ɣili* I got furious. **2b** to bustle with activity. *ʔin-nahar-da l-burṣa b-tiɣli wiʃ-fuɣl[a] ɛala widn-u* today the Stock Exchange is humming with activity and the work never lets up. - vn *ɣalayaan*; ava *ɣaali, ɣalyaan*.

غلى ɣala² (i) /vt/ to boil. *ɣalet-laha kubbaayit ḥilba* I boiled her a glass of fenugreek. ‖ *ʔinta ya si zift¹ maɣli* you, you dirty rotter! - vn *ɣaly, ɣalayaan, ɣaliyya*; ava *ɣaali, ɣalyaan*; pva *maɣli*.

غليّة ɣaliyya **1** /vn/ ‖ *mayyit il-ɣaliyya* water in which laundry has been boiled. *ɛaṣaayit il-ɣaliyya* laundry stick (for stirring and extracting items from the copper). **2** /n/ laundry that is boiled (usually the white articles).

غلوة ɣalwa /inst n, pl -*aat*/ a boiling. *ʔil-ɛads il-muḥtaram yistiwi qawaam-ak min ɣalwa waḥda* good quality lentils cook straight off with one boiling. ‖ *ma-yaxud-ʃ¹ ɣalwa* it doesn't require much effort, as in *ʔid-dars il-ʔawwal ma-xad-ʃ¹ ɣalwa mɛaaya* the first lesson didn't cause me much trouble, *ʔinta ma-taxud-ʃ¹ ɣalwa mɛaaya* you're no match for me!

غلّاية ɣallaaya² /n pl -*aat*/ **1** pot for boiling, kettle. **2** boiler (e.g., in a steam engine).

اتغلى ʔitɣala /vi/ to be boiled. - iva *mitɣili*.

غ ل ى ²

غلى ɣili² (a) /vi/ **1** to go up in price, become more expensive. *ʔugrit id-dukkaan ɣilyit* the rent for the shop went up. *kull[a] ḥaaga fid-dinya ɣilyit ɣeer iṭ-ṭurʃi* everything in the world's gone up, except pickles. *qult-i-lu b-kaam da - qal-li ma-yiɣlaa-ʃ ɛaleeki ya nawwaara* I asked him, 'How much is that?' He replied, 'For you, blossom, not too much.' **2** to become dear, become beloved. *ɣilyit fi-ɛenay-ya* she became dear in my sight. - vn *ɣiliww, ɣuluww, ɣala, ɣalaawa*; ava *ɣaali*.

غلا، غلاء ɣala³, ɣalaaʔ /n/ expensiveness. *ɛalaawit il-ɣala* cost of living allowance. *ɣalaaʔ il-maɛiiʃa* the high cost of living. ‖ *ḥagaat bi-titbaaɛ bil-ɣala* things sold at high prices.

غلاوة ɣalaawa /n/ dearness, preciousness. ‖ *wi-ḥayaat ɣalawt-ak* by your dearness to me! by the love I have for you!

غالى ɣaali /adj */ **1** expensive. *bi-ybiiɛ bil-ɣaali* he sells at a high price. ‖ *ʔil-ɣaali taman-u fii [prov]* ≈ it pays to buy the best. - /adverbially/ *bi-ybiiɛ ɣaali* (1) he sells at a high price. (2) he plays hard-to-get. **2** dear, treasured, cherished. ‖ *ɣaali wiṭ-ṭalab rixiiṣ [prov]* you are so dear that anything you ask for seems cheap.

أغلى ʔaɣla /el/ **1** more/most expensive. *bi-ybiiɛ ʔaɣla mis-suuq* he sells at a higher price than the market. **2** more/most cherished, more/most dear. *da ʔaɣla ɛalayya min naẓar-i* he is more precious to me than my sight.

مغلواني miɣlawaani or maɣlawaani /n pl -*yya*/ one who overcharges.

غلّى ɣalla² /vt/ to raise, push up (prices). *ʔil-ʔazma ɣallit il-ʔasɛaar* the shortage pushed prices up. - vn *taɣliyya*; ava/pva *miɣalli*.

اتغلّى ʔitɣalla /vi/ to be raised (of prices). - iva *mitɣalli*.

غالى ɣaala↑ /vi/ to go to excess. *ma-tɣalii-ʃ fil-ʔasɛaar* don't ask for exorbitant prices. - vn *muɣalaah*; ava *miɣaali*.

اتغالى ʔitɣaala /vi/ **1** = *ɣaala*. **2** (impersonal) passive of *ɣaala*. *ʔil-mawḍuuɛ itɣaala fii zyaada ɛan il-lizuum* the matter was much exaggerated. - iva *mitɣaali*.

استغلى ʔistaɣla /vt/ **1** to consider (too) expensive. *ʔistaɣleena g-gild¹ fa-ʃtareena l-bilastik* we thought the leather was too expensive so we bought the plastic. **2** to

select for expensiveness. *ʃistaxla wi-ʃtiri* choose the most expensive and buy (it). - vn *ʃistixla*; iva *mistaxli*.

غ ل ى [3] see غ ل ل ا ى : *xallaaya* [1]

غ ل ى و ن

غليون *xalyuun* /n/ **1** smoker's pipe. **2** /pl *xalayiin*/ *[obsol]* galleon.

غ م ر [1]

غمر *xamar↑ (u)* /vt/ **1** to overwhelm. *xamaruu-ni b-riʕayit-hum* they overwhelmed me with care. **2** *[text]* to steep (cloth). **3** to flood. *ʃin-nahr[i] faaq wil-mayya xamarit ʃaraaqi ktiira* the river overflowed and the water flooded a lot of land. - vn *xamr, xamaraan*; ava *xaamir*; pva *maxmuur*.

مغمور *maxmuur↑* /adj */ obscure, little-known. *kaatib maxmuur* an obscure writer.

انغمر *ʃitxamar* /vi/ passive of *xamar*. - iva *mitximir*.

غمّر *xammar[1]* /vt/ to flood, inundate. *ʃin-nahar-da l-muzaariʕ bi-yxammar il-ʃarḍ[i] marra waḥda biṭ-ṭurumbaat* today the farmer floods the land at one go with pumps. - vn *taxmiir*; ava/pva *mixammar*.

اتغمّر *ʃitxammar[1]* /vi/ to be flooded, be inundated. - iva *mitxammar*.

غ م ر [2]

غمر *xumr, ximr* /n pl *ximaar*/ *[rur]* stook, shock (e.g., of straw, clover).

غمّر *xammar[2]* /vt/ to pile (e.g., straw, clover) into stooks or shocks. - vn *taxmiir*; ava/pva *mixammar*.

اتغمّر *ʃitxammar[2]* /vi/ passive of *xammar[2]*. - iva *mitxammar*.

غ م ر [3]

غامر *xaamir* /vi/ to take risks. *ʃil-waaḥid bi-yxaamir bi-ḥayaat-u ʕaʃaan yiʕaddi ʃ-ʃaariʕ* one takes one's life in one's hands to cross the street. - vn *muxaamra*; ava *mixaamir*.

مغامرة *muxaamra* /n pl *-aat*/ **1** risk, hazard. *balaaʃ tiʕmil muxamraat wi-tnuzz[i] min il-qaṭr[i] w-huwwa maaʃi* don't take risks by jumping from the train while it's moving. **2** escapade, adventure.

مغامر *muxaamir* /adj */ adventurous.

غ م ز

غمز *xamaz (i)* /vt/ **1** to nudge. *xamazit-ni ʕaʃaan m-atkallim-ʃ* she gave me a nudge to stop me speaking. **2** to make a furtive passing-on (of s.th.) to (s.o.). *xamazt-u b-gineeh* I slipped him a pound. — /vi/ **3** to wink. *bi-tixmiz li-miin* who are you winking at? *ʃiṣ-ṣunnaara xamazit* (1) the fishing-line twitched. (2) the victim has been hooked. - vn *xamz, xamazaan*; ava *xaamiz*; pva *maxmuuz*.

غمزة *xamza* /pl *-aat*/ instance noun of *xamz*.

غمّاز *xammaaz* /n pl *-aat*/ **1** blinker (light). **2** fishing float.

غمّازة *xammaaza* /n pl *-aat*/ **1** dimple. **2** *[mus]* (finger) key (of an instrument).

اتغمز *ʃitxamaz* /vi/ passive of *xamaz*. - iva *mitximiz*.

انغمز *ʃinxamaz* = *ʃitxamaz*. - iva *minximiz*.

غمّز *xammiz* /vt/ to nudge repeatedly. - vn *taxmiiz*; ava/pva *mixammiz*.

اتغمّز *ʃitxammiz* /vi/ to indicate one's scorn by winking and nudging. *ʃin-naas kull-a-ha b-titxammiz wi-titlammiz ʕaleeha* everyone's sneering at her and finding fault. - iva *mitxammiz*.

غ م س

غمس *xamas (i)* /vt/ to dip. *ʃixmis il-muus fil-muṭahhir qabl[i] ma tiḥlaq bii* dip the razor in antiseptic before you shave with it. - vn *xams*; ava *xaamis*; pva *maxmuus*.

غموس *xumuus* /n/ **1** eating of food using a piece of bread as a sop. **2** food eaten using a piece of bread as a sop. *min istaktar xumuus-u kal ḥaaf [prov]* (he who revels in the abundance of food he has to eat with his bread will one day have only dry bread to eat) ≈ extravagance leads to ruin.

اتغمس *ʃitxamas* /vi/ to be dipped. - iva *mitximis*.

انغمس *ʃinxamas* = *ʃitxamas*. ‖ *ʃinximaas is-salaṭiin fil-malazzaat* the sultans' wallowing in pleasures. - vn *ʃinximaas*; iva *minximis*.

غمّس *xammis* /vt/ to eat (food) using a piece of bread as a sop. *bi-yxammis il-fuul* he eats the beans by dipping bread into them. ‖ *sigaara mxammisa [slang]* cigarette packed with hashish. - vn *taxmiis*; ava/pva *mixammis*.

اتغمّس *ʃitxammis* /vi/ to be eaten with bread as a sop. *ʃiḥna l-xalaaba lli b-niksab luqmit-na mitxammisa bil-ʕaraq* we are the poor whose daily bread is sopping with the sweat of our brows. - iva *mitxammis*.

غ م ض

غمض *ximiḍ (a)* /vi/ **1** to close (of the eyes). **2** to become vague or mysterious. - vn *xamaḍaan*; ava *xaamiḍ, xamḍaan*.

غمض *xamaḍ (u)* /vt/ to close (the eyes). *ʕeen-i ma-ʃafit-ʃ il-xamḍ* I didn't get a wink of sleep. - vn *xamḍ*; ava *xaamiḍ*; pva *maxmuuḍ*.

غمضة *xamḍa* /pl *-aat*/ instance noun of *xamḍ*. ‖ *fi-xamḍit ʕeen* in the twinkling of an eye.

غامض *ɣaamiḍ* /adj */ obscure, mysterious. *ḥikaaya ɣamḍa* mysterious affair.

غمّيضى *ɣummeeḍi* /adv/ with the eyes closed, blindly. *bi-yiʃtiri ɣummeeḍi* he buys without inspecting the goods. *miʃ maʕquul waaḥid zayyak yiggawwiz ɣummeeḍi* it is inconceivable that someone like you should marry without first knowing the girl.

غمّض *ɣammaḍ* /vt/ **1** to close (the eyes). *ma-ḍdirt-ʃ ʃaɣammaḍ ʕeen-i wala sanya* I couldn't catch a wink of sleep. ‖ *ɣammaḍ ʕeen-(u) ʕan* to ignore, overlook. *-zayy il-ḍuṭṭa l-miɣammaḍa* (as innocent) as a blind kitten. **2** to blindfold. — /vi/ **3** to close (of the eyes). - vn *taɣmiiḍ*; ava/pva *miɣammaḍ*.

اتغمّض *ʃitɣammaḍ* /vi/ **1** to be closed (of the eyes). **2** to be blindfolded. - iva *mitɣammaḍ*.

غ م ق [1]

غمق *ɣimiḳ* or *ɣumuḳ (a)* /vi/ to turn dark, darken. *ʃil-ḍumaaʃ bi-yiɣmaḳ lamma tbill-u* the cloth turns a darker shade when you wet it. - vn *ɣamaḳaan, ɣumuḳiyya*; ava *ɣamḳaan*.

غامق *ɣaamiḳ* **1** /adj/ dark (of colour). *ʃaxḍar ɣaamiḳ* dark green. **2** *ɣawaamiḳ* /pl n/ dark-coloured items. *ʃiɣsili l-ɣawaamiḳ li-waḥdii-ha* wash the dark-coloured things separately.

أغمق *ʃaɣmaḳ* /el/ darker/darkest (in colour). *ʕayza loon ʃaɣmaḳ* I want a darker colour. *da ʃaɣmaḳ fi-xuḍrit-u ʕan il-maṣri* this is a darker green than the Egyptian type.

غمّق *ɣammaḳ* **1** /vt/ to make darker, darken. *ɣammaḳ il-ʃarḍiyya ʕaʃaan ir-rasma tbaan* darken the background so that the design stands out. **2** /vi/ to turn dark. - vn *taɣmiiḳ*; ava *miɣammaḳ*.

اتغمّق *ʃitɣammaḳ* /vi/ to become or be made darker. - ava/iva *mitɣammaḳ*.

اغمقّ *ʃiɣmaḳḳ* = *ɣimiḳ*. - ava *miɣmaḳḳ*.

استغمق *ʃistaɣmaḳ* /vt/ **1** to select for darkness. **2** to consider (too) dark. - vn *ʃistiɣmaaḳ*; ava *mistaɣmaḳ*.

غ م ق [2]

غمقيّة *ɣumḳiyya* (also *ɣunḳiyya*) /n pl *ɣamaaḳi, ɣanaaḳi*/ *[naut]* one of the short ribs on either side of a stem.

غ م م

غمّ *ɣamm [1] (u)* /vt/ **1** to depress, make gloomy. *ʃil-ḥikaaya di ɣammit-ni* this affair depressed me. *manẓar yiɣumm* a depressing sight. **2** to revolt, sicken. *riiḥa tɣumm* a revolting smell. - vn *ɣamm, ɣamamaan*; ava *ɣaamim*; pva *maɣmuum*.

¶ *ʃin-nifs [1] ɣammit ʕala ...* a feeling of queasiness overcame .... *nifs-a-ha ɣammit ʕaleeha* she felt queasy.

غمّ *ɣamm [2]* /n/ depression, gloom. *ʃakl-ak baayin ʕalee l-ɣamm* you look depressed. *ḥa-tiḳlibi l-ḳaʕda ɣamm* are you going to spoil the gathering with your gloominess?

غمّة *ɣamma [1]* /n pl *-aat*/ instance noun of *ɣamm*.

غمامة *ɣimaama, ɣumaama* /n pl *-aat*/ **1** blindfold. **2** obstruction to the sight. *ʃana ḥaasis zayy [i] ma ykuun fii ɣimaama ʕala ʕeen-i* I feel as though something is clouding my vision.

غمام *ɣamaam* /coll n/ clouds.

غمامة *ɣamaama* /unit n, pl *-aat*/ a cloud. ‖ *ʃil-muẓallal bil-ɣamaama* the One Shaded by the Cloud (epithet of the Prophet Muhammad).

اتغمّ *ʃitɣamm* /vi/ to feel depressed, feel sad. - ava *mitɣamm*.

انغمّ *ʃinɣamm* = *ʃitɣamm*. - ava *minɣamm*.

غ م ى

غمى *ɣumi (i): ɣumi ʕalee (ʕaleeha, ʕaleehum* etc.) he (she, they etc.) fainted. *ɣumi ʕala ʃuxt-i lamma simʕit il-xabar* my sister fainted when she heard the news.

غمى *ɣuma* /n/ blindfold for an animal (worn, e.g., when turning a water-wheel).

غمّى *ɣamma [2]* /vt/ to blindfold, blinker. - vn *taɣmiyya*; ava/pva *miɣammi*.

مغمّى *miɣammi* /adj */ **1** blindfolded, blinkered. **2** inexperienced, naive.

اتغمّى *ʃitɣamma* /vi/ to be blindfolded, be blinkered. - iva *mitɣammi*.

أغمى *ʃuɣma: ʃuɣma ʕalee (ʕaleeha, ʕaleehum* etc.) he (she, they etc.) fainted. *laʕeet-u muɣma* (or *muɣmi*) *ʕalee* I found him in a faint. - vn *ʃiɣmaaʃ, ʃiɣma*; pva *muɣma, muɣmi*.

استغمّى *ʃistiɣamma* /vi/ to put on a blindfold. - ava *mistiɣammi*.

أستغمّاية *ʃustuɣummaaya* or *ʃistuɣummaaya* /n/ (the game of) hide and seek.

غ ن ج [1]

غنج *ɣanag (u)* /vi/ *[coarse]* to utter sounds during sexual intercourse to indicate pleasure and enthusiasm (of a woman). - vn *ɣang, ɣung*; ava *ɣaanig*.

غنجيّة *ɣunagiyya* /fem adj, pl *ɣunagiyyiin*/ = *ɣannaaga*.

غنّاجة *ɣannaaga* /fem adj, pl *ɣannagiin*/ *[coarse]* expressing her pleasure in and enthusiasm for sexual intercourse by the use of certain sounds. *ʃil-miḥtaaga ɣannaaga [prov]* ≈ when you want something it shows in your actions.

غ ن ج [2] see غ ن ن و ج : *ɣannuug*

غ ن ج و
غنجو *ɣangu* <It *gancio*> /n/ hook.

غ ن د ر
غندر *ɣandar* /vt/ to adorn, make fancy. *ʃaxuu-k ɣandar nafs-u min yoom ma ʃtaɣal fit-tilivizyoon* your brother has made himself a dandy since he started working in television. - vn *ɣandara*; ava/pva *miɣandar*.
غندور *ɣanduur, ɣanduur* /n pl *ɣanadra*/ dandy, fop.
غندورة *ɣanduura, ɣanduura* /n pl *-aat*/ coquette.
اتغندر *ʃitɣandar* /vi/ to become a dandy, become a fop. - ava *mitɣandar*.

غ ن ف ا ر
غنفارى *ɣinfaari* /adj/ cut on the bias.

غ ن ق see غ م ق [2] : *ɣunqiyya*

غ ن م
غنم *ɣanam* /coll n, pl *ʃaɣnaam*/ 1 sheep. ‖*ɣanam baladi* white sheep. - *ɣanam ḥamra* brown sheep. 2 mixed flock(s) of sheep and goats. ‖*qaal ya guḥa ʕidd[i] ɣanam-ak - qaal waḥda nayma w-waḥda qayma [prov]* someone said, 'Goha, count your flocks!' Goha replied 'One's lying down, the other's standing up.' (of something too small in number to need counting).
غنمة *ɣanama* /unit n, pl *-aat*/ a sheep.
غنماية *ɣanamaaya* = *ɣanama*.
غانم *ɣaanim: saalim ɣaanim* see *saalim*.
غنيمة *ɣaniima[ʕ]* /n pl *ɣanaayim*/ booty.
غنّام *ɣannaam* /n pl *ɣannaama*/ sheep- and goatherd.
غنّم *ɣannim* /vt/ to cause to gain. *rabb-i-na yɣannim-ak is-salaama* may God grant you safety! - vn *taɣniim*; ava/pva *miɣannim*.
اتغنّم *ʃitɣannim* /vi/ passive of *ɣannim*. - iva *mitɣannim*.

غ ن ن
غنّ *ɣann[1] (u)* /vt/ *[ling]* to nasalize (certain sounds) in reading the Koran. - vn *ɣann*; ava *ɣaanin*.
غنّ *ɣann[2]* /n/ *[ling]* nasalized pronunciation of certain sounds in Koranic recitation.
غنّة *ɣunna* /n pl *-aat*/ a nasalized sound according to traditional Koranic recitation.
اتغنّ *ʃitɣann* /vi/ passive of *ɣann*. - iva *mitɣann*.

غ ن ن و ج
غنوج *ɣannuug: baaba ɣannuug* dip made of sesame paste, garlic and mashed roasted egg-plant.

غ ن و see غ ن ى [1] : *ɣinwa, ɣinneewa*

غ ن ى [1]
غنا، غناء *ɣuna* /n/ singing. *ʃir-raqṣ[i] wil-ɣuna* dancing and singing. ‖*makanit ɣuna [obsol]* record-player.
غنائى *ɣinaaʃi[ʕ]* /adj/ pertaining to song, vocal. *muʃallafaat ɣinaʃiyya* vocal works.
غنوة *ɣinwa* /n pl *-aat*/ (lyrical) song.
غنّيوة *ɣinneewa* /n pl *-aat*/ (lyrical) song.
أغنية *ʃuɣniyya, ʃuɣniya* /n pl *-aat, ʃaɣaani*/ (lyrical) song.
مغنى *maɣna* /n/ song, singing. *qaḍḍeena leela kull-a-ha maɣna w-ṭarab* we spent a night full of song and enjoyment.
غنّى *ɣanna* 1 /vt/ to sing. *ḥa-tɣanni ɣinwa gdiida l-lelaa-di* she will sing a new song tonight. 2 /vi/ to sing. *qaaʕid yiɣanni fil-ḥammaam* he's singing in the bathroom. - ava/pva *miɣanni*.
¶ *ɣanna ʕala* to string along, feed a line to. *ɣanneet ʕalee li-ɣaayit ma xadt il-fuluus minnu* I strung him along till I got the money from him. — *ɣanna bi-* to sing the praise of, extol. *kull-i-na bi-nɣanni b-gamaal maṣr* we all extol the beauty of Egypt.
مغنّى *muɣanni* /n */ singer.
مغنّاوى *miɣannaawi* /n pl *-yya, miɣannawiin, miɣannawiyyiin*/ = *muɣanni*.
مغنّواتى *miɣannawaati* /n pl *-yya*/ folk singer.
اتغنّى *ʃitɣanna* /vi/ to be sung. *ʃil-ɣinwa di tɣannit ziyaada ʕan il-lizuum* this song has been sung too many times. - iva *mitɣanni*.
¶ *ʃitɣanna bi-* to sing the praise of. *ʃibn-a-ha lli ʧuul ʕumr-a-ha b-titɣanna bii maat fil-ḥarb* her son whom she always idolized died in the war. - *ʃitɣanna ʕala* (impersonal) passive of *ɣanna ʕala*. *ʃana miʃ mi-lli b-yitɣanna ʕaleehum* I'm not one to be fooled.

غ ن ى [2]
غنى *ɣana (i)* /vt/ to make wealthy, enrich. *ʃil-ḥarb[i] ɣanit-hum* the war made them wealthy. *rabb-i-na yiɣnii-k* may Our Lord make you rich! (expression of gratitude). - vn *ɣina, ɣanayaan*; ava *ɣaani*; pva *maɣni*.
¶ *ɣana ʕan* to free from, allow to dispense with. *ʃik-kutub tiɣnii-k ʕan is-safar* reading is as good as travelling. *ḥaal-i yiɣni ʕan suʃaal-i* my condition speaks for itself.
غنى *ɣina* 1 /vn/ ‖*(da) ɣina ʕan* (it) allows one to dispense with, as in *maknasit ik-kahraba ɣina ʕan il-*

xaddamiin a vacuum cleaner allows one to do without servants. *laa ʏina ɛan* there is no dispensing with, as in *ma-luu-ʃ ʏina ɛanha* he can't do without her. **2** /n/ wealth, riches. *ʃiş-şiit wala l-ʏina* fame (for one's riches) counts for more than (the) riches (themselves).

غانية *ʏaaniya*↑ /n pl *ʏawaani*/ **1** coquette. **2** prostitute.

غنى *ʏani* **1** /adj pl *ʏunaay, ʃaʏniya*/ wealthy, rich. *ʃarḍ*^{i} *ʏaniyya bil-fusfuur* land rich in phosphorus. *ʃil-ʏani ʏannuu-lu wil-faqiir mineen yiruḥuu-lu [prov]* people sing for the rich but won't even admit to knowing the way to a poor man's house. **2** /n/ Self-sufficient One (epithet of God). ‖ *ʃallaahu l-ʏani* (God is the Self-sufficient) ≈ you can be done without! as in *miʃ ḥa-tsaɛid-ni - maɛa s-salama ʃallaahu l-ʏani (ɛannak)* you won't help me? leave me alone then, I can do it without you!

أغنى *ʃaʏna*^{1} /el/ richer/richest.

اتغنى *ʃitʏana* /vi/ to become or be made rich or wealthy. - ava/iva *mitʏini*.

¶ *ʃitʏana ɛan* to be spared, be relieved of, be allowed to dispense with. *ʃil-ḥamdu li-llaah ʃinnina tʏaneena ɛan il-ḥikaaya di* thank heavens we were spared that!

أغنى *ʃaʏna*^{2} = *ʏana*.

¶ *ʃaʏna ɛan* = *ʏana ɛan*.

استغنى *ʃistaʏna* /vi/ to (be able to) do without. *ʃiḥna ma-nistaʏnaa-ʃ ɛan baɛḍii-na* we can't do without each other. *mumkin tistaʏna ɛan ik-kitaab ʃiwayya* can you spare the book for a while? ‖ *ʃinta mistaʏni ɛan ɛumr-ak tiɛmil kida* are you mad to take a risk like that? - *ma-nistaʏnaa-ʃ* formula of polite refusal or excuse, as in *ʃayy*^{i} *xidma tanya - la ma-nistaʏnaa-ʃ* 'Anything else?' 'You are very kind, but no. , *ma-nistaʏnaa-ʃ - ʃana b-akallim is-sayyid illi waraak* I'm sorry, I wasn't talking to you, but to the gentleman behind you. - vn *ʃistiʏna*; ava *mistaʏni*.

غ و ت see غ ى س : *ʏaat*^{1}, *muxiit*

غ و ث see غ ى س

غ و ر

غار *ʏaar*^{2} *(u)* /vi/ **1** *[abus]* to go away, beat it. *ʏuur min wiff-i* get the hell out of my sight! *ʏaarit fi-sittiin dahya* she's gone away (and good riddance). ‖ *tiʏuur il-ɛoora b-faddan-ha [prov]* (let the one-eyed girl go to hell with her acre) ≈ never marry an ugly girl, no matter how rich! - *ʏaar if-firk* to hell with going partners. **2**↑ to go in deep, penetrate far. *ʃil-qunbula ʏaarit fil-ʃarḍ* the bomb penetrated deep into the ground. *ʃis-silaaḥ ʏaayir fil-laḥm* the blade is deeply embedded in the flesh. ‖ *ḍufr*^{i} *ʏaayir* an ingrowing nail. - vn *ʏawaraan*; ava *ʏaayir*.

غار *ʏaar*^{3} *(i)* /vi/ to make a raid. - ava *ʏaayir*.

غور *ʏoor* /n pl *ʃaʏwaar*/ depth.

غار *ʏaar*^{4} /n/ cave.

غارة *ʏaara* /n pl *ʏaraat*/ raid. *ʏaara gawwiyya* air raid.

الغوريّة *ʃil-ʏuriyya* /prop n/ street and the area around it extending from el-Azhar Street to Bab Zuweila and containing markets and a number of historic monuments.

مغارة *maʏaara* /n/ **1** /pl *-aat*/ cave. **2** /no pl/ *[Chr]* stable of the Nativity.

اتغار *ʃitʏaar*^{1} /vi/ (impersonal) passive of *ʏaar*^{3}. *ʃayy*^{i} *hadaf mumkin yitʏaar ɛalee* any target may be raided. - iva *mitʏaar*.

أغار *ʃaʏaar*↑ /vi/ to make a raid. - vn *ʃiʏaara*; ava *muʏiir*.

غ و س see غ ى س : *ʃil-ʏoos*

غ و ش see غ و ى ش : *ʏiweeʃa*

غ و ص

غاص *ʏaaṣ (u)* /vi/ to go deep, submerge oneself. *laazim il-ʏawwaaṣa tʏuuṣ taḥt il-ʃalʏaam* the submarine has to dive below the mines. *ʏuṣna fil-mawḍuuɛ* we went deeply into the subject. *ɛaaɛid ʏaayiṣ fik-kursi* sitting sunk deep down in the chair. - vn *ʏooṣ, ʏawaṣaan*; pva *ʏaayiṣ*.

غوّاص *ʏawwaaṣ* /n pl *ʏawwaaṣiin, ʏawwaaṣa*/ (deep-sea) diver.

غوّاصة *ʏawwaaṣa* /n pl *-aat*/ submarine.

غ و ط

غوط *ʏiwiṭ (a)* /vi/ to become deep, deepen. *ʃil-ḥufra ʏiwṭit ɛal-ḥabl* the hole became too deep for the rope (to reach the bottom). - vn *ʏiwṭ, ʏawaṭaan*.

غوط *ʏiwṭ, ʏuwṭ* /n pl *ʃaʏwaaṭ*/ depth.

غويط *ʏawiiṭ* /adj * and pl *ʏiwaṭa*/ **1** deep. *nuqra ʏawiiṭa* a deep hole. *ʃil-baḥr*^{i} *hina ʏawiiṭ* the sea is deep here. **2** crafty, sly and secretive. — *ʃil-ʏawiiṭ* /n/ **3** deep water. *ʃana ḥ-aɛuum fil-ʏawiiṭ* I'm going to swim where it's deep.

أغوط *ʃaʏwaṭ* /el/ **1** deeper/deepest. **2** more/most crafty, sly or secretive.

غوّط *ʏawwaṭ* **1** /vt/ to make deep(er), deepen. *ʏawwaṭ il-ḥufra* deepen the hole. **2** /vi/ to go deep. *ʏawwaṭna fig-gabal* we went deep into the desert. *ʏawwaṭ fil-*

mawḍuuʕ he delved deeply into the subject. - vn *taɤwiiṭ*; ava/pva *miɤawwaṭ*.

اتغوّط *ʔitɤawwaṭ* /vi/ to be deepened. - iva *mitɤawwaṭ*.

استغوط *ʔistaɤwaṭ* /vt/ **1** to consider (too) deep. **2** to select for being deep. - vn *ʔistiɤwaaṭ*; ava *mistaɤwaṭ*.

غ و ل

غول *ɤuul* /n pl *ɤilaan*/ ghoul. ‖ *bi-yaakul ʒayy il-ɤuul* ≈ he eats like a horse.

غولة *ɤuula* /n pl *ɤilaan*/ female ghoul. ‖ *ʔumm-i-na l-ɤuula* or *ʔumm il-ɤilaan* mother *ɤuula* (in children's stories). - *miin yiqdar yiquul lil-ɤuula ʕeen-ik ḥamra [prov]* who dares tell the *ɤuula*, 'Your eye is red'?

غوّل *ɤawwil* /vi/ **1** to extend, spread, branch out. *tisiib iz-zarʕ*[a] *ʕala ṭabiʕt-u yɤawwil* if you leave the plants untended they bush out. *ɤawwil fil-mafy*[i] *min ɤeer ma yḥiss* he walked too far without realizing it. **2** to make inroads. *ɤawwil fil-ʔakl* he consumed quantities of food. - vn *taɤwiil*; ava *miɤawwil*.

اتغوّل *ʔitɤawwil* = *ɤawwil*. - ava *mitɤawwil*.

استغول *ʔistaɤwil* **1** /vt/ to consider gluttonous. **2** /vi/ to encroach, make advances. *ʔistaɤwil fil-ʔakl* he got through huge quantities of food. - ava *mistaɤwil*.

غ و ى

غوى *ɤiwi (a)* /vt/ to become keen on, become enthusiastic about, delight in. *ʔana b-aɤwa t-tadriis* I love teaching. - vn *ɤawayaan*; ava *ɤaawi*.

غوى *ɤawa (i)* /vt/ to tempt, lure. *ɤawaa-ha b-filuus-u* he tempted her with his money. - vn *ɤayy*; ava *ɤaawi*; pva *maɤwi*.

غاوى *ɤaawi* /n/ enthusiast, devotee, fan. *ɤaawi koora* one who likes (playing or watching) football. *ʔil-ɤaawi ynaqqaṭ bi-ṭaqiyt-u [prov]* (the fan will donate his skullcap) ≈ an enthusiast will give away everything he has for what he loves.

غيّة *ɤiyya* /n pl *-aat*/ **1** liking, inclination, fancy. *ʔabuu-ya lu ɤiyya fis-simiin* my father has a liking for fat. *kaan ɤiyya ʒamaan* it was a fad in the old days. **2** hobby. *lu ɤiyya fis-sibaaq* he's a race-goer. *ɤiyyit-u gamʕ iṭ-ṭawaabiʕ* his hobby is stamp collecting. **3** flock (e.g., of pigeons) kept as a hobby and not for eating. — /adj invar/ **4** kept as a hobby (of, e.g., pigeons).

اتغوى *ʔitɤawa* /vi/ to be tempted, be lured. - iva *mitɤiwi*.

أغوى *ʔaɤwa*↑ = *ɤawa*. - vn *ʔiɤwa*; ava *miɤwi*.

غ و ى ش

غويشة *ɤiweeʃa* /n pl *-aat, ɤawaayiʃ*/ **1** bracelet. **2** keyhole cover.

غ ى ب [I]

غاب *ɤaab*[2] *(i)* /vi/ **1** to absent oneself. *ʔil-ʔustaaz ɤaab ʔusbuuʕ* the teacher was away for a week. ‖ *ɤaab il-quṭṭ ilʕab ya faar [prov]* ≈ when the cat's away, the mice will play. **2** to take (a long) time. *ḥa-tɤiib* will you be long? *raaḥ daaxil lil-maʔmuur ɤaab laḥẓa w-xarag* he went in to the superintendent, was away a moment and then came out again. *ʔir-ruxṣa bi-tɤiib ʕa-baal ma tiṭlaʕ* the licence takes a long time to be issued. - vn *ɤiyaab, ɤayabaan, ɤeeba*; ava *ɤaayib*.

¶ *ɤaab ʕan* to slip the memory of, be overlooked by. *ʔil-mawḍuuʕ da kaan ɤaayib ʕanni* I'd forgotten about that.

غياب *ɤiyaab* /n/ absence. *xad-u ɤiyaab* he marked him as absent.

غيابي *ɤiyaabi* /adj/ *[leg]* in absentia. *ḥukm*[i] *ɤyaabi* sentence (passed) in absentia. - /adverbially/ *ma-tuḥkum-ʃ*[i] *ɤyaabi* don't pass judgements before examining facts.

غيبة *ɤeeba* /n/ **1** absence. *ɤebt-ak il-marra di ṭawwilit* you were away for a long while this time. ‖ *ɤeeba bil-weeba* a prolonged absence. **2** talking about people behind their backs, backbiting.

غايب *ɤaayib* /adj */ absent. ‖ *ʕal-ɤaayib* from memory, as in *ḥafaẓ ʕala l-ɤaayib* to learn by heart, *sammaʕt-i-lu ʕal-ɤaayib* I recited it to him from memory. - *ʔil-ɤaayib ma-luu-ʃ naayib [prov]* (he who is absent has no share) ≈ out of sight out of mind. - *ʔil-ɤaayib ḥiggit-u maʕaa [prov]* (he who absents himself has his excuse with him) ≈ don't blame someone for not showing up - he must have his reasons. - *ṣalaat il-ɤaayib [Isl]* prayer for the dead performed in the absence of the corpse.

الغيب *ʔil-ɤeeb* /n/ the unknown, the future.

الغيوب *ʔil-ɤiyuub: ʕallaam il-ɤiyuub* Knower of the unknown (epithet of God).

غيبوبة *ɤaybuuba* /n/ unconsciousness, coma.

غيّب *ɤayyib* /vt/ **1** to record as absent. *mumkin tiɤayyib-ni bukra* could you mark me down as absent tomorrow? **2** to detain, delay, keep waiting. *ʔeeh illi ɤayyib-ak* what kept you? ‖ *ʔil-ʕaada baqa-lha ʃahreen miɤayyibaa-ni* my period is two months late. — /vi/ **3a** to absent oneself for a long time, be late. *ɤayyibt*[a] *ʕanni* (or *ʕalayya*) (1) it's ages since you came to see me. (2) you are late. **3b** *[coarse]* to take a long time in reaching orgasm. - ava/pva *miɤayyib*.

مغيّبات *muɤayyibaat* /pl n/ ointments etc. that delay orgasm.

اتغيّب *ʔitɤayyib* /vi/ passive of *ɤayyib*. - iva *mitɤayyib*.

استغيب *ʔistaɤyib* /vt/ **1** to consider (too) long absent. *ʔistaɤyibt-ak geet ʔanadii-k* you were too long coming

so I came to call you. **2** to take advantage of the absence of. *ʕistaɣyibuu-k wi-kalu l-ʕakl* they took advantage of your absence and ate the food. - vn *ʕistiɣyaab*; ava *mistaɣyib*.

غ ي ب [2] see غ ا ب : *ɣaab*[1], *ɣaaba*

غ ي ب و ب see غ ي ب [1] : *ɣaybuuba*

غ ي ث see غ ي س

غ ي ر [1]

غير *ɣeer* **1** /n/ person(s) other than the one(s) in question, other(s). *ʕamlaak il-ɣeer* other people's property. *ħagaat ɣeer-i* things that belongs to those other than myself, other people's things. *ɣeer-ak xad-u* someone other than you took it. *fuuf ɣer-na* find someone other than us. *laazim nistaħmil xaṭaʕ il-ɣeer* we have to put up with others' mistakes. **2** /prep/ **2a** except, apart from. *da ɣeer il-marḍa wig-garħa* that's apart from the sick and wounded. *ma-fii-ʃ ɣeeru* that's all there is. *talatt uʃhur ma-fii-ʃ ɣerhum* three months and no more. *ma-yaxud-ʃ*[i] *ɣeer sawaani* it only takes a few seconds. **2b** different from. *ʕana ɣeer dool* I am different from them. *da ɣeer (da)* that is different (from that). **3** /neg particle/ not (also non-, un-etc.). *ɣeer.munaẓẓam* unorganized. *ɣeer iqtiṣaadi* uneconomic. *ʕil-kimya l-ɣeer ɛuḍwiyya* or *ʕil-kimya ɣeer il-ɛuḍwiyya* inorganic chemistry. *ḍarba ħurra ɣeer mubaʃra* an indirect free kick. *fi-ɣeer maṣlaħit il-balad* not in the country's interests. ¶ *min ɣeer* /prep/ without. *min ɣeer ʃuɣl* without work. *miʃ ɕaadir ʕaɛiif min ɣeerak* I can't live without you! *min ɣeer ma* /conj/ without. *min ɣeer ma niɛraf* without our knowing. - *ɣeer lamma* /conj/ except, unless. *ma-b-tuxrug-ʃ*[i] *ɣeer lamma taaxud ʕuxt-a-ha maɛaaha* she never goes out without taking her sister with her. - *ɣer-ʃ* /conj/ but after all, only. *ʕaɣ naɛam yistaahil id-dabaħ*[i] *ɣer-ʃ ʕabuu ṣaħib-na* it's true he deserves the worst, only his father is a friend of ours.

غيار *ɣiyaar* **1** /vn/ changing (e.g., clothes or dressings). *ʕooḍit ɣiyaar* changing room. ‖ *qiṭaɛ ɣiyaar* spare parts. **2** /n pl *-aat*/ **2a** replacement (for something worn out). *ʕil-ɕalam xiliṣ - ɛayiz-lu ɣyaar* the pen has run out - it needs a refill. **2b** change (e.g., of clothes, dressings). *bukra ħ-axsil ɣiyaraat il-ʕawlaad* I'll wash the children's dirty clothes tomorrow.

غيّر *ɣayyar* /vt/ to change, replace, alter. *ɣayyar is-siriir* change the bed-linen! *laazim nixayyar ʕumbuubit il-butagaaz* we have to get a new bottle of butane gas. *ɣayyart*[i] *raʕy-i* I changed my mind. ‖ *ɣayyar filuus* to convert money from one currency to another. - *ɣayyar ik-kalaam* (1) to change the subject. (2) to misinterpret what has been said. - *ɣayyar ir-riiɕ* to have the first meal of the day. - *ɣayyar id-damm* to make furious. - vn *taɣyiir*; ava/pva *mixayyar*.

تغيير *taɣyiir* /n pl *-aat*/ change, alteration. *ɛamalu taɣyiraat fil-maħall* they made changes in the shop.

تغييرة *taɣyiira* /n pl *-aat*/ **1** = *ɣiyaar* 2. **2** /inst n/ a changing. *ʕil-mumarriḍa ma-ɛamalit-lii-ʃ ɣeer taɣyiira waħda fil-ʕusbuuɛ* the nurse only gave me one change (of dressing) in a week.

مغيّر *muɣayyir, miɣayyar* /n/ Changer (epithet of God). *subħaan miɣayyar il-ʕaħwaal* ≈ what a change!

اتغيّر *ʕitɣayyar* /vi/ **1** to be changed, be replaced, be altered. *ʕil-maɛaad itɣayyar* the appointment was changed. *ʕil-ɛarabiyya mitʃaħħama w-mitɣayyar laha z-zeet* the car has been greased and had its oil changed. **2** to change, become different. *ʕil-balaħ loon-u tɣayyar* the colour of the dates has changed. *ʕid-dinya tɣayyarit* times have changed. *ʕana m-atɣayyar-ʃ*[i] *ʕabadan* ≈ I am always dependable. *ʕinta tɣayyart*[i] *min gihat-i* you don't treat me (well) the way you used to. ‖ *loon-u* (or *damm-u*) *tɣayyar* he got upset. - vn *taɣayyur*; ava/iva *mitɣayyar*.

تغيّر *taɣayyur* /n pl *-aat*/ change, alteration. *ħaṣalit taɣayyuraat kitiir fil-balad* many changes have taken place in the country.

متغيّر *mutaɣayyir* /n pl *-aat*/ *[math]* variable.

غ ي ر [2]

غير *ɣaar*[5] *(i)* /vi/ to be jealous. *bi-yɣiir min ʕaṣħaab-u* he gets jealous of his friends. *bi-yɣiir ɛala mraat-u* he gets jealous about his wife. - vn *ɣiira, ɣayaraan*; ava *ɣaayir, ɣayraan*.

غيرة *ɣiira* /n/ jealousy. *ʕil-ɣiira murra [prov]* jealousy is bitter.

غيّار *ɣayyaar*[1] /adj */ jealous by nature, given to jealousy.

غيّور *ɣayyuur* = *ɣayyaar*.

اتغار *ʕitɣaar*[2] /vi/ (impersonal) passive of *ɣaar*[5]. *da yitɣaar minnu* he is likely to incur jealousy. - iva *mitɣaar*.

غ ي ر [3]

غار *ɣaar (i)* /vi/ to be ticklish. *b-aɣiir min riglay-ya* I'm ticklish in my feet. - vn *ɣiira, ɣayaraan*; ava *ɣaayir, ɣayraan*.

غيّار *ɣayyaar*[2] /adj */ ticklish.

⁴ غ ى ر see غ ا ر : *ʁaar*[1]

⁵ غ ى ر see غ و ر : *ʁaar*[2], *ʁaar*[3], *ʁaar*[4], *ʁaara, maʁaara, ʃaʁaar*

غ ى س

غاث، غات *ʁaas, ʁaat*↓ *(i)* /vt/ to come to the help of. *ʁiriqt*[i] *w-ma-ħadd*[i] *-ʃ ʁas-ni* I was drowning and no one came to my aid. - vn *ʁoos, ʁayasaan*; ava *ʁaayis*.

الغوث *ʃil-ʁoos* /n/ the one who saves (title given in popular Sufism to certain saints).

أغاث *ʃaʁaas*↑ = *ʁaas*. - vn *ʃiʁaasa*; ava *muʁiis*.

مغيث *muʁiis, muʁiit*↓ /n/ Helper (epithet of God).

استغاث *ʃistaʁaas*↑ /vi/ to call for help. *ʃistaʁaasit bil-buliiṣ* she sought help from the police. - vn *ʃistiʁaasa*; ava *mistaʁiis, mustaʁiis*.

استغاثة *ʃistiʁaasa* /n pl *-aat*/ call for help.

غ ى ط

غيط *ʁeeṭ* /n pl *ʁeṭaan*/ field. ‖*ṣurṣaar il-ʁeeṭ [zool]* cricket. - *ʃabu l-ʁeeṭ* /prop n/ village near the Barrages north of Cairo, home of a group of musicians and dancers who perform at *zaar* ceremonies.

غيطانى *ʁeṭaani* **1** /adj pl *-yya*/ **1a** pertaining to the village of *ʃabu l-ʁeeṭ*. **1b** pertaining to the *ʃabu l-ʁeeṭ* troupe. **2** /adj invar/ farm-fresh (of vegetables).

غ ى ظ

غاظ *ʁaaẓ (i)* /vt/ **1** to hurt, cause irritation to. *marawħ-i bi-tʁiẓ-ni* my lungs cause me irritation. **2** to make irritable, annoy, frustrate, infuriate. *ʃilli bi-yʁiẓ-ni ʃinn in-naas bi-yiftikru ʃinn ig-gawaaz feeʃ sahl* what annoys me is that people think marriage is an easy business. **3** to tease. - vn *ʁeeẓ, ʁayaẓaan*; ava *ʁaayiẓ*.

غيظ *ʁeeẓ* /n/ irritation, annoyance, frustration. *ħa-tṭaqq*[i] *mil-ʁeeẓ* she's about to explode with frustration. *muutu b-ʁeẓ-kum* (or *bi-ʁayẓ-i-kum*) ≈ may your vexation kill you!

اتغاظ *ʃitʁaaẓ* /vi/ to be or become irritated, annoyed, frustrated or infuriated. - ava/iva *mitʁaaẓ*.

استغاظ *ʃistaʁaaẓ*↓ = *ʃitʁaaẓ*. - ava *mistaʁaaẓ*.

غ ى م

غيم *ʁeem* /coll n/ cloud(s).

غيمة *ʁeema* /n/ **1** /unit n/ a cloud. ‖*ʁeema w-ʛaddit* it was bad but it passed, they were bad times but they're over now. **2** cloudiness, murkiness, gloom.

غيام *ʁayaam* (also *ʁayaan*) = *ʁeem*.

غيامة *ʁayaama* (also *ʁayaana*) /unit n, pl *-aat*/ a cloud.

غيّم *ʁayyim* (also *ʁayyin*) /vi/ to cloud over, become cloudy. *ʃig-gaww*[i] *ʁayyim* the weather turned cloudy. - vn *taʁyiim*; ava *miʁayyim*.

[1] غ ى ن

غين *ʁeen* /fem n, pl *-aat*/ nineteenth letter of the Arabic alphabet.

[2] غ ى ن see غ ى م : *ʁayaan, ʁayaana, ʁayyin*

غ ى ى see غ و ى : *ʁiyya*

ف

ف

ف *fa-* /conj/ **1** (and) so, therefore. *ma-kan-ʃ*[i] *maʕaaya fluus fa-ruħt il-bank* I didn't have any money on me so I went to the bank. *bi-titħidif ħadfa muʕayyana fa-bi-tliff* it is thrown in a certain way and so it spins. **2** and there, and then. *kunt*[i] *daaxil in-naadi fa-lamma geet ʕand il-baab ʠabilt*[a] *ħasan* I was coming into the club and then, when I got to the door, I met Hasan. *kunt*[i] *b-asammaʕ fa-qaṭiʕ-ni ʕand*[i] *kilmit malʕuun* I was reciting, and at the word 'accursed' he interrupted me.

ف ا

فا *faa* /fem n/ twentieth letter of the Arabic alphabet. - also *faaʕ, fih, feeh*.

ف ا ء

فاء *faaʕ* /fem n, pl *-aat*/ twentieth letter of the Arabic alphabet. - also *faa, fih, feeh*.

(ف ا ر)

فار *faar*[1] /n pl *firaan*/ mouse, rat. ‖ *ʕil-faar liʕib fi-ʕibb-i* I began to have suspicions, I smelled a rat. - *faar is-sabtiyya* see *ʕis-sabtiyya*.

فارة *faara* /n pl *-aat*/ *[carp]* plane. *faarit tafriib* smoothing plane. *faarit kaff* jack plane.

(ف ا ز)

فاز *faaz* <Fr> /n/ *[elec]* phase.

فازة *vaaza* or *vaaza, faaza*[↓] or *faaza* <It *vaso*> /n pl *-aat, -aat*/ vase.

ف ا س

فاس *faas* /n, usu fem, pl *fuus*/ type of heavy hoe or mattock (see Pl.D, 6). ‖ *wiqiʕ il-faas fir-raas [prov]* (the *faas* has fallen on the head) things have gone past the point of no return.

ف ا ش

فاش *faaf* /coll n/ bird mite(s).

فاشة *faafa* /unit n, pl *-aat*/ a bird mite.

ف ا ل see ف ء ل: *faal*

ف ا و ل see ف و ل[3]: *faawil*

ف ا ى

فاية *faaya* /n/ *[naut]* halyard.

ف ء see also ف ى ى

فئة *fiʕa* /n pl *-aat*/ **1** civil service employment category covering certain salary grades. **2** *fiʕaat* /pl n/ *[pol]* category in the Egyptian electoral system comprising people other than labourers and peasants.

ف ء ف ء

فأفأ *faʕfaʕ* /vi/ to stammer. - vn *faʕfaʕa*; ava *mifaʕfaʕ*.

ف ء ل

فأل *faal, faʕl* /n/ omen. ‖ *faal allaah wala faal-ak* ≈ God forbid! - *xudu fal-kum min ʕiyal-kum [prov]* ≈ out of the mouths of babes.

اتفائل *ʕitfaaʕil* /vi/ to become optimistic. *ʕitfaʕilt*[i] *lamma smiʕt il-xabar* I started to feel optimistic when I heard the news. - ava *mitfaaʕil*.

تفاؤل *tafaaʕul*[↑] /n/ optimism. see further under ف و ل[1]

ف ب ر

فبر *fibr* <Fr *fibre*> /n/ compressed cardboard.

ف ب ر ا -

فبراير *fabraayir* /n/ February.

ف ب ر ك [1]
فابريكة *fabriika* <It *fabbrica*> /n pl *-aat*/ factory.

ف ب ر ك [2]
فبرك *fabrik* <perh It *fabbricare*> /vt/ to fabricate (a story etc.). - vn *fabraka*; ava/pva *mifabrik*.
اتفبرك *ʔitfabrik* /vi/ to be fabricated (of news, a story etc.). - vn *tifabriik*; iva *mitfabrik*.

ف ت see ف ت و [1]: *fata*

ف ت ت
فتّ *fatt (i)* **1** /vt/ to make into *fatta*. **2** /vi/ to prepare *fatta*. - vn *fatt, fatataan*; ava *faatit*; pva *maftuut*.
فتّة *fatta* /n/ a dish consisting of hot broth, or the like (e.g., milk), poured over crumbled bread. *fattit ʕads* bread in lentil soup. *fattit laban* bread and milk with sugar.
فتّات *fattaat* /adj * and pl *fattaata*/ forever ready to sponge a meal.
فتّت *fattit* /vt/ to crumble, break into small pieces. - vn *taftiit*; ava/pva *mifattit*.
اتفتّت *ʔitfattit* /vi/ to be crumbled or crumble, be broken into small pieces or break into small pieces. - ava/iva *mitfattit*.

ف ت ح
فتح *fataḥ (a)* /vt/ **1a** to open. *ʔiftaḥ il-baab* open the door! *ʔawwil ḥaaga fataḥt[a] ʕenay-ya ʕaleeha ṣ-ṣubḥ* the first thing my eyes lighted on in the morning. *ʕumr-a-ha ma-fataḥit buqq-a-ha ʕala ḥadd* she's never said a bad word to anyone! ‖ *fataḥ ik-kutfiina* (or *ik-kitaab*) to tell fortunes by cards (or by the stars). **1b** to open up, make accessible. *fataḥ-li beet-u* he opened his house to me. *ʔis-sikka maftuḥaa-lak* the way is open to you. ‖ *wilaada b-fatḥ[i] baṭn* Caesarean delivery. - *ʔiftaḥ-li s-sikka* clear the (telephone) line for me! - *yiftaḥ alla* (may God open a way!) ≈ certainly not! no go! no way! (in emphatic refusal of an offer). - *been il-baayiʕ wiʃ-ʃaari yiftaḥ alla* (between the vendor and the buyer: may God open a way!) ≈ if you don't like my price, you don't have to buy (or sell)! (said in bargaining). - *rabb-i-na yiftaḥ-ha ʕala* ... may Our Lord provide help or profit for ..., as in *rabb-i-na yiftaḥ-ha ʕalayya b-ʃirfeen* may Our Lord help me with some money. - *ʔiid-u* (or *beet-u*) *maftuuḥa* he's generous and openhanded. **2** to turn on, set going. *ʔiftaḥ in-nuur* switch on the light! ‖ *fataḥ ṣoot-u* he let out a shout. - *fataḥ in-nifs* to stimulate the appetite, set one's mouth watering. **3** to set up, establish. *fataḥt[i] dukkaan* I opened a shop. *ʔaḥibb aftaḥ ḥisaab ʕandukum* I'd like to open an account with you. ‖ *fataḥ beet* to set up (one's own) house. - *huwwa faatiḥ il-beet* he is the breadwinner. **4** to start, begin. *fataḥt[i] maḥḍar* I instituted legal proceedings. **5** to conquer. ‖ *zayy[i] ma ykuun fataḥ ʕakka* (as if he had conquered Acre) ≈ as if he had accomplished the impossible. - /vi/ **6** to open, open up. *ʔil-baab fataḥ* the door opened. *ʔil-maḥallaat fatḥa* the shops are open. ‖ *ʔil-ḥuṣaan haayig - ma-tiftaḥ-luu-ʃ* the horse is excited - don't give him his head! **7** to be set up, be established. *maṭʕam gidiid fataḥ fik-kurniif* a new restaurant opened on the Corniche. **8** to become lighter (of colours). *ʔil-loon il-ʔaḥmar bi-yiftaḥ fiʃ-ʃams* red colours get lighter in the sun. - vn *fatḥ, fataḥaan, futuuḥ*; ava *faatiḥ*; pva *maftuuḥ*.
فتحة *fatḥa* /n pl *-aat*/ **1** instance noun of *fatḥ*. **2** *[gram]* vowel sign for short *a* (in Arabic writing). — /also pl *futaḥ*/ **3** aperture. *fatḥaat iʃ-ʃababiik* the openings for the windows. ‖ *fatḥit ʕadasa* diaphragm of a (camera) lens. - *fatḥit ʃarag* anus.
فتوح *futuuḥ* /vn/ ‖ *futuuḥ rabbaani* divine grace bestowed on someone (as manifested, especially, in wealth).
فاتح *faatiḥ[i]* **1** /adj/ pale, light (of colour). *ʔazraq faatiḥ* light blue. - *fawaatiḥ* /pl n/ **2** light-coloured items. *ma-tixsilii-ʃ il-fawaatiḥ maʕa l-ɣawaamiq* don't wash the light- and dark-coloured things together!

الفاتحة *ʔil-fatḥa* /n/ *[Isl]* **1** the opening chapter of the Koran (often read by parties to a preliminary contract or agreement as an earnest of good faith). *ʕaru fatḥit-ha* they (i.e. the future bride's and groom's parents) confirmed their intentions by reading the opening chapter of the Koran. *ʕareena l-fatḥa ʕala l-ʔamwaat* we read the Fatiha for the dead, we prayed for the dead. ‖ *ʔiʕra l-fatḥa ʕala rooḥ-ak* say your prayers, (because I'm going to kill you)! **2** *fawaatiḥ* /pl n/ prayers for the dead.
مفتوح *maftuuḥ* /pva/ ‖ *bil-maftuuḥ* openly, frankly, candidly.
أفتح *ʔaftaḥ* /el/ lighter/lightest (of colour).
فتّاح *fattaaḥ* /n/ Opener (of the way), Facilitator (epithet of God). ‖ *ya fattaaḥ ya ʕaliim ya razzaaq ya kariim* ≈ (1) may this day be profitable (said at the start of a day). (2) the day is ruined for me (said in exasperation when things go wrong in the morning).
فتّاحة *fattaaḥa* /n pl *-aat*/ opener (e.g., for bottles, tins).
مفتاح *muftaaḥ* /n pl *mafatiiḥ*/ **1** key. *ʕafal iʃ-faʕʕa bil-muftaaḥ* he locked the apartment. **2** spanner, wrench. *muftaaḥ ʔingiliizi* monkey wrench. **3** switch, lever, (gas) tap. *muftaaḥ nuur* light-switch. *muftaaḥ ḥawa* gas control (of a welder's torch). *muftaaḥ (saaʕa)* crown (of

a watch). **4** *[mus]* peg (of a stringed instrument).

اتفتح ʔitfataḥ /vi/ **1a** to open, be opened. *ʔil-ʔabwaab itfataḥit l-istiqbaal il-ɛariis* the doors were opened to receive the bridegroom. **1b** to be made accessible. *ʔis-sikka tfataḥit-li* the way was opened to me. **2a** to be turned on, be switched on, be set going. *ʔir-radyu tfataḥ ʔizzaay* how did the radio come to be turned on? ‖ *ʔitfataḥit fi-goz-ha* she lashed out at her husband, she snarled at her husband. **2b** to embark, get going. *ʔitfataḥit fiʔ-ʔakwa* she launched into a long complaint. *ʔitfataḥu fig-giwaan* they've hit a scoring streak. *ḥaẓẓ-u tfataḥ* he's having a run of good luck. **3** to be set up, be established. **4** to be started, be begun. - ava/iva *mitfitiḥ*.

انفتح *ʔinfataḥ* = *ʔitfataḥ*. - vn *ʔinfitaaḥ*; ava/iva *minfitiḥ*.

الانفتاح *ʔil-ʔinfitaaḥ* (also *ʔil-ʔinfitaaḥ il-ʔiqtiṣaadi*) /n/ *[pol]* the 'open-door' policy, liberalization of the Egyptian economy instituted by President Sadat in 1974.

فتّح *fattaḥ* /vt/ **1** to open wide, or repeatedly, or several things. *fattaḥ iʔ-ʔiiʔ* open (all) the shutters! ‖ *fattaḥ fi-ɛeen-(u)* to look (s.o.) in the eye. - *fattaḥ ɛeen-(u)* to be alert, keep (one's) wits about (one). - *fattaḥ-lu muxx-u* give him a bribe! - *fattaḥ fi-(i)* to answer (s.o.) back rudely. **2** *[print]* to develop (a plate). — /vi/ **3** to open one by one. *ʔil-ʔazhaar tifattaḥ fir-rabiiɛ* flowers bloom in spring. - vn *taftiiḥ*; ava/pva *mifattaḥ*.

مفتّح *mifattaḥ* /adj */ **1** seeing, not blind. **2** alert, cunning. *laazim iz-zibuun yibqa mfattaḥ* the customer should keep his wits about him. ‖ *bint[1] mfattaḥa* (over-) precocious (young) girl.

اتفتّح *ʔitfattaḥ* /vi/ passive of *fattaḥ*. - vn *tafattuḥ*↑; iva *mitfattaḥ*.

فاتح *faatiḥ*[2] /vt/ to address oneself to, approach. *ḥ-afatḥ-u fil-mawduuɛ* I'll raise the subject with him. *fatiḥ-ha fig-gawaaz* he proposed marriage to her. - vn *mufatḥa, mifatḥa*; ava *mifaatiḥ*.

اتفاتح *ʔitfaatiḥ* /vi/ to be addressed, be approached. - iva *mitfaatiḥ*.

افتتح *ʔiftataḥ*↑ /vt/ to inaugurate. *ʔiftitaaḥ qanaat is-siwees* the inauguration of the Suez Canal. - vn *ʔiftitaaḥ*; ava *miftitiḥ*.

افتتاحي *ʔiftitaaḥi*↑ /adj/ opening. *maqaala ʔiftitaḥiyya* leading article, editorial.

افتتاحيّة *ʔiftitaḥiyya*↑ /n pl *-aat/ *[mus]* overture.

استفتح *ʔistaftaḥ* **1** /vt/ to approach initially. *ʔistaftaḥ-ni biʔ-ʔitiima* he met me with insults. **2** /vi/ to open one's day's or life's work. *sawwaaq it-taks istaftaḥ biyya* I was the taxi-driver's first customer. *ʔistaftaḥ il-muḥaami fi-ʔawwil ma ftaxal bi-ṭalaaq sitt* the lawyer began his career with a woman's divorce (case). *ḥallaaq bi-ʔaqraɛ istaftaḥ [prov]* ≈ (as unlucky as) a barber whose first customer is bald (from ringworm). *ʔistiftaaḥ-ak laban* you've set my day off to a good start! (from, e.g., a trader to his first customer of the day). - vn *ʔistiftaaḥ*; ava *mistaftaḥ*.

ف ت ر[1]

فترة *fatra* /n pl *-aat, fataraat*/ period of time. *fatrit il-xuṭuuba* the engagement period. *bi-yiftaxal fil-fatra l-masaʔiyya* he works the evening shift.

فتر *fitr* /n/ span, or measurement equivalent to the span, between the extended thumb and index finger.

ف ت ر[2]

فتر *fitir (u)* /vi/ to become tepid. *ʔil-ɛilaqaat illi benna fitrit* relations between us have cooled. *mayya fatra* lukewarm water. - vn *futuur*; ava *faatir*.

ف ت ر[3] see ف ت و ر: *fatuura*

ف ت ر ي ن

فترينة *vatriina* <It *vetrina*> /n pl *-aat, vatariin*/ display case, display window, shop window. - also *batriina*.

ف ت س see ف ت ي س: *fitees, fitiis*

ف ت ش

فتش *fataʃ (i)* **1** /vt/ to disclose, reveal, divulge. *miin fataʃ is-sirr* who let the cat out of the bag? ‖ *sirr-u maftuuʃ* he can't keep a secret. **2** /vi/ to act as informer. *ḥ-aftiʃ ɛaleek* I'll tell on you. - vn *fatʃ, fataʃaan*; ava *faatiʃ*; pva *maftuuʃ*.

اتفتش *ʔitfataʃ* /vi/ to be disclosed, be revealed, be divulged. - iva *mitfitiʃ*.

انفتش *ʔinfataʃ* = *ʔitfataʃ*. - iva *minfitiʃ*.

فتش *fattiʃ* **1** /vt/ to make an inspection or search of. *taftiiʃ ɛaff* luggage inspection. *fattiʃu l-beet wi-laqu muxaddaraat* they searched the house and found drugs. **2** /vi/ to make an inspection or search. *qaɛadt[1] saaɛa ʔafattiʃ ɛala ḥittit il-waraqa di* I spent an hour hunting for this bit of paper. *ʔin-naʃʃaal bi-yirkab il-ʔutubiis ɛaʃaan yifattiʃ-lu ɛala ṣeeda* the pickpocket rides the buses in order to search out his prey. - vn *taftiiʃ*; ava *mifattiʃ*.

تفتيش *taftiiʃ* /n pl *tafatiiʃ*/ district, inspectorate. *taftiiʃ rayy* irrigation circle, irrigation district.

مفتّش *mufattiʃ* /n */ inspector.

اتفتّش *ʔitfattiʃ* /vi/ **1** to be inspected, be searched. **2** (impersonal) passive of *fattiʃ* 2. *ʔil-muxaddaraat*

itfattiʃ ɛaleeha f-kull[i] ħitta the drugs have been hunted for everywhere. - iva *mitfattiʃ*.

ف ت غ ر –
فوتوغرافية *futuɤrafya* <It *fotografia*> /n pl *-aat/ [obsol]* camera.
فوتوغرافي *futuɤraafi* /adj/ photographic. *ṣuura futuɤrafiyya* photograph.

ف ت ف ت
فتفت *fatfit* /vt/ to crumble, break into tiny pieces. *fatfitna l-ɛeef* we crumbled the bread. - also *farfit*. - vn *fatfata*; ava/pva *mifatfit*.
فتفوتة *fatfuuta* /n pl *fatafiit*/ tiny piece, crumb. *fatafiit xaʃab* slivers of wood. *fatfuutit ɛeef* a crumb of bread. - also *farfuuta*.
اتفتفت *ʔitfatfit* /vi/ to be crumbled, be broken into tiny pieces. - also *ʔitfarfit*. - iva *mitfatfit*.

ف ت ق
فتق *fataq (a)* /vt/ **1** to rip open (a garment) at the seams. **2** to deflower (a virgin). - vn *fatq, fataqaan*; ava *faatiq*; pva *maftuuq*. see further under ف ى ت ق
فتق *fatq* /n pl *futuuq*/ **1** rent, tear. **2** *[path]* hernia.
فتقة *fatqa* /pl *-aat/* instance noun of *fatq*.
فتاق *fitaaq* /n pl *-aat/ [path]* hernia, rupture.
اتفتق *ʔitfataq* /vi/ **1** passive of *fataq*. **2** to come open at the seams. - ava/iva *mitfitiq*.
انفتق *ʔinfataq* = *ʔitfataq*. - ava/iva *minfitiq*.
فتّق *fattaq* **1** /vt/ to cause to tear or rip. *kutr if-fadd[i] bi-yfattaq il-ɢumaaʃ* too much stress will tear the material. ‖*ħ-afattaq-lu* I'll split his seams (so all his dirty secrets will come out), I'll expose him to the world. **2** /vi/ to rip open, split (at the seams, of a garment). - ava *mifattaq*.
مفتّقة *mifattaqa* /n/ jam-like mixture of spices, herbs, nuts and molasses (eaten by women as a fattener).
اتفتّق *ʔitfattaq* /vi/ to rip open at the seams (of a garment). *ʔil-banṭaloon itfattaq* the trousers burst at the seams. - ava *mitfattaq*.

ف ت ك
فتك *fatak† (a)* /vi/ to wreak destruction. *fataku b-ʃaɛdaʔ-hum* they annihilated their enemies. ‖*fatak bil-ʃakl* he wolfed down every last morsel of the food. - vn *fatakaan, fatk*; ava *faatik*.
فتك *fitik* /adj */ **1** clever and capable. **2** successful with women (of a man).
فتاكة *fataaka* /n/ cleverness and capability.
اتفتك *ʔitfatak* /vi/ (impersonal) passive of *fatak*. *ʔitfatak biihum waaħid waaħid* they were wiped out one after the other. - iva *mitfitik*.
انفتك *ʔinfatak* = *ʔitfatak*. - iva *minfitik*.

ف ت ل [1]
فتل *fatal (i)* /vt/ **1** to spin, twist together into strands. *fatl il-ħibaal* rope-making. ‖*min daqn-u wi-ftil-lu [prov]* (if he wants a rope, take hairs from his beard and make it for him) ≈ make him pay for all he gets. **2** to roll (dough) into strands. - vn *fatalaan, fatl*; ava *faatil*; pva *maftuul*.
فتلة *fatla* /n/ **1** /pl *-aat/* instance noun of *fatl*. **2** /pl *-aat, fital/* thread, piece of thread. *fatlit xeeṭ* a length of thread. *fatlit dubaara* a piece of string. *naḍḍaf bil-fatla* to pluck out facial hair with a twisted double thread (the hair is caught between the two strands and pulled out as the thread is passed over the face). ‖*ɛala l-fatla* exact, precise (i.e. to the last thread). - *ʔibn[i] fatla* a crafty fellow. *-fammaɛ il-fatla* he ran off, he beat it. **3** /pl *fital/* strand (e.g., of hair, dough).
فتول *fatuul* /n pl *fataayil/* tampon.
فتيل *fitiil* /n pl *fataayil/* **1a** lamp wick. **1b** pilot-light. **2** fuse (for setting off an explosive charge). **3** tampon. **4** square-headed screw. **5** /coll n/ seed onion(s).
فتيلة *fitiila* /n pl *fataayil/* **1** = *fitiil* 1 and 2. ‖*ħaṭṭ[i] fii fitiila* he added fuel to the fire, he exacerbated the situation. **2** strand (of dough). **3** *[med]* sponge. – /unit n, pl *-aat, fataayil/* **4** a seed onion.
اتفتل *ʔitfatal* /vi/ **1** to be spun, be twisted together (into strands). **2** to be rolled into strands (of dough). ‖*baɛd il-ɛiid ma-yitfatil-f[i] kaħk [prov]* (after the festival *kaħk* is not made) ≈ one doesn't hang streamers after Christmas. - iva *mitfitil*.
انفتل *ʔinfatal* = *ʔitfatal*. - iva *minfitil*.
فتّل *fattil* /vt/ to twist, roll (into strands) repeatedly. *qaɛad yifattil ʃawarb-u* he sat twirling his moustache. *bi-nfattil il-ɛagiina* we make the dough into (lots of) strands. - vn *taftiil*; ava/pva *mifattil*.
اتفتّل *ʔitfattil* /vi/ to be twisted or rolled (into strands) repeatedly. - iva *mitfattil*.

ف ت ل [2] see ف ت ى ه : *futeel*

ف ت م ى ن
فيتامين *fitamiin, vitamiin* <Fr> /n pl *-aat/* vitamin.

ف ت ن [1]
فتن *fatan (i)* **1** /vt/ to charm, enchant. *gamal-ha yiftin il-ɛaql* her beauty would turn your head. **2** /vi/ to tell tales, tattle. *ʔidda-lna gneeh ɛaʃaan ma-niftin-f[i] ɛalee*

he gave us a pound so that we wouldn't squeal on him. - vn *fitna, fatn*; ava *faatin*; pva *maftuun*.
فتنة *fitna* /n/ **1** /vn/ telling tales, tattling, squealing. – /pl *-aat, fitan*/ **2** conflict, discord, dissension. **3** sedition.
فتّان *fattaan* **1** /adj/ alluring, enchanting. **2** /n * and pl *fattaana*/ blabbermouth, tattler, squealer.
أفتن *ʕaftan* /el/ **1** more/most charming. **2** more/most tattling.
فتّن *fattin* /vt/ to make (s.o.) blab. *ḫawilt afattin-u ɛaleek ma-ɣdirt*^{i}*-ʃ* I tried to make him squeal on you, but without success. - vn *taftiin*; ava/pva *mifattin*.
اتفتّن *ʕitfattin* /vi/ passive of *fattin*. - iva *mitfattin*.

ف ت ن [2]
فتنة *futna* /n/ *[bot]* cassie, popinac (Acacia farnesiana).

ف ت ه see ف ت ى ه : *futeeh*

ف ت و [1] see also ف ت و ن
فتى *fata*[1] /n pl *fityaan*/ youth, young man.
فتاة *fataah* /n pl *fatayaat*/ young woman.
فتوّة *futuwwa*↑ /n/ *[obsol]* military training (in schools).
فتوّة *fitiwwa* /n pl *-aat*/ **1** *[obsol]* neighbourhood strong-man and protector of local interests. **2** bully, tough guy, hood. – /adj invar/ **3** tough. *waad fitiwwa* a tough kid. *bint*^{i} *ftiwwa* a tough no-nonsense girl.
فتوّاية *fitiwwaaya* /n pl *-aat*/ *[obsol]* neighbourhood virago acting as protector of local interests. ‖ *bint*^{i} *ftiwwaaya* a tough girl, hoyden.

ف ت و [2] see ف ت ى [1] : *fatwa*

ف ت و ر
فاتورة *fatuura* <It *fattura*> /n pl *fawatiir*/ **1** invoice, bill. **2** *[text]* sample.

ف ت و ن
فتونة *fatwana* /n/ **1** verbal noun of *ʕitfatwin*. **2** *[obsol]* sum of qualities (strength, courage, generosity etc.) expected of a *fitiwwa*.
اتفتون *ʕitfatwin* /vi/ to act the tough, behave in a bullying fashion. - vn *fatwana*; ava *mitfatwin*. see further under ف ت و [1]

ف ت ى [1]
فتى *fata*[2] *(i)* /vi/ **1** to issue a legal opinion. **2** to make pompous pronouncements, lay down the law. - vn *fatwa*; ava *faati*.

فتوى *fatwa* /n pl *-aat, fataawi*/ legal opinion, ruling.
أفتى *ʕafta* /vi/ = *fata*[2]. *daar il-ʕiftaaʕ*↑ or *daar il-ʕifta* central office of the Mufti of Egypt. - vn *ʕiftaaʕ, ʕifta*; ava *mufti*.
مفتى *mufti* /n */ *[Isl]* mufti.
استفتى *ʕistafta* /vt/ to ask for a legal opinion. - vn *ʕistiftaaʕ*; ava *mistafti*.
استفتاء *ʕistiftaaʕ* /n pl *-aat*/ referendum.

ف ت ى [2] see ف ت و [1] : *fata*[1], *fityaan, fataah, fatayaat*

ف ت ى س
فتيس *fitees, fitiis* <Fr *vitesse*> /n/ *[auto]* gear-shift lever.

ف ت ى ل see ف ت ى ه : *futeel*

ف ت ى ه
فوتيه *futeeh* (also *futeel*) <Fr *fauteuil*> /n pl *-aat*/ armchair.

ف ج ء
فجأة *fagʕa* /adv/ suddenly. *maat fagʕa* he died suddenly.
¶ *fagʕatan*↑ = *fagʕa*.
فجائى *fugaaʕi* /adj/ surprise, surprising. *taftiiʃ fugaaʕi* surprise inspection. *ʕil-xabar gaa-li b-ṭariiɣa fugaʕiyya* the news reached me in an unexpected way.
فاجئ *faagiʕ* /vt/ to surprise, catch by surprise. *fagiʕ-ni l-ɛaya w-ʕana f-maktab-i b-aʃtaɣal* the illness hit me suddenly while I was working at the office. - /the literary passive occurs/ *fugiʕt*^{i} *lamma ʃuft-u* I was taken by surprise when I saw him. - vn *mifagʕa*; ava *mifaagiʕ, mufaagiʕ*↑; pva *mufaagaʕ*↑.
مفاجأة *mufagʕa* /n pl *-aat*/ surprise. *kaanit mufagʕa saɛiida liyya* it was a happy surprise to me.
اتفاجئ *ʕitfaagiʕ* /vi/ to be caught by surprise or unprepared. - iva *mitfaagiʕ*.

ف ج ج
فجّ *fagg (i)* /vi/ to burst forth, pour forth (of odour, light etc.). - vn *fagg, fagagaan*; ava *faagig*.

ف ج ر [1]
فجر *fagar (u)* **1** /vt/ to burst open. *ʕil-ɛarabiyya daasit ik-koora fagarit-ha* the car ran over the ball and burst it. ‖ *raaḫit mafguura fil-ɛiyaaṭ* she burst into tears. **2** /vi/ to overstep the bounds of decency. *kull*^{i} *maada wi-b-tufgur illi ḫawaleek* the more time passes the more

outrageous your behaviour becomes and the more you harm those around you. *ɛamil-ni b-fugr* he treated me outrageously. - vn *fugr, fagr, fuguriyya, fuguurˀ*; ava *faagir*; pva *mafguur, mafguur*.

فجر *fugr* /n/ immorality.

فجريّة *fuguriyya* = *fugr*.

فجرة *fagra* /pl *-aat*/ instance noun of *fagr*. ‖*ya fagrit-i minkum* I've had all I can stand from you!

فاجر *faagir* /n * and pl *fagara, fuggar*/ libertine, rake.

فاجرة *fagra* /n pl *-aat*/ loose woman.

فجر *fagr* /n/ **1** dawn. *maɛa ʔawwil xiyuuṭ il-fagr* at the crack of dawn. **2** morning prayer, the first of the five obligatory daily prayers of Islam.

فجريّة *fagriyya* /n/ (time of) dawn.

أفجر *ʔafgar* /el/ more/most immoral.

انفجر *ʔinfagar* /vi/ **1** to burst, be burst. **2** to explode, be exploded. *ʔil-qunbila nfagarit ɛaleehum* the bomb exploded on them. - vn *ʔinfigaar*; ava/iva *minfigir*.

انفجار *ʔinfigaar* /n pl *-aat*/ explosion. *simiɛna ṣoot infigaar* we heard (the sound of) an explosion. *ʔil-infigaar is-sukkaani* the population explosion.

اتفجر *ʔitfagar* = *ʔinfagar*. - ava/iva *mitfigir*.

فجّر *faggar* /vt/ to blow up, cause to explode. *faggaru g-gabal bid-dinamiit* they blasted through the hill with dynamite. - vn *tafgiir*; ava/pva *mifaggar*.

اتفجّر *ʔitfaggar* /vi/ to be blown up, be exploded. - iva *mitfaggar*.

متفجّرات *mutafaggiraatˀ* /pl n/ explosives.

ف ج ر ² see ف ج و ر: *faguura*

ف ج ع ¹

فجع *fagaɛ¹* *(a)* /vt/ to afflict, cause anguish to. *rabb-i-na fagaɛ-na biik* the good Lord has punished us with your presence! -/the literary passive occurs/ *fugiɛna lamma ʃufna g-garḥa* we were deeply distressed when we saw the wounded. - vn *fagaɛaan*; ava *faagiɛ*; pva *mafguuɛ*.

فاجعة *faagiɛa, fagɛa¹* /n pl *fawaagiɛ*/ calamity, disaster.

فجيعة *fagiiɛa* /n pl *fagaayiɛ*/ calamity, misfortune, disaster.

اتفجع *ʔitfagaɛ¹* /vi/ to be or become deeply distressed, suffer great anguish. *ʔitfagaɛit lamma diryit bi-moot ibn-a-ha* she was grief-stricken when she heard the news of her son's death. - ava/iva *mitfigiɛ*.

انفجع *ʔinfagaɛ¹* = *ʔitfagaɛ¹*. - ava/iva *minfigiɛ*.

ف ج ع ²

فجع *fagaɛ²* *(a)* /vt/ to arouse greed in, make gluttonous. - vn *fagaɛaan*; ava *faagiɛ*; pva *mafguuɛ*.

مفجوع *mafguuɛ* /adj */ gluttonous.

فجعة *fagɛa²* /n/ gluttony.

فجعان *fagɛaan* /adj */ gluttonous. see further under ف ج ع ن

فجاعة *fagaaɛa* = *fagɛa²*.

اتفجع *ʔitfagaɛ²* /vi/ **1** to become maddened with desire, have one's appetite strongly aroused. *ʔitfagaɛt¹ lamma ʃuft-a-ha ɛiryaana* I went crazy with desire when I saw her naked. *ʔitfagaɛ lamma famm il-laḥma l-mafwiyya* appetite overwhelmed him when he smelled the grilled meat. **2** to become a glutton. *kaanit nifs-u ɛafiifa fil-ʔakl¹ w-min saaɛit ma mifi wayyaahum itfagaɛ* he had a delicate appetite (at first), but from the moment he started going around with them he turned into a glutton. - ava/iva *mitfigiɛ*.

انفجع *ʔinfagaɛ²* = *ʔitfagaɛ²*. - ava/iva *minfigiɛ*.

ف ج ع ن see also ² ف ج ع

فجعنة *fagɛana* /n/ gluttony, greed.

اتفجعن *ʔitfagɛan* /vi/ to be gluttonous, eat ravenously. - ava *mitfagɛan*.

ف ج ف ج

فجفج *fagfig* /vi/ to spread all over (of odours, light, and the like). - vn *fagfaga*; ava *mifagfig*.

اتفجفج *ʔitfagfig* /vi/ = *fagfig*. - ava *mitfagfig*.

ف ج ل

فجل *figl* /coll n/ radish(es). *lubya ya figl¹ lubya [vendor's cry]* radishes (as tender as) black-eyed peas! *figl¹ baladi* type of white elongated radish native to Egypt. *figl afrangi* round red-skinned radishes.

فجلة *figla* /unit n, pl *-aat*/ a radish.

فجلاية *figlaaya* = *figla*.

ف ج و

فجوة *fagwa* /n pl *-aat*/ gap, breach.

ف ج و ر

فجورة *faguura* <It *figura*> /n/ court card, face card.

ف ح ت

فحت *faḥat* *(a)* **1** /vt/ to dig, dig up, excavate (especially a wide area). *faḥatu f-faariɛ kull-u* they dug up the whole street. **2** /vi/ to dig, dig around (especially over a wide area). *ɛammaliin bi-yifḥatu f-waadi l-miluuk yidawwaru ɛala maqaabir gidiida* they're always digging in the Valley of the Kings in search of new tombs. ‖*ʔil-faaḥiṭ naazil wil-baani ṭaaliɛ [prov]* (the digger de-

scends and the builder rises) ≈ the malicious will come to harm and the good will flourish. - vn *faḫataan, faḫt*; ava *faaḫit*; pva *maḫfuut*.

فحت *faḫt* /n pl *fuḫuut*/ hole, trench, excavation.

فحتة *faḫta* /inst n, pl *-aat*/ an excavation, a dig.

اتفحت *ʔitfaḫat* /vi/ to be dug, be dug up, be excavated. - iva *mitfiḫit*.

انفحت *ʔinfaḫat* = *ʔitfaḫat*. - iva *minfiḫit*.

فحّت *faḫḫat* **1** /vt/ to dig up or excavate repeatedly. **2** /vi/ to dig around. - vn *tafḫiit*; ava/pva *mifaḫḫat*.

اتفحّت *ʔitfaḫḫat* /vi/ passive of *faḫḫat* **1**. - iva *mitfaḫḫat*.

ف ح ر

فحر *faḫar (a, u)* /vt/ **1** to dig. *bi-yifḫaru f-faariɛ ɛaʃaan il-mawasiir* they dig up the street on account of the pipes. ‖ *ʔallaah yifḫar rooḥ-u* God's curse on his soul! (of one deceased). **2** to make a groove or grooves in, chisel, carve, etc. — /vi/ **3** to dig, make holes. *ma-tifḫar-ʃ*^{i} *fil-ḥeeṭa* stop scratching holes in the wall! ‖ *bi-yifḫar waraaya* he's scheming behind my back. - *bi-yifḫar ɛaleeha* he's looking for it everywhere. - vn *faḫr*; ava *faaḫir*; pva *maffuur*.

مفحور *maffuur* /adj * and pl *mafaḫiir*/ accursed, damned (of a deceased person). *wil-maffuur gooz-ik kunti ɛayʃa maɛaa ʔizzaay* ≈ your late husband - damn his black soul - how could you live with him? - *ya wlaad il-mafaḫiir* ≈ you offspring of the damned!

فحرة *fuḫra* /n pl *-aat, fuḫar*/ hole.

فحيرة *faḫiira* /n pl *faḫaayir*/ ditch, trench.

مفحار *mufḫaar* /n pl *mafaḫiir*/ carpenter's chisel.

اتفحر *ʔitfaḫar* /vi/ passive of *faḫar*. - iva *mitfiḫir*.

انفحر *ʔinfaḫar* = *ʔitfaḫar*. - iva *minfiḫir*.

فحّر *faḫḫar* /vt/ to dig repeatedly or in several places. *ʔil-ʔaraanib faḫḫarit il-ʔarḍiyya* the rabbits have dug up the ground. - vn *tafḫiir*; ava/pva *mifaḫḫar*.

اتفحّر *ʔitfaḫḫar* /vi/ passive of *faḫḫar*. - iva *mitfaḫḫar*.

ف ح ش

فحش *fuḥʃ* /n/ act of an outrageous or highly immoral sort.

فاحش *faaḥiʃ* /adj/ outrageous, extreme. *ẓulm*^{i} *faaḥiʃ* monstrous injustice.

فاحشة *faḥʃa, faaḥiʃa*↑ /n pl *fawaaḥiʃ*↑/ (act of) adultery, fornication.

فواحشي *fawaḥʃi* /adj * and pl *-yya*/ adulterous.

ف ح ص

فحص *faḥaṣ (a)* /vt/ to examine, scrutinize. *faḥaṣ il-waraɛa kwayyis ɛabl*^{i} *ma ḥaṭṭ*^{i} *ʔimḍit-u ɛaleeha* he scrutinized the paper carefully before signing it. - vn *faḥṣ*; ava *faaḥiṣ*; pva *maʃḥuuṣ*.

فحص *faḥṣ* /n pl *fuḥuuṣ*/ test, examination. *fuḥuuṣ ṭibbiyya* medical tests.

اتفحص *ʔitfaḥaṣ* /vi/ to be examined, be scrutinized. - iva *mitfiḥiṣ*.

انفحص *ʔinfaḥaṣ* = *ʔitfaḥaṣ*. - iva *minfiḥiṣ*.

ف ح ك ش

فحكش *faḥkiʃ* /vt/ *[slang]* to put into disorder, disarrange. *faɛr-a-ha mfaḥkiʃ* her hair is dishevelled. - also *faɛkiʃ*. - vn *faḥkaʃa*; ava/pva *mifaḥkiʃ*.

اتفحكش *ʔitfaḥkiʃ* /vi/ *[slang]* to become disordered, be put into disorder. - vn *tifaḥkiiʃ*; ava/iva *mitfaḥkiʃ*.

ف ح ل

فحل *faḥl* /n pl *fuḥúla*/ **1** stud bull. ‖ *faḥl*^{i} *baṣal* large onion. **2** irrigation ditch (see Pl.E, 17).

أفحل *ʔafḥal* /el/ *[deris]* more/most hulking or oafish.

فحّل *faḥḥal* /vi/ *[deris]* to grow into a hulking oaf. - vn *tafḥiil*; ava *mifaḥḥal*.

استفحل *ʔistafḥal* **1** /vi/ to go too far, get out of hand. **2** /vt/ *[deris]* **2a** to consider hulking or oafish. **2b** to select as hulking or oafish. - vn *ʔistifḥaal*; ava *mistafḥil*.

[1] ف ح م

فحم *faḥm* /coll n, pl *fuḥumaat*/ charcoal(s), coal(s). ‖ *faḥm*^{a} *ḥagari* anthracite. - *faḥm*^{i} *nabaati* charcoal. - *faḥm*^{i} *kuuk* coke.

فحمة *faḥma* /unit n, pl *-aat*/ a piece of charcoal, a piece of coal.

فحماية *faḥmaaya* = *faḥma*.

فحمي *faḥmi* /adj/ charcoal-grey.

فاحم *faaḥim* /adj/ intense, saturated (of black colour). *faɛr*^{i} *ʔiswid faaḥim* jet black hair.

فحّام *faḥḥaam* /n */ charcoal dealer, coal merchant.

فحّم *faḥḥam* **1** /vt/ to burn to ashes, reduce to charcoal. *faḥḥam il-xaʃab* he burned the wood down to charcoal. **2** /vi/ to be reduced to ashes, be reduced to charcoal. *law il-ḥaraara zaadit ɛan il-maṭluub il-bilastik bi-yfaḥḥam* if the required temperature is exceeded the plastic burns up. - vn *tafḥiim*; ava/pva *mifaḥḥam*.

اتفحّم *ʔitfaḥḥam* /vi/ to burn or be burnt to ashes, be or become reduced to charcoal. - iva/ava *mitfaḥḥam*.

[2] ف ح م

فحم *faḥam (i)* /vt/ to overcome (of weeping). - vn *faḥamaan*; ava *faaḥim*; pva *maffuum*.

اتفحم *ʔitfaḥam* /vi/ to be overcome (by weeping). - iva *mitfiḥim*.

انفحم *ʔinfaḥam* = *ʔitfaḥam*. - iva *minfiḥim*.

ف خ ت
فخت *faxat (a)* /vt/ to pierce. *faxatit ɛeen-u bi-ṣbaɛ-ha* she poked him in the eye with her finger. *raagil bi-ɛeen mafxuuta* a one-eyed man. - also *faxas*. - vn *faxataan, faxt*; ava *faaxit*; pva *mafxuut*.
اتفخت *ʔitfaxat* /vi/ to be pierced. - ava/iva *mitfixit*.
فخّت *faxxat* /vt/ to pierce (the eyes). ‖*ḫ-afaxxat-lak ɛenee-k* ≈ I'll give you hell. - vn *tafxiit*; ava/pva *mifaxxat*.
اتفخّت *ʔitfaxxat* /vi/ to be pierced (of the eyes). - iva *mitfaxxat*.

ف خ خ
فخ *faxx* /n pl *fuxuux, fixaax*/ trap, snare. *faxx^{i} taɛlab* a fox trap. *wiqiɛ fil-faxx* he fell into the trap.

ف خ د
فخد، فخذ *faxd* /fem n, pl *ʔifxaad, fixaad*/ thigh, haunch.
فخدة *faxda* /n pl *-aat, fixad*/ 1 *[butcher]* haunch, leg, shank. 2 thigh.

ف خ ذ see ف خ د

ف خ ر [1]
فخر *faxr* /n/ boasting, bragging. *bi-yḥibb il-faxr* he likes to show off. ‖... *wala faxr* ≈ and that's enough honour to speak for itself, as in *ʔana baqa bn^{i} ɛali baaʃa wala faxr* I am the son of Ali Pasha - no need to say anything more.
أفخر *ʔafxar* /el/ more/most excellent. *ʔid-duxxaan da ʔafxar nooɛ* this tobacco is the finest.
فخور *faxuur* /adj */ proud, feeling pride. *ʔiḥna faxuriin biik* we're proud of you!
فاخر *faaxir* /adj/ of outstanding quality. *ʔakl^{i} faaxir* superb food. *mubilya faxra* top quality furniture.
اتفاخر *ʔitfaaxar* /vi/ to boast, brag. *dayman yitfaaxar bi-fluus-u* he's constantly bragging about his money. - vn *tafaaxur*; ava *mitfaaxir*.
افتخر *ʔiftaxar* /vi/ to feel pride. *ʔabuu-ya miftixir biyya* my father is proud of me. - vn *ʔiftixaar*; ava *miftixir*.
مفتخر *muftaxar* 1 /adj/ = *faaxir*. ‖*ɋumaaʃ muftaxar* cheap quality cotton material for peasant galabiyas. 2 /n/ *ʔil-muftaxar* the Pullman train.

ف خ ر [2]
فخراني *faxaraani* /n pl *-yya*/ potter, manufacturer of pottery.
فاخورة *faxuura* /n pl *fawaxiir*/ pottery workshop. *loola k-kasuura ma-kaanit il-faxuura [prov]* were it not for breakages, there would be no potteries.
فاخوري *faxuuri* /n pl *-yya*/ potter.
فخار *fuxxaar* /n/ fired clay, earthenware.

ف خ س
فخس *faxas (i)* /vt/ 1 to pierce (the eye). - also *faxat*. 2 to cause to sink. *ḫ-axfis biih il-ʔarḍ* I'll ram him into the ground! *ʔitwalad wi-qurt-u mafxuusa* he was born with a low forehead. - vn *faxs, faxasaan*; ava *faaxis*; pva *mafxuus*.
اتفخس *ʔitfaxas* /vi/ passive of *faxas*. - iva *mitfixis*.
انفخس *ʔinfaxas* = *ʔitfaxas*. - iva *minfixis*.

ف خ ف خ
فخفخة *faxfaxa* /vn/ luxurious living.
اتفخفخ *ʔitfaxfax* /vi/ to live in luxury. - ava *mitfaxfax*.

ف د ح
فادح *faadiḥ* /adj/ heavy, serious. *xusaara fadḥa* heavy loss.

ف د ر
فودرة *fudra* <perh It *fodera*> /n pl *fudar*/ pressing cloth, ironing cloth.

ف د غ
فدغ *fadaɣ (a)* /vt/ to crack open, split open, burst open. *fadaɣ id-dimmil* he burst the pimple. *kaan il-baab misankar fa-raaḥ fadɣ-u b-maṭraqa fataḥit-u* the door was locked, so he broke it open with a hammer. - vn *fadɣ, fadaɣaan*; ava *faadiɣ*; pva *mafduuɣ*.
اتفدغ *ʔitfadaɣ* /vi/ to be cracked, split or burst open. - iva *mitfidiɣ*.
انفدغ *ʔinfadaɣ* = *ʔitfadaɣ*. - iva *minfidiɣ*.

ف د ن
فدّان *faddaan* /n pl *fadadiin, ʔifdina, fidn*/ land measure equal to 1.038 acres, feddan. ‖*ɋiraaṭ ḥaẓẓ^{i} wala faddaan faṭaara [prov]* ≈ an ounce of luck excels a pound of wit. - *ɋiraaṭ fil-liyya wala faddaan fil-kuruuf [prov]* ≈ quality counts more than quantity.

ف د و see ف د ي : *fadw*

ف د ي
فدى *fada (i)* /vt/ to ransom, redeem. *fadeet ṣiyaam-i b-taʔkiil ɛifriin maskiin* I redeemed my (not) fasting by feeding twenty poor souls. *ʔif-ʃuhada raaḥu fida l-maṣr* the war dead died as a ransom for Egypt. *kull-u yhuun fida lil-ɛarabiyya* any sacrifice is worth it for the car.

‖*fadaa-k* it has gone as a ransom for you, it has taken the danger that was around on itself and left you unharmed (polite expression used to one who has broken or lost something). - *ʕafdii-k bi-rooḥ-i* I would lay down my life for you, I'd do anything for you. - vn *fady, fadw, fida*; ava *faadi*; pva *mafdi*.

فدو *fadw* /n/ *[Isl]* food or money given to the poor in compensation for the omission of certain religious duties.

فادى *faadi* /n/ *[Chr]* Redeemer (epithet of Jesus Christ).

فدية *fidya* /n pl *-aat*/ ransom. *xaṭafu l-ɛayyil wi-ṭalabu fidya* they kidnapped the child and demanded a ransom.

فداء *fidaaʔ* /n/ *[Chr]* redemption.

فدائى *fidaaʔi* /n */ commando, one of the fedayeen.

فادى *faada* /vt/ to avoid (e.g., hitting s.th.). *dust[i] faraamil ɛafaan ʕafaadi l-maṭabb* I stepped on the brakes to avoid (hitting) the pot-hole. - vn *mifadiyya*; ava/pva *mifaadi*.

اتفادى *ʔitfaada* **1** /vt/ to avoid, keep away from. *bi-titfadaa-ni leeh* why are you avoiding me? **2** /vi/ passive of *faada*. - vn *tafaadi*; ava/iva *mitfaadi*.

ف ذ ل ك see ف ز ل ك

ف ر ت ت

فروتّه *firutta, furutta* <It *frutta*> /n/ **1** /coll/ fruit(s) (on a restaurant menu). **2** fruit flavours (of hard candy, ice cream). *firutta mʃakkila* assorted fruit-flavoured sweets.

[1] ف ر ت ك

فرتك *fartik* /vt/ **1** to rip apart, tear (to pieces). *ʕafartik-ak ḫitat* I'll rip you to pieces! **2** to squander (money). - also *fartin*. - vn *fartaka*; ava/pva *mifartik*.

اتفرتك *ʔitfartik* /vi/ to be ripped apart. *ʔik-kawitʃ[i] mitfartik* the tyre is in shreds. - vn *tifartiik*; ava *mitfartik*.

[2] ف ر ت ك see ف ر ت ى ك : *furteeka*

[1] ف ر ت ن

فرتن *fartin[1]* /vt/ to squander, waste. *fartinit il-ʔirfeen* she squandered the money. - also *fartik*. - vn *fartana*; ava/pva *mifartin*.

اتفرتن *ʔitfartin[1]* /vi/ to be squandered, be wasted. - iva *mitfartin*.

[2] ف ر ت ن

فرتينة *furteena* <perh T *firtna* from It> /n/ trouble, discord. *dayman tiɛmil furteena been in-naas* she is constantly trying to stir up trouble between people.

فرتن *fartin[2]* /vt/ to separate, cause a rift between. *tann-u waraahum lamma fartin-hum min baɛḍ* he wouldn't rest until he had caused a rift between them. - vn *fartana*; ava/pva *mifartin*.

اتفرتن *ʔitfartin[2]* /vi/ to be separated, be split (up). - iva *mitfartin*.

ف ر ت ى ك

فورتيكة *furteeka* <perh Gr *phourketa*> /n pl *-aat, faratiik*/ hairpin.

[1] ف ر ج

فرج *farag[1] (i)* /vt/ to alleviate, dispel. *rabb-i-na yifrig-ha* may God show (us) a way out! - /the literary passive occurs/ *furigat (wal-ḥamdu li-llaah)* everything is all right now (thank heavens)! - vn *farag, faragaan*; ava *faarig*; pva *mafruug*.

فرج *farag[2]* /n/ release, deliverance. *farag rabb-i-na* a godsend.

فرج *farg* /n pl *furuug*/ female genitalia.

فرج *firig* /adj/ large, roomy, spacious. *ʂaala firga* a large hall.

فرجيّة *faragiyya* /n pl *-aat*/ loose robe, wide gown (worn by religious figures).

فرّاج *farraag: ʔabu farraag* the Great Deliverer, epithet of el-Sayyid Badawi.

اتفرج *ʔitfarag* /vi/ to be alleviated, be dispelled. - iva *mitfirig*.

فرّج *farrag[1]* /vt/ to alleviate, dispel. *rabb-i-na yfarrag diqt-ak* may God dispel your worries! - vn *tafriig*; ava/pva *mifarrag*.

اتفرّج *ʔitfarrag[1]* /vi/ to be alleviated, be dispelled. - iva *mitfarrag*.

أفرج *ʔafrag* **1** /vt/ to provide (a problem or dilemma) with a timely solution (of God). *bi-nistanna l-ḥadd[i] ma rabb-i-na yifrig-ha ɛaleena b-fawaala kwayyisa* we're biding our time until, God willing, a suitable maid turns up. *bukra rabb-i-na yifrig-ha* ≈ tomorrow is another day. **2** /vi/ to grant release, grant freedom. *ʔafragu ɛannu b-kafaala* they released him on bail. - vn *ʔifraag*; ava *mufrig*; pva *mufrag*.

إفراج *ʔifraag* **1** /vn/ ‖ *ʔizn[i] ʔifraag* release permit (specifically for goods in customs). - *ʃihaadit ʔifraag ḍariibi* certificate showing that taxes have been paid in full (required of an heir before he can claim his inheritance). **2** /n/ release permit. *ʔifraag karantiina* quarantine release permit.

افترج *ʔiftarag* /vi/ to ease up, let up (of a problem, crisis

etc.). ‖*ma daaqit ʕilla ma ftaragit [prov]* ≈ the darkest hour comes before dawn. - vn *ʕiftiraag*; ava *miftirig*.

مفترج *muftarag: leela muftaraga* night of joy.

ف ر ج [2]

فرجة *furga* /n/ **1** /vn/ viewing. *furgit iz-zaffa kwayyisa min il-balakoona* there is a good view of the bridal procession from the balcony. *madaam ʕintu miʃ qadd il-furga waqfiin tibaḫlaqu leeh* since you can't afford to watch (the show), why are you standing and staring? **2** sight, show, spectacle. *lamma daxalit ḫamaat-u fil-xinaaqa baqit furga* when his mother-in-law joined in the row it became a (real) spectacle! ‖*ʕarabiyya furga* a stylish car.

فرّج *farrag*[2] /vt/ to show, cause to look. *farrag-ni ʕala l-ʕiwaq* show me the rooms! *win-nabi l-afarrag-ha* ≈ by God, I'll show her a thing or two! ‖*farrag in-naas* (or *xalq illaah) ʕalayya* he made a public spectacle of me. - *ʕilli ḫabb-u rabb-u farrag-u ʕala mulk-u [prov]* God will show his kingdom to whom He loves (i.e., he will enable him to travel). - vn *tafriig*; ava *mifarrag*.

اتفرّج *ʕitfarrag*[2] /vi/ to look, take a look. *ʕaawiz ʕatfarrag ʃiwayya min if-fibbaak* I want to look out of the window a bit. *taʕaala ʕitfarrag ʕala beet-i g-gidiid* come and have a look at my new house. ‖*xalla lli ma yiftiri yitfarrag* to make a public spectacle, make a scene, as in *ḫ-astanna li-ḫadd*[i] *ʕaaxir if-fahr*[i] *w-ʕiza ma-dafaʕt*[i]*-ʃ ḫ-axalli lli ma yiftiri yitfarrag* I'll give you till the end of the month and if you don't pay I'll make a real scene. - ava *mitfarrag*.

متفرّج *mutafarrig*[†] /n */ spectator, onlooker, member of an audience.

ف ر ح

فرح *firiḫ (a)* /vi/ **1** to become happy, glad or joyful, rejoice. *ʕil-balad kullit-ha firḫit* the whole town rejoiced. *firiḫt*[i] *bil-hadiyya* I was overjoyed with the present. **2** to celebrate, hold a celebration. *ʕiʒ-ʒaahir ʕinn*[i] *ma-ḫadd*[i]*-ʃ fil-bilaad di yiʕraf yifraḫ min veer mikrufoon wi-xamas sammaʕaat* it seems no one in this country knows how to celebrate without a microphone and five loudspeakers. *gat il-ḫaziina tifraḫ ma-laqit-ʃ*[i] *laha maṭraḫ [prov]* ≈ one who is born to suffer will find no opportunity to rejoice. ‖*ʕayziin nifraḫ biik* we're looking forward to seeing you married. - vn *faraḫ*; ava *farḫaan*.

¶ *firiḫ fi-* to gloat over (s.o's misfortunes).

فرح *faraḫ* /n pl *ʕafraaḫ*/ **1** joy. *ʕil-faraḫ id-daayim yiʕallim ir-raqṣ [prov]* (unceasing joy teaches dancing) ≈ practice makes perfect. **2** wedding celebration. **3** festivity. *ʕin ʃa-lla fil-ʕafraaḫ* ≈ may we eat and drink with you on happy occasions (said to a host).

فرح *farḫ* /n/ joyousness. *fi-farḫ-u-hum mansiyyiin wi-f-hamm-u-hum madʕiyyiin [prov]* (you're) forgotten when they're happy, but invited to share their woes.

فرحة *farḫa* /n/ joy.

فرحان *farḫaan* /adj */ happy, joyful.

فرايحى *farayḫi* /adj invar/ cheerful, gay (of colours, music). *galabiyya zarqa farayḫi* a bright blue galabiya. ‖*ganaaza farayḫi* (or *farayḫiyya*) (1) *[joc]* a funeral where the feeling is one of relief rather than grief. (2) *[Chr]* in the Orthodox Church, a prayer for those who die during the fifty days between Easter and Pentecost, during which period funeral services do not take place.

فرّح *farraḫ* /vt/ to delight, cause joy to, make happy. *ʕir-raqṣ*[i] *b-yfarraḫ-na kull-i-na* we all like dancing. *ya xabar yifarraḫ* what joyous news! - vn *tafriiḫ*; ava/pva *mifarraḫ*.

تفاريح *tafariiḫ* /pl n/ gaiety, fun-making. *da bass*[i] *mgarrad tafariiḫ* that's just for fun. *ḫa-yraqquu-k tafariiḫ* they'll promote you just for the fun of it.

ف ر ح ف -

فرحفزة *faraḫfaza* <P *farah-afzâ*> /n/ *[mus]* mode in Arabic music beginning on G and having B flat and E flat.

ف ر خ [1]

فرخ *farx*[1] /pl *furúxa*/ **1** /n/ chick. *ʕil-farx il-faṣiiḫ fil-beeḍa yṣiiḫ [prov]* (the bright chick crows while it's still in the egg) talent shows itself early. **2** /masc and fem adj/ thickset, heavily built, stocky. — /n pl *ʕifrux*/ **3** one of the connecting pieces which make up a *mafrafiyya* design (see Pl.G, 4).

فرخة *farxa* /n pl *-aat, firaax*/ hen, chicken. *firaax ʕingiliizi* any large variety of chicken similar to Rhode Island Reds. ‖*zayy il-farxa d-dayxa* ≈ too tired to think straight, whacked, bushed.

فرّخ *farrax* **1** /vt/ to incubate (eggs). *maʕmal tafriix* chicken incubator. **2** /vi/ to incubate (of eggs). - vn *tafriix*; ava *mifarrax*.

اتفرّخ *ʕitfarrax* /vi/ to be incubated, be hatched artificially. - iva *mitfarrax*.

ف ر خ [2]

فرخ *farx*[2] /n pl *furuux, ʕufrux, furúxa*/ sheet (of paper).

ف ر د [1]

فرد *farad, firid (i)* **1** /vt/ to straighten, extend. *ʕifrid diraaʕ-ak* stretch out your arm! *ʕifrid if-firaaʕ* unfurl the sail! *faradit il-ħaṣiira fiʃ-ʃams* she spread out the mat in the sun. *faradt il-ʕagiina* I rolled (or stretched) out the dough. *faʕr-a-ha mafruud* she's had her hair straightened. ‖ *ʕifrid wiʃʃ-ak* don't frown so! cheer up! **2** /vi/ to become straight, become extended. *fuuf il-walad firid ʕizzaay* see how the boy has grown! - vn *faradaan, fard*; ava *faarid*; pva *mafruud*.

فردة *farda*[1] /pl -*aat*/ instance noun of *fard*. ‖ *kaan wiʃʃ-u mafruud farda* he grinned from ear to ear.

اتفرد *ʕitfarad* /vi/ to be straightened out, be extended. *ʕit-toob bi-yiigi malfuuf wi-baʕdeen yitfirid* the bolt of cloth comes rolled up and then it is unwound. *ʕil-ʕagiina b-titfirid bi-naʃʃaaba* the dough is rolled out with a rolling-pin. ‖ *ʕitfirid ʃiwayya* relax! unwind a bit! - iva *mitfirid*.

انفرد *ʕinfarad* = *ʕitfarad*. - iva *minfirid*.

فرّد *farrad, farrad* /vt/ to spread out. *farradu s-sibaax ʕal-ʕarḍ* they spread the manure over the ground. *farradit ir-ruzz*[a] *ʕaʃaan tinaqqii* she spread out the rice so she could pick it over. - vn *tafriid*; ava/pva *mifarrad, mifarrad*.

اتفرّد *ʕitfarrad, ʕitfarrad* /vi/ to be spread out. - iva *mitfarrad, mitfarrad*.

ف ر د [2]

فرد *fard*† /n/ **1** /pl *ʕafraad*/ a single person, an individual. *fard*[i] *min il-ʕusra* a member of the family. *raʕiis fuʕuun il-ʕafraad* personnel manager. **2** /no pl/ **2a** One (epithet of God). **2b** epithet of Rajab, the seventh month in the Muslim year.

¶ *ʕafraadan: ʕagwaazan wi-ʕafraadan* to an extreme degree.

فرد *fard* /n/ **1** /in apposition/ **1a** a single unit (as opposed to a double or compound unit). *muftaaħ fard* a single switch. *suluuk fard* single-strand wires. *siriir fard* a single bed, a bed for one person. **1b** odd number. **2** male pigeon. — /pl *furuud*/ **3** pistol. — /pl *furuud, furúda*/ **4** large type of *quffa*.

فردة *farda*[2] /n pl -*aat, firad*/ **1** one of a pair. *farditeen gazma ʃmaal* two left shoes. **2** (also *fardit kawitʃ*) (automobile) tyre. **3** *[agric]* one of the major sections into which a field is divided to facilitate the control of irrigation (see Pl.E, 18). **4** pistol. — /pl -*aat* only/ **5** piece of hashish of approximately half a kilo in weight.

فردى *fardi* /adj */ individual. *raʕy*[i] *fardi* individual opinion.

فردى *fardi* /adj/ odd (of numbers).

فردة *firda* /adv/ separately, alone, apart from others. *qaʕdiin firda l-waħdii-hum* they are sitting alone.

فردانى *faradaani* /adj invar/ **1** composed of a single unit. *sillim faradaani* a straight (as opposed to a folding) ladder. **2a** accomodating one person. *ʕooḍa faradaani* a single room. *ṭayyaara faradaani* a single-seater plane. **2b** pulled by one animal (of a vehicle). *ʕarabiyya faradaani* a one-horse (or one-donkey) cart. — /adv/ **3** alone. *huwwa ʕaayiʃ faradaani* he lives alone. *b-aħibb*[i] *ʕaakul faradaani* I like to eat alone.

فريد *fariid* /adj/ **1** lonely, solitary. *ʕaaẓib wi-ʕaayiʃ fariid waħiid* he's a bachelor living all alone and by himself. **2** unique, matchless, peerless. *fariid il-ħusn* of singular beauty. *di zahra fariida f-noʕ-ha* it's a unique kind of flower.

فرّادى *farraadi, farraadi* = *faradaani*.

انفرد *ʕinfarad*† /vi/ **1** to withdraw, retire alone (with s.o.). *ʕinfarad biyya ʕaʃaan yiqul-li l-xabar* he took me off alone to tell me the news. **2** to stand alone, be unique. *ʕil-maħall*[i] *da b-yinfirid bi-nooʕ ig-gizam di* this store is the only one to have that type of shoe. - vn *ʕinfiraad*; ava *minfirid, munfarid*.

انفرادى *ʕinfiraadi*† /adj/ individual, solitary. *ħabs infiraadi* solitary confinement.

منفرد *munfarid*† /adj */ single, individual. *tamrinaat munfarida* individual exercises.

مفرد *mifrid* /adj invar/ composed of a single unit. *mafatiiħ mifrid* single switches. *ṭayyaara b-karaasi mifrid* a plane with single seats.

مفرد *mufrad* **1** /n/ *[gram]* singular. **2** /adj/ single. *xaṭṭ*[i] *mufrad* single-track railway line.

¶ *bi-mufrad-(u)* /adv/ alone. *misaafir bi-mufrad-u* he's travelling by himself.

مفردانى *mufradaani* /adj/ single.

مفردات *mufradaat*† or *mufradaat*† /pl n/ **1** units, individual items. *mufradaat il-murattab* the individual items contained in a breakdown of the salary. **2** lexical items. *mufradaat il-luya* the lexicon, or vocabulary, of the language.

استفرد *ʕistafrad* /vi/: *ʕistafrad bi-* to take advantage of (s.o.'s being alone). *baʕd*[i] *ma miskuu ʕistafradu bii w-ḍarabuu* after they caught him, they took him off alone and beat him up. *ʃaf-ni maqtuuʕa min-ʃagara wi-stafrad biyya* he saw that I was alone in the world and took advantage of me. - vn *ʕistifraad*; ava *mistafrad*.

ف ر د و س

فردوس *firdoos* /n/ paradise.

ف ر ر [1]

فرّ *farr, farr (i)* **1** /vi/ to run fast. *firr[i] waraa ʕilḥaq-u* zip after him and catch up with him. *farr[i] minni* he sped away from me. *ʕid-dumuuɛ farrit min ɣeen-u* he wept uncontrollably. **2** /vt/ to flip through, go quickly through (a book, or the like). *ḥ-afirr ik-kitaab ɋabl[i] m-axuʃʃ il-imtiḥaan* I'll have a quick flip through the book before I go into the exam. - vn *firaar, farr*; ava *faarir*; pva *mafruur*.

فرّة *firra* /n pl *-aat, firar*/ epidemic (particularly among poultry). *firrit kulira* cholera epidemic.

فرار *faraar* /adj invar/ slippery. *dool naas faraar* they are shifty customers.

فرّيرة *furreera* /n pl *-aat, fararriir*/ **1** spinning-top. ‖*ɛadda zayy[i] il-furreera* he flashed past. **2** epidemic.

ف ر ر [2]

فرارجي *farargi* /n pl *-yya*/ poulterer.

ف ر ز [1]

فرز *faraz[1] (i)* /vt/ **1** to sort, separate into components or parts. *farz[i] ʕaṣwaat* vote-sorting. *faraz il-laban* to skim milk. **2** to scrutinize. *farazu l-ɛaruusa min taḥt[i] l-fooq* they inspected the bride from top to toe. - vn *farz, farazaan*; ava *faariz*; pva *mafruuz*.

فرز *farz* **1** /vn/ ‖*laban farz* skimmed milk. **2** /n/ *[mil]* medical test for recruits.

فرزة *farza* **1** /inst n, pl *-aat*/ a sorting. *ɋuṭn[i] ʕawwil farza* first-grade cotton. **2** /adj invar/ rejected. *xiyaar farza* small poor-quality cucumbers.

فرّازة *farraaza, farraaza* /n pl *-aat*/ machine for sorting or separating. ‖*mitnaqqiyyiin ɛal-farraaza* selected with great care.

فرّيز *farriiz* /n pl *farriiza*/ one who sorts or grades. *farriiz ɋuṭn* cotton grader.

اتفرز *ʕitfaraz* /vi/ to be sorted, be separated into components. - iva *mitfiriz*.

انفرز *ʕinfaraz* = *ʕitfaraz*. - iva *minfiriz*.

ف ر ز [2]

فريزة *fariiza* or *fireeza* <Fr *fraise*> /n pl *-aat, faraayiz*/ **1** *[metal]* milling machine. **2** *[dent]* dental unit. **3** ream (of paper).

فرّز *farraz* /vt/ **1** *[carp]* to cut a rabbet in. **2** *[metal]* to mill. - vn *tafriiz*; ava/pva *mifarraz*.

تفريزة *tafriiza* /n pl *-aat*/ *[carp]* rabbet.

اتفرّز *ʕitfarraz* /vi/ **1** *[carp]* to be rabbeted. **2** *[metal]* to be milled. - iva *mitfarraz*.

ف ر ز [3]

فرز *faraz[2] (i)* /vt/ to secrete, ooze. *ʕig-garḥ[i] b-yifriz midda* the wound is oozing pus. - ava *faariz*; pva *mafruuz*.

أفرز *ʕafraz* /vt/ to secrete, ooze. - vn *ʕifraaz*; ava *mifriz, mufriẓ*↑; pva *mufraz*↑.

إفراز *ʕifraaz* /n pl *-aat*/ secretion.

ف ر ز [4] see ف ر و ز: *faruuz, faruuz, faruuzi*

ف ر ز [5] see ف ر ي ز: *firiiz*

ف ر س [1]

فرس *faras* /n pl *ʕafraas*/ mare, (loosely) horse. ‖*faras in-nabi* praying mantis. - *faras il-baḥr* hippopotamus.

فرسة *farasa* /n pl *-aat*/ **1** mare. **2** bridge (of a stringed instrument, see Pl.J, 14).

فروسيّة *furusiyya* /n/ horsemanship.

فارس *faaris[1]* /n pl *firsaan, fursaan*/ **1** horseman. **2** knight.

فوارس *fawaaris: ʕabu l-fawaaris* Father of Horsemen (epithet of Antar (*ɛantar ibn[i] ʃaddaad*), and thus of any brave man).

ف ر س [2]

فريسة *fariisa* /n pl *-aat, faraayis*/ prey.

افترس *ʕiftaras* /vt/ to devour (of an animal). *ʕit-taɛlab iftaras il-farxa* the fox devoured the chicken. ‖ *ʕiftarasit-na fil-kalaam* she beat us hands down in the discussion. - vn *ʕiftiraas*; ava *muftaris*.

ف ر س [3]

فراسة *faraasa* /n/ intuitive understanding.

اتفرّس *ʕitfarras* /vi/ to gaze intently (into s.o.'s face). *laqeet-u b-yitfarras fi-wiʃʃ-i zayy[i] ma ykuun yiʃabbih ɛalayya* I found him scrutinizing my face as if trying to place me. - ava *mitfarras*.

ف ر س [4]

فرس *faras (i)* /vt/ to infuriate, enrage. - vn *farasaan*; ava *faaris*; pva *mafruus*.

فرسة *farsa* /inst n, pl *-aat*/ an enraging. *ʕamma faras-ni farsa* did he ever make me furious!

اتفرس *ʕitfaras* /vi/ to be or become infuriated, be or become enraged. - ava/iva *mitfiris*.

انفرس *ʕinfaras* = *ʕitfaras*. - ava/iva *minfiris*.

ف ر س [5]

فارس *faaris[2]* /prop n/ Persia.

فارسي *farsi, faarsi*↑ **1** /adj */ Persian. ‖*xaṭṭ[i] farsi* a flowing slanted Arabic script. **2a** /n */ and pl *furs*/ a Persian. ‖*bilaad il-furs [obsol]* Persia. **2b** /no pl/ the Persian language.

ف ر س ك ا
فرسكا *firiska* <perh It *fresca*> /n/ **1** type of lightweight woollen material. **2** sweet biscuit popular at beach resorts, made of two wafers stuck together with honey or other filling.

ف ر س ل ى
فرسالية *firsalya* /n/ type of stiff artificial silk (used in linings).

ف ر س ن ت
فروسنت *furusint* <Engl>: *lamba furusint* fluorescent light. - also *fulurusint*.

ف ر ش ١
فرش *faraʃ, faraʃ (i)* /vt/ **1** to spread, lay out. *bi-nifriʃ il-baṭaṭiin fooq is-suṭuuḥ* we lay the blankets out on the roof. ‖*faraʃit-lu l-milaaya* ≈ she bawled him out, cursed him and made a public spectacle of it all. **2** *[constr]* to lay out (a roof) by putting in the reinforcement rods prior to laying the concrete. **3** to furnish, provide the necessary accoutrements. *ʃaqqa mafruuʃa* a furnished flat. *faraʃit is-siriir* she made up the bed. - vn *farʃ*; ava *faariʃ*; pva *mafruuʃ*.
فرش *farʃ* /n/ **1** furnishings, appointments. *farʃ il-ʕooḍa* the furnishings of the room. *farʃ il-ʕarabiyya* the interior (furnishings and accessories) of the car. *farʃ[a] ʕaza* a set of (caterer's) furnishings for condolence ceremonies (e.g., a marquee, chairs, loudspeakers etc.). ‖*farʃ[i] gazma* insoles. **2** working surface (e.g., a counter-top, the top of a vendor's stall). **3** bedding. *hawwi l-farʃ* air the bedding. *milayaat farʃ* bed sheets. ‖*farʃ[i] w-ɤaṭa* everything. **4** *[constr]* bottom layer of a two layer grid of metal rods over which concrete is poured to form a floor or roof.
فرشة *farʃa* /n pl *-aat*/ **1** set of bedding. **2** pavement vendor's spread of merchandise. **3** = *farʃ* 4.
فراش *faraaʃ* /coll n/ **1** butterflies. **2** moth(s).
فراشة *faraaʃa* /n pl *-aat*/ **1** /unit n/ **1a** a butterfly. **1b** a moth. **2** butterfly stroke (in swimming).
فراشة *firaaʃa* /n/ **1** /pl *-aat*/ caterer's set of furnishings for a marriage, mourning ceremony, or the like (i.e., a marquee, chairs, microphones etc.). **2** /no pl/ *ʃil-firaaʃa* catering, the catering profession.
فرّاش *farraaʃ* /n */ office employee with janitorial and messenger duties, office servant.
مفرش *mafraʃ* /n pl *mafaariʃ*/ **1** table-cloth, table-mat. **2** bed spread.
اتفرش *ʃitfaraʃ* /vi/ passive of *faraʃ*. - iva *mitfiriʃ*.
انفرش *ʃinfaraʃ* = *itfaraʃ*. - iva *minfiriʃ*.

فرّش *farraʃ[1]* /vi/ to sprawl, lie spread-eagled. *ʕarabiyya xabaṭit-u nizil mifarraʃ ʕal-ʃarḍ* a car ran into him (and) he fell sprawled out on the ground. - vn *tafriiʃ*; ava *mifarraʃ*.

ف ر ش ٢
فرشة *furʃa* <T *fırça*> /n/ **1** /pl *furaʃ*/ brush. *furʃit id-daqn* shaving brush. **2** *[coarse]* frottage.
فرّش *farraʃ[2]* /vt/ **1** to brush. **2** *[coarse]* to indulge in frottage with. - vn *tafriiʃ*; ava/pva *mifarraʃ*.
مفرّشاتي *mifarʃaati* /n pl *-yya*/ frotteur.
اتفرّش *ʃitfarraʃ* /vi/ **1** to be brushed. **2** *[coarse]* to be subjected to frottage. - iva *mitfarraʃ*.

ف ر ش ح
فرشح *farʃaḥ* (also *farʃax*) **1** /vt/ to spread apart, spread open. *farʃaḥ riglee* he opened his legs. *farʃaḥit il-furʃiina* she opened the hairpin. **2** /vi/ to spread apart, spread open. - vn *farʃaḥa*; ava/pva *mifarʃaḥ*.
اتفرشح *ʃitfarʃaḥ* /vi/ to be spread apart, be spread open. - iva *mitfarʃaḥ*.

ف ر ش خ see ف ر ش ح: *farʃax*

ف ر ش ى ن
فرشينة *furʃiina* <It *forcina*> /n pl *furaʃiin*/ hairpin.

ف ر ص
فرصة *furṣa* /n pl *-aat, furaṣ*/ opportunity.
فرصجي *furṣagi* /n pl *-yya*/ opportunist.

ف ر ض
فرض *faraḍ (i)* /vt/ **1** to impose, make incumbent. *damm-u tʔiil wi-b-yifriḍ wuguud-u ʕaleena leel wi-nhaar* he's an insensitive boor and imposes his presence on us day and night. *bi-yifriḍ ʕaleehum ʃataawa* he makes them pay protection money. *ṣiyaam mafruuḍ* obligatory fasting. **2** to suppose, assume. *ʃifriḍ ʃinn ik-kalaam biitaaʕ-u ṣaḥḥ* suppose that what he says is true. *faraḍna ma-gaa-ʃ* let's suppose he doesn't come. ‖*wi-friḍ* so what! - vn *farḍ*; ava *faariḍ*; pva *mafruuḍ*.
فرض *farḍ* /n pl *furuuḍ*/ **1** duty, obligation. *ḥubb il-waṭan farḍ[a] ʕaleena* love for our country is our duty. **2** *[Isl]* obligatory ritual act (as, e.g., the five ritual prayers, giving of alms etc.). **3** assumption, supposition.
مفروض *mafruuḍ* or *ʃil-mafruuḍ* /invar/ **1** it is considered proper, the right and proper thing would be, as in *ʃil-bint[i] mafruuḍ ʃinnaha titgawwiz* a girl should get married. *mafruuḍ is-suʃaal da ma-yitʔal-ʃ* that question

ought not to be asked. *ma-kan-ʃ mafruuḍ yiruuḥ* he shouldn't have gone. *ʔil-mafruuḍ illi yibtidi ḥaaga yxallaṣ-ha* one should finish what one begins. **2** it is assumed, the assumption is, as in *kaan mafruuḍ nikuun waṣalna maṣr min saʕteen* we should have reached Cairo two hours ago. *ʔil-mafruuḍ ʔinnu yiigi l-lelaa-di* he's supposed to be coming tonight. *ʔil-mafruuḍ ʔinnu ʕayyaan bass ʃuft-u fiʃ-ʃaariʕ* he's supposed to be sick, but I saw him in the street.

اتفرض *ʔitfaraḍ* /vi/ to be imposed. *ḍariiba tfaraḍit ʕala l-fallaḥiin* a tax was imposed on the peasants. - iva *mitfiriḍ*.

انفرض *ʔinfaraḍ* = *ʔitfaraḍ*. - iva *minfiriḍ*.

افترض *ʔiftaraḍ* /vt/ to suppose, assume. *ʔiftaraḍna ʔinnu miʃ gayy* we assumed he wasn't coming. - vn *ʔiftiraaḍ*; ava *miftiriḍ*.

ف ر ط

فرط *faraṭ (u)* **1** /vt/ **1a** to disjoin or break up into constituent parts. *faraṭit il-ʕuqḍ* she unstrung the necklace. **1b** to undo. *tiḥibb tufruṭ faʕr-a-ha* she likes to let her hair hang loose. **1c** to scatter. *faraṭit il-ḥiduum ʕas-siriir* she flung the clothes all over the bed. ‖ *ʔafruṭ-ak* ≈ I'll break you into a million pieces! **2** /vi/ to become disjoined, break up. *kuuz id-dura lamma yinfaf bi-yufruṭ* the ear of maize, when it dries, breaks up (into separate kernels). - vn *farṭ, faraṭaan*; ava *faariṭ*; pva *mafruuṭ*.

فرط *farṭ* **1** /adv/ (bought and sold) individually (usually of cigarettes). *b-afukk il-ʕilba w-ʔabiiʕ is-sagaayir farṭ* I undo the pack and sell the cigarettes one by one. **2** /adj invar/ loose, unpackaged. *duxxaan farṭ* loose tobacco. *ʕinab farṭ* grapes which have fallen off the bunches and are sold off cheaply.

فرط *firiṭ* /adj */ **1** excessive, extreme. *wilaad-u firṭiin fiṭ-ṭuul* his sons are exceedingly tall. **2** extravagant, wasteful. *ʔiid-u firṭa* he's an extravagant spender.

فراطة *furaaṭa* = *farṭ*. ‖ *naas furaaṭa* riff-raff, rabble.

اتفرط *ʔitfaraṭ* /vi/ **1** to become disjoined, break up into component parts. *ʔiṣ-ṣuḥba tfaraṭit* the posy came apart. *ʃaddit fil-ʕuqḍ qaam itfaraṭ minha* she pulled at the necklace and it broke scattering the beads. **2** passive of *faraṭ*. - ava/iva *mitfiriṭ*.

انفرط *ʔinfaraṭ* = *ʔitfaraṭ*. - ava/iva *minfiriṭ*.

فرّط *farraṭ* /vt/ to disjoin or break up (several items) into constituent parts. *bi-nfarraṭ id-dura* we strip the maize of its kernels. - vn *tafriiṭ*; ava *mifarraṭ*.

¶ *farraṭ fi-* to be negligent in keeping a hold on. *bi-yfarraṭ fi-faraf-u* he is careless with his integrity. *huwwa lissa gdiid wi-m-aqdar-ʃ afarraṭ fii* it's still new and I can't part with it.

اتفرّط *ʔitfarraṭ* /vi/ to be disjoined, be broken up into constituent parts (of several items). - iva *mitfarraṭ*.

¶ *ʔitfarraṭ fi-* (impersonal) passive of *farraṭ fi-*.

ف ر ط ح

فرطح *farṭaḥ* **1** /vt/ to flatten. *farṭaḥ-u min il-ginaab* flatten it at the sides. **2** /vi/ to become flat. - vn *farṭaḥa*; ava/pva *mifarṭaḥ*.

اتفرطح *ʔitfarṭaḥ* /vi/ **1** to be flattened. **2** to become flat. - vn *tifarṭiiḥ*; iva/ava *mitfarṭaḥ*.

ف ر ع

فرع *farʕ* /n pl *furuuʕ, ʔafruʕ, ʔufruʕ, furúʕa*↓/ **1a** branch, bough (of a tree). ‖ *ʏurzit farʕ [needlew]* stem-stitch. **1b** branch (of the Nile). *farʕ il-dumyaaṭ* the Damietta branch of the Nile. **1c** *[mus]* variant on a basic mode. *furuuʕ rast* the subsidiary modes based on the mode *rast*. **2** subdivision, branch (of a commercial establishment). *ʔil-bank il-luu furuuʕ fi-kull balad* the bank has branches in every town.

فرعى *farʕi* /adj */ branch, subsidiary. *tirʕa farʕiyya* subsidiary canal.

فرع *firiʕ* /adj */ tall, erect, well-grown.

أفرع *ʔafraʕ* /el/ more/most erect etc.

فارع *faariʕ* /adj */ tall, erect well-grown.

فرّع *farraʕ* /vi/ to branch, branch out. *ʔiʃ-ʃagara farraʕit ʕag-gineena wiʃ-ʃaariʕ* the tree (grew and) spread its branches over the garden and the street. - also *farʕan*. - vn *tafriiʕ*; ava *mifarraʕ*.

تفريعة *tafriiʕa* /n pl *-aat*/ branch, division. *tafriiʕit in-niil* branch of the Nile.

اتفرّع *ʔitfarraʕ* /vi/ to branch out, divide. *ʔin-niil bi-yitfarraʕ hina* the Nile divides here. - ava *mitfarraʕ*.

ف ر ع ن [1]

فرعون *faraʕoon, firʕoon* /n pl *faraʕna*/ **1** pharaoh. **2** tyrant. **3** giant, a mountain of a man.

فرعونى *faraʕooni, firʕooni* /adj/ pharaonic. *ʔasaar faraʕoniyya* relics of the pharaonic period.

فرعن *farʕan* [1] /vt/ to turn into a tyrant, make arrogant and wilful. *dalaʕ ʔumm-u lu farʕan-u* his mother's spoiling him made him into a little tyrant. *ʔil-ʔirfeen farʕanuu-hum* money made them think they could behave as they wanted. *ya faraʕoon ʔeef farʕan-ak*. - *ʔaal ma-ḥadd-ʃ radd-i-ni [prov]* They said, 'Tyrant, what made you tyrannical?' He said, 'No one corrected me.' - vn *farʕana*; ava/iva *mifarʕan*.

اتفرعن *ʔitfarʕan* /vi/ to behave like a tyrant, behave wilfully and arrogantly. - vn *tifarʕiin*; ava *mitfarʕan*.

ف ر ع ن [2]

فرعن *farʕan*[2] /vi/ to flourish and spread (of a plant). - also *farraʕ*. - vn *farʕana*; ava *mifarʕan*.

ف ر غ

فرغ *firiɣ (a)* /vi/ **1** to become empty. *ʔiʃ-ʃiwaal firiɣ* the sack emptied. *ʔil-baṭṭariyya firɣit* the battery has discharged. *ʠazaayiz farɣa* empty bottles. ‖*tuuta tuuta firɣit il-ħadduuta* terminating phrase for a children's story ≈ (and) so the tale is done. - *firiɣ il-hizaar - ma baʠa ʔilla g-gadd [prov]* ≈ the time for joking is over. **2** to become unoccupied, become at leisure. *ħ-akallim-ak lamma ʔafraɣ miʃ-fuɣlaana di* I'll speak to you when I'm finished with this job. - vn *furuuɣ, faraɣaan*; ava *faariɣ*; pva *mafruuɣ*.

فروغ *furuuɣ* /vn/ ‖*bi-furuuɣ ʂabr* impatiently.

فروغيّة *furuɣiyya* /n/ emptiness. ‖*furuɣiyyit ʕeen* insatiable greed.

فارغ *faariɣ* **1** /ava/ ‖*ʕeen-u farɣa* he is insatiably greedy. **2** /adj/ void of meaning, inane, senseless. *kalaam faariɣ* senseless talk or behaviour, nonsense. ‖*ʔil-ħikaaya kull-a-ha farɣa* the whole thing's totally unimportant.

فارغة *farɣa* /n pl *-aat*/ kerosene tank (of a primus stove).

فوارغ *fawaariɣ* /pl n/ empty bottles. *lamma tʕuuz tiʃtiri biira laazim tigiib il-fawaariɣ maʕaak* when you want to buy beer you must bring the empties with you.

مفروغ *mafruuɣ* /pva/ ‖*ʔamr[i] mafruuɣ minnu* (1) something virtually, or as good as, done. (2) a matter of complete agreement.

أفرغ *ʔafraɣ* /el/ more/most senseless, inane or meaningless.

فراغ *faraaɣ* /n/ **1** emptiness, space. *fii faraaɣ been sinaan-u* he's gap-toothed. **2** leisure, freedom from work. *waʠt il-faraaɣ* free time.

فراغة *faraaɣa* /n/ **1** emptiness. ‖*faraaɣit ʕeen* insatiable greed. **2** /pl *-aat*/ empty space. *ʔimḍi fil-faraaɣa di* sign in this space. *ħuṭṭ il-ʕarabiyya fil-faraaɣa hnaak* park the car in the space over there.

فرّغ *farraɣ* or *farraɣ* /vt/ **1a** to empty out (contents). *farraɣt il-filuus min geeb-i* I emptied the money out of my pocket. *farraɣ kimmiyyit ṭiina tanya* pour out another quantity of clay! **1b** to empty out the contents of. *farraɣ il-bakar* he unwound the spools. *farraɣ il-musaddas fii* he emptied the gun into him. *tafriiɣ il-markib* the unloading of the ship. **2** to free, make unoccupied. *ħ-afarraɣ nafs-i l-xidmit-hum* I'll devote myself to serving them. **3a** to transfer (contents, by copying). *farraɣ nimar it-ṭalaba fi-kfuuf xaṣṣa* he transferred the students' marks to special lists. **3b** to transfer the contents of (by copying). *farraɣ-li f-ʃiriiṭ* he copied the tape for me. **4** to hollow out, make a hollow in. *laazim tifarraɣ ħawaleen kull[i] fatla* you must make a hollow around each seedling. *ṭuub mifarraɣ* hollow brick. — /vi/ **5** to discharge contents. *ʔil-musaddas farraɣ fi-wiʃʃ-u* the gun went off in his face. **6** to become hollow. *xuduud-u farraɣit* his cheeks became hollow. - vn *tafriiɣ*; ava/pva *mifarraɣ, mifarraɣ*.

تفريغ *tafriiɣ* /n/ *[med]* dilation and curettage (D and C).

تفريغة *tafriiɣa* /n/ concavity, hollow.

اتفرّغ *ʔitfarraɣ* or *ʔitfarraɣ* /vi/ **1a** to be or become emptied out (of contents). **1b** to be emptied (of a container). **2a** to be transferred (by copying, of contents). **2b** to be transferred (by having the contents copied). *ʔil-lista tfarraɣit fid-daftar* the list was transferred to the ledger. **3** to become hollow, be hollowed out. **4** to gain leisure time, disengage oneself (for a particular activity). *ʔil-minħa xallit-ni ʔatfarraɣ lik-kitaaba* the grant left me free to write. - ava/iva *mitfarraɣ, mitfarraɣ*.

تفرّغ *tafarruɣ* /n pl *-aat*/ **1** (also *minħit tafarruɣ*) grant, scholarship. **2** (also *badal tafarruɣ*) subsidy.

استفرغ *ʔistafraɣ, ʔistafraɣ* /vi/ to vomit. - vn *ʔistifraaɣ*; ava *mistafraɣ*.

ف ر ف ت

فرفت *farfit* /vt/ to break into tiny pieces, crumble. - also *fatfit*. - vn *farfata*; ava/pva *mifarfit*.

فرفوتة *farfuuta* /n pl *farafiit*/ tiny piece, crumb. - also *fatfuuta*.

اتفرفت *ʔitfarfit* /vi/ to be broken into tiny pieces, be crumbled. - also *ʔitfatfit*. - vn *tifarfiit*; iva *mitfarfit*.

ف ر ف ر [1]

فرفر *farfar, farfir* /vi/ **1** to flutter the wings. **2** to shake oneself, squirm. **3** to be convulsed before dying (of an animal). — /vt/ **4** to gin (cotton). - vn *farfara*; ava/pva *mifarfar, mifarfir*.

اتفرفر *ʔitfarfar* /vi/ to be ginned (of cotton). - iva *mitfarfar*.

ف ر ف ر [2]

فرفر *firfir* /n pl *faraafir*/ revolver, handgun. - also *rifulfar*.

ف ر ف ش

فرفش *farfiʃ* **1** /vt/ to make happy, cheer up. *kaan ħaziin ħawilt afarfiʃ-u* he was depressed, so I tried to cheer

him up. **2** /vi/ to become happy or cheerful, enjoy oneself. *taɛaala nifrab wi-nfarfif il-lelaa-di* come, let's drink and be merry tonight. - vn *farfafa*; ava *mifarfif*.

اتفرفش *ʔitfarfif* /vi/ **1** to become happy, cheer up. **2** to be made happy. - vn *tifarfiif*; ava/iva *mitfarfif*.

ف ر ف ط

فرفط *farfaṭ* /vt/ to spread out or scatter. *farfaṭt[i] il-xaraz quddaami ɛafaan ʔanaqqi k-kubaar* I spread the beads out in front of me so I could pick out the big ones. ‖*farfaṭt-i-lu snaan-u* I knocked his teeth out. - vn *farfaṭa*; ava/pva *mifarfaṭ*.

اتفرفط *ʔitfarfaṭ* /vi/ to be or become widely spread out, be or become scattered. *ʔil-birfaam wiqiɛ min ʔiid-i wi-tfarfaṭ ɛal-ʔarḍ* the pills fell from my hand and scattered over the ground. - vn *tifarfiiṭ*; ava/iva *mitfarfaṭ*.

ف ر ق

فرق *faraq (i)* **1** /vi/ to differ, be different. *faxṣiyyit-u b-tifriq ɛan faxṣiyyit-i* his personality differs from mine. ‖*ma-tifriq-ʃ* it makes no difference. - *raagil ɛan raagil yifriq* there are men and then there are men! **2** /vt/ **2a** to separate. *ʔil-ḥarb[i] faraqit-na ɛan baɛḍ* the war separated us. **2b** to make a parting in (hair). - vn *farq*; ava *faariq*; pva *mafruuq*.

فرق *farq* /n pl *firuuq, furuuq, firuqaat, furuqaat*/ **1** difference, variation. *ma-fii-ʃ farq* there's no difference. **2** balance. *badil-ni ɛala fanṭit-ak w-adfaɛ-lak il-farq* give me your bag in exchange and I'll pay the difference. **3a** break, divide, gap. *fii farq[i] waasiɛ been iṣ-ṣaffeen* there's a wide gap between the two rows. **3b** parting (in the hair).

فارق *faariq[1]* /n pl *fawaariq*/ = *farq*.

فرقة *firqa* /n pl *firaq*/ **1** (organized) group, troupe. *firqit tamsiil* an acting troupe. *firqit daggaliin* a band of swindlers. **2** team. *firqit koora* football team. **3** *[mil]* division (of an army). **4** *[mil]* training course (in the work of a particular unit). *xadt[i] firqa dfaaɛ madani* I took a course in civil defence.

فراق *firaaq* or *furaaq* /n/ separation, parting. *ʔil-firaaq ṣaɛb* parting is difficult. ‖ *ʔahi leela w-firaq-ha ṣubḥ [prov]* ≈ after the dark the dawn.

فاروقيّة *faruqiyya* /n/ *[obsol]* forage cap.

فريق *fariiq* /n/ **1** /pl *firaq*/ *[sport]* team. **2** /pl *furaqaaʔ*/ *[mil]* general.

اتفرق *ʔitfaraq* /vi/ **1** to separate, be separated. **2** to be parted (of hair). - ava/iva *mitfiriq*.

انفرق *ʔinfaraq* = *ʔitfaraq*. - ava/iva *minfiriq*.

فرّق *farraq* /vt/ **1** to cause to separate, break up. *ʔil-buliis farraqu l-muzahra* the police broke up the demonstration. **2** to distribute. *farraqna l-ʔakl[a] ɛal-ɣalaaba* we distributed the food among the poor. *farraq ik-kutʃiina* deal out the cards! — /vi/ **3** to bring about a separation. *ʔil-ʔayyaam farraqit benna* time separated us. **4** to make a distinction, differentiate. *ma-tiɛraf-ʃ[i] tfarraq benna* she can't tell us apart. - vn *tafriiq*; ava/pva *mifarraq*.

اتفرّق *ʔitfarraq* /vi/ to be made to separate or separate, be dispersed or disperse. *min ʃiddit iz-zaḥma tfarraqna* the crowd was so thick we were forced to split up. *baɛd il-ʔahl[i] ma maatu ʔitfarraqit il-ɛeela* after the parents died the family split up. - ava/iva *mitfarraq*.

فارق *faariq[2]* /vi/ to separate oneself from, depart from. ‖ *(ruuḥ) fariq-na* get lost! - *ʔiʃ-ʃibbaak mifaariq* there is a gap between the window-frame and the wall. - vn *mufarqa, mifarqa*; ava *mifaariq*.

مفارقة *mufaaraqa* /n pl *-aat*/ absurdity. *ʔid-dunya malyaana mufaaraqaat* life is full of absurdities.

اتفارق *ʔitfaariq* /vi/ passive of *faariq[2]*. - iva *mitfaariq*.

افترق *ʔiftaraq* /vi/ **1** to differ. *ʔil-madrasteen bi-yiftirqu ktiir ɛan baɛḍ-u-hum* there's quite a difference between the two schools. **2** to part company. *ma-b-yiftirquu-ʃ ɛan baɛḍ[i] xaaliṣ* they're never out of each other's sight. - vn *ʔiftiraaq*; ava *miftiriq*.

ف ر ق ط

فرقاطة *furqaaṭaʔ* <It *fregata*> /n pl *-aat*/ frigate.

ف ر ق ع

فرقع *farqaɛ* **1** /vt/ **1a** to cause to burst, cause to explode. *farqaɛ ballont-i* he popped my balloon. ‖ *farqaɛú-u* she blew the date with him, she stood him up. - *farqaɛú-u baɛd[i] ʔarbaɛ siniin ɣaraam* she broke with him after four years of passion. **1b** to cause to make an explosive sound. *farqaɛ ik-kurbaag* he cracked the whip. **2** /vi/ **2a** to burst, snap. *ʔil-ɛagala ḥa-tfarqaɛ* the tyre is about to burst. *ʔil-ḥabl[i] farqaɛ* the rope snapped. **2b** to make an explosive sound. *simiɛt il-farqaɛa btaaɛit ik-kurbaag* I heard the cracking of the whip. - vn *farqaɛa*; ava *mifarqaɛ*.

فرقعة *farqaɛa* /n pl *-aat, faraqiiɛ*/ explosion.

فرقع *furquɛ: furquɛ looz* type of black beetle which, when overturned, jumps with a cracking sound to right itself. *zayy[i] furquɛ looz* always jumping about.

فرقيعة *furqeeɛa* /n pl *-aat*/ = *farqaɛa*.

مفرقعات *mufarqaɛaat, mufarqaɛaat* /pl n/ explosives, fireworks.

اتفرقع *ʔitfarqaɛ* /vi/ passive of *farqaɛ*. - vn *tifarqiiɛ*; iva *mitfarqaɛ*.

ف ر ق ل
فرقلة *farçilla* /n pl *-aat, faraqill, faraaqil*/ drover's whip. ‖*lisaan-u zayy il-farçilla* he has a vicious tongue.

ف ر ك
فرك *farak, farak (u, i)* /vt/ **1** to rub. *ʕittaawib wi-farak ʒenee* he yawned and rubbed his eyes. **2** to rub to bits, crumble. *ʕufruki l-ʒeef* crumble the bread. - vn *fark, firaaka*; ava *faarik*; pva *mafruuk*.
فركة *farka* /inst n, pl *-aat*/ a rubbing, a rub. ‖*farkit kaʕb* (a rubbing of the heel) a short distance, a stone's throw.
مفروكة *mafruuka* /n/ *[rur]* type of fine maize couscous, usually eaten with milk and sugar.
فراكة *furaaka* /n/ fragments of matter cleaned off a surface by rubbing. *furaakit ħalla* cooking-pot scourings.
فريك *firiik* /n/ green wheat which has been cut and roasted.
مفراك *mufraak* /n pl *mafaarik*/ wooden whisk twirled between the hands (used, especially, to break up cooked mallow) (see Pl.B, 6).
اتفرك *ʕitfarak, ʕitfarak* /vi/ **1** passive of *farak*. **2** to become crumbly. *tibissi d-diqiiq wis-samnⁱ maʕa baʕdⁱ l-ħaddⁱ ma yitfirik* you work the flour and clarified butter together until it becomes crumbly. - ava/iva *mitfirik*.
انفرك *ʕinfarak, ʕinfarak* = *ʕitfarak*. - ava/iva *minfirik*.

ف ر ك ش
فركش *farkiʃ* /vt/ to scatter, disperse. *nizil fiihum bi-ḍarb iʃ-ʃuum ʒaʃaan yifarkiʃ-hum* he went at them with a cudgel to disperse them. - vn *farkaʃa*; ava *mifarkiʃ*.
فركيشة *furkeeʃa* /n/ *[slang]* disarray, shambles.
اتفركش *ʕitfarkiʃ* /vi/ to be scattered, be dispersed. - vn *tifarkiiʃ*; iva *mitfarkiʃ*.

ف ر م [1]
فرم *faram (u)* /vt/ to mince, grind (e.g., meat). *laħma mafruuma* minced meat. - vn *farm*; ava *faarim*; pva *mafruum*.
مفرمة *maframa* /n pl *mafaarim*/ mincer, meat grinder.
اتفرم *ʕitfaram* /vi/ to be minced, be ground. - iva *mitfirim*.

انفرم *ʕinfaram* = *ʕitfaram*. - iva *minfirim*.

ف ر م ( ) [2]
فورمة *furma* <It *forma*> /n pl *-aat, furam*/ **1a** matrix, mould, pattern. **1b** *[print]* forme. **2** hair style. **3** physical condition, fitness. ‖*fil-furma* in (good) shape, fit.
فرمة *firma* <It *firma*> /n pl *-aat, firam*/ **1** decorative form or shape. **2** signature characterized by flourishes.

ف ر م ا ن
فرمان *faramaan* <T *ferman* from P> /n pl *-aat*/ **1** *[obsol]* firman. **2** *[joc]* pronouncement.

ف ر م س ـ
فرمسيلا *farmisilla* (also *fukulaata farmisilla*) <Fr *vermicelle*> /n/ chocolate vermicelli, chocolate strands (for cake decoration).

ف ر م ل
فرملة *farmala* /n pl *faraamil*/ brake.
فرملجي *farmalgi* /n pl *-yya*/ brakeman (on a train).
فرمل *farmil* /vi/ **1** to brake, apply the brakes. *yadoobak farmilt*ⁱ *ʔabl*ⁱ *m-ʕaxbaṭ fii* I only just managed to brake before I ran into it. — /vt/ **2** to apply the brake to. *ma-tfarmil-f il-ʒarabiyya ʒaʃaan ʕarkin-haa-lak kiwayyis* don't leave the hand-brake on, so that I can park the car nicely for you. **3** to block, obstruct. ‖*ʒamal farmala [soccer]* to make a blocking play. - vn *farmala*; ava/pva *mifarmil*.
اتفرمل *ʕitfarmil* /vi/ passive of *farmil* 2 and 3. - iva *mitfarmil*.

ف ر م ن see ف ر م ا ن : *faramaan*

ف ر ن [1]
فرن *furn* /n pl *ʕafraan, firaan*/ **1a** oven (for an illustration of a traditional mud oven see Pl.C, 6). *makaroona fil-furn* baked macaroni. ‖*tiħbal fil-furn*ⁱ *w-tiwlid fi-gurn [prov]* (she conceives in the oven and gives birth in the village square) ≈ your sins will find you out. **1b** kiln. **2** bakery. *furnⁱ baladi* a bakery making traditional types of bread. *furn afrangi* a bakery making western types of bread.
فرّان *farraan* /n */ baker.

ف ر ن [2] see ف ا ر : *firaan*

ف ر ن ج see also ء ف ر ن ج
فرنجة *farnaga* /vn/ aping of Westerners.
اتفرنج *ʕitfarnag* /vi/ to ape the Europeans, affect European manners and tastes. - vn *tafarnug*; ava *mitfarnag*.
متفرنج *mitfarnag* /adj */ Europeanized, Westernized.

ف ر ن د
فرندة *faranda, varanda* <It> /n pl *-aat*/ veranda. - also *baranda*.

ف ر ن س
فرنسا *faransa* /prop n/ France.
فرنسى *faransi, firinsi* **1** /adj */ French. **2** /n */ Frenchman.
فرنساوى *faransaawi* **1** /adj */ French. *naas faransawiyyiin* French people. *sitt*^{i} *faransawiyya* a Frenchwoman. *farankaat faransaawi* French francs. ‖*muftaaḥ faransaawi* adjustable spanner, monkey wrench. **2** /n */ a Frenchman. **3** /n, no pl/ the French language.

ف ر ن ش
فرنشة *faranʃa* <perh Fr *frange*> /n pl *-aat*/ (decorative) fringe, braid.

ف ر ن ك
فرنك *firank, farank* <Fr> /n pl *-aat*/ franc. *firankaat siwisriyya* Swiss francs. ‖*nuṣṣ*^{a} *frank [obsol]* two piastres, a two-piastre coin.

ف ر ه د
فرهد *farhad* /vi/ to become totally exhausted. *farhadt*^{i} *min kutr iz-zaḥma* I was completely worn out by all the crowds. - vn *farhada*; ava *mifarhad*.
اتفرهد *ʔitfarhad* = *farhad*. - vn *tifarhiid*; ava *mitfarhad*.

ف ر و
فرو *farw* /coll n/ fur(s), fleece(s).
فروة *farwa* /unit n, pl *faraawi*/ a fur, a fleece. *farwit xaruuf* a sheepskin. ‖ *ʔabu farwa* chestnut(s). - *qaṭṭaʕ fi-farwit(-u)* to speak badly of (s.o.) behind his back, spread scandal about (s.o.).

ف ر و د
فرود *firwid* <Engl> **1** /n pl *farawda*/ *[soccer]* forward (player). **2** *farawda* /pl n/ minions.

ف ر و ز
فيروز *faruuz, faruuz* <P *firoza*> /n/ turquoise.
فيروزى *faruuzi* /adj invar/ turquoise.

ف ر و ل [1]
فرول *farwil* **1** /vt/ to crumble (between the fingers). **2** /vi/ to become crumbly. *ʔil-fiṭiir mifarwil xaaliṣ* the pastry is very crumbly. - also *barwil*. - vn *farwala*; ava/pva *mifarwil*.
اتفرول *ʔitfarwil* /vi/ to be crumbled or become crumbly. - also *ʔitbarwil*. - ava/iva *mitfarwil*.

ف ر و ل [2]
فراولة *firawla, farawla* <It *fragola*> /coll n/ **1** strawberries. **2** a drink of fresh strawberry juice.
فراولاية *firawlaaya, farawlaaya, farawlaaya* /unit n, pl *-aat*/ a strawberry.
فراوليّاية *firawliyyaaya, farawliyyaaya, farawliyyaaya* = *firawlaaya*.

ف ر ى
افترى *ʔiftara* /vi/ **1** to act unjustly. *bitaaʕ il-xuḍaar bi-yiftiri fil-ʔasʕaar* the greengrocer charges unfair prices. **2** to go to excess. *ʔiftareena fil-ʔakl*^{i} *lamma kaan ḥa-ygi-lna tuxma* we stuffed ourselves with food till we almost got indigestion. **3** to make an unjust accusation. *ʔiftaru ʕala l-ʕaskari ʔinnu xad rafwa* they unjustly accused the policeman of taking a bribe. - vn *ʔiftira, ʔiftiraʔ*; ava *miftiri*.
مفترى *muftari* /adj */ **1** ruthless and unjust. **2** having insatiable appetite(s). *muftari fil-ʔakl* gluttonous.

ف ر ى ز
فريز *firiiz* <prob Fr> /n pl *-aat*/ frieze, skirt (of furniture).

ف ر ى ز ر
فريزر *firiizar, fireezar* <Engl> /n/ freezing compartment in a refrigerator.

ف ز ت see ف ز ى ت: *fiziita*

ف ز د ق
فستق *fuzduq* (also *fustuq*) /coll n/ pistachio(s).
فستقة *fuzduqa* (also *fustuqa*) /unit n, pl *-aat*/ a pistachio.
فستقاية *fuzduqaaya* (also *fustuqaaya*) = *fuzduqa*.
فستقى *fuzduqi* /adj/ pistachio-coloured, pale green.

ف ز ر [1]
فزر *fazar (u)* /vt/ to burst. *ʕagala mafzuura* a burst tyre. *fazart il-balloona* I popped the balloon. - vn *fazr, fazaraan*; ava *faazir*; pva *mafzuur*.
اتفزر *ʔitfazar* /vi/ to burst, be burst. *baṭn-a-ha kbiira tqul-f*^{i} *ḥa-titfizir* her stomach's so big it looks as if it's about to burst. - ava/iva *mitfizir*.
فزّر *fazzar*^{I} /vt/ to make a split in, burst open (the weave of s.th.). *libis jakittit-i w-fazzar-ha min ḍahr-a-ha* he put on my jacket and split it down the back. ‖*ḥ-afazzar-ak* I'll split your seams! I'll tear you apart!

-laḥm-a-ha mfazzar she has stretch marks on her body (as, e.g., after pregnancy). -vn *tafziir*; ava/pva *mifazzar*.
اتفزّر *ʔitfazzar* /vi/ to be split open (of weave). *waḥda mdamliga hdum-ha mitfazzara ɛaleeha* a woman so curvaceous that her clothes are bursting on her. *ʔik-kawitf^{i} raaḥ mitfazzar* the tyre shredded. -iva *mitfazzar*.

ف ز ر^{2}
فزّورة *fazzuura* /n pl *fawaziir*/ riddle, conundrum.
فزّر *fazzar*^{2}: *ḥazzar fazzar* make a guess!

ف ز ز
فزّ *fazz (i)* /vi/ to get up abruptly, spring up. *ɋuum fizz* on your feet! ‖*fizz^{i} min hina* buzz off! -vn *fazz, fazazaan*; ava *faaziz*.
فزّة *fazza* /inst n, pl *-aat*/ a springing up, a jumping up.
مفزوز *mafzuuz* /adj */ restive, jumpy, nervous.
فزّز *fazziz* /vt/ **1** to kick (s.o.) out of his seat. *fazziz-u min hina* chuck him out of here! **2** to make restive or restless. *ʔil-ḥumma kaanit bi-tfazziz-u* the fever made him toss and turn. -vn *tafziiz*; ava/pva *mifazziz*.
اتفزّز *ʔitfazziz* /vi/ passive of *fazziz*. -iva *mitfazziz*.
استفزّ *ʔistafazz* /vt/ to provoke, incite. *kalaam-u stafazz-i-ni* what he said made me lose my temper. -vn *ʔistifzaaz*; ava/pva *mistafizz, mistifizz*.
استفزاز *ʔistifzaaz* /n pl *-aat*/ incitement, provocation.
استفزازى *ʔistifzaazi* /adj/ provocative.

ف ز ع
فزع *fazaɛ (a)* **1** /vt/ to frighten, startle. *ɋuwat-ha fazaɛ-na* her screams startled us. *ɋaamit min in-noom mafzuuɛa* she woke up with a start. **2** /vi/ to make a scary sound. *geet min wara w-fazaɛt^{i} fii* I came up from behind and scared him. -vn *fazaɛ*; ava *faaziɛ*; pva *mafzuuɛ*.
فزعة *fazɛa* /inst n, pl *-aat*/ a fright.
اتفزع *ʔitfazaɛ* /vi/ to be given a fright, be startled. -iva *mitfiziɛ*.
انفزع *ʔinfazaɛ* = *ʔitfazaɛ*. -iva *minfiziɛ*.
اتفزّع *ʔitfazzaɛ* /vi/ **1** to gather one's strength (before striking s.o.). *ʔitfazzaɛt^{i} w-ḍarabt-u ɋalam ɋafal ɛeen-u* I gathered all my strength and gave him a slap that closed his eye. **2** to feign an attack. -ava *mitfazzaɛ*.

ف ز ل ك
فزلك *fazlik* /vt/ *[joc]* to fuss over, go to pernickety lengths over. *ma-b-tinzil-f^{i} mil-beet ɤeer lamma tkuun mifazlika roḥ-ha ɛal-ʔaaxir* she never leaves the house without having first dolled herself up to the nines. -vn *fazlaka*; ava *mifazlik*.
فذلكة *fazlaka* /n pl *-aat, fazaalik*/ **1** *[joc]* (short) comment. *ɛandi fazlaka ɋuṣayyara ɛan il-mawduuɛ* I have a few words to say on the subject. **2** fuss, ado. **3** palm-greasing, bribery.
اتفزلك *ʔitfazlik* /vi/ *[joc]* to act in a fussy or pernickety way. -ava *mitfazlik*.

ف ز ل ن
فازلين *fazliin, vazliin*↑ <trade name *Vaseline*> /n/ **1** petroleum jelly. **2** hair cream, brilliantine.
فزلن *fazlin* /vt/ to apply *fazliin* to. -vn *fazlana, vazlana*; ava/pva *mifazlin, mivazlin*.
اتفزلن *ʔitfazlin* /vi/ passive of *fazlin*. -vn *tifazliin*; ava/pva *mitfazlin*.

ف ز ى ت
فزيتة *fiziita* <It *visita*> /n/ *[med]* consultation fee.

ف س ت ا ن
فستان *fustaan* <prob T *fiston* from It; cf Engl *fustian*> /n pl *fasatiin*/ woman's dress, frock.

ف س ت ق see ف ز د ق: *fustuq, fustuqa, fustuqaaya*

ف س ت و ن
فستون *fistoon* <Fr *feston*> /n/ *[needlew]* scallop. *ɤurzit fistoon* buttonhole-stitch.
فستونة *fistoona* = *fistoon*.

ف س ح
فسح *fasaḥ (a)* /vt/ to clear, make room in. *ʔifsaḥ iṭ-ṭariiɋ* make way! ‖*fasaḥnaa-lu magaal ɛafaan yifarik-na fir-riḥla* we gave him the opportunity of joining us on the trip. -vn *fasaḥaan*; ava *faasiḥ*; pva *mafsuuḥ*.
فسحة *fusḥa* /n pl *fusaḥ*/ **1a** stroll, outing. **1b** interval between classes, recess. **2** *[children]* **2a** act of excreting. **2b** excrement.
فسحة *fasaḥa* /n pl *-aat*/ **1** hallway, vestibule. **2** open area, open space.
أفسح *ʔafsaḥ^{1}* /el/ more/most spacious.
اتفسح *ʔitfasaḥ* /vi/ to be cleared, be made spacious. -iva *mitfisiḥ*.
انفسح *ʔinfasaḥ* = *ʔitfasaḥ*. -vn *ʔinfisaaḥ*; iva *minfisiḥ*.
فسّح *fassaḥ* **1** /vt/ **1a** to take for a stroll, take for an outing. *fassaḥ-ni fil-haram* he took me out to the Pyramids. **1b** *[criminal slang]* to take for a walk, rub out. **2** /vi/ to make room, give room. *ʔitfaɛlaɋt^{a} ɛas-sillim*

ɛaʃaan ma-fassaḫu-lii-ʃ guwwa l-ʕutubiis I hung on to the steps because they wouldn't make room for me inside the bus. - vn *tafsiiḫ*; ava *mifassaḫ*.

اتفسّح ʕitfassaḫ /vi/ **1** to stroll around, go for a stroll, go on an outing. ʕitfassaḫna ɛal-kurniiʃ we went for a stroll along the river road. **2** to relieve oneself, ease nature. ʕil-ɛayyil itfassaḫ ɛala nafs-u the child soiled himself. - ava *mitfassaḫ*.

أفسح ʕafsaḫ[2] = *fasaḫ*. - vn *ʕifsaaḫ*; ava *mufsiḫ*.

ف س خ[1]

فسخ *fasax, fisix (a)* /vt/ **1** to sunder, disjoin. *fasax iʃ-ʃatla miṭ-ṭiin* he pulled the seedling out of the soil. *ʕifsax riglee-k* open your legs! **2** *[leg]* to declare (a contract) invalid. ‖*fasaxit xuṭubit-ha* she broke off her engagement. - vn *fasx, fasaxaan*; ava *faasix*; pva *mafsuux*.

انفسخ ʕitfasax /vi/ **1** to be sundered, be disjoined. **2** *[leg]* to be declared invalid. - iva *mitfisix*.

انفسخ ʕinfasax = *ʕitfasax*. - iva *minfisix*.

فسّخ *fassax*[1] /vt/ to tear apart. ʕafassax-ak I'll tear you apart! *bi-ngiib il-ʕanfaar wi-nxallii-hum yifassaxu ʃ-ʃatl* we bring the labourers and have them break up the (bundles of) seedlings. - vn *tafsiix*; ava/pva *mifassax*.

اتفسّخ ʕitfassax[1] /vi/ to be torn apart. - ava/iva *mitfassax*.

ف س خ[2]

فسيخ *fisiix* /coll n/ salt-cured fish, especially grey mullet. ‖*yiɛmil min il-fisiix ʃarbaat [prov]* ≈ he makes silk purses out of sows' ears.

فسيخة *fisiixa* /unit n, pl *-aat*/ a salt-cured fish. ‖*naam zayy il-fisiixa* he slept like a log.

فسخاني *fasaxaani* /n pl *-yya*/ maker and seller of salt-cured fish.

فسّخ *fassax*[2] /vt/ to salt-cure (fish). - vn *tafsiix*; ava/pva *mifassax*.

اتفسّخ ʕitfassax[2] /vi/ to be salt-cured (of fish). - iva *mitfassax*.

ف س خ[3] see ف س و خ : *fasuux, fasuuxa*

ف س د

فسد *fisid (a)* /vi/ **1** to become corrupt. ʕaxlaaq-u fisdit his morals became corrupt. **2** to go off, spoil. ʕil-laḫma fisdit the meat went bad. - vn *fasaad, fasadaan*; ava *fasdaan, faasid*.

فسد *fasad (i)* /vt/ **1** to corrupt. ʕiʃ-ʃubbaan tifsid-ha l-filuus ik-kitiir too much money corrupts the young. ʕin-naas fasaad in-naas *[prov]* nothing corrupts people like people. **2** to put out of order, ruin. *miin fasad ir-radyu* who put the radio out of order? **3** to spoil, cause to go off. ʕil-ḫarr[i] fasad il-ʕakl the heat spoiled the food. - vn *fasaad*; ava *faasid*; pva *mafsuud*.

فساد *fasaad* /n/ **1** rottenness, decay. **2** decadence. **3** corruption, immorality.

فسدان *fasdaan* /adj */ **1** morally corrupted. **2** rotten, bad, spoiled, decayed. **3** out of order.

أفسد ʕafsad[1] /el/ more/most spoiled, corrupted etc.

مفسدة *mafsada* /n pl *mafaasid*/ cause of corruption, source of evil. *kutr il-fuluus mafsada liʃ-ʃubbaan* too much money corrupts the young.

أفسد ʕafsad[2] = *fasad*. - vn *ʕifsaad*; ava *mufsid*.

ف س ر

فسّر *fassar* /vt/ **1** to expound, explain in detail. *tafsiir il-qurʕaan* the exegesis of the Koran. *fassar (fi-wiʃʃ-)* to detail misfortune or possible misfortune (to s.o.'s face) thus tempting providence and jeopardizing the other's plans. **2a** to interpret (dreams). **2b** to confirm (a dream vision) in reality. **3** to show details (of a picture). ʕiṣ-ṣuura mfassara wiʃʃ-ik xaaliṣ the photo shows your face very clearly. ‖*wiʃʃ-a-ha mfassar* she has clear features. - vn *tafsiir*; ava/pva *mifassar*.

تفسير *tafsiir* /n pl *-aat, tafasiir*/ **1** explanation. **2** commentary, exegetic work.

اتفسّر ʕitfassar /vi/ passive of *fassar*. - iva *mitfassar*.

استفسر ʕistafsar **1** /vi/ to inquire. ʕil-ʕaḫsan tistafsar minnu you'd better inquire with him. **2** /vt/ to ask, consult. ruuḥ istafsar-u ɛan il-ɋaḍiyya go and ask him about the case. - vn *ʕistifsaar*; ava *mistafsar*.

استفسار *ʕistifsaar* /n pl *-aat*/ inquiry.

ف س س

فسّ *fiss* /onom/ sound of air escaping, hiss.

فسّ *fass (i)* **1** /vi/ to leak air or gas. ʕil-ɋawitf[i] raaḥ faasis the air hissed out of the tyre. **2** /vt/ to let air or gas out of (a tyre, tank etc.). *fiss-a-ha ʃwayya ɛaʃaan tiqallil iḍ-ḍaṛṭ* let a little air out of it to reduce the pressure. - vn *fasasaan*; ava *faasis*; pva *mafsuus*.

ف س ف ا ت

فوسفات *fusfaat* <Fr> /coll n/ phosphate(s).

ف س ف س

فسفس *fasfis* /vi/ to erupt (of the skin), break out in pimples. - vn *fasfasa*; ava *mifasfis*.

فسفوسة *fasfuusa* /n pl *fasafiis*/ skin eruption, pimple. *fasfuusa sooda* blackhead.

فسافيسي *fasafiisi* /adj invar/ unstable, capricious,

guided by whim. *ma-yibqaa-ſ ɛaql-ak fasafiisi* don't make a fool of youself!

ف س ف و ر

فسفور *fusfuur, fusfoor* <Fr *phosphore*> /n/ phosphorus.

فسفوري *fusfuuri* /adj/ phosphorous, phosphoric.

ف س ق [1]

فسق *fasaqˆ, fasaq (a)* /vi/ **1** to indulge in licentiousness. **2** to commit adultery, fornicate. *fasaq fiiha* he fornicated with her. - vn *fisq, fisq*; ava *faasiq, faasiq*.

فاسق *faasiq, faasiq* /n * and pl *fussaaq*/ moral offender, specifically an adulterer.

أفسق *ʔafsaq* /el/ more/most sinful, licentious etc.

اتفسق *ʔitfasaq* /vi/ (impersonal) passive of *fasaq*. *fi-ʔayyaam il-ħuruub yaama byuut fariifa b-yitfisiq fiiha* in times of war, many an honourable family becomes the victim of rape and licentiousness. - iva *mitfisiq*.

ف س ق [2]

فسقيّة *fasqiyya* /n pl *-aat, fasaaqil*/ fountain.

ف س ل

فسل *fasl* /adj invar/ asinine, silly (of a person).

أفسل *ʔafsal* /el/ more/most asinine or silly.

فسالة *fasaala* /n/ pettiness.

فسيلة *fasiila* /n pl *fasaayil*/ palm shoot (growing out from the base of the trunk).

ف س و خ

فسوخ *fasuux* /coll n/ type of black resin, used for burning as incense and for sticking charms against the evil eye onto a baby's head.

فسوخة *fasuuxa* /unit n, pl *-aat*/ a piece of *fasuux*.

ف س ي

فسى *fisi (i)* /vi/ **1** to leak air or gas (of, e.g., a tyre). **2** to break wind silently. - vn *fisa*; ava *faasi*.

فسي *fasa (i)* /vt/ to disrupt, throw into disorder. *ʔawwil ma daxal fil-liɛba fasaa-ha* as soon as he joined in the game he made a shambles of it. *fiiha l-afsii-ha [children]* let me play or I'll ruin your game! - vn *fasayaan*; ava *faasi*; pva *mafsi*.

فسى *fasya* /n pl *-aat*/ noiseless fart.

فسّى *fassa* **1** /vt/ to leak air or gas out of (e.g., a tyre, tank). **2** /vi/ **2a** to leak air or gas (of, e.g., a tyre). **2b** to break wind silently. - vn *tafsiyya*; ava/pva *mifassi*.

اتفسّى *ʔitfassa* /vi/ passive of *fassa* 1. - iva *mitfassi*.

ف ش خ

فشخ *faſax (a)* /vt/ *[coarse]* to spread open, open wide. *faſax riglee* he spread his legs. ‖*ma-tiffax-ſ[i] buqq-ak [abus]* shut your gob! (to one laughing inappropriately). - vn *faſx*; ava *faafix*; pva *maffuux*.

فشخة *faſxa* /n pl *-aat*/ **1** instance noun of *faſx*. **2** *[deris]* boast.

اتفشخ *ʔitfaſax* /vi/ **1** *[coarse]* to spread open, be spread open. **2** *[abus]* to boast, brag. - ava/iva *mitfifix*.

انفشخ *ʔinfaſax* = *ʔitfaſax*. - ava/iva *minfifix*.

فشّخ *faſſax* **1** /vt/ to spread open, open wide. **2** /vi/ to cleave gradually. *ʔil-ħeeṭa faſſaxit* the wall has developed wide cracks. - vn *taffiix*; ava *mifaſſax*.

ف ش خ ر

فشخر *faſxar* /vi/ *[abus]* to go to expense for the sake of appearances, squander money ostentatiously. - vn *faſxara*; ava *mifaſxar*.

اتفشخر *ʔitfaſxar* = *faſxar*. - ava *mitfaſxar*.

ف ش ر [1]

فشر *faſar[1] (a)* /vi/ to boast, brag, talk big. - vn *faſr*; ava *faafir*.

فشرة *faſra* /n pl *-aat*/ a tall story.

فشر *faſar[2]* **1** /interj/ nonsense! impossible! **2** /n in constr/ (that which) makes a nonsense of .... *laha ɛiima faſar il-laħma* it really beats meat for value. *dukkaan faſar maħall[i] ʔalf[i] ṣanf* a shop to put an emporium to shame.

فشّار *faſſaar* /n */ braggart, big talker.

ف ش ر [2]

فشار *fiſaar, fuſaar* /n/ popcorn.

فشّر *faſſar* **1** /vt/ to make (especially corn) pop. *dura mfaſſar* popcorn. **2** /vi/ to pop (especially of corn). - vn *taſſiir*; ava/pva *mifaſſar*.

اتفشّر *ʔitfaſſar* /vi/ passive of *faſſar*. - iva *mitfaſſar*.

ف ش ش [1]

فشّ *faſſ (i)* /vt/ **1** to deflate. *faſſ il-ɛagala* he let the air out of the tyre. ‖*faſſ[i] xill-u* (or *xaliil-u*) to vent one's anger, as in *faſſit xill-a-ha fiyya* she vented her anger on me. **2** to break, smash. *fiſſ il-ħagar da* break this stone. — /vi/ **3** to deflate, go down. *ʔil-balloona faſſit* the air went out of the balloon. *ʔil-waram faſſ* the swelling subsided. - vn *faſaſaan*; ava *faaſiſ*; pva *maffuuf*.

فشّ *fiſſ: ṭuzz[i] fiſſ* see *ṭuzz*.

فشوش *faſuuf* /adv/ in vain, to no avail. *ṭiliɛ faſuuf* or *raaħ (ɛala) faſuuf* to come to nothing, prove useless or fruitless.

مفشّ *mifaʃʃ* /adj invar/ *[slang]* given to empty talk, full of hot air.
اتفشّ *ʔitfaʃʃ* /vi/ **1** to be deflated. **2** to be smashed. - iva *mitfaʃʃ*.
انفشّ *ʔinfaʃʃ* = *ʔitfaʃʃ*. - iva *minfaʃʃ*.
فشّش *faʃʃiʃ* /vt/ **1** to deflate. **2** to smash, shatter. - also *faʃʃiʃ*. - vn *taʃʃiiʃ*; ava/pva *mifaʃʃiʃ*.
اتفشّش *ʔitfaʃʃiʃ* /vi/ **1** to be deflated. **2** to be smashed. - iva *mitfaʃʃiʃ*.

ف ش ش ²
فشّة *fiʃʃa* **1** /coll n/ lung(s), light(s). **2** /unit n, pl *-aat, fiʃaʃ*/ a lung. ‖*fiʃʃit-u ɛayma [deris]* (1) he loves to laugh, he's a jolly soul. (2) he is a braggart.

ف ش ف ش
فشفش *faʃfiʃ* /vt/ to crush, break into pieces. *faat ɛalee il-ɋaṭr¹ faʃfiʃ dimaaʁ-u* the train ran over him and crushed his head. - also *faʃʃiʃ*. - vn *faʃfaʃa*; ava/pva *mifaʃfiʃ*.
اتفشفش *ʔitfaʃfiʃ* /vi/ to be crushed, be broken in pieces. - vn *tifaʃfiiʃ*; iva *mitfaʃfiʃ*.

ف ش ق
فشق *faʃaɋ (i)* /vi/ to take a long step. - vn *faʃɋ, faʃaɋaan*; ava *faaʃiɋ*.
فشقة *faʃɋa* /n pl *-aat*/ **1** wide step, stride. *liɛbit il-faʃɋa* a children's game in which the contestants try to accomplish the longest step possible. **2** distance traversed in a stride.
فشّق *faʃʃaɋ* /vi/ **1** to walk with a waddling gait. **2** to straddle the legs. - vn *taʃʃiiɋ*; ava *mifaʃʃaɋ*.
اتفشّق *ʔitfaʃʃaɋ* = *faʃʃaɋ*. - ava *mitfaʃʃaɋ*.

ف ش ك ل
فشكل *faʃkil* /vt/ **1** to make (s.th.) go wrong, cause to fail. *ḥawlu yfaʃkilu g-gawaaza* they tried to break up the marriage. **2** to sap the energy of, debilitate. *ʔil-bard¹ faʃkil-ni* the cold made me feel rotten. — /vi/ **3** to go wrong, fail. - vn *faʃkala*; ava/pva *mifaʃkil*.
اتفشكل *ʔitfaʃkil* /vi/ **1** passive of *faʃkil* 1 and 2. **2** = *faʃkil* 3. - vn *tifaʃkiil*; ava/pva *mitfaʃkil*.

ف ش ل ¹
فشل *faʃal¹, fiʃil (a)* /vi/ to fail. *ʔilli b-yiffal fil-imtiḥaan bi-yɛiid is-sana* whoever fails the examination repeats the year. - vn *faʃal*; ava *faaʃil*.
فشل *faʃal²* /n/ failure, flop.
فاشل *faaʃil* /adj */ unsuccessful. *gawaaz bil-ɛafya maɛnaa gawaaz faaʃil* a forced marriage means an unsuccessful marriage.
أفشل *ʔaffal* /el/ more/most unsuccessful.

ف ش ل ²
فشل *fiʃl* /coll n/ dung (of beasts of burden).
فشلة *fiʃla* /unit n, pl *-aat*/ a piece of dung, a dropping.
فشلاية *fiʃlaaya* = *fiʃla*.
فشّل *faʃʃil* /vi/ to drop dung (especially of beasts of burden). ‖*kaanit bi-tirdaḥ lina wi-tfaʃʃil ʃitiima zayy it-ṭuub* she showered us with abusive language. - vn *taʃʃiil*; ava *mifaʃʃil*.

ف ش ل ل
فشلّ *fiʃill* /n pl *-aat*/ *[deris]* fatso, fatty. *ya ffill* hey fatty!
فشلّة = *fiʃill*.

ف ش ن ك
فشنك *fiʃink* <prob T *fişek*> /adj invar/ blank (of cartridges). ‖*ṭiliɛ fiʃink* it came to nothing. - *raagil fiʃink* a nobody, a wash-out, a failure.

ف ش و see ف ش ى : *faʃw*

ف ش ى
فشى *faʃa (i)* /vt/ to divulge, reveal. *gaabu sawwaaɋ ma-yiffii-ʃ il-ʔasraar* they got a driver who is discreet. - vn *faʃy, faʃayaan, faʃw*; ava *faaʃi*; pva *maffi*.
اتفشى *ʔitfaʃa* /vi/ to be divulged, be revealed, be betrayed (especially of secrets). - iva *mitfiʃi*.
أفشى *ʔaffa* = *faʃa*. - vn *ʔiffaaʔ*; ava *miffi, muffi*.
مفتشى *miftiʃi: bil-miftiʃi* bluntly, in plain words.

ف ص ا د
فصادة *faṣaada: ʔabu faṣaada [zool]* wagtail. ‖*ɛaamil zayy ᵃ ʔabu faṣaada* he's acting like a buffoon.

ف ص ح ¹
فصح *fiṣiḥ* /adj * and pl *fuṣaḥa*/ = *faṣiiḥ*.
فصاحة *faṣaaḥa* /n/ eloquence.
فصيح *faṣiiḥ* /adj pl *fuṣaḥa*/ eloquent. ‖*bil-ɛarabi l-faṣiiḥ* (1) in literary Arabic. (2) in plain Arabic, in plain speech. - *ʔid-diik il-faṣiiḥ min il-beeḍa yṣiiḥ [prov]* ≈ talent shows itself early.
أفصح *ʔafṣaḥ¹* /el/ more/most eloquent.
الفصحى *ʔil-fuṣḥa* /n/ the literary Arabic language.
أفصح *ʔafṣaḥ²: ʔafṣaḥ ɛan↑* to give expression to. *ʔafṣaḥ ɛan illi fi-nafs-u* he came out with what was on his mind. - vn *ʔiṣṣaaḥ*; ava *muṣṣiḥ*.

ف ص ح [2]
فصح *fiṣḥ: ʕiid il-fiṣḥ [Chr]* Easter.

ف ص د [1]
فصد *faṣad (u)* /vt/ to draw (blood). *faṣd id-damm[i] mil-ʕiruuq yinazzil iḍ-ḍaγṭ* bloodletting lowers blood pressure. - vn *faṣd, fiṣaada, faṣadaan*; ava *faaṣid*; pva *mafṣuud*.
اتفصد *ʔitfaṣad* /vi/ passive of *faṣad*. - iva *mitfiṣid*.

ف ص د [2] see ف ص ا د : *faṣaada*

ف ص ص
فصّ *faṣṣ* /n pl *fuṣuuṣ*/ **1** segment, detachable piece (of a fruit or the like). *faṣṣ[i] burtuqaan* a segment of orange. *faṣṣ[i] toom* a clove of garlic. *faṣṣ[i] malḥ* a crystal of coarse salt. ‖*faṣṣ[i] malḥ[i] w-daab* ≈ he vanished into thin air. **2** pinch (of hashish, opium etc.). **3** gemstone. **4** pastern joint (of a horse, cow etc.).
فصّص *faṣṣaṣ* /vt/ **1** to divide into segments. ‖*faṣṣaṣ bisilla* to shell peas. **2** to dissect, analyse (a subject). - vn *tafṣiiṣ*; ava *mifaṣṣaṣ*.
اتفصّص *ʔitfaṣṣaṣ* /vi/ **1** to be divided into segments. **2** to be dissected, be analysed. - iva *mitfaṣṣaṣ*.

ف ص ل
فصل *faṣal (i)* /vt/ **1** to separate, detach. *bi-yifṣilu r-raas qabl[i] ma yusluxu g-gism* they detach the head before flaying the body. *ʔit-tirmustaat bi-yifṣil it-tayyaar lamma s-saxxaan yisxan qawi* the thermostat disconnects the current when the heater gets too hot. ‖*faṣl[i] quwwaat [mil]* disengagement of forces. **2** to expel, sack. *faṣaluu mik-kulliyya* they expelled him from the faculty. *ʔiʕtibir nafs-ak mafṣuul min bukra* consider yourself fired as from tomorrow. — /vi/ **3** to separate, become detached. *ʔil-lazq[i] b-yifṣil lamma yiqdam* the adhesive tape comes off when it gets old. **4** to act as a divide. *ʔil-qaṭuuʕ bi-yifṣil been il-ʕanaabir wil-mutoor* the bulkhead serves to separate the holds from the engine. **5a** to decide, be decisive. *raʔy il-qaadi huwwa lli faaṣil fil-qaḍiyya* it's the judge's opinion which is decisive in the case. **5b** to decide, arrive at a decision. *kifaaya kalaam laazim tifṣil kida ʔaw kida* that's enough talk, you must decide one way or the other. **6** to name a price. *da b-kaam. - ʔifṣil inta* 'How much is that?' 'You name your price.' - vn *faṣl, faṣalaan*; ava *faaṣil*; pva *mafṣuul*.
فصل *faṣl* /n pl *fuṣuul*/ **1a** classroom. **1b** class. **2a** act (of a play). **2b** chapter, section (of a book). **3** season (of the year). **4** trick. *ʕamal fiina faṣl* he played a trick on us.
فصلة *faṣla[1]* /inst n, pl *-aat*/ a separation, a division, an expulsion.
فاصل *faaṣil[1]* /n pl *fawaaṣil*/ **1** partition, divide. *ʕamalna faaṣil been ig-ginenteen* we made a partition between the two gardens. ‖*faaṣil musiiqi* musical interlude. **2** *[anat]* meniscus. **3**↑ section, defined part. *faaṣil min ḥayaat-i* a chapter from my life.
فاصلة *faṣla[2]* /n pl *-aat*/ comma.
فصيلة *faṣiila* /n pl *faṣaayil*/ **1** type, kind, species. *faṣiilit damm* blood group. **2** *[bot, zool]* family. **3** *[mil]* platoon.
مفصل *mafṣal*↑ /n pl *mafaaṣil*/ joint (of the body).
مفصلي *mafṣali* /adj/ pertaining to the joints (of the body). ‖*rumatizm[i] mafṣali* rheumatoid arthritis.
اتفصل *ʔitfaṣal* /vi/ **1** to be or become detached. *bi-yiṣṣar wi-byitfiṣil* it shrinks and separates. **2** to be cut off, be disconnected. *ʔik-kahraba tfaṣalit* the electricity was disconnected. **3** to be expelled, be sacked. *ʔitfaṣal min il-firqa* he was expelled from the team. **4** (impersonal) passive of *faṣal* 4, 5 and 6. - ava/iva *mitfiṣil*.
انفصل *ʔinfaṣal* = *ʔitfaṣal*. - vn *ʔinfiṣaal*; iva *minfiṣil*.
انفصال *ʔinfiṣaal* /n/ *[path]* detachment. *ʔinfiṣaal fiṭ-ṭabakiyya* detachment of the retina.

فصّل *faṣṣal* /vt/ **1** to cut and tailor to measure. *naaxud il-qumaaʃ nifaṣṣal-u ʕal-batroon* we take the cloth and cut it to the pattern. *ʕayz-ak tifaṣṣal-li jakitta* I want you to make me a jacket. **2** to have tailored. *faṣṣalt il-banṭaloon da ʕand[i] miin* where did you have those trousers made? **3** to expound, explain in detail. *faṣṣal-li l-mawḍuuʕ* he gave me a detailed account of the matter. - vn *tafṣiil*; ava/pva *mifaṣṣal*.
تفصيل *tafṣiil* **1** /vn/ ‖*bit-tafṣiil* in detail. **2** /adj invar/ made-to-measure.
تفصيلة *tafṣiila* /n pl *-aat, tafaṣiil*/ **1** cut (of a garment). *badla tafṣiila ʔamrikaani* an American-style suit. **2** detail. *tafṣilaat il-mawḍuuʕ* the details of the subject.
تفصيلي *tafṣiili* /adj/ detailed. *waṣf[i] tafṣiili* a detailed description.
مفصّل *mifaṣṣal* /pva/ ‖*mifaṣṣal ʕala* perfectly fitted to, made for, as in *ʔiṣ-ṣuγlaana di mfaṣṣala ʕalayya* this job suits me to a T.
مفصّلة *mifaṣṣala* /n pl *-aat*/ hinge.
اتفصّل *ʔitfaṣṣal* /vi/ to be cut and tailored to measure. - iva *mitfaṣṣal*.
متفصّل *mitfaṣṣal* /iva/ ‖*mitfaṣṣal ʕala* perfectly fitted to, as in *ʔij-jakitta mitfaṣṣala ʕalee* the jacket fits him perfectly.

فاصل *faaṣil*[2] **1** /vi/ to bargain, haggle. *faṣilna fis-siɛr* we bargained over the price. **2** /vt/ to bargain with, haggle with. *faṣilt it-taagir* I haggled with the dealer. - vn *fiṣaal, mifaṣla, mufaṣla*; ava *mifaaṣil*.

فصال *fiṣaal* /n/ bargaining. *ma-ɛagab-naa-ʃ fiṣaal-u* we didn't like the way he bargained. *ma-ɛanduu-ʃ fiṣaal* he charges fixed prices.

اتفاصل *ʔitfaaṣil* /vi/ **1** to bargain with one another. **2** (impersonal) passive of *faaṣil*[2] 1. *ʔir-ragil-da ma-yitfaṣil-ʃ*[i] *mɛaa* this man cannot be bargained with. - ava/iva *mitfaaṣil*.

ف ص ل ى

فاصوليا *faṣulya* <perh T *fasulya* from Gr> /coll n/ haricot bean(s). *faṣulya beeḍa* dried beans. *faṣulya xaḍra* green beans, French beans.

ف ص م

انفصام *ʔinfiṣaam*↑ /n/ splitting. *ʔinfiṣaam faxṣiyya [path]* schizophrenia.

ف ض ح

فضح *faḍaḥ (a, i)* /vt/ to subject to scandal, disgrace. *ma-tiddi-luu-ʃ ɋirf*[i] *f-ʔaaxir il-ɛarḍ*[i] *yifḍaḥ-ak* if you don't give him a piastre at the end of the show, he'll make you a public spectacle. ‖ *ʔallaah yifḍiḥ-ak* ≈ God damn you! - *ʔallaah la yifḍiḥ-lak wiliyya [beggars]* ≈ may God protect the reputation of your womenfolk! - vn *faḍḥ*; ava *faaḍiḥ*; pva *mafḍuuḥ*.

فضحة *faḍḥa* /inst n/ a scandal, a public disgrace.

فاضح *faaḍiḥ* /adj/ scandalous, indecent. *fiɛl*[i] *faaḍiḥ [leg]* indecent act (e.g., indecent exposure, streaking etc.).

مفضوح *mafḍuuḥ* /n * and pl *mafaḍiiḥ*/ moral reprobate. ‖*ʃuuf il-mafḍuuḥa bint il-mafaḍiiḥ* ≈ just look at the shameless slut!

فضحي *fuḍaḥi* /adj * and pl *-yya*/ scandal-mongering, mud-slinging.

أفضح *ʔafḍaḥ* /el/ more/most disgraceful, scandalous etc.

فضيحة *fiḍiiḥa* /n pl *faḍaayiḥ*/ scandal, public disgrace. *ma-rḍit-ʃ*[i] *ʔatkallim ɛaʃaan m-aɛmil-ʃ*[i] *fḍiiḥa fiʃ-ʃaariɛ* I kept quiet, so as not to cause a scene in the street. *ya-di-l-fiḍiiḥa* how shocking! ‖*ya fḍiḥt-i [trad soc]* ≈ God forbid! (an expression of indignation or disbelief, used by women on hearing malicious gossip).

فضايحي *faḍayḥi* /adj * and pl *-yya*/ **1** scandalous. **2** scandal-mongering, mud-slinging.

اتفضح *ʔitfaḍaḥ* /vi/ to be subjected to scandal. - iva *mitfiḍiḥ*.

انفضح *ʔinfaḍaḥ* = *ʔitfaḍaḥ*. - iva *minfiḍiḥ*.

ف ض ض [1]

فضّ *faḍḍ (u)* /vt/ **1** to put an end to, have done with. *ga l-buliis faḍḍ il-xinaaɋa* the police came and broke up the fight. **2** to rid (o.s.). *fuḍḍ-i-na min di s-siira* let's drop the subject! *fuḍḍ-ak mik-kalaam* quit gabbing! ‖*fuḍḍ-ak baɋa* have done! enough! **3** to break (a seal). ‖*faḍḍ*[i] *bakarit-ha* he deflowered her. - vn *faḍaḍaan, faḍḍ*; ava *faaḍiḍ*; pva *mafḍuuḍ*.

انفضّ *ʔinfaḍḍ* /vi/ passive of *faḍḍ*. - iva *minfaḍḍ*.

اتفضّ *ʔitfaḍḍ* = *ʔinfaḍḍ*. - iva *mitfaḍḍ*.

ف ض ض [2]

فضّة *faḍḍa*[1] /n/ **1** silver. ‖*filuus faḍḍa* coins (in contrast with paper money). **2** *[obsol]* para, one fortieth of a piastre.

فضّي *faḍḍi* /adj/ **1** made of silver. *ɛumla faḍḍiyya* silver currency. **2** silver-coloured. *waraɋ faḍḍi* silver paper, tinfoil.

فضّاية *faḍḍaaya* /unit n, pl *-aat*/ of a piece of silver.

فضّيّة *faḍḍiyya* /coll n, pl *-aat*/ **1** silverware. **2** silver coins.

فضّض *faḍḍaḍ* /vt/ to silver. ‖*waraɋ mifaḍḍaḍ* silver foil, tinfoil. - vn *tafḍiiḍ*; ava/pva *mifaḍḍaḍ*.

اتفضّض *ʔitfaḍḍaḍ* /vi/ to be silvered. - iva *mitfaḍḍaḍ*.

ف ض ف ض

فضفض *faḍfaḍ* /vt/ to unburden oneself of (feelings etc.). *ʔinfarad biyya ɛaʃaan yifaḍfaḍ-li lli f-ɋalb-u kull-u* he took me off alone to pour out to me all that was in his heart. *ʔinta ɛaawiz waaḥid mumkin tifaḍfaḍ-lu* you need someone you can open your heart to. - vn *faḍfaḍa*; ava *mifaḍfaḍ*.

اتفضفض *ʔitfaḍfaḍ* /vi/ passive of *faḍfaḍ*. - iva *mitfaḍfaḍ*.

ف ض ل

فضل *fiḍil (a)* /vi/ **1** to remain, be left. *ʈilɛu l-ʔingiliiz fiḍlit ɛarabiyyat-hum* the English left; their cars remained. *faḍil-lina nuṣṣ*[i] *saaɛa* we still have half an hour to go. ‖*fiḍilt*[i] *waraa* I kept on after him. **2** /preverb/ to continue, go on (doing something). *fiḍil yibuṣṣ*[i] *f-saɛt-u* he kept looking at his watch. - vn *faḍalaan*; ava *faaḍil*.

فاضل *faaḍil* /adj, fem *faaḍila*, pl *ʔafaaḍil*/ ≈ distinguished, honourable (a formal epithet accompanying, especially in writing, certain titles). *ḥaḍaraat il-ʔafaaḍil* ≈ distinguished guests! *ʔil-ʔustaaza l-faaḍila naẓrit il-madrasa* ≈ the very honourable headmistress of the school.

فضل *faḍl* /n pl *ʔafḍaal*/ grace, goodness, favour, benefit. *faḍl-ak ɛalayya kbiir* you've been very generous to me. *bi-faḍl illaah* by the grace of God. *miin yinkir faḍl it-taɛliim* who can deny the benefit of education? ‖ *bi-faḍl* thanks to, as in *kull[i] da b-faḍl il-ɛarabiyya* it's all thanks to the car. - *ʔil-faḍl[i] liyya* it is (or was) thanks to me, I deserved the credit. - *min faḍl-ak* please! - *yiduum faḍl-ak* may your bounty last! (conventional reply to *ʔitfaḍḍal* q.v.).

¶ *faḍlan ɛan*↑ /prep/ besides, in addition to. *bi-yiqbaḍ mukafʔa ʃahriyya faḍlan ɛan murattab-u* he takes a monthly bonus in addition to his salary.

فضلة *faḍla* /n pl *fiḍal, fuḍal, fawaaḍil*/ left-over, remnant. *fiḍal qumaaʃ* remnants of material. ‖ *(min) faḍlit xeer-ak*↓ conventional formula employed when food is mentioned, as in *xadt[i] maɛaaya baqa faḍlit xeer-ak laḥma w-burtuqaan wi-mooz* ≈ so I took along with me - all from the bounty of your goodness - meat and oranges and bananas.

فضلات *faḍalaat* /pl n/ 1 left-overs, remnants. ‖ *ʔusbuuɛ il-faḍalaat* annual week-long sale of left-over pieces of cloth 2 *[euphem]* excreta, discharges.

أفضل *ʔafḍal* /el/ better/best, preferable.

فضول *fuḍuul* /n/ nosiness, officiousness.

فضولى *fuḍuuli* /adj * and pl *-yya*/ nosey, meddlesome, officious.

فضوليّة *fuḍuliyya* /n/ nosiness, officiousness.

فضيل *faḍiil* /n pl *fuḍala*/ man of sterling character. ‖ *ʔil-faḍla lil-faḍiil* (the rest goes to the best) an expression of consolation to someone who is not getting his fair share in a deal.

فضيلة *faḍiila* /n pl *faḍaayil*/ 1 virtue, merit. *ma-ḥadd[i]-ʃ yinkir ʔinn il-karam faḍiila* no one will deny that generosity is a virtue. 2 formal title of, and form of polite reference to, an Azhar scholar. *faḍiilit iʃ-ʃeex* ≈ His Eminence the Sheikh. *ṣaaḥib il-faḍiila* ≈ His Eminence.

مفضال *mifḍaal* /adj, no pl/ *[usu iron]* = *faaḍil*.

فضّل *faḍḍal* /vt/ 1 to prefer, favour. *ʔana ʔafaḍḍal il-qism il-ʔadabi* I prefer the Arts Department. *faḍḍal-ak ɛalayya* he preferred you to me. *ʔil-ʔadab faḍḍaluu ɛala l-ɛilm* (or *ɛan il-ɛilm*) *[prov]* ≈ better well-bred than well-read. *ʔil-ʔakl il-mufaḍḍal ɛandi* my favourite food. 2 to leave, leave behind. *ma-tfaḍḍal-ʃ[i] ḥaaga fis-sanduuq* don't leave anything in the box. - vn *tafḍiil*; ava/pva *mifaḍḍal, mufaḍḍal*.

اتفضّل *ʔitfaḍḍal* /vi/ 1 to be preferred. *ʔin-nooɛ il-qadiim lissa mitfaḍḍal ɛan ig-gidiid* the old type is still preferred to the new. 2 to remain, be left over. *biɛna lli tfaḍḍal* we sold what was left. 3 to render a kindness. *ʔitfaḍḍal ɛaleena b-xibrit-ak* be so kind as to give us the benefit of your experience. *ʔitfaḍḍalu ɛalayya b-baaqi l-ʔakl* they were kind enough to give me the rest of the food. *ma-titfaḍḍal ɛaleena b-ziyaara* do honour us with a visit! *miʃ sid-na ʃ-ʃeex yitfaḍḍal maɛaaya nuqɛud fil-qahwa* would not the reverend Sheikh be so good as to sit with me in the café? - ava/iva *mitfaḍḍal*.

¶ *ʔitfaḍḍal* /fem *ʔitfaḍḍali*, pl *ʔitfaḍḍalu*/ formula of invitation. *ʔitfaḍḍal maɛaaya* please come with me. *ʔitfaḍḍal uqɛud* please sit down. *ʔitfaḍḍali ya sitt-i* please (come in), ma'am!

ف ض ى

فضى *fiḍi (a)* /vi/ 1 to become empty. *ʔiʃ-ʃaqqa fiḍyit* the flat fell vacant. *laazim tistanna lamma ḍ-daraga tifḍa* you must wait till the position becomes vacant. ‖ *ʔil-baṭṭariyya fiḍyit* the battery has gone dead. - *saɛt-i fiḍyit* my watch has run down. 2 to become unoccupied, become at leisure. *baɛḍ[i] m-afḍa miʃ-fuṛl* when I'm no longer busy with work. *faaḍi ya ʔusṭa* are you free, driver? *ʔil-faaḍi yiɛmil qaaḍi [prov]* ≈ the idler sets himself up as a judge (over other people's affairs). - vn *faḍayaan, faḍa, fuḍiyy*; ava *faaḍi*.

فضاء، فضا *faḍa* /n/ 1 empty space. *ʔarḍ[i] faḍa* vacant land. 2 interplanetary space. *safiinit faḍa* space-ship. 3 leisure time. *saɛaat faḍaa-hum* their spare time.

فضّى *fuḍiyy* /n/ (state of) emptiness. *fuḍiyy iʃ-ʃawariɛ xawwif-na* the emptiness of the streets scared us.

فاضى *faaḍi* /adj */ empty. ‖ *rigiɛna faḍyiin* we returned empty-handed. - *kalaam faaḍi* empty senseless talk. - *ɛal-faaḍi* (1) to no purpose, as in *ʔitkallim ɛal-faaḍi* he talked to no avail, *ga ɛal-faaḍi* he came in vain, *ʔil-ʔizaaɛa xilṣit wir-radyu maftuuḥ ɛal-faaḍi* the transmission has finished and the radio is on to no purpose. (2) (also *ɛal-faaḍi w-ɛal-malyaan*) for no reason, as in *bi-yitkallim ɛal-faaḍi w-ɛal-malyaan* he'll talk whether he has anything to say or not, *bi-yiḍḥak ɛal-faaḍi w-ɛal-malyaan* he laughs for no reason.

أفضى *ʔafḍa* /el/ more/most empty.

فضّى *faḍḍa*[2] /vt/ 1 to empty. *faḍḍeet l-ḥooḍ mil-mayya* I emptied the basin of water. 2 to free, set at leisure. *faḍḍi nafs-ak fiwayya* make yourself free for a while. — /vi/ 3 to empty, become empty. ‖ *ʔil-baṭṭariyya faḍḍit* the battery has gone dead. - *ʔis-saaɛa faḍḍit* the watch has run down. - vn *tafḍiyya*; ava/pva *mifaḍḍi*.

اتفضّى *ʔitfaḍḍa* /vi/ 1 to be emptied. 2 to be set at leisure. - iva *mitfaḍḍi*.

استفضى *ʔistafḍa* /vt/ 1 to consider free or unoccupied. *lamma ʔastafḍa nafs-i ḥ-azuur-ak* as soon as I can see my way out of things I'll visit you. 2 to select for empti-

ness. *ʔistafḍa ɋzaaza w-hat-ha* find an empty bottle and bring it here. - ava *mistafḍi*.

ف ط ر [1]

فطر *fiṭir (a)* /vi/ **1** to break a fast. *fiṭirt[i] yomeen fi-ramaḍaan* I broke the fast for two days during Ramadan. *ʔinta ṣaayim walla faaṭir* are you fasting or not? *ṣaam wi-fiṭir ɛala baṣala* he observed the fast and broke it with but an onion (a comment on illogical behaviour, or an expression of sympathy at a disappointing outcome). **2** to eat breakfast. *ʔil-baaʃa bi-yḥibb[i] yiʃrab ʃaay ɋabl[i] ma yiftar* the Pasha likes to drink tea before he has breakfast. *fiṭirna b-gibna* we had cheese for breakfast. *ʔiftar-bu ɋabl[i] ma yitɤadda biik [prov]* (have him for breakfast before he has you for lunch) get in your blow before he gets in his. - vn *fuṭuur, fiṭaar*; ava *faaṭir, faṭraan*.

فطور *fuṭuur* /n/ **1** breakfast. **2** meal, eaten at sunset, with which the daily Ramadan fast is broken.

فطار *fiṭaar = fuṭuur*.

فطارى *fiṭaari* /adj invar/ *[Chr]* containing animal products and therefore not permitted during a fast (of food).

فطر *fiṭr* /n/ fast breaking. *ɛiid il-fiṭr* the Feast of the Breaking of the (Ramadan) Fast, Lesser Bairam.

فطرة *fuṭra↓* /n/ nuts, candy and sweets (especially those eaten at the feast celebrating the end of Ramadan).

فطير *fiṭiir* /coll n/ rounds or squares of many-layered pastry (the plainer sort may be broken in pieces and dipped into cheese, honey, cream etc., while the finer sort are made of flaky pastry with a sweet or savoury topping or filling). ‖*fiṭiir laff* rich pastry made with cream, eaten with cheese or honey. - *fiṭiir maɋli* type of round pastry cooked by frying. - *fiṭiir ir-raḥma* type of pastry distributed to the poor by those visiting the tombs of their dead relatives. - *fiṭiir miʃaltit* large rounds of rich multi-layered pastry, specifically those baked in mud ovens (considered a delicacy).

فطيرة *fiṭiira* /unit n, pl *-aat, faṭaayir*/ a round or square of *fiṭiir*.

فطاطرى *faṭaṭri* /n pl *-yya*/ professional *fiṭiir* cook, maker and seller of *fiṭiir*.

فطّر *faṭṭar* **1** /vi/ to constitute fast-breaking. *ʔil-ḥuɋan bi-tfaṭṭar fi-ramaḍaan* do injections break the Ramadan fast? **2** /vt/ to give breakfast to. *ʔil-lukanda bi-tfaṭṭar iz-zabaayin* the hotel provides breakfast for the customers. - vn *taftiir*; ava *mifaṭṭar*.

اتفطّر *ʔitfaṭṭar* /vi/ to be given breakfast. - iva *mitfaṭṭar*.

إفطار *ʔiftaar* /vn/ breaking of the (Ramadan) fast. *madfaɛ il-ʔiftaar* the cannon shot announcing the end of the daily fasting period during Ramadan.

ف ط ر [2]

فطر *faṭar (u)* /vt/ to distress. *ʔil-ḥuzn[i] faṭar ɋalb-i* sorrow broke my heart. - vn *faṭr, faṭaraan*; ava *faaṭir*; pva *maftuur*.

اتفطر *ʔitfaṭar* /vi/ to become heavy or distressed (of the heart). *ɋalb-i ɛala ʔibn-i tfaṭar wi-ɋalb ibn-i ɛalayya zayy il-ḥagar [prov]* (I was heart-broken over my son, but my son's heart was like stone to me) ≈ children are certain cares, but uncertain comforts. - ava *mitfiṭir*.

انفطر *ʔinfaṭar = ʔitfaṭar*. - ava *minfiṭir*.

ف ط س

فطس *fiṭis[1] (a)* /vi/ **1a** to suffocate, choke. *ʔana faṭsaan min il-ḥarr[i] da* I'm suffocating from this heat. **1b** to become fed up. *fiṭist[i] min il-ɛiiʃa di* I got choked off with that life. **2** *[deris]* to perish (of a person). *fiṭsit taḥt[a] ɛarabiyya* she got snuffed out in a car accident. ‖*fiṭis (ɛala rooḥ-u) mid-diḥk* he almost died laughing. **3** *[Isl]* to die (of animals) without being slaughtered according to the precepts governing ritual purity. *ṭallaɛ fii ʔil-ɋuṭaṭ il-faṭsa [prov]* (he claimed it had dead cats in it) he could find nothing but bad to say for it. - vn *faṭasaan*; ava *faaṭis, faṭsaan*.

فطس *faṭas (u)* /vt/ to depress, press down. *ʔil-lakma faṭasit manaxiir-u* the blow flattened his nose. - vn *faṭs*; ava *faaṭis*; pva *maftuus*.

فطس *fiṭis[2]* /adj */ gluttonous.

أفطس *ʔafṭas* /adj fem *faṭsa*, pl *fuṭs*/ flat, bashed-in. *manaxiir faṭsa* a boxer's nose.

فطيس *fiṭiis* /adj invar/ **1** *[Isl]* not slaughtered according to Islamic precepts and hence considered inedible. **2** suffocating, airless. *ʔid-dinya fṭiis* the weather is stifling. — /adv/ **3** in vain, for nothing. *raaḥ fiṭiis* it ended up a waste, as in *taɛab-i raaḥ fiṭiis* my efforts were in vain, *ʔil-ɛarabiyya raaḥit fiṭiis* the car was a total write-off. *maat fiṭiis* (1) he died for nothing. (2) he died in total obscurity.

انفطس *ʔitfaṭas* /vi/ **1** to be depressed, be pressed down. **2** to cave in. - ava/iva *mitfiṭis*.

انفطس *ʔinfaṭas = ʔitfaṭas*. - ava/iva *minfiṭis*.

فطّس *faṭṭas* /vt/ **1** to choke, suffocate. **2** *[slang]* to kill, snuff out, bump off. - vn *taftiis*; ava *mifaṭṭas*.

اتفطّس *ʔitfaṭṭas* /vi/ passive of *faṭṭas*. - iva *mitfaṭṭas*.

ف ط ط

فطّ *faṭṭ (u)* /vi/ to spring, bound. *ʔiḍ-ḍufdaɛ raaḥ faaṭiṭ* the frog hopped away. *kaan bi-yilɛab bi-ʔastik raaḥ*

faaṭiṭ fi-wiff-u he was playing with a rubber band and it shot into his face. - vn *faṭṭ, faṭaṭaan*; ava *faaṭiṭ*.
فطّة *faṭṭa* /inst n, pl *-aat*/ a jump, a leap.
فطّط *faṭṭaṭ* /vt/ to cause to jump. - vn *taftiiṭ*; ava/pva *mifaṭṭaṭ*.
اتفطّط *ʔitfaṭṭaṭ* /vi/ **1** to jump up and down. **2** to be made to jump. - ava/iva *mitfaṭṭaṭ*.

ف ط ر ى see ف ط ر [1]: *faṭaṭri, faṭaṭriyya*

ف ط ف ط
فطفط *faṭfaṭ* /vi/ to jump up and down, jump about. - vn *faṭfaṭa*; ava *mifaṭfaṭ*.

ف ط م
فطم *faṭam (u)* /vt/ to wean. *faṭamit-u ɛala sana* she weaned him at a year. ‖*faṭam ir-rayy[a] ɛan* to cease irrigating (a crop). - vn *fiṭaam, faṭm, faṭamaan*; ava *faaṭim*; pva *maftuum*.
فطمة *faṭma[1]* /pl *-aat*/ instance noun of *faṭm*.
فاطمة *faaṭima*↑, *faṭma[2]* /prop n/ (the Prophet's daughter) Fatima. *sitt-i-na faṭma, ʔis-sayyida faaṭima*, or *faṭma z-zahraaʔ* the Lady Fatima. - also *faṭna*.
فاطمي *faaṭimi*↑, *faṭmi* **1** /adj */ Fatimid. *ʔid-dawla l-faaṭimiyya* (or *l-faṭmiyya*) the Fatimid dynasty. **2** /n */ a Fatimid.
اتفطم *ʔitfaṭam* /vi/ to be weaned. - iva *mitfiṭim*.
انفطم *ʔinfaṭam* = *ʔitfaṭam*. - iva *minfiṭim*.

ف ط ن [1]
فطن *fiṭin[1] (a)* /vi/ to be (astutely) aware. *law fiṭint[i] lil-mawḍuuɛ mil-ʔawwil kunt[i] manaɛt-u* if I'd been aware of the matter from the beginning, I would have put a stop to it. - vn *faṭaana*.
فطن *fiṭin[2]* /adj * and pl *fuṭana*/ astute.
فطانة *faṭaana* /n/ astuteness.
فطين *faṭiin* /adj pl *fuṭana*/ astute.
اتفطّن *ʔitfaṭṭan* = *fiṭin[1]*. *kunt[i] mitfaṭṭan li-kull[i] muʔamrat-hum il-xabiisa* I was fully aware of all their evil schemes. - vn *tafaṭṭun*↑; ava *mitfaṭṭan*.

ف ط ن [2]
فاطمة *faṭna* /prop n/ variant of the name of (the Prophet's daughter) Fatima. - see ف ط م

ف ظ ظ
فظّ *faẓẓ* /adj pl *fuẓẓaaẓ, fuẓaẓa*/ insolent, loutish, rude.
فظاظة *faẓaaẓa* /n/ insolence.

ف ظ ع
فظاعة *faẓaaɛa* /n/ **1** hideousness, repulsiveness, heinousness. **2** /pl *-aat*/ atrocity.
فظيع *faẓiiɛ* /adj pl *fuẓaaɛ*/ **1** abominable, hideous, terrible. **2** prodigious, tremendous, terrific.
أفظع *ʔafẓaɛ* /el/ **1** more/most abominable, hideous or terrible. **2** more/most prodigious, tremendous or terrific.
استفظع *ʔistafẓaɛ* /vt/ to consider abominable, hideous or atrocious. - vn *ʔistifẓaaɛ*; ava *mistafẓaɛ*.

ف ع ص
فعص *faɛaṣ (a)* /vt/ to squash, crush. *ʔil-ɛarabiyya faɛaṣit il-waad* the car crushed the boy. - vn *faɛṣ, faɛaṣaan*; ava *faaɛiṣ*; pva *mafɛuuṣ*.
مفعوص *mafɛuuṣ* /adj pl *mafaɛiiṣ*/ runty, undersized. *ʔinta lissa ɛayyil mafɛuuṣ* you're still just a little pipsqueak. *ʔir-raagil il-mafɛuuṣ da* that little runt of a man. *ʔaxuu l-mafɛuuṣ da* that worthless squirt of a brother of his.
انفعص *ʔitfaɛaṣ* /vi/ to be squashed, be crushed. - iva *mitfiɛiṣ*.
فعّص *faɛɛaṣ* **1** /vt/ to crush (totally or successively). *ɛuuṭa mfaɛɛaṣa* squashy tomatoes. **2** /vi/ to poke around. *balaaʃ tifaɛɛaṣ fil-ʔakl* stop poking around in the food. *ma tuɛɛud-ʃ[i] tfaɛɛaṣ fi-ɛeen-ak* don't keep rubbing your eyes. - vn *tafɛiiṣ*; ava/pva *mifaɛɛaṣ*.
اتفعّص *ʔitfaɛɛaṣ* /vi/ to be crushed (totally or successively). - iva *mitfaɛɛaṣ*.

ف ع ك ش
فعكش *faɛkiʃ* /vt/ to put into disorder, disarrange. ‖*kidb[i] msaawi wala sudq[i] mfaɛkiʃ [prov]* ≈ a smooth lie is more effective than an awkward truth. - also *faḥkiʃ*. - vn *faɛkaʃa*; ava/pva *mifaɛkiʃ*.
اتفعكش *ʔitfaɛkiʃ* /vi/ to become disordered, be thrown into disorder. - vn *tifaɛkiiʃ*; ava/iva *mitfaɛkiʃ*.

ف ع ل
فعل *faɛal (a)* **1** /vt/ to do, perform. *ma-yḥibb[i]-ʃ yifɛal il-xeer* he doesn't like to do good. **2** /vi/ to act. *lamma tquul laazim tifɛal* when you promise (something) you should act (on it). *ʔil-ʔism[i] l-ṭuuba wil-fiɛl[i] l-ʔamʃiir [prov]* (talk for (the cold month of) Tuba and action for (the stormy month of) Amshir) the action doesn't match the words. - vn *fiɛl, faɛalaan*; ava *faaɛil*; pva *mafɛuul*.
¶ *faɛal fi-* to fornicate with.
فعل *fiɛl* /n pl *ʔafɛaal, fiɛaal*/ **1** action. *ʔik-kalaam sahl[i] laakin il-fiɛl[i] ṣaɛb* to talk is easy, to act hard. ‖*radd[i] fiɛl*

reaction. -*bil-fiʕl* in fact, really, truly. **2** /pl *ʔafʕaal* only/ *[gram]* verb.

¶ *fiʕlan* /adv/ in fact, really, truly. *ʔir-rakk*^{i} *fiʕlan ʕarraagil* it does indeed all depend on the man. *ʔil-beet maskuun fiʕlan* the house really is haunted.

فعلى *fiʕli* /adj/ actual, real. *ʔit-taxtiit il-fiʕli* the actual planning.

فاعل *faaʕil* /n/ **1** /pl *faʕala*/ doer. *faʕalit xeer* charitable people. *haniyyaa-lak ya faaʕil il-xeer [beggars]* may it reward you well, you charitable one! **2** /pl also *fuʕala*/ (unskilled) labourer. **3** /pl *-iin*/ *[gram]* subject (of a verbal sentence). — *ʔil-faaʕil* /no pl/ **4** unskilled manual labour force. *tiqul-f*^{i} *b-tiftaxal fil-faaʕil* you're acting as if you had to do menial work!

فاعليّة *faaʕiliyya*↑ /n/ efficacy. *lu faaʕiliyya ʕaziima f-fifaaʔ il-ʔamraaq* it has great efficacy in curing diseases.

فواعلى *fawaʕli* **1** /n pl *-yya*/ (unskilled) construction worker. **2** /adj pl *-yya*/ *[deris]* hardworking, characterized by brawn rather than brain.

مفعول *mafʕuul* /n/ **1** effect. *ʔil-musakkin da lu mafʕuul gaamid* this sedative has a powerful effect. ‖*naafiz il-mafʕuul* effective. *-saari l-mafʕuul* valid. *-sariiʕ il-mafʕuul* quick-acting. **2** /pl *mafaʕiil*/ *[gram]* object.

اتفعل *ʔitfaʕal* /vi/ passive of *faʕal*. -iva *mitfiʕil, mitfaʕal*.

انفعل *ʔinfaʕal* /vi/ **1** to react in an emotional or excited fashion, become excited, become stirred up. *ʔinfaʕalt*^{i} *bil-ħikaaya di* I got worked up by this story. **2** = *ʔitfaʕal*. - vn *ʔinfiʕaal*; ava/iva *minfiʕil*.

انفعالى *ʔinfiʕaali* /adj/ melodramatic, emotional.

مفاعل *mufaaʕil* /n pl *-aat*/ reactor. *mufaaʕil zarri* nuclear reactor.

اتفاعل *ʔitfaaʕil*↑ /vi/ *[chem]* to react, interact. -vn *tafaaʕul*; ava *mutafaaʕil*.

تفاعل *tafaaʕul*↑ /n pl *-aat*/ *[chem]* reaction, interaction.

استفعل *ʔistafʕal*↓: *ʔistafʕal fi-*↓ to fornicate with. *ʕayzaa yistafʕal fiiha* she wants him to sleep with her. -ava *mistafʕal*.

ف ق د

فقد *faqad (i)* /vt/ **1** to cease to maintain, cease to keep, lose. *faqadt il-ħamaasa f-nuṣṣ is-sikka* I lost enthusiasm half-way through. *faqad is-sayṭara ʕala nafs-u* he lost control of himself. *faqad il-waʕy* he lost consciousness. -/the literary passive occurs/ *saʕt-i fuqdit minni* I lost my watch. **2** to bring about the downfall of. *ʔiṭ-ṭamaʕ huwwa lli faqad il-ħaraami* it was greed which ended the thief's career. *muzakrit-u maʕa ʔaṣħab-u faqadit-u* his studying with his friends led to his failure. — /vi/ **3** to retire from life's struggle, give up caring. *faqadt*^{a} *xalaaṣ ma-ʕad-f*^{i} *ħadd*^{i} *yhimm-i-ni* I've thrown in the towel - I don't care about anyone anymore. -vn *faqadaan*; ava *faaqid*; pva *mafquud*.

فاقد *faaqid* /adj/ **1** lost. ‖*badal faaqid* replacement for a lost official document (e.g., a passport, a driver's licence). **2** desperate.

مفقود *mafquud* /n */ missing person.

أفقد *ʔafqad* /el/ more/most desperate or ruthless. *ʔafqad walad fil-ħitta* the most ruthless character in the neighbourhood.

الفقيد *ʔil-faqiid, ʔil-faqiid* /n/ the late lamented.

اتفقد *ʔitfaqad* /vi/ passive of *faqad* 1 and 2. -iva *mitfiqid*.

انفقد *ʔinfaqad* = *ʔitfaqad*. -iva *minfiqid*.

اتفقّد *ʔitfaqqad* /vt/ to inspect, check up on. *bi-nitfaqqad ħaal iz-zarʕ* we inspect the crops. -ava *mitfaqqad*.

افتقد *ʔiftaqad* /vt/ *[Chr]* to visit and encourage (lapsed church members). *ħa-niṭlaʕ iftiqaad qabl il-ʕiid* we'll go out encouraging people to come to church (a few days) before the feast. -vn *ʔiftiqaad*.

ف ق ر [1]

فقر *fiqir* or *fuqur (a)* /vi/ to become poor. - vn *faqaraan, faqr*; ava *faqraan*.

فقر *faqar (i)* /vt/ to impoverish. *ʔis-suuq kal filuus-i w-faqar-ni* the market devoured my money and reduced me to poverty. - vn *faqr*; ava *faaqir*.

فقر *faqr* /n/ **1** poverty. **2** want, lack, shortage. ‖*faqr*^{i} *damm* anaemia.

فقران *faqraan* /adj */ poor, destitute.

فقرى *faqri* /adj */ bringing bad luck, unlucky. *yoom faqri* an unlucky day. *dool naas faqriyyiin - kull*^{i} *m-azur-hum ʔatniħis* those people have a curse on them; whenever I visit them I have bad luck.

فقير *faqiir* /adj pl *fuqara, faqaara*/ (miserably) poor. *ʔil-faqiir riħt-u wiħʃa [prov]* ≈ the reek of poverty drives people away. *xuduu-hum faqaara yixnii-ku llaah [prov]* marry into a poor family and God will make you wealthy.

أفقر *ʔafqar* /el/ more/most destitute. *ʔafqar min ganaaḥ id-dabbuur [prov]* (poorer than a wasp's wing) poorer than a church mouse.

فقايرى *faqayri* /adj inv/ poor, humble.

فقر *faqqar*^{i} /vt/ to reduce to abject poverty, make destitute. -vn *tafqiir*; ava *mifaqqar*.

¶ *faqqar ɛala* to jinx with constant ill-wishing.
افتقر ʔiftaqar /vi/ to become poor. *fallis wi-ftaqar* he went bankrupt and became poor. - ava *miftiqir*.

ف ق ر [2]
فقرة *faqraʰ* /n pl *faqaraat*/ **1** vertebra. **2** paragraph.
فقري *faqriʰ* /adj/ vertebral, vertebrate. *ʔil-ɛamuud il-faqri* the spinal column. *ḥayawanaat faqriyya* vertebrate animals.

ف ق ر [3]
فقّر *faqqar*[2] /vi/ **1** to sway rhythmically (as at a *zikr* or *zaar*). **2** to nod, rock (e.g., from drowsiness or pain). ‖ *ʔiʃ-ʃamɛa bi-tfaqqar* the candle is flickering. - vn *tafqiir*; ava *mifaqqar*.

ف ق س [1]
فقس *faqas (i)* **1** /vi/ to hatch, hatch out. *beeḍa faqsa* a hatched egg. *kull*[i] *laṭɛa laazim titnaqqa qabl*[i] *ma tifqis* each egg-cluster must be picked off before it hatches. **2** /vt/ to catch out (s.o.) in trickery, catch out (a trick). *kaan bi-yisraḥ biyya bass*[a] *ʔana faqast-u* he was trying to fool me but I caught him out. *faqasu l-malɛuub* they uncovered the trick. - vn *faqs, faqasaan*; ava *faaqis*; pva *maqfuus*.
فقس *faqs* /n/ hatch, brood. *baṭṭa w-faqs-a-ha* a duck and her newly-hatched brood.
فقسة *faqsa* /inst n, pl *-aat*/ a hatching out.
اتفقس *ʔitfaqas* /vi/ to be caught out. - iva *mitfiqis, mitfaqas*.
انفقس *ʔinfaqas* = *ʔitfaqas*. - iva *minfiqis*.
فقّس *faqqas* **1** /vt/ to cause to hatch. *ʔil-ḥaraara faqqasit il-beeḍ badri* heat caused the eggs to hatch early. **2** /vi/ to hatch successively at short intervals (of eggs). - vn *tafqiis*; ava/pva *mifaqqas*.
اتفقّس *ʔitfaqqas* /vi/ passive of *faqqas* 1. - iva *mitfaqqas*.

ف ق س [2] see ف ق و س : *faqquus, faqquusa*

ف ق ش
فقش *faqaʃ (i)* /vt/ to break, crack. *faqaʃt il-beeḍa* I broke the egg. - vn *faqʃ, faqaʃaan*; ava *faaqiʃ*; pva *mafquuf*.
اتفقش *ʔitfaqaʃ* /vi/ to be broken, be cracked. - iva *mitfiqiʃ, mitfaqaʃ*.
انفقش *ʔinfaqaʃ* = *ʔitfaqaʃ*. - iva *minfiqiʃ*.
فقّش *faqqaʃ* /vt/ to smash (s.th.) or break (several things) in succession. - vn *tafqiiʃ*; ava/pva *mifaqqaʃ*.
اتفقّش *ʔitfaqqaʃ* /vi/ to be smashed (repeatedly or of several things). - iva *mitfaqqaʃ*.

ف ق ط
فقط *faqaṭ, faqaṭ* /adv/ only (so much and no more), altogether (after a sum of money). *ʔil-ʔooḍa di lil-mudarrisiin faqaṭ* this room is for teachers only.
فقّط *faqqaṭ* /vt/ to write out (the figures expressing a sum of money) in words. - vn *tafqiiṭ*; ava/pva *mifaqqaṭ*.
تفقيطة *tafqiiṭa* /pl *-aat*/ instance noun of *tafqiiṭ*.
اتفقّط *ʔitfaqqaṭ* /vi/ to be written out in words (of the figures expressing a sum of money). - iva *mitfaqqaṭ*.

ف ق ع
فقع *faqaɛ (a)* /vt/ **1** to burst. *balloona mafquuɛa* a burst balloon. *ḍaṛaṭ bi-ṣawabɛ-u ɛad-dimmil faqaɛ-u* he pressed the boil with his fingers and made it burst open. ‖ *faqaɛ giiṣ* he ripped off a loud fart. - *faqaɛ diḥka* he burst out with a laugh. - *faqaɛ-u ɛalam* he gave him a resounding slap. - *bi-yifqaɛ il-maraara* it's infuriating. - *bi-yifqaɛ il-beḍaan [coarse]* it's a real balls-ache. **2** to infuriate, incense. — /vi/ **3** to burst out. *faqaɛit biṣ-ṣoot* she burst out screaming. - vn *faqaɛaan, faqɛ*; ava *faaqiɛ*; pva *mafquuɛ*.
فاقع *faaqiɛ* /adj/ bright, vivid, loud (of colours).
أفقع *ʔafqaɛ* /el/ **1** more/most vivid (of colours). **2** more/most extreme.
اتفقع *ʔitfaqaɛ* /vi/ **1** to burst, be burst. **2** to be or become infuriated, be or become incensed. - ava/iva *mitfiqiɛ*.
انفقع *ʔinfaqaɛ* = *ʔitfaqaɛ*. - ava/iva *minfiqiɛ*.
فقّع *faqqaɛ* /vt/ **1** to burst repeatedly or successively. **2** to bake (bread) twice over. — /vi/ **3** to become lean or thin. *gism-a-ha faqqaɛ mil-ɛaya* she lost weight because of the illness. - vn *tafqiiɛ*; ava/pva *mifaqqaɛ*.
اتفقّع *ʔitfaqqaɛ* /vi/ passive of *faqqaɛ* 1 and 2. - iva *mitfaqqaɛ*.

ف ق ف ق
فقفق *faqfaq* /vi/ to blister. *ʔidee faqfaqit* his hands came out in blisters. - vn *faqfaqa*; ava *mifaqfaq*.
فقفوقة *faqfuuqa* /n pl *-aat, faqafiiq*/ blister.
فقفيقة *fuqfeeqa* = *faqfuuqa*.

ف ق ق و س
فاقوس *faqquus* /coll n/ half-grown honeydew melon(s). ‖ *ʔin-naas ɛandak xiyaar wi-faqquus* ≈ you differentiate unfairly between people.
فاقوسة *faqquusa* /pl *-aat*/ unit noun of *faqquus*.

ف ق ه
فقه *fiqhʰ* /n/ Islamic jurisprudence.
فقهي *fiqhiʰ* /adj/ pertaining to jurisprudence.

فقى *fiqi* /n pl *fuqaha/* **1** professional reciter or teacher of the Koran. **2** one who combines sanctimonious hypocrisy with low scavenging ways. see further under ف ق ه ن

ف ق ه ن see also ف ق ه

فقهنة *faqhana* /n/ sanctimoniousness combined with low scavenging ways.

اتفقهن *ʔitfaqhan* /vi/ to behave in a sanctimonious yet base and greedy way. - ava *mitfaqhan*.

ف ق ى see ف ق ه : *fiqi*

ف ك ر

فكر *fikr* /n/ **1** thought, thinking. *bi-yidris fikr*^{i} *syaasi* he studies political thought. *fikr-ak ʔeeh* what is your opinion? *fikr-ak yibiɛ-li bit-tasɛiira* do you imagine he'd sell to me at the fixed price? **2** care, worry. *ɛandu fikr* he has something on his mind. *balaaʃ il-fikr* stop worrying!

فكرة *fikra* /n pl *ʔafkaar/* thought, idea, conception. *ma-ɛandii-ʃ fikra xaaliṣ* I haven't the slightest idea. *fikra gdiida fiṭ-ṭibaaɛa* a new idea in printing. *ɛawziin naaxud fikra ɛan if-fuvl* we'd like to get some idea of the work. ‖*ɛala fikra* by the way, incidentally.

فاكر *faakir* /ava/ **1** thinking. *kunt*^{i} *faakir ʔinnak miʃ ḥa-tiigi* I thought you weren't coming. **2** remembering. *miʃ laazim tifakkar-ni - ʔana faakir kull*^{a} *ḥaaga* you don't have to remind me, I remember everything. *ma-ḥadd*^{i}*-ʃ fiiku fakir-ni* does none of you remember me?

فكّر *fakkar* **1** /vt/ **1a** to address (s.o.) with intent to remind. *fakkar-ni ʔakallim-u bukra* remind me to speak to him tomorrow. **1b** to call or bring to (s.o.)'s mind. *bi-yfakkar-ni b-ʔaxuu-ya* he reminds me of my brother. *ʔil-ʔuxniyya fakkarit-ni b-ʔayyaam ʃabaab-i* the song brought back to me memories of my youth. **2** /vi/ to ponder, give thought. *xallii-ni ʔafakkar fiiha ʃwayya* let me give it some thought. *bi-yfakkar fiiha ɛala ṭuul* he thinks about her all the time. *fakkart abaṭṭal is-sagaayir* I thought of stopping smoking. ‖*ʔil-ɛabd*^{i} *fit-tafkiir wir-rabb*^{i} *fit-tadbiir [prov]* ≈ man proposes, God disposes. - vn *tafkiir*; ava/pva *mifakkar*.

مفكّرة *mufakkira* /n pl *-aat/* diary, memo book, notebook.

اتفكّر *ʔitfakkar* /vi/ **1** to be reminded. **2** to ponder, give thought. *titfakkar titɛakkar [prov]* the more one thinks (about one's affairs), the more one gets depressed. - iva/ava *mitfakkar*.

افتكر *ʔiftakar* /vt/ **1** to think of as, take as. *ʔiftakart-ak if-feex ɛali* I took you for Sheikh Ali. *tiftikir it-taɛyiin sahl* do you suppose it's easy to get appointed? **2** to recall, remember. *ɛala m-aftikir ma-ʃuft-uu-ʃ qabl*^{i} *kida* as far as I remember I never saw him before. *ma-qdirt*^{i}*-ʃ ʔaftikir ism-u* I couldn't remember his name. **3** to think of. *baqeet ʔaftikir kalaam in-naas ɛan miraat-i* I started to think of what people had said about my wife. ‖*ʔiftikir ḥaaga ḥilwa* (or *ɛidla*) change the subject to something nicer! - *kunt iftikir ḥaaga ʔaḥsan* (you should have mentioned something better!) ≈ talk of the devil! (when an unwelcome subject of conversation appears). - *rabb-i-na ftakar-u* he died. - *ʔiftikaar-u raḥma* the fact that God thinks (of us) is a (sign of) divine mercy (said as a consolation at times of anguish and distress). - vn *ʔiftikaar*; ava *miftikir*.

ف ك ك

فكّ *fakk*^{I} *(u, i)* /vt/ **1a** to undo, release, free. *fakkit iz-zaraayiir* she undid the buttons. *fakk*^{i} *hduum-u* he loosened his clothes. *fakkeet iṣ-ṣamuula* I unscrewed the nut. *b-afukk is-sagaayir w-abiɛ-hum farṭ* I unpackage the cigarettes and sell them one by one. ‖*fakk*^{i} *gild* to soften leather. - *fakk*^{i} *wiʃʃ-u* he stopped frowning, he cheered up. - *fukk-a-ha* cheer up! - *ʔahu kalaam fakk*^{i} *magaalis* it's just small talk, it's just said to make conversation. **1b** to make null, invalidate. *huwwa ḥa-yfukk-i-lak is-siḥr* he will undo the spell for you. *fakk*^{i} *wuḍuww-u* he invalidated his ablution (e.g., by going to the lavatory). **2a** to take apart, dismantle. *fakkeena l-mutoor* we dismantled the engine. *fakk*^{i} *il-ɛuqda* he untied the knot. *ḥabl*^{i} *mafkuuk* unravelled rope. ‖*rabb-i-na yfukk*^{i} *ɛuqdit-ha* may God find her a husband. - *rabb-i-na yfukk*^{a} *ɛaqit-ha* may God grant her a child. - *yiɛraf yifukk il-xaṭṭ* he just about knows how to read. - *fakk iz-zimaam [admin]* demarcation of land boundaries. **2b** to change (money) into smaller units. *tifukk-i-li gneeh* could you change a pound for me? ‖*ʔafukk-u feen* ≈ a fat lot of good that does me, as in *ʔana ʔaasif giddan*. - *ʔafukk-a-ha feen ʔana ʔaasif di* 'I'm very sorry.' 'What bloody use is your being sorry to me?' **2c** *[agric]* to plough (land), break up (soil) for the first time after a previous crop has been cleared, or after irrigation. **3** to solve, relieve (pressure, tension). *fakk*^{i} *zanqit-i* he got me out of a tight spot. *ḥa-nfukk il-muʃkila di ʔizzaay* how can we resolve this problem? ‖*fakk*^{a} *ḥaṣr-i* to urinate, have a pee. - *xud il-filuus wi-fukk*^{i} *nafs-ak* take the money and relieve yourself of your worries. — /vi/ **4** to come apart, loosen. *ʔil-faraamil fakkit* the brakes have become loose. **5a** to relax, let up (of pressure, tension), go down (of a swelling). *ʔil-waram lissa ma-fakk*^{i}*-ʃ ɛanni* the swelling still

hasn't left me. *ʕiṭ-ṭawaariʔ fakkit* the emergency blew over. *ʕiz-zamta fakkit* the hot spell (of weather) broke. *diqt-u fakkit* his troubles have come to an end. **5b** to relax, have one's mind relieved of worry. *xud il-ḥuqna w-fukk[a] ɛan nafs-ak* get the injection and stop worrying. **6** to make off, run off. *xad il-filuus wi-fakk* he took the money and ran. *fakkeet minnu* I escaped from him. - vn *fakakaan, fakk*; ava *faakik*; pva *mafkuuk*.

فكّ *fakk*[2] /n pl *fukuuk*/ jaw.

فكّة *fakka* /n pl *-aat*/ **1** small change, coins or notes of low denomination. *ma-maɛii-ʃ fakka ʕadfaɛ it-taks* I've no change with which to pay for the taxi. **2** change (given for a larger sum of money). *maɛaak fakkit xamsa gneeh* do you have change for five pounds?

فكوك *fukuuk* /n/ incense (thus named because of its use in breaking spells).

فكيك *fakiik: qaal ya fakiik* ≈ to take to one's heels. *nataʃt[i] minnu l-maḥfaẓa w-qult[i] ya fakiik* I snatched the wallet from him and made off.

مفكّ *mifakk* /n pl *-aat*/ screwdriver.

اتفكّ *ʕitfakk* /vi/ passive of *fakk*[1] 1, 2 and 3. ‖*mafaṣl-i tfakkit* (1) I went limp (from exhaustion). (2) my joints turned to water (from fright). - iva *mitfakk*.

انفكّ *ʕinfakk* = *ʕitfakk*. - iva *minfakk*.

فكّك *fakkik* /vt/ **1** to undo successively, release successively. **2** to dismantle, take apart piece by piece. **3a** to cause to be loose. *siwaqt-ak ḥa-tfakkik il-faraamil* your driving will loosen the brakes. **3b** *[agric]* to loosen (the soil with a plough). **4** to heat and so soften (stale bread). - vn *tafkiik*; ava/pva *mifakkik*.

اتفكّك *ʕitfakkik* /vi/ **1** passive of *fakkik*. **2** to come loose. - ava/iva *mitfakkik*.

ف ك ه [1]

فاكهة *fakha* /coll n, pl *fawaakih*/ fruit(s). ‖*malḥ[i] fawaakih* liver salts.

فكهاني *fakahaani* /n pl *-yya*/ fruiterer.

ف ك ه [2]

فكاهة *fukaaha* /n/ humour.

فكيه *fakiih* /adj * and pl *fukaha*/ merry, full of humour, funny.

أفكه *ʔafkah* /el/ **1** more/most funny, entertaining etc. (of persons). **2**↓ more/most attractive etc. (of things).

اتفكّه *ʕitfakkih* /vi/ to engage in light-hearted conversation, kid around. - vn *tafakkuh*; ava *mitfakkih*.

ف ل ا ر

فولار *fulaar* <Fr *foulard*> /n/ type of cheap unpatterned cotton cloth.

ف ل ا ش

فلاش *filaaf* <Engl> /n pl *-aat*/ **1** *[phot]* flash attachment. **2** torch, flashlight.

ف ل ا ن

فلان *fulaan*[1] <Fr *flan*> /n pl *-aat*/ *[print]* flong.

ف ل ت

فلت *filit* or *falat (i)* **1** /vi/ to slip away, slip loose. *ʕil-qalawooz itkasar fa-ṣ-ṣamuula filtit* the thread broke so the screw slipped out. *filit min ʕiid-i* he slipped from my grasp. *filitt[i] mis-sign* I escaped from prison. *ʕil-luṭaɛ illi filtit min in-naqaawa l-yadawiyya* the egg-clusters that were missed during hand-picking. *filit minhum iz-zimaam* they lost control. **2** /vt/ to let slip away. *ma-ṭiflituu-ʃ min ʕiid-ak* don't let it go. ‖*leeh lisaan-ak mafluut* why are you so insolent? *-ɛiyar-ha mafluut* she has no sense of proportion. - also *falaṭ*. - vn *falt, falataan*; ava *faalit*; pva *mafluut*.

فلتة *falta* /n pl *-aat*/ **1** instance noun of *falt*. ‖*faltit lisaan* a slip of the tongue. **2** prize specimen, one in a million.

مفلوت *mafluut* /adj */ loose, out of control. *mafluut il-lisaan* loose-tongued, foul-mouthed and rude.

فلاتي *falaati* /n pl *-yya*/ skirt-chaser, womanizer.

اتفلت *ʕitfalat* /vi/ **1** to work loose, slip (away). **2** passive of *falat* 2. - ava/iva *mitfilit*.

انفلت *ʕinfalat* = *ʕitfalat*. - ava/iva *minfilit*.

فلّت *fallit* /vt/ **1** to let go, let slip (away). *fallit kalaam* to make a slip of the tongue. — /vi/ **2** to slip away, make off. **3** to break wind. - vn *tafliit*; ava/pva *mifallit*.

تفليتة *tafliita* /inst n, pl *-aat, tafaliit*/ a slip. - /adverbially/ *xaragu mil-maktab tafaliit* they sneaked out of the office.

اتفلّت *ʕitfallit* /vi/ **1** to slip away one after the other. **2** to be let go, be let slip. - ava/iva *mitfallit*.

ف ل ت ت و

فلتّو *filittu* <It *filetto*> /n/ **1** *[butcher]* filet of meat. **2a** decorative edging, piping. **2b** fillet, decorated border or edge (e.g., around tiles or the face of an *ɛuud*).

ف ل ت ر

فلتر *filtar* <Engl> /n pl *falaatir*/ filter. *filtar zeet* oil filter.

ف ل ت ر –

فيلتريه *filtireeh* <Fr *fil tiré*> /n/ *[needlew]* drawn-thread work.

ف ل ج

فالج *faalig* /n/ *[path]* hemiplegia.

ف ل ح [1]

فلح *falaḥ, filiḥ (a)* **1** /vi/ to do well, succeed, prosper. *ma-falaḥ-ʃ[i] fil-madrasa* he didn't do well at school. *ma-fii-ʃ ḥaaga yiɛmil-ha w-yiflaḥ* he does not succeed in anything he does. *ʕit-tigaara falaḥit fi-ʕiid-u* the business flourished under his direction. *ɛumr il-xaayin ma-yiflaḥ* the treacherous never prosper. ‖*ya faaliḥ* wise guy! **2** /vt/ *[non-Cairene]* to deflower (especially with the finger). -vn *filaaḥ, falaḥaan*; ava *faaliḥ*; pva *mafluuḥa*.

ف ل ح [2]

فلح *filḥ* /adj invar/ boorish, uncouth, rough.

فليح *fileeḥ, filiiḥ:* ʕabu *fleeḥ* a yokel, a hick.

فلاح *fallaaḥ* /n */ **1** peasant, fellah. *ʕeeʃ ɛarraf il-fallaaḥ bi-ʕakl it-tiffaaḥ [prov]* (what does the peasant know of eating apples?) ≈ what can you expect a bumpkin to know of life's refinements? **2** *ʕil-fallaḥiin* /pl n/ the countryside. *ɛayʃiin fil-ʕallaḥiin wi-ma-ɛanduhum-ʃ[i] ʕayy[i] fikra ɛan il-bandar* they live in the country and don't know anything about city life.

فلاّحى *fallaaḥi* /adj invar/ pertaining to peasants. *libs[i] fallaaḥi* peasant dress. *daar fallaaḥi* village house built around a farmyard. ‖*gibna fallaaḥi* cheese made from skimmed milk. -*ɛeeʃ fallaaḥi* large thin round flat loaves of bread, usually eaten dry.

فلّح *fallaḥ* /vi/ to become a fellah. *saab il-madrasa w-fallaḥ min zamaan* he left school and began working as a fellah long ago. -vn *tafliiḥ*; ava *mifallaḥ*.

استفلح *ʕistaflaḥ* /vt/ **1** to regard as a hick. **2** to select for boorishness. *ya-bn-i di miʃ ɋimt-ak - tiruuḥ ʕaḥsan tistaflaḥ laha waaḥid zayyaha w-titgawwiz-u* my son, she's not for you; she had better find herself a husband as uncouth as she is. — /vi/ **3** to behave like a boor. -vn *ʕistiflaaḥ*; ava *mistaflaḥ*. see further under ف ل ح ن

ف ل ح س

فلحسة *falḥasa* /vn/ cocksureness, conceited know-it-all behaviour.

فلحوس *falḥuus* /adj/ smart-alecky, conceited.

اتفلحس *ʕitfalḥas* /vi/ to give oneself know-it-all airs, be smart-alecky. -ava *mitfalḥas*.

ف ل ح ن see also **ف ل ح [2]**

فلحنة *falḥana* /vn/ boorishness, boorish manners.

اتفلحن *ʕitfalḥan* /vi/ to display boorish manners. -vn *tifalḥiin*; ava *mifalḥin*.

ف ل ر see **ف ل ا ر**: *fulaar*

ف ل ر س –

فلوروسنت *fulurusint* <Engl>: *lamba flurusint* fluorescent light. -also *furusint*.

ف ل س [1]

فلسان *falsaan* /adj */ penniless, broke. ʕana *falsaan iʃ-ʃahr[i] da* I am broke this month.

فلس *falas* /n/ penury. *miʃ ɋaadir yaakul min il-falas illi huwwa fii* he's so broke he can't feed himself. ‖*ma-ɛanduu-ʃ riiḥit il-falas* he doesn't have a penny to his name, he has absolutely nothing.

¶ *bil-falas* /adv/ gratuitously. *ʕiṭ-ṭalaba b-yingaḥu l-ʕayyam-di bil-falas* these days, students pass exams without doing any work for them.

فلسانجى *falasangi* /n pl -yya/ *[joc]* bankrupt, penniless man.

أفلس ʕa*flas[1]* /el/ more/most penurious.

فلوس *filuus* /pl n/ money. *filuus waraɋ* banknotes. *filuus faḍḍa* coins. ‖*filuus miɛammida* large-denomination notes. - *ʕilli fluus-u ḥaraam yiɛraf baab il-maḥkama [prov]* (he whose money is tainted will know the door of the court-house) ≈ having to take your disputes to court is the surest way to financial ruin. - *ʕilli fluus-u f-geeb-u ma-ybaan ɛeeb-u [prov]* ≈ the shortcomings of a rich man are gold-plated.

فلّس *fallis* **1** /vt/ to reduce to penury, cause to go bankrupt. *liɛb il-kuṭiina fallis-ni* playing cards has left me broke. — /vi/ **2** to become broke, go bankrupt. **3** to reach the end of one's resources. ʕana *fallist[i] mil-wadda* I give up on that boy! -vn *tafliis*; ava/pva *mifallis*.

تفليسة *tafliisa* /n pl -*aat, tafaliis*/ declaration of bankruptcy.

مفلّس *mifallis* /n */ bankrupt, penniless person. *ʕil-mifallis yifattiʃ fid-dafaatir il-ɋadiima [prov]* (a bankrupt will search in old account books) ≈ a desperate man will clutch at any straw.

اتفلّس *ʕitfallis* /vi/ to be reduced to penury. -iva *mitfallis*.

أفلس ʕa*flas[2]↑* /vi/ to go bankrupt. ‖*siyaasit il-wifaaɋ ʕaflasit* the policy of détente has failed. -vn *ʕiflaas*; ava *muflis*.

إفلاس *ʕiflaas* /n/ bankruptcy.

ف ل س [2]

فلس *fils* /n pl *ʕiflaas*/ *[coarse]* anus, arsehole.

ف ل س س see **ف ل ف س**: *falsuus*

ف ل س ط –

فلسطين *filisṭiin* or *falasṭiin* /prop n/ Palestine.

فلسطيني *filisṭiini* or *falasṭiini* **1** /adj */ Palestinian. **2** /n */ a Palestinian.

ف ل س ع

فلسع *falsaɛ* /vi/ to skedaddle, hop it. *kull[i] yoom yiruuḥ iṣ-ṣuxl[i] yimḍi wi-yfalsaɛ* every day he goes to work, signs in and beats it. *ʔistalaf il-filuus wi-falsaɛ* he borrowed the money and was never seen again. - vn *falsaɛa*; ava *mifalsaɛ*.

ف ل س ف

فلسفة *falsafa* /n pl *-aat*/ philosophy. *ʔil-falsafa l-ʔislamiyya* Islamic philosophy.

فلسفى *falsafi* /adj/ philosophical.

فيلسوف *faylasuuf, filasuuf* (also *falyasuuf*) /n pl *falasfa*/ **1** philosopher. **2** egghead, intellectual.

اتفلسف *ʔitfalsif* /vi/ to split hairs, engage in casuistry. - ava *mitfalsif*.

ف ل س ن – see ف ل س [1] : *falasangi, falasangiyya*

ف ل ش see ف ل ا ش : *filaaf*

ف ل ش ش

فلش *filuff* <Engl> /n/ flush (in cards).

ف ل ص و

فالصو *falṣu* <It *falso*> /adj invar/ **1** false, counterfeit. *filuus falṣu* counterfeit money. **2** of poor quality, worthless. *raagil falṣu* a worthless man. *ʔiz-zaman illi-ḥna fii zaman falṣu* this is a lousy age that we are in.

ف ل ط [1]

فلط *falaṭ (u)* **1** /vi/ to slip away. *ʔil-ʔarnab falaṭ min ʔid-ha* the rabbit wriggled out of her hand. **2** /vt/ to allow to slip away. - also *falat*. - vn *falṭ, falaṭaan*; ava *faaliṭ*; pva *mafluuṭ*.

اتفلط *ʔitfalaṭ* /vi/ **1** to slip away, escape. **2** to be let slip. - ava/iva *mitfiliṭ*.

انفلط *ʔinfalaṭ* = *ʔitfalaṭ*. - ava/iva *minfiliṭ*.

فلّط *fallaṭ* **1** /vt/ to allow to slip away successively or repeatedly. **2** /vi/ to slip away one after the other. *fallaṭna mil-madrasa mil-ḥiṣṣa l-ʔuula* we slipped out of school right from the first period. - vn *tafliiṭ*; ava/pva *mifallaṭ*.

اتفلّط *ʔitfallaṭ* /vi/ **1** passive of *fallaṭ* 1. **2** to slip away, escape. - ava/iva *mitfallaṭ*.

ف ل ط [2] see ف ل ل و ط : *falluuṭ, falluuṭa*

ف ل ط ح

فلطح *falṭaḥ* /vt/ **1** to widen (by flattening) at one end. **2** to make concave. - vn *falṭaḥa*; ava *mifalṭaḥ*.

مفلطح *mifalṭaḥ* /adj/ **1** flat, shallow. *ʔaṭbaaq mifalṭaḥa* dinner plate. **2** concave. *ɛadasa mifalṭaḥa* a concave lens.

اتفلطح *ʔitfalṭaḥ* /vi/ **1** to flatten out at the edges. **2** passive of *falṭaḥ*. - vn *tifalṭiiḥ*; ava/iva *mitfalṭaḥ*.

ف ل ع

فلعة *falɛa* /n/ huff. *balaaf il-falɛa btaɛt-ak di* there's no need for you to be so huffy.

اتفلع *ʔitfalaɛ* /vi/ to get into a huff. *bi-nkallim-u tfalaɛ wi-sab-na* we started to talk to him, but he left us in a huff. - ava *mitfiliɛ*.

ف ل ع ص

فلعص *falɛaṣ* **1** /vt/ to make chubby. **2** /vi/ to become chubby. - vn *falɛaṣa*; ava/pva *mifalɛaṣ*.

مفلعص *mifalɛaṣ* /adj/ chubby, plump.

فلعوص *falɛuuṣ* /adj/ *[deris]* self-important, uppity.

اتفلعص *ʔitfalɛaṣ* /vi/ to behave haughtily or overbearingly. *bi-yitfalɛaṣ ɛan-naas ɛala ma-fii-ʃ* he looks down on people although he is really nobody. - vn *tifalɛiiṣ*; ava *mitfalɛaṣ*.

ف ل ف س

فلفسة *falfasa* /vn/ *[joc]* high-flown drivel.

فلفوس *falfuus* (also *falsuus*) /n pl *falafiis*/ *[joc]* clever dick, smart-aleck.

اتفلفس *ʔitfalfis* /vi/ *[joc]* to give oneself know-it-all airs. - vn *tifalfiis*; ava *mitfalfis*. cf ف ل س ف

ف ل ف ص

فلفص *falfaṣ* /vi/ to wriggle (out of bonds, out of a tight spot). *fiḍilt afalfaṣ li-ḥadd[i] ma fakkeet nafs-i mit-taktiifa* I kept wriggling until I worked myself free of the bonds. *misku fiyya ɛafaan il-ɣada bass[i] ɋdirt afalfaṣ miz-zanɋa di* they pressed me to stay for lunch but I managed to wriggle out of that tight spot. - vn *falfaṣa*; ava *mifalfaṣ*.

فلفوص *falfuuṣ* /n pl *falafiiṣ*/ a shifty individual, a slippery customer.

اتفلفص *ʔitfalfaṣ* = *falfaṣ*. - vn *tifalfiiṣ*; ava *mitfalfaṣ*.

ف ل ف ل

فلفل *filfil* /coll n/ pepper(s), peppercorn(s). *filfil ʔiswid* black pepper. *filfil ruumi* sweet peppers. *filfil baladi* chili peppers.

فلفلة *filfila* /unit n, pl *-aat*/ a pepper, a peppercorn. ‖*ya filfila ya kaydaa-hum* you saucy tease!
فلفلاية *filfilaaya = filfila.*
فلافل *falaafil* /pl n/ common dish consisting of dried broad beans soaked and pounded together with herbs and spices, shaped into balls and deep-fried in oil (more often called *ṭaʕmiyya*).
فلفل *falfil* /vt/ **1** to pepper, apply pepper to. **2** to cook (especially rice) plain. *ruzz*^{i} *mfalfil* plain boiled rice. — /vi/ **3** to become incensed, become agitated. *bi-tḥaawil tixallii-ni ʔafalfil mil-ṿiira* she's trying to make me burn with jealousy. - vn *falfala*; ava/pva *mifalfil.*
مفلفل *mifalfil* /adj/ kinky (of hair).
اتفلفل *ʔitfalfil* /vi/ **1** to be seasoned with pepper. **2** to be cooked plain (especially of rice). **3** to become incensed, become agitated. - vn *tifalfiil*; ava/iva *mitfalfil.*

ف ل ق
فلق *falaq (a)* /vt/ **1** to split, crack in two. *falaq dimaʔ-ha bil-balṭa* he split her head in two with the axe. **2** to annoy, irritate, incense. *di ḥaaga tiflaq* this is maddening! - vn *falq, falaqaan*; ava *faaliq*; pva *mafluuq.*
فلق *falq* /n pl *fuluuq*/ **1** split length of a (palm) trunk (used in rural building as a rafter, prop etc.). **2** crack. *falq*^{i} *fil-ḥeeṭa* a crack in the wall.
فلقة *falqa* /n pl *-aat*/ **1** /inst n/ **1a** a splitting, a crashing. **1b** an irritation, an annoyance. **2** /also pl *filaq*/ half (of s.th. split in two parts). ‖*falqit qamar* (a slice of moon) ≈ a beauty.
فالق *faaliq* /n pl *fawaaliq*/ fault (in the earth's crust).
فلقة *falaqa* /n/ pl *-aat*/ staff with a rope looped through its ends which, when twisted, secures the feet of one who is to be bastinadoed. - also *falaka.*
اتفلق *ʔitfalaq* /vi/ passive of *falaq.* ‖*ʔitfiliq* ≈ if you don't like it, lump it! - *xallii yitfiliq* he can go to hell! - iva *mitfiliq.*
انفلق *ʔinfalaq = ʔitfalaq.* - iva *minfiliq.*
فلّق *fallaq* /vt/ **1** to split into several pieces. *fallaqt-a-ha talat ḥitat* I split it in three. **2** to administer the bastinado to. — /vi/ **3** to become cracked, become covered with cracks. *ʔarḍ*^{i} *mfallaqa* cracked (parched) earth. **4** to take to one's heels, beat it. **5** *[naut]* to drift away from dockside. - vn *tafliiq*; ava/pva *mifallaq.*
تفاليق *tafaliiq* /pl n/ *[text]* dye-streaks.
اتفلّق *ʔitfallaq* /vi/ **1** to become cracked. *ʔil-ḥeṭaan itfallaqit* the walls have become covered with cracks. **2** to be split into several pieces. **3** to be bastinadoed. - ava/iva *mitfallaq.*

ف ل ق س
فلقس *falqas* **1** /vt/ *[coarse]* to make (s.o.) bend over. **2** /vi/ to bend over. - vn *falqasa*; ava/pva *mifalqas.*
اتفلقس *ʔitfalqas* /vi/ **1** to bend over. **2** to be made to bend over. - vn *tifalqiis*; ava/pva *mitfalqas.*

ف ل ك [1]
فلك *falak* /n/ **1** universe, celestial sphere. *ʕilm il-falak* astronomy. **2** /coll n/ metal discs on the bottom of a threshing sled (see Pl.D, 2). **3** /pl *falaayik*/ buttocks. **4** /n pl *ʔaflaak*/ star, planet.
فلكة *falaka*^{1} /unit n, pl *-aat*/ **1** one of the metal discs on the bottom of a threshing sled (see Pl.D, 2). **2** *[slang]* a buttock.
فلكى *falaki* /adj/ **1** astronomic(al). **2** astrological.

ف ل ك [2]
فلوكة *filuuka* /n pl *falaayik*/ felucca, (small) boat with sail.
فلايكى *falayki* /n pl *-yya*/ sailor of a felucca, boatman.

ف ل ك [3]
فلكة *falaka*^{2} <T *falaka*> /n pl *-aat*/ staff with a rope looped through its ends which, when twisted, secures the feet of one who is to be bastinadoed. - also *falaqa.*
فلّك *fallik* /vt/ to administer the bastinado to. - vn *tafliik*; ava/pva *mifallik.*
اتفلّك *ʔitfallik* /vi/ to be bastinadoed. - iva *mitfallik.*

(ف ل ك س)
فلكس *falaks* <Engl *flux*> /n/ soldering alloy.
فولكس *vulkis* or *fulkis* or *fuluks* <Germ trade name> /n/ Volkswagen car.

ف ل ك ش
فلكش *falkiʃ* /vt/ to upset, throw into disarray. *falkiʃt ig-gawaaza* I upset the marriage arrangements. - vn *falkaʃa*; ava/pva *mifalkiʃ.*
اتفلكش *ʔitfalkiʃ* /vi/ to be upset, be thrown into disarray. - iva *mitfalkiʃ.*

ف ل ل [1]
فلّ *fall*^{1} *(i)* /vi/ to slip away, make off. *ʔil-ḥabl*^{i} *fall*^{i} *min ʔiid-u* the rope slipped out of his hand. ‖*fall*^{i} *w-ṭaar* he sped off. - vn *fall, falalaan*; ava *faalil.*
فالل *faalil* /adj/ unravelled, untwisted. *ḥabl*^{i} *faalil* unravelled rope.
فلّ *fall*^{2} /n/ cheap quality jute cloth used for sacking.
فلة *falla*^{1} /unit n, pl *-aat*/ piece of jute cloth.

اتفلّ ʔitfall /vi/ to unravel, untwine. *ʔil-ħabl itfall* the rope has untwisted. - ava *mitfall*.

ف ل ل [2]
فلّ *fall*[3↑] *(i)* /vt/ to dent (iron). - commonly used in unelevated speech in the expressions *ma-yfill*[i] *-f il-ħadiid ʔilla l-ħadiid [prov]* (only iron dents iron) ≈ diamonds cut diamonds. *ʕamal-ha b-ṭariiqa tfill il-ħadiid* he did it with great force. - vn *fall, falalaan*; ava *faalil*; pva *mafluul*.

ف ل ل [3]
فلّ *fill* <Gr *phellos*> /coll n/ cork.
فلّة *filla*[1] /n pl *-aat*/ **1** /unit n/ a cork, a piece of cork. **2** cigarette filter.
فلّاية *fillaaya* = *filla*.

ف ل ل [4]
فلّ *full* /coll n/ Arabian jasmine (Jasminum sambac). - applied metaphorically with a complimentary sense: *bint*[i] *zayy il-full* a perfectly lovely girl. *ʔil-ʔasʕaar rixiiṣa w-maʕquula w-zayy il-full* the prices are cheap, reasonable and just dandy. *xallit if-ʃaqqa zayy il-full* she left the flat in perfect condition. *ʔana ʕawza l-hiduum zayy il-full* I want the clothes white as snow. ‖ *ṣabaaħ-ak full* and *ṣabaaħ il-full* ≈ a lovely morning to you! - *ya miit full* cheerful greeting or compliment. - *full*[a] *ʕaleek* well done!
فلّة *fulla* /unit n, pl *-aat*/ a jasmine flower.
فلّاية *fullaaya* = *fulla*.

ف ل ل ا
فيلّا *villa, filla*[2↓] <It *villa*> /fem n pl *-aat, vilal*/ **1** villa, detached house, bungalow. *villit-ak* or *ʔil-villa btaʕt-ak* your villa. **2** self-contained apartment comprising two storeys within a larger building, duplex apartment.

ف ل ل ز ط
فلّوط *falluuṭ* /adj pl *falaliiṭ*/ self-important.
فلّوطة *falluuṭa* /n/ pompous person.

ف ل ل ي ن
فلّين *filliin* /coll n/ **1** cork. **2** *[bot]* phellem.
فلّينة *filliina, falliina* /unit n, pl *-aat*/ a cork, a piece of cork.

ف ل م
فيلم *film* <Engl> /n pl *ʔaflaam*/ **1** film, movie. **2** photographic film.

ف ل م ن ك
فلمنك *falamank* <prob T *felemenk*> (also *gibna falamank*) /n/ Edam(-type) cheese.

ف ل ن [1]
فلان *fulaan*[2] or *filaan* /n, fem *fulaana* or *filaana*/ designation substituted for the name of an unspecified person. *bi-yquulu ʕala waaħid fulaan qalb-u ħnayyin* they say about someone, 'So-and-so has a kind heart'. *fulaan il-fulaani* Mr. So-and-so. *lis-sitt ik-kibiira fis-sinn aquul ya xalt-i fulaana* an older woman I address as my Aunt So-and-so. - /frequently used to avoid mentioning one's own name/ *qul-lu flaan bi-ysallim ʕaleek* ≈ give him my best wishes.
فلانى *fulaani* or *filaani* /adj */ adjectival equivalent of *fulaan*. *di nẓam-ha tirkab biṭ-ṭariiqa l-fulaniyya* it should be mounted in such-and-such a way. *ma-tqul-lii-f raaħ ħitta - qul-li raaħ il-ħitta l-fulaniyya* don't just tell me he's gone somewhere; tell me where he went exactly.

ف ل ن [2] see ف ل ا ن : *fulaan*[1]

ف ل ن [3] see ف ل ل ى ن : *filliin, filliina, falliina*

ف ل ن ك
فلنك *falank* <T *felenk*> /coll n/ sleeper(s), tie(s) (in a railway track).
فلنكة *falanka* /unit n, pl *-aat*/ a sleeper, a tie (in a railway track).
فلنكاية *falankaaya* = *falanka*.

ف ل ن ن see ف ن ل ل : *falinna*[1↓]

ف ل و
فلو *falw* /n/ colt.
فلوة *filwa* /n/ filly.

ف ل ى
فلّاية *fallaaya* /n pl *-aat*/ fine-tooth comb.
فلّى *falla*[2] /vt/ **1** to remove lice, nits, fleas or bugs from the hair or clothes of (s.o.). *ʔil-ʔumm*[i] *bi-tfalli ʕyal-ha* the mother picks the lice and nits from her children's hair. **2** to do a thorough and careful job on. *ʔana ʕawz-ak tifalli l-ʕarabiyya kull-a-ha* I want you to go over the whole car with a fine-tooth comb. - vn *tafliyya*; ava/pva *mifalli*.
اتفلّى *ʔitfalla* /vi/ **1a** to be removed from the hair and clothes (of lice etc.). **1b** to remove one's lice etc., or have them removed. *ʔiṭ-ṭeer bi-yitfalla wiṣ-ṣayyaad*

qaaʕid yitqalla [prov] (the birds pick at their nits while the hunter is on tenterhooks) while the unwary are at ease, he who wishes to exploit them tensely makes his plans. **2** to be gone over carefully and thoroughly, be gone over with a fine-tooth comb. - ava/iva *mitfalli*.

ف ل ى س – see ف ل س ف : *falyasuuf*

ف ل ى ن see ف ن ل ل : *falaayin*

ف ل ى ه
فيليه *fileeh* <Fr> /n pl *-aat*/ filet (of meat).

ف م ل ى ا
فاميليا *familya* <It *famiglia*> /n pl *-aat*/ family. ‖*ʔil-familya* polite form of reference to a wife.

ف م م
فم *fumm* /n pl *ʔifmaam, fimaam*/ **1a** mouth, orifice. ‖*fumm il-miʕda* the epigastrium. - *fumm il-xaliig* a district in Cairo, opposite Roda Island, at the entrance of the ancient Canal. - *ʔitkallim bil-fumm il-malyaan* he didn't mince his words. - *yislam fumm-ak* well said! - *yislam fumm illi sammaa-k* ≈ well said! well done! (indirect compliment to the person addressed). **1b** mouth-piece (of, e.g., a water-pipe, see Pl.I, 6). *fumm[i] sgaara* cigarette-holder. **2** (one) washing. *ʔil-ɣasiil ʕaayiz fummeen qabl[i] ma tiṭlaʕ il-buqaʕ* the laundry needs a couple of washings before the stains will come out.

ف ن ا ر
فنار *fanaar* <T *fenar* from Gr> /n pl *-aat*/ lighthouse.

ف ن ء see ف ن ى[1] : *finaaʔ*

ف ن ج ا ن see ف ن ج ل : *fingaan*

ف ن ج ر
فنجر *fangar* **1** /vt/ to lavish money on. *fuufi gooz ʔuxt-ik mifangar-ha ʔizzaay* just look how your sister's husband showers money on her! **2** /vi/ to spend lavishly (on s.o.). *ʔawwil ma qabaḍ il-ʔirfeen raaḥ fangar biihum ʕala ʔaṣḥaab-u* as soon as he had cashed the money he went and blew it all on (things for) his friends. - vn *fangara*; ava/pva *mifangar*.
فنجرى *fanjari* /n pl *-yya*/ big spender.
اتفنجر *ʔitfangar* /vi/ to spend money lavishly, be prodigal with money. *ʔayy[i] ḥaaga tuqaʕ fi-ʔiid-u b-yitfangar biiha* everything that comes his way he spends straight off. - vn *tifangiir*; ava *mitfangar*.

ف ن ج ص
فنجص *fangaṣ [deris]* **1** /vt/ to lavish money on. **2** /vi/ to live in high style. - vn *fangaṣa*; ava *mifangaṣ*.
اتفنجص *ʔitfangaṣ* /vi/ to spend money lavishly, be a big spender. - vn *tifangiiṣ*; ava *mitfanɣaṣ*.

ف ن ج ل
فنجال *fingaal* (also *fingaan*) /n pl *fanagiil, fanagiin*/ cup. *fingaal qahwa* (1) a coffee-cup. (2) a cup of coffee.
فنجل *fangil* **1** /vt/ to make (the eyes) round as saucers. **2** /vi/ to become wide open (of the eyes). ‖*ʕenee mifangila* he is wide awake. - vn *fangala*; ava/pva *mifangil*.
اتفنجل *ʔitfangil* /vi/ to grow round as saucers (of eyes). - ava *mitfangil*.

ف ن خ
فنخ *fanax (a)* **1** /vt/ to undo, break up. *fanaxu l-xuṭuuba* they broke the engagement. **2** /vi/ to fail, collapse. *ʔig-gawaaza fanaxit* the marriage has failed. - vn *fanx, fanaxaan*; ava *faanix*; pva *mafnuux*.
اتفنخ *ʔitfanax* /vi/ **1** to fail, come to naught. **2** to be made to fail, be brought to naught. - ava/iva *mitfinix*.
فنّخ *fannax* /vi/ to feel lazy, drowsy or listless (e.g., after a heavy meal). - vn *tafniix*; ava *mifannax*. see further under ف ن ى خ

ف ن د ا
فوندا *funda* <It *fonda*> /interj/ *[naut]* drop anchor!

ف ن د ا ن
فندان *fundaan* <Fr> /n/ fondant.
فندانة *fundaana* /unit n, pl *-aat*/ a piece of fondant.
فندناية *fundanaaya* = *fundaana*.

ف ن د ق
فندق *funduq* /n pl *fanaadiq*/ hotel.
فندق *fandaq* /vt/ to open completely (e.g., a door). *miin mifandaq il-baab kida* who's left the door wide open like that? - vn *fandaqa*; ava/pva *mifandaq*.
اتفندق *ʔitfandaq* /vi/ to be opened completely. - iva *mitfandaq*.

ف ن د ى
فوندى *fundi* <perh It *fondo*> /n/ **1** make-up base, foundation cream. **2** toe and heel reinforcements (of shoes).

ف ن ر see ف ن ا ر : *fanaar*

[1] (ف ن س)
فنس *fans* /adj invar/ useless, pointless. *riḥla fans* a useless trip.
فونس *funs* <prop n *Alphonse*> /n/ Alphonse mangoes. ‖*ʕaamil funs* ≈ full of himself, - also *ʔalfuns*.

[2] ف ن س see ف ن و س : *fanuus*

[1] ف ن ش
فنش *finiʃ* <Engl> /n/ finish, finishing off (in carpentry, varnishing etc.). *ʕamalt' finiʃ lik-kursi* I've put the finishing touches to the chair. *ʔidda l-maktab warniiʃ il-finiʃ* he gave the desk the final coat of varnish.
فنش *fanniʃ* /vt/ **1** to leave unfinished. *fanniʃt iʃ-ʃuɣla leeh* why did you drop the work in midstream? **2** to fire, give the sack to. - vn *tafniiʃ*; ava/pva *mifanniʃ*.
اتفنش *ʔitfanniʃ* /vi/ **1** to be left unfinished. **2** to be fired, be sacked. - iva *mitfanniʃ*.

[2] ف ن ش
مفنش *mifanniʃ: manaxiir mifanniʃa* wide, flaring nostrils.

[1] ف ن ط
فنط *funṭ* <perh It *punto*> /n/ champ, scorer. *ḥaawil yiʕmil funṭ' quddaam il-banaat* he tried to show off in front of the girls.

[2] ف ن ط
فنّط *fannaṭ* /vt/ to shuffle (cards). *fannaṭ il-kutʃiina w-qaṭaʕ-ha* he shuffled the cards and cut them. ‖*ʔana fannaṭt il-mugtamaʕ* I've been all through society, I've riffled through society. - vn *tafniiṭ*; ava/pva *mifannaṭ*.
اتفنّط *ʔitfannaṭ* /vi/ to be shuffled (of cards). ‖*naas mitfannaṭiin [slang]* select people, the *crème de la crème*. - iva *mitfannaṭ*.

ف ن ط ا ز see ف ن ط ا س : *funṭaaz*

ف ن ط ا س
فنطاس *funṭaas, fintaas* (also *funṭaaz*) /n pl *fanaṭiis, fanaṭiiz*/ large storage tank. *funṭaas gaaz* kerosene tank.

ف ن ط ز
فنطزيّة *fanṭaziyya* <It *fantasia*> **1** /n/ extravaganza. *lamma tirgaʕ ḥa-niʕmil fanṭaziyya* when you return we'll put on an extravaganza. *ʕamalu fanṭaziyya fid-dukkaan* they've done up the shop quite imaginatively. *hidum-ha baʕit fanṭaziyya* her clothes, now, are mere whimsy. *ʕaddeena yoom ʔaaxir fanṭaziyya* we've spent a most fantastic day! **2** /adj invar/ fanciful, capricious. *kalaam fanṭaziyya* fanciful talk, talk not to be taken seriously. *ʕiiʃa fanṭaziyya* life of pleasure, dolce vita. **3** /adv/ for free, gratis. *ʔiddaa-ni k-kitaab fanṭaziyya* he gave me the book with no charge. *rikibna l-ʔutubiis fanṭaziyya* we got a free bus ride.
فنطز *fanṭaz* **1** /vt/ to show a good time to. *ʔana ḥ-afanṭaz-ak lamma ʔangaḥ* I'll take you out on the town when I pass my exams. **2** /vi/ to enjoy oneself, have a good time. - vn *fanṭaza*; ava/pva *mifanṭaz*.
اتفنطز *ʔitfanṭaz* /vi/ **1** to enjoy oneself, have a good time. **2** to give oneself airs. *ʔinta b-titfanṭaz ʕala ʔeeh* what makes you so cocky? **3** to be given a good time. - ava/iva *mitfanṭaz*.

ف ن غ ر –
فونوغراف *funuɣraaf* <Fr> /n pl *-aat*/ *[obsol]* phonograph, record-player.

ف ن ك see ف ن ى ك : *finiik*

ف ن ل ل
فنلّة *fanilla* (also *falinna*↓) <prob T *fanilâ* from It> /n pl *-aat, fanaayil, falaayiñ*/ **1** vest, undershirt. **2** any short-sleeved casual shirt of lightweight (usually knitted) material, T-shirt. – /no pl/ **3** flannel. *banṭaloon fanilla* flannel slacks.

ف ن ل ى ا
فانيليا *fanilya* or *vanilya* (also *banilya*↓) <It *vaniglia*> /n/ vanilla. *jilaati vanilya* vanilla ice cream.

ف ن ن
فنّ *fann* /n pl *funuun*/ **1** art. *fann is-sinima* the art of the cinema. *ʔil-funuun ig-gamiila* the fine arts. ‖*ʔibn' fann* a skilled, dexterous person. - *ʔig-gunuun funuun [prov]* madness is of (all) kinds, it takes all sorts. **2** *ʔil-fann* the art of Egyptian popular song. *ɣaawi l-fann* devotee of popular music and song. *ʔahl il-fann* singers and musicians.
فنّى *fanni* /adj */ **1** artistic. *maghuud fanni* artistic effort. *rattibit il-ward' b-ṭariiqa fanniyya* she arranged the flowers artistically. *ʕamal fanni* a work of art. **2** expert. *fuxl' fanni* expert workmanship. *naas fanniyyiin fin-nukat* expert jokers. **3** technical. *taʕliim fanni* technical training. *muṣṭalaḥaat fanniyya* technical terms. *li-ʔasbaab fanniyya* for technical reasons. *ḍarba*

qaḍya fanniyya technical knockout. — /n */ **4** (certified) technician.

فنّان *fannaan* /n */ artist.

فنّن *fannin* /vi/ to be ingenious, be inventive. *bi-tfannin fil-ʕakl* she is a creative cook. *fannin fin-nayama* he juggled cleverly with the tune. ‖*saʕalt-u suʕaal duɣri wi-qaɛad yifannin* I asked him a straight question but he went on beating about the bush. - vn *tafniin*; ava *mifannin*.

تفنينة *tafniina* /pl *-aat, tafaniin/* instance noun of *tafniin*. ‖ *ʕabu t-tafaniin* a versatile man, a man of many talents.

اتفنّن *ʕitfannin* = *fannin*. *ʕin-naas il-ʕayyaam di b-yitfanninu fil-hayaafa* people these days are masters of triviality. - ava *mitfannin*.

ف ن و س

فانوس *fanuus* <Gr *phanos*> /n pl *fawaniis/* lantern. *fawaniis ramaḍaan* lanterns carried by children (originally by children begging a traditional tip) during Ramadan. ‖*fanuus ɛarabiyya* car headlight. *-fanuus siḥri* epidiascope, magic lantern.

ف ن ى [1]

فنى *fini (a)* /vi/ to come to nothing, perish. *yaama giil fini baɛd[i] giil* how many generations have come and gone! *ḥabaayib ktiir finyu taḥt[i] riglee-ha* many lovers were destroyed by her. - vn *fana*; ava *faani*.

فنى *fana (i)* /vt/ **1** to cause to perish, cause to come to nothing. *ʕiz-zinuub hiyya ɛadiww-i-na l-faani* sins are our mortal enemy, sins are our undoing. **2** to spend to no avail, waste. *faneet ɛumr-i f-xidmit-hum gum il-ʕaaxir daasu ɛalayya* I wasted my whole life in their service, and in the end they treated me like dirt. *yaama faneet waraq fi-ktaabit gawabaat* how much paper I've wasted writing letters. - vn *fanayaan*; ava *faani*; pva *mafni*.

فانى *faani* /adj */ **1** transient, ephemeral. *ʕid-dinya fanya* the world is ephemeral. *kull-u faani [prov]* nothing will last forever. **2** mortal.

فناء *finaaʕ* /n pl *-aat, ʕafniya/* courtyard. *finaaʕ il-madrasa* school yard, school playground.

اتفنى *ʕitfana* /vi/ passive of *fana*. - iva *mitfini*.

ف ن ى [2]

فونية *funya* <T *funya* from Gr> /n pl *-aat, funay, funy, fawaani/* nozzle (e.g., of a primus stove).

ف ن ى خ see also ف ن خ

فنيخ *fanyax* /vt/ **1** to prevent the fulfilment of. *fanyax il-fusḥa* he called off the outing. — /vi/ **2** to fail to be fulfilled, come to nothing. *ʕil-ɛuzuuma fanyaxit* the party never took place. *ʕil-ittifaaq fanyax* the agreement came to nothing. **3** to lie about, laze about. - vn *fanyaxa*; ava/pva *mifanyax*.

اتفنيخ *ʕitfanyax* /vi/ **1** passive of *fanyax* 1. **2** to feel lazy, feel drowsy (e.g., after a heavy meal). - vn *tifanyiix*; iva/ava *mitfanyax*.

ف ن ى ر

فنيار *funyaar* /n pl *-aat, fanayiir/* flaming torch, lamp with a naked flame.

فنير *fanyar* /vi/ to shine brightly (of a lamp, and the like). - vn *fanyara*; ava *mifanyar*.

ف ن ى ك

فنيك *finiik* <Fr *phénique*> /n/ carbolic acid.

ف ه

فه *fih* /fem n, pl *-aat*/ twentieth letter of the Arabic alphabet. - also *faa, faaʕ, feeh*.

ف ه د

فهد *fahd* /n pl *fuhuud, fuhúda*/ leopard.

ف ه ر س

فهرس *fihris, fahras[1]* /n pl *fahaaris/* index, catalogue. *fihris muḥtawayaat ik-kitaab* index of the contents of the book. *fihris kuruut* a card catalogue.

فهرس *fahras[2]* /vt/ to make a list of, index, catalogue. *bi-yfahrasu l-mawaḍiiɛ illi ḥa-titzaaɛ* they list the topics that will be broadcast. - vn *fahrasa*; ava/pva *mifahras*; pva *mufahras*.

اتفهرس *ʕitfahras* /vi/ to be indexed, be catalogued, be listed in order. - iva *mitfahras*.

ف ه ق

فهق *fahaq (a)* /vi/ to gasp, catch one's breath (in surprise or awe). ‖*fahaqit fi-wiʃʃ-u* she has cast an evil spell on him (by gasping with envy in his presence). - vn *fahq, fahaqaan*; ava *faahiq*.

فهقة *fahqa* /n pl *-aat*/ **1** /inst n/ a gasp. **2** facial skin blemish (believed to be caused by the gasp of a person with the evil eye).

اتفهق *ʕitfahaq* /vi/ (impersonal) passive of *fahaq*. *ʕitfahaq fi-wiʃʃ(-a-ha)* (she is) under a spell (caused by the gasp of a person with the evil eye). - iva *mitfihiq*.

ف ه ل و

فهلوى *fahlawi* <P *pahlawî*> /adj * and pl *-yya/* clever,

shrewd. *ʕil-walad da fahlawi* that boy is a smart operator.

فهلوة *fahlawa* /n/ cleverness. *xallaṣ if-fuxl^{i} b-fahlawa* he accomplished the work with nimble thinking. *nigiḥ bil-fahlawa* he pulled it off with his wits.

ف ه م

فهم *fihim (a)* /vt/ **1a** to understand. comprehend. *ma-fhimt^{i}-ʃ id-dars* I didn't understand the lesson. *ʕinta miʃ faahim ʔiimit kalaam-i* you don't realize what I'm saying. *bi-nifham baʕḍ* we understand each other. *fihimt il-maʔlab* I caught on to the trick. **1b** to see the reason for. *ʕana miʃ fahma ʔillit ʕadab-ak di* I don't understand your rudeness. **2** to have a grasp of. *ma-b-yifham-ʃ ingiliizi* he doesn't understand English. **3** to assume (to be plausible). *kunt^{i} faahim ʕinnu msaafir* I understood that he was out of town. — /vi/ **4** to have knowledge, be knowledgeable. *bi-tifham fil-muḥasba* do you know anything about accounting? *hiyya b-tifham fil-ʕuṣuul* she knows how to follow the code of social conduct. -vn *fahm*; ava *faahim*; pva *mafhuum*.

مفهوم *mafhuum*↑ /n pl *mafahiim*/ notion, concept. *ʕil-masal da ʕalaṭ bil-mafhuum ig-gidiid* that proverb is wrong according to the new way of thinking.

مفهوميّة *mafhumiyya* /n/ **1** understanding, judgement. *mafhumiyyit-i lil-mawḍuuʕ ʕinnu miʃ ḥa-yingaḥ* as I understand the matter, it will not succeed. ‖*yikuun fi-mafhumiyyit-ak ʕinn* be informed that, as in *yikuun fi-mafhumiyyit-ak ʕinni miʃ ḥ-aagi l-ʕaṣr* for your information, I shan't be coming in the afternoon. **2** understanding, sympathy. *ʕinta ʕabu l-mafhumiyya* or *ʕinta kull-ak mafhumiyya* you are very understanding.

فهّامة *fahhaama*↑ /adj invar/ discerning, intelligent, sharp.

فهّيم *fahhiim* /adj pl *fahhiima*/ discerning, intelligent, sharp.

اتفهم *ʔitfaham* /vi/ passive of *fihim*. -iva *mitfihim*.

انفهم *ʔinfaham* = *ʔitfaham*. -iva *minfihim*.

فهّم *fahhim* /vt/ to make understand, explain to. *fahhim-na yaʕni ʕeeh* tell us what it means. *xallii-ni ʕafahhim saami ʕafaan ma-yizʕal-ʃ* let me explain to Sami so that he doesn't get upset. -vn *tafhiim*; ava *mifahhim*.

اتفهّم *ʔitfahhim* /vt/ **1** to have (s.th.) explained. *ʔitfahhimna l-mawḍuuʕ kull-u* we had the whole thing explained to us. **2** to arrive at an understanding of. *xallii-ni ʕatfahhim il-mawʔif ig-gidiid li-waḥd-i* let me figure out the new situation by myself. -vn *tafahhum*; ava *mitfahhim*.

اتفاهم *ʔitfaahim* /vi/ **1** to seek a mutual understanding. *ʔaʕadt^{i} yoom bi-ḥaal-u ʕatfaahim maʕaa min ɣeer fayda* I spent a whole day trying to come to a mutual understanding with him, but it was no use. *sib-hum yitfahmu maʕa baʕḍ* leave them to work it out between themselves. **2** to arrive at a mutual understanding. *ʔitneen yifarku baʕḍ^{i} f-faʔʔa laazim yikuunu mitfahmiin* two people who share a flat must be in mutual agreement. -vn *tafaahum*; ava *mitfaahim*.

تفاهم *tafaahum* /n/ understanding, agreement. *suuʔ tafaahum* misunderstanding.

استفهم *ʔistafhim* /vi/ to inquire, make inquiries. *yalla nistafhim minhum ʕan il-ʔaḍiyya* let us ask them about the case. ‖*ʕalaamit istifhaam* question mark. -vn *ʔistifhaam*; ava *mistafhim*.

ف و ا ل

فوال *fuwaal, vuwaal* (also *buwaal*↓) <Fr> /n/ cotton voile.

ف و ت ¹

فات *faat (u)* /vt/ **1** to leave behind. *fuutu f-funaṭ ʕandi* leave the bags at my place. *ma-han-ʃ^{i} ʕalayya ʔâmʃi w-ʔafut-kum* I didn't have the heart to go away and leave you. *fatuu naas-u* his family abandoned him. **2** to pass by, slip by. *ʔid-door faat-ak* you missed your turn. *ma-yfut-ak-ʃ^{i} wala hamsa* not a whisper escapes you. *fat-ni l-ʔutubiis* I missed the bus. ‖*fat-ha l-ʔaṭr* she's missed the boat, she's on the shelf. -*ḥ-afut-lak di l-beeʕa* you can have it at your price this time. -*ʔilli faat-ak fuut-u [prov]* ≈ don't waste time with those who neglect you. -*faat-ak nuṣṣ^{i} ʕumr-ak* you missed something wonderful as in *faat-ak nuṣṣ^{i} ʕumr-ak illi ma-kunt^{i}-ʃ maʕaana ʔimbaariḥ bil-leel* you really missed something by not being with us last night! — /vi/ **3** to elapse, go by. *faat kaam yoom* a few days went by. *ʔis-sana lli faatit* last year. ‖ *ʔilli faat maat [prov]* ≈ what is done is done, let bygones be bygones. -*xalli yoom-ak yifuut ʕala xeer* ≈ lay off (or else)! -*yoom* (or *leela* etc.) *miʃ faayit* a day (or night) of unending trouble. -*nahaar-ak miʃ faayit* you won't see another day! I'll get you for that! **4a** to pass, pass by. *bi-tfuut min hina kull^{i} yoom* she passes through here daily. *ʔil-mayya bi-tfuut min taḥt il-baab* the water flows under the door. ‖*fuut ʕalee bil-makwa* give it a going-over with the iron. **4b** to slip by, slip past. *law ik-koora faatit minnu tibʔa goon* if the ball gets past him it's a goal. *ʔin-nukta faatit ʕalee* he didn't get the joke. **5** to pay a call, drop in. *fuut bukra*

drop in tomorrow. *futᵃ ʕala ʔaxuu-ya* I paid a call on my brother. *ma-tfuut ʕaleena* come and see us! ‖*fuut* (or *fuutu) biina ʕala* ... let's be off to .... **6** to become clear, become unblocked. *ʔil-masuura faatit* the pipe became unblocked. - vn *foot, fawaat, fawataan*; ava *faayit*.
¶ *faat fi-* to pass through, go through. ‖*yifuut fil-ħadiid* ≈ he is invincible.
فوتة *footà* /inst n, pl *-aat*/ **1** (short) visit. *futna ʕaleehum foota qṣayyara* we dropped in on them for a short visit. **2** bout, fit (of illness). *ʔikminnaha ħaamil bi-tfuut ʕaleeha fotaat kullⁱ saaʕa wit-tanya* since she's pregnant she has frequent (fainting) spells.
فوّت *fawwit* /vt/ **1** to allow to elapse. *ya rabbⁱ fawwit il-ʔayyaam di ʕala xeer* O Lord, let these days pass without harm! **2** to allow to go past, let through. *ʔil-buliiṣ ma-fawwit-naa-ʃ min iʃ-ʃariʕ* the police wouldn't let us through the street. *ʔil-baab ma-bi-yfawwit-ʃ il-ʕarabiyya* the doorway is too narrow for the car. *fawwit-lu l-ʕalṭa* overlook his mistake. ‖*ʔil-baab yifawwit gamal* (the door can let a camel through) ≈ go then! no one's stopping you! - *ʔismaʕ min hina w-fawwit min hina* let it in one ear and out the other. *-fawwit(-ha)* never mind! forget it! *-dool fawwituu-ha ʕaleek* they seem to have put one over on you. **3** to pass, cause to go along or through. *xad ik-koora w-fawwit-ha tafwiita ħilwa* he took the ball and made a beautiful pass. *fawwit il-xeeṭ fil-xaraz* string the beads! **4** to sanction, permit. *madaam ʕarabiyyaat iʃ-ʃirka ʕaṭlaana fawwituu-li ʔugrit it-taks* since the company car is out of order allow me the taxi fare. **5a** to cause to pass by, take past. *fawwit-ni min is-suuq* he took me past the market. **5b** to cause to visit, take for a visit. *fawwitt-a-ha ʕala ʔumm-i* I took her to visit my mother. — /vi/ **6** to slip. *ʔit-tiruus bi-tfawwit* the gears slip. ‖*muxx-i fawwit* I've slipped a cog, I can't keep my mind on things. *-fawwit fi-taqdiir* he miscalculated. **7** to be leaky. *ʔis-sifoon bi-yfawwit* the cistern leaks. **8** to break wind silently. - vn *tafwiit*; ava *mifawwit*.
تفويتة *tafwiita* /pl *-aat*/ instance noun of *tafwiit*.
اتفوّت *ʔitfawwit* /vi/ passive of *fawwit*. - iva *mitfawwit*.
اتفاوت *ʔitfaawit* /vi/ to vary. *mustawayaat mitfawta* varying standards. - vn *tafaawut*; ava *mitfaawit, mutafaawit*.

ف و ت ²
فوت *fuut* <Engl *foot*>: *gazma fuut* soccer boots.

ف و ج
فوج *foog* /n pl *ʔafwaag*/ group, party, band.

ف و ح
فاح *faaḥ (u)* /vi/ to spread, diffuse itself (of an odour). ‖*riiḥt-u faaḥit* ≈ his reputation has begun to stink. *- takl-u yruuḥ tifarraq-u yfuuḥ [prov]* ≈ food eaten is gone, food distributed to the poor is not forgotten. - vn *fooḥ, fawaḥaan*; ava *faayiḥ*.
فوّح *fawwaḥ* **1** /vt/ to cause to diffuse, spread (a smell). **2** /vi/ = *faaḥ*. - vn *tafwiiḥ*; ava/pva *mifawwaḥ*.

ف و خ ر
فوخر *fooxar* /vi/ to become hollow, disintegrate from within. *ʔil-ħeeṭa mfoxra* the wall is full of cavities. ‖*ʕaql-u mfooxar* he has holes in his head, he's loony. - ava *mifooxar*.

ف و ر ¹
فار *faar² (u)* /vi/ to boil to overflowing. *ʔibʕid il-laban ʕan in-naar qablⁱ ma yfuur* take the milk from the fire before it boils over. ‖*damm-u faar* his blood boiled, he became furious. - vn *fawaraan*; ava *faayir*.
فاير *faayir* /adj/ **1** (too) large. *maqaas faayir* large-size. *ʔij-jakitta fayra ʕalee* the jacket is too big for him. **2** vivacious and (too) accessible (of a girl). **3** ripe (of fruit).
فور *foorˆ: ʕala l-foor* immediately, straight away.
¶ *fawran* /adv/ immediately, straight away.
فورى *fawri* /adj/ instantaneous. ‖*targama fawriyya* simultaneous translation.
فورى *foori* /adv/ immediately, straight away. *ʔil-muḥaami b-yiqbaḍ il-muqaddam foori* the lawyer cashes the advance payment immediately. *dafʕⁱ b-taqsiiṭ ʔaw foori* payment in instalments or all at once.
فوّار *fawwaar* /adj invar/ effervescent, fizzy.
فوّر *fawwar¹* /vt/ to cause to boil up. *ma-tfawwar-ʃ il-qahwa laḥsan yiruuḥ il-wiff* don't let the coffee boil up or it'll lose its 'head'! ‖*fawwar damm-i* he made my blood boil, he made me furious. - vn *tafwiir*; ava/pva *mifawwar*.
اتفوّر *ʔitfawwar¹* /vi/ to be boiled up. - iva *mitfawwar*.

ف و ر ²
فورة *foora* <It *fuori*> /n/ score set before the start of a game, the first player to reach it being the winner.
فار *faar³ (u)* /vi/ to be completed (of a game, the players having reached the set score). - vn *fawaraan*; ava *faayir*.
فوّر *fawwar²* /vi/ **1** to reach the set score (in a game). — /vt/ **2** to reject, dispense with, drop. *fawwarna xamsiin fil-miyya min il-muwaẓẓafiin* we dismissed fifty percent of the employees, *fawwaru l-mafruuʕ* they

dropped the project. *laazim tifawwar il-beet* you must get the house off your hands. **3** to dismantle, take apart. *fawwar iṭ-ṭurumba* he dismantled the pump. *markib mifawwara* an unrigged ship. - vn *tafwiir*; ava/ pva *mifawwar*.

اتفوّر *ʔitfawwar²* /vi/ passive of *fawwar²*. - iva *mitfawwar*.

ف و ز

فاز *faaz (u)* /vi/ to win. *faazu bil-matʃ* they won the match. *fuzt ᵃ ɛalee* I beat him. *faaz bi-faraf* to win honourably. - vn *fawazaan, fooz*; ava *faayiz*.

فوز *fooz* /n/ victory.

فايز *faayiz* /n */ winner, victor.

ف و ض ¹

فوضى *fawḍa* /n/ chaos.

فوضوى *fawḍawi* **1** /adj * and pl *-yya*/ chaotic, anarchical. **2** /n * and pl *-yya*/ anarchist.

الفوضويّة *ʔil-fawḍawiyya* /n/ anarchism.

فوضجى *fawḍagi* /adj pl *-yya*/ **1** anarchical, disorderly. **2** heedless, irresponsible.

ف و ض ²

فوّض *fawwaḍ¹, fawwiḍ* /vt/ **1** to entrust, commit. *fawwiḍt ⁱ ʔamr-i liik ya rabb* Lord, I have entrusted my fate to You! **2** to empower, commission. *ʔana mfawwaḍ-ak fil-mawḍuuɛ* I've given you full powers to act in the matter. - vn *tafwiiḍ*; ava/pva *mifawwaḍ*.

مفوّض *mufawwaḍ* /adj */ empowered, authorized. *waziir mufawwaḍ* minister plenipotentiary.

مفوّضيّة *mifawwaḍiyya, mufawwaḍiyya* /n pl *-aat*/ (diplomatic) legation.

اتفوّض *ʔitfawwaḍ¹* /vi/ **1** to be entrusted, be committed. **2** to be empowered, be commissioned. - iva *mitfawwaḍ*.

فاوض *faawiḍ* /vt/ to negotiate with. *ḫa-nfawiḍ-hum ɛala ḥquq-na* are we going to negotiate with them about our rights? - vn *mifawḍa, mufawḍa*; ava *mifaawiḍ*.

مفاوضة *mufawḍa* /n pl *-aat*/ negotiation.

اتفاوض *ʔitfaawiḍ* /vi/ **1** to negotiate (with one another). **2** to be negotiated with. - vn *tafaawuḍ*; ava/ iva *mitfaawiḍ*.

ف و ض ³

فوّض *fawwaḍ²* /vt/ to leave (as a remnant). *lahafu l-ʔakl ⁱ w-ma-fawwaḍu-lii-ʃ ḫaaga* they wolfed down the food and left me nothing. - vn *tafwiiḍ*; ava/pva *mifawwaḍ*.

اتفوّض *ʔitfawwaḍ²* /vi/ to be left over. - iva *mitfawwaḍ*.

see further under ف ى ض

ف و ط

فوطة *fuuṭa* /n pl *fiwaṭ, fuwaṭ*/ **1a** towel. *fuuṭit wiff* hand towel. **1b** napkin. **2** dusting cloth. **3** saddle cloth. **4** covering or veil for a woman's head. **5** sanitary towel.

فوّاطة *fawwaaṭa* /n pl *-aat*/ towel rail, towel rack.

فوّط *fawwaṭ* /vt/ **1** to cover with a *fuuṭa*. *sawwaaq it-taks ⁱ fawwaṭ il-ɛaddaad ɛaʃaan ma-ḫadd ⁱ-ʃ yiqul-lu ʔuqaf* the taxi-driver wrapped the meter with a duster so that no-one would tell him to stop. **2** to dry with a towel. *fawwaṭit ras-ha* she dried her hair with a towel. — /vi/ **3** to put on a sanitary towel. - vn *tafwiiṭ*; ava/pva *mifawwaṭ*.

اتفوّط *ʔitfawwaṭ* /vi/ to be covered or cover oneself with a *fuuṭa*. - ava/iva *mitfawwaṭ*.

ف و ق

فاق *faaq (u)* **1** /vt/ to surpass. *faaq il-kull* he surpassed everyone. *ḫubb ⁱ yfuuq ʾil-waṣf* a love beyond description. **2** /vi/ to return to one's normal state of consciousness. *lissa ɛalayya n-noom - ʔistanna lamma ʔafuuq* I'm still sleepy, wait till I'm properly awake. *faaq min taʔsiir il-minawwim* he recovered from the effect of the sleeping pills. *fuqt ⁱ w-ɛirift ⁱ ʔamʃi* I sobered up and found I could walk. *faayiq wi-raayiq* in the best of (mental or physical) health. ‖*faaq li-nafs-(u)* to regain (one's) senses, start behaving in a reasonable manner again. *- da-nta faayiq* ≈ so you're in the mood (well, I'm not). - vn *fawaqaan*; ava *faayiq*.

فوق *fooq* **1** (also *fooq min*) /prep, w pron suff also *foqii-* (1st sing *fooqi* or *foqiyya*)/ **1a** on top of. *fooq is-suṭuuḥ* on the roof. *bi-yitlibis fooq ir-raas* it is worn on the head. *wiqiɛ min fooq il-madna* he fell from the top of the minaret. *lamma l-quuṭa tissabbik xaaliṣ fis-samna w-tibqa fooq minnaha* when the tomatoes are well cooked in the clarified butter and it has risen to the top. ‖*fooq ir-riiḥ* windward. **1b** over and above, in excess of. *ḫ-aḫuṭṭ-i-lak di fooq il-beeɛa* I'll throw this in for you free of charge. *ɛadad-hum fooq il-miyya* there are more than a hundred of them. **1c** above and beyond. *di ṣaɛba fooq ʔimkaniyyit if-fubbaan* this is too difficult for the young. *fooq il-ɛaada* extraordinary. **2** /adv/ above. *ma-fii-ʃ ḫadd ⁱ fooq* there's no one above, there's no one upstairs. *bi-yitɛayyinu min fooq* they are appointed from above. *bi-yaaxud kart ⁱ min fooq w-kart ⁱ min taḥt* he takes a card from the top and a card from the bottom. *baṣṣit-li min fooq li-taḥt* she looked me up and down. ‖*baqa fooq* he improved his lot. - *ʔilli ybuṣṣ ⁱ*

fooq yitɛab [prov] (who looks up will tire) ≈ envying those who are richer than yourself will bring you grief. ¶ *fooq ma* /conj/ above what, beyond what. *b-aḥibb-ik fooq ma tiṣawwari* I love you more than you imagine. *ʔif-faay murr[i] fooq ma d-dinya murra* the tea is more bitter than life! -*fooq ɛan* /prep/ more than. *ɛumr-u fooq ɛan miit sana* it is more than a hundred years old.

فوقانى *foqaani* /adj */ upper, uppermost. *ʔil-fakk il-foqaani* the upper jaw. *ʔil-foqaani taḥtaani* upside-down, topsy-turvy.

فوّق *fawwaq* /vt/ to restore to (one's normal state of) consciousness. *ʔiddii-lu ɋalam yifawwaq-u* give him a slap to bring him to. -vn *tafwiiq*; ava *mifawwaq*.

اتفوّق *ʔitfawwaq* /vi/ **1** to be brought to normal consciousness. **2** (also *tafawwaq*) to excel. *ʔil-ɋuṭn il-maṣri b-yitfawwaq fit-tiila* Egyptian cotton has the best staple. *nagaḥ bi-tafawwuq* he passed with high marks. -vn *tafawwuq*; ava/iva *mitfawwaq, mutafawwiq*.

ف و ل [1] see also **ف ء ل**

فوّل *fawwil[1]* /vi/ to mention possible misfortune, thus tempting Providence. *ma-tfawwil-f[i] ɛalee* don't jinx him by going on about it! -vn *tafwiil*; ava *mifawwil*.

اتفوّل *ʔitfawwil* /vi/ (impersonal) passive of *fawwil[1]*. *dool wahmagiyya l-daragit ʔinnuhum yixaafu min ʔayy[i] ḥaaga yitfawwil ɛaleeha* they are so superstitious that they fear anything one can possibly associate with an omen. -iva *mitfawwil*.

ف و ل [2]

فول *fuul* /coll n/ bean(s) (especially broad beans, one of the staples of the Egyptian diet). *fuul midammis* dried broad beans cooked in a stoppered container over a slow fire or in hot ashes. *fuul naabit* (1) dried broad beans soaked till they sprout. (2) a dish made of the same, variously seasoned. ‖*fuul sudaani* peanuts. -*fuul ruumi* a variety of large broad bean.

فولة *fuula* /unit n, pl -*aat*/ a bean, a broad bean. ‖*kull[i] fuula w-laha kayyaal [prov]* (every bean has its weigher) ≈ every Jack has his Jill. -*ma-titball[i]-ʃ fi-buqq-u fuula [prov]* he can't keep his mouth shut about anything, he has a big mouth. -*laqaṭt il-fuula* I saw through the trick. -*ɛaawiz yiɛraf il-fuula w-miin zaraɛ-ha* he wants to know every little detail. -*fuula wi-tqasamit nuṣṣeen* as like as two peas in a pod.

فولاية *fulaaya* = *fuula*.

فوليّة *fuliyya* /n/ **1** dish of peeled sprouted broad beans cooked with tomatoes. **2** confection made with peanuts.

فوّال *fawwaal* /n pl *fawwaala*/ grain-seller, corn-chandler.

فوّالة *fawwaala* /n pl -*aat*/ urn-shaped pot used for slow-cooking beans.

ف و ل [3]

فاول *faawil* <Engl> /n pl -*aat*/ foul, instance of foul play (in team games). *ɋarab fawlaat kitiir* he committed a lot of fouls.

فوّل *fawwil[2]* /vi/ to play dirty (in team sports). -vn *tafwiil*; ava *mifawwil*.

ف و ل [4] see **ف و ا ل**: *fuwaal*

ف ى

فى *fi-* /w pron suff *fii-* (1st sing *fiyya*)/ preposition indicating **1** location or position, both tangible and intangible. *fil-beet* in the house, at home. *fis-suuq* on the market. *ɋabilt-u fis-sikka* I met him on the way. *fir-radyu* on the radio. *mitrakkib fis-saɋf* mounted on the ceiling. *fil-miraaya* in the mirror. *fit-tilifoon* on the telephone. *ʔid-daɛwa fil-maḥkama* the case is in the court. *fii f-raas-u ḥagaat* (1) he is planning something, he has designs. (2) he has something on his mind. ‖*laabis ʔaxḍar f-axḍar* dressed all in green. **2** direction toward or to a position of contact with. *ramit nafs-a-ha fil-baḥr* she threw herself into the sea. *ma-tbuṣṣ[i]-ʃ fiʃ-ʃams* don't look into the sun. *wiʃʃ[i] f-wiʃʃ* face to face. *manaxiir-u fis-sama* he has his nose in the air, he is conceited. *ʔil-maḍrab xabaṭ fiṭ-ṭarabeeza* the bat knocked against the table. **3** circumstance or condition. *fil-bard* in the cold. *fin-naṭara* in the rain. *fi-faqr* in poverty. *fi-ɣyaab-ak* in your absence. *fi-ɛizz in-noom* in the depths of sleep. *qult[i] f-sirr-i* I said to myself. **4** position or point in time. *ʔiḥna ʔasfiin ʔinn[i] ginaa-lak fis-saɛaa-di* we're sorry to have come at such an hour. *fi-yoom il-gumɛa* on Friday. *fi-mawaɛiid muḥaddada* at specified times. *ma-qult[i]-lii-ʃ fil-ʔawwil leeh* why didn't you tell me in the first place? *ʔiḥna f-ʃahr[i] sitta* this is the month of June. **5** qualification or specification. *ʔarbiɛiin santi fiṭ-ṭuul* forty centimetres in length. **6** object of attention, endeavour or design. *bi-yitkallim fiʃ-ʃuɣl* he's talking about work. *ḥ-aɛmil ʔeeh fir-raagil da* what am I to do with this man? *huwwa lli ɛamal-ha fiina* he's the one who did it to us. *ɋaddim fiyya ɛariiḍa* he presented a petition against me. *ʔawṣaaf ma-hiyyaa-ʃ fii* inapposite descriptions of him. *ʔana fi-lli baɛd[i] kida* I'm worried about what's coming. *xud-lak fiiha bariiza* take ten piastres for it. *ɣaff[i] fil-mizaan* he rigged the scales. *fiiha*

ʕeeh law xaragtᵢ l-waḥd-i what's wrong with my going out on my own? **7** cause or reason. ɛiyi fiiha he became ill because of it. ʕitxanqu fi-bint they quarrelled over a girl. xadtᵢ fiiha talatt iyyaam giza I was docked three days' pay because of it. **8** multiplication. talaata f-talaata three times three. **9a** ratio. dasatiir xamsiin fi-xamsiin building stones, fifty by fifty. ɛaʃara fil-miyya ten percent. **9b** rate. ʕooḍa bi-tneen gineeh fiʃ-ʃahr a room for two pounds a month. **10** partitive relationship. waaḥid fiina one of us. ḥaddᵢ fiikum muɛtariḍ does anyone of you object? miin fiihum ʕaḥsan xayyaaṭ which of them is the best tailor? ‖ ʕinta lli fiihum you're the best among them. **11** sequential relationship. yoom fi-yoom day after day. sigaara f-sigaara cigarette after cigarette. **12** /with transitive verbs/ intensification or prolongation of action. bi-yḥayyu f-baɛḍ they greet one another warmly. bi-ynaḍḍaf fis-silaaḥ he's cleaning away at the weapons. ḍarab fiyya he gave me a beating. zaakir fi-duruus-ak ʕaḥsan-lak you'd do better to work at your lessons.

فيه *fii, fiih* /part/ there is, there are. *fii ɛarabiyya barra* there is a car outside. *ma-fii-ʃ ḥaddᵢ hina* there is no one here. *fii sittaat bi-yiʃtaɤalu fil-ḥukuuma* there are women working in the government. *fii naas ṣanayɛiyya b-tilbis ɛafriita* there are some workmen who wear overalls. ‖ *fii ʕeeh* what's up? what's the matter? - *(lissa) ma-fii-ʃ* there has not (yet) elapsed, as in *miʃi min hina ma-fii-ʃ saaɛa* he left here less than an hour ago, *lissa ma-fii-ʃ gumɛa* less than a week ago.

ف ى ت ق

see also ف ت ق

فيتق *feetaq* /vi/ to develop a hernia. - ava *mifeetaq*.

ف ى د

فاد *faad (i)* /vt/ **1** to benefit. *da mumkin yifiid il-balad kitiir* that could help the country a lot. **2** to apprise. *fad-ni ɛan istilaam gawaab-i* he acknowledged receipt of my letter. **3** to reply to (s.o.) in response to a request for information. *ma-fidtᵢ-nii-ʃ bil-maṭluub* you didn't give me the information I asked for. - vn *fayadaan*; ava *faayid*.

فايدة، فائدة *fayda* /n pl *fawaayid*/ **1** benefit, advantage. *ʕeeh faydit il-ɤamm* what's the use of worrying? *di baɛzaqa fi-lli ma-luu-ʃ fayda* this is squandering money for nothing. ‖ *ma-fii-ʃ fayda* it's no use, there's no point, as in *ʕana garrabtᵢ kullᵃ ḥaaga bassᵢ ma-fii-ʃ fayda* I have tried everything, but nothing works. **2** interest (on an investment). *siɛr il-fayda* the rate of interest.

أفيد *ʕafyad* /el/ more/most beneficial, more/most advantageous.

أفاد *ʕafaadᵗ = faad*. - vn *ʕifaada*; ava *mufiid*.

إفادة *ʕifaada* /n pl *-aat*/ **1** response to a request for information. **2** notification.

مفيد *mufiid* /adj/ **1** useful, beneficial. *ʕakl mufiid* nourishing food. ‖ *ʕil-muxtaṣar il-mufiid* in short. **2** *[gram]* complete (of a sentence).

استفاد *ʕistafaad (yistafiid, yistafaadᵗ)* /vi/ to derive benefit. *ʕid-dars illi tɛallimnaa ḍaruuri nistafaad minnu* we'll surely benefit by the lesson we've learned. - vn *ʕistifaada*; ava *mistifiid, mustafiid*.

مستفيد *mustafiid* /n */ beneficiary.

ف ى ر

فير *feer* <Fr *fer*> /n pl *-aat*/ curling or crimping iron.

ف ى روز

see ف ر و ز

ف ى ز

فيزة *fiiza, viisa* <prob Fr> /n pl *-aat, fiyaz*/ visa.

ف ى س ك

فياسكة *fiyaska* <It *fiasca*> /n pl *-aat*/ flask.

ف ى ش

فيش *fiif* <Fr *fiche*> /coll n/ **1a** counter(s), token(s), chip(s) (in games). **1b** metal tokens stamped by the bank with the number of a promissory note and retained by the drawer. **2** index cards. — /n/ **3** *fiif wi-taʃbiih* official police document bearing finger-prints and a photograph which a citizen must present when applying for the Civil Service or the Armed Forces.

فيشة *fiiʃa* **1** /n pl *-aat*/ electric plug. **2** /unit n pl *-aat, fiyaʃ*/ **2a** a counter, a token, a chip (in games). **2b** a metal token given to the drawer of a promissory note. **2c** an index card. **3** /no pl/ = *fiif w-taʃbiih*.

فيّش *fayyiʃ* /vt/ to make a record of (promissory notes, of a bank). - vn *tafyiiʃ*; ava *mifayyiʃ*.

اتفيّش *ʕitfayyiʃ* /vi/ passive of *fayyiʃ*. *kimbiyaala mitfayyiʃa* recorded promissory note. - iva *mitfayyiʃ*.

ف ى ض

see also ف و ض ³

فاض *faaḍ (i)* /vi/ **1** to be left over, remain. *faaḍ maɛaaya xamsa saaɤ* I was left with five piastres. *ʕilli yfiiḍ mid-diriis yiwakkiluu lil-bahaayim* the dried clover that's left they feed to the animals. **2** to flood, overflow. *ʕil-baḥrᵢ faaḍ* the river flooded. *ɛenay-ya faaḍit bid-dumuuɛ* my eyes flooded with tears. ‖ *faaḍ biiha l-buka* she could not restrain her tears. - *faaḍ biihum* they had enough, they became fed up. - *ɛala feeḍ il-kariim* (living

on the bounty of God) penniless. -vn *feeḍ, fayaḍaan*; ava *faayiḍ*.
فيضان *fayaḍaan* /n pl *-aat*/ flood.

ف ى ظ
فايظ *faayiẓ* /n/ **1** excess, overflow, surplus. *ʕiṣ-ṣakmaan bi-yṭallaɛ il-faayiẓ min il-ɛarabiyya* the exhaust-pipe lets the excess gases out of the car. **2** overflow outlet. *faayiẓ il-banyu* the bath-tub overflow outlet. **3a** usurious rate of interest. *xad ɛalee faayiẓ* he charged an excessive rate of interest on it. *bi-ysallif bil-faayiẓ* he makes loans at usurious rates. **3b** *ʕil-faayiẓ* usury. *fuvlit-u l-faayiẓ* his profession is usury.
فايظجى *fayiẓgi* /n pl *-yya*/ usurer.
فيّظ *fayyaẓ* **1** /vt/ to relieve or carry off an overflow. *ʕil-xurm*^{i} *bi-yfayyaẓ il-mayya lamma tziid* the hole lets out the water when it rises. **2** /vi/ to act as an outlet for an overflow. *ʕil-balf*^{i} *bi-yfayyaẓ li-waḫd-u* the (relief) valve works automatically. **3** to practise usury. -vn *tafyiiẓ*; ava/pva *mifayyaẓ*.

ف ى ع
فاع *faaɛ (i)* /vi/ **1** to spread, diffuse (of an odour). **2** to bestir oneself to (vigorous) action. *fiɛi*^{i} *fiihum ḍarb*^{i} *bil-ɛaṣaaya* I fell upon them with the stick. -vn *feeɛ, fayaɛaan*; ava *faayiɛ*.
فيعة *feeɛa* /inst n, pl *-aat*/ a spurt of activity.
فيّع *fayyaɛ* /vt/ **1** to diffuse (an odour). **2** to arouse to (vigorous) action. *kal ṭurfi fayyaɛ-u fil-ʕakl*^{i} *xallaṣ ɛalee* the pickles he ate made him attack the food with gusto so that he polished it off. -vn *tafyiiɛ*; ava/pva *mifayyaɛ*.
اتفيّع *ʕitfayyaɛ* /vi/ to be aroused to (vigorous) action. -iva *mitfayyaɛ*.

ف ى ل [1]
فيل *fiil* /n pl *fiyala, ʕafyaal, fiyaal, fiyuul, fuyuul, fiyúla, fiyíla*/ **1** elephant. ‖*banṭaloon rigl il-fiil* bell-bottomed trousers. -*sinn il-fiil* ivory. -*daaʕ il-fiil [path]* elephantiasis. **2** bishop (in chess).
فيلة *fiila*^{1} /n pl *-aat*/ female elephant.
فيّل *fayyil* /vi/ *[deris]* to grow to elephantine proportions, become big and fat. -vn *tafyiil*; ava *mifayyil*.

ف ى ل [2]
فيله *fiila*^{2} <Gr *phullo*> /n/ paper-thin sheets of dough used in flaky pastry, mille-feuille.

ف ى ل س – see ف ل س : *faylasuuf*

ف ى ل ل ا
فيلّا *fiyilla* <trade name *Viyella*> /n/ twill-weave flannel made of a mixture of cotton and wool.

ف ى ن
فين *feen* **1** /interrog adv/ where? at what place? *sagayr-i feen* where are my cigarettes? *huwwa saakin feen* where does he live? *ʕinta ruḥt*^{i} *feen* where did you go? ‖*di kaanit feen w-ana feen* or *wi-da kan-li feen* ≈ how in the world did this happen to me? - *ʕinta feen-ak* where've you been keeping yourself? -*feen wi-feen lamma* it seemed like an eternity, it took a long time, as in *feen wi-feen lamma ga taks*^{i} *w-wiqif* it seemed like an eternity before a taxi came and stopped! *feen wi-feen lamma yxallaṣ* it takes him ages to finish! *feen wi-feen lamma tlaaqi l-mubilyaat di* this furniture is hard to find, you'll spend ages looking for it! -*feen* ... exclamation expressing nostalgia or nostalgic regret ≈ ah, alas, how long ago ..., as in *feen ʕayyaam-ak lamma kunna b-niftaval sawa* alas, how long it's been since we worked together! *feen min yoom ma kunna sawa f-bariis* ah, how long ago it was that we were in Paris together! -*(bass*^{i}*) feen* ... but alas, as in *kunt*^{a} *ɛawza ʕasaafir bariis bass*^{i} *feen* I wanted to travel to Paris, but alas .... **2** /rel pron/ wherever. *feen ṭarabeezit il-ʕakl*^{i} *tlaqii gambaha* wherever the dining table is, you'll find him beside it. ‖*law kunt*^{i} *feen* wherever you may be, as in *ḫ-agiib-ak taani law kunt*^{i} *feen* I'll bring you back no matter where you may be.

ف ى ن ك
فيونكة *fiyunka* <T *fiyonga* from It> /n pl *-aat*/ bow. *ɛamalit laha ḍfirteen bi-fyunka* she put her hair in two plaits tied with a bow.

ف ى ن و
فينو *fiinu* <It *fino*> /adj invar/ fine, fine-textured. *xarasaana fiinu* fine-textured concrete. ‖*ɛeef fiinu* French(-style) bread (usually made with white flour).

ف ى ه
فيه *feeh* /fem n, pl *-aat*/ twentieth letter of the Arabic alphabet. -also *faa, faaʕ, fih*.

ف ى ى [1]
فيّة، فئة *fiyya* /n pl *-aat*/ grade, category. *ʕil-qumaaʃ fiyyaat tabaɛ guudit iṣ-ṣanf* cloth comes in different grades according to the quality of the type. *ʕiddii-ni talat ṭawaabiɛ min fiyyit ɛaʃara saax* give me three ten-piastre stamps. see further under ف ء

فيّا *fayya* /vt/ to grade, categorize, sort. ʕ*il-beeḍ nifayyii ḥasab il-ḥagm* we sort the eggs according to size. - ava/ pva *mifayyi*.
اتفيّا ʕ*itfayya* /vi/ to be graded, be categorized, be sorted. - iva *mitfayyi*.

[2] ف ي ي see ف ا ي : *faaya*

ف ي ي و م
الفيّوم ʕ*il-fayyuum* /prop n/ the Fayoum, large oasis south of Cairo (one of the richest agricultural areas of Egypt, considered, by some, to be the dividing point between Upper and Lower Egypt).

فيّومي *fayyuumi* '/pl -*yya*/ **1** /adj/ pertaining to the Fayoum. ‖ (ʒ*inab*) *fayyuumi* variety of sweet yellow grape. -*farxa fayyuumi* variety of speckled chicken. **2** /n/ an inhabitant of the Fayoum.

ف ي ي ي س
فيّيس *fayyiis* /adj pl *fayyiisa*/ extravagantly generous, excessively open-handed.

ق

ق ا ع see ق و ع : *qaaɛ, qaaɛa, ɋaaɛa*

ق ا ف

قاف *qaaf* /fem n, pl *-aat*/ twenty-first letter of the Arabic alphabet. ‖ *gabal qaaf* name of legendary mountain, said to lie at the end of the earth and to be the place upon which Adam descended after being expelled from the Garden.

قاف *ɋaaf: bi-yitkallim bil-ɋaaf [deris]* he speaks in a pompous way.

ق ا م see ¹ ق و م : *ɋaama*

ق ب ب

قبّ *ɋabb (i)* /vi/ **1** to rise, swell. *ʕik-karbunaatu yxalli l-keeka tɋibb* baking-soda makes the cake rise. **2** to bob up, surface. *ʁiṭis wi-ɋabb¹ bɛʕiid ɛanni* he dived and surfaced far from me. ‖ *ɋabb¹ bil-filuus* he came up with the money (i.e. having dived into his resources or pockets for it). -vn *ɋabb, ɋababaan*; ava *ɋaabib*.

قبّة *ɋabba¹* /n pl *-aat, ɋababaabi↓*/ neck opening of a galabiya or *sideeri*.

قبّة *ɋubba* /n pl *ɋubab, ɋubbaat*/ **1** dome, cupola. ‖ *yiɛmil min il-ḥabba ɋubba [prov]* ≈ he makes a mountain out of a molehill. *-faakir ʕinn¹ taḥt il-ɋubba ʃeex [prov]* (he is) under the impression that there is a buried saint under the dome (of one who is deceived by outward appearances). **2** roof of a mud oven (see Pl.C, 7).

قبّب *ɋabbib* /vt/ **1** to puff up, cause to swell. *ʕil-xabṭa ɋabbibit ɋurt-u* the blow made his forehead swell. *ʕiʃ-ʃams¹ ɋabbibit gild-i* the sun blistered my skin. **2** to cause to rise, cause to surface. — /vi/ **3** to break out in blisters. -vn *taɋbiib*; ava/pva *miɋabbib*.

مقبّب *miɋabbib* /adj */ domed, convex.

اتقبّب *ʕitɋabbib* /vi/ passive of *ɋabbib* 1 and 2. -iva *mitɋabbib*.

ق ب ح

قباحة *ɋabaaḥa* /n/ **1** obscenity. *kalaam ɋabaaḥa [children]* dirty words. **2** rudeness.

قبيح *qabiiḥ* /adj/ ugly.

قبيح *ɋabiiḥ* /adj pl *ɋubaḥa, ɋubaaḥ*/ obscene (especially in language). *walad ɋabiiḥ* foul-mouthed kid. *film¹ ɋabiiḥ* blue movie.

قبايح *ɋabaayiḥ* /pl n/ dirty tricks, low acts.

أقبح *ʔaɋbaḥ* /el/ **1** more/most obscene or foul-mouthed. **2** more/most ugly.

قبّوح *ɋabbuuḥ: ɋabbuuḥ ya ɋabbuuḥ* ≈ what a crying shame! (the opening line of a folk song surviving only in a children's counting game).

قبّح *ɋabbaḥ* /vi/ to behave in an obscene or objectionable manner (especially by using bad language). -vn *taɋbiiḥ*; ava *miɋabbaḥ*.

اتقبّح *ʕitɋabbaḥ* /vi/ (impersonal) passive of *ɋabbaḥ*. *yaama tɋabbaḥ fiyya* how many times I was abused! -iva *mitɋabbaḥ*.

ق ب ر

قبر *ɋabar (u)* /vt/ to destroy, ruin (s.o. or s.o.'s career). *taɋriir il-mudiir ɋabar il-muwaẓẓaf bi-ḥirmaan-ha mit-tarqiyya* the manager's report has ruined the employee by depriving him of promotion. -vn *ɋabr*; ava *ɋaabir*; pva *maɋbuur*.

قبر *ɋabr* /n pl *ɋubuur*/ grave, tomb. ‖ *rigl-u wil-ɋabr* he is too old to live long. *-laha ɛeen baṣṣit-ha wil-ɋabr* ≈ she has an evil eye that is lethal.

مقبرة *maɋbara* /n pl *maɋaabir*/ **1** grave. ‖ *baɛd¹ ma raaḥ il-maɋbara baɋa fii sukkara [prov]* ≈ he was praised only after death (of one who, when alive, suffered from people's ingratitude). **2** /also pl *maqaabir*/ graveyard.

اتقبر *ʕitɋabar* /vi/ to be entombed. *ʕahu tɋabar allaah la*

yirḥam-u ≈ now he's buried may God have no mercy on him! - iva *mitqibir*.
انقبر *ʔinqabar* = *ʔitqabar*. - iva *minqibir*.

ق ب ر ص
قبرص *qubruṣ* /prop n/ Cyprus.
قبرصى *qubruṣi* /pl *qabarṣa*/ **1** /adj/ pertaining to Cyprus. ‖*ḥumaar qubruṣi* breed of tall black donkey. **2** /n/ a Cypriot.

ق ب ص
قبّص *qabbaṣ* **1** /vt/ to knead (dough). **2** /vi/ *[coarse]* to masturbate, jerk off. - vn *taqbiiṣ*; ava/pva *miqabbaṣ*.
اتقبّص *ʔitqabbaṣ* /vi/ to be kneaded (of dough). - iva *mitqabbaṣ*.

ق ب ض
قبض *qabaḍ (a)* /vt/ **1** to cash, convert into cash. *qabaḍt*^{i} *ʃiik* I cashed a cheque. *qabaḍ il-murattab* he cashed his salary. **2** to receive payment, get paid. *bi-yiqbaḍ mil-murattab talatiin gineeh* he receives thirty pounds in salary. *ḥ-araggaɛ-lak il-filuus lamma ʔaqbaḍ* I'll return the money to you when I'm paid. **3** to depress (emotionally). *ʔil-manẓar da ḥaqiiqi qabaḍ-ni* that sight really depressed me. *qalb-i maqbuuḍ* or *nifs-i maqbuuḍa* I'm depressed. — /vi/ **4a** to take hold. *qabaḍ fiyya* he seized me. ‖*nafas-i maqbuuḍ* I can hardly breathe. **4b** to make an arrest. *lamma qabaḍu ɛalayya ʔiɛtaraft*^{i} *quddaam il-buliiṣ* when they arrested me I confessed before the police. - vn *qabḍ, qabaḍaan*; ava *qaabiḍ*; pva *maqbuuḍ*.
قبضة *qabḍa* /n pl *-aat, qubaḍ*/ **1** linear measure equal to 12.5 centimetres. **2a** fist. ‖*qabḍit ḥadiid* knuckle-duster. *-qabḍit baab* door knocker. **2b** hilt, handle. **2c** crosspiece forming the grip on the upright handle of a plough (see Pl.D, 17). — /no pl/ **3** depression.
قبضيّة *qabḍiyya* /n pl *-aat*/ cash payment (of salary or wages).
مقبوض *maqbuuḍ* /n/ down payment.
مقبض *maqbaḍ* /n pl *maqaabiḍ*/ handle. *maqbaḍ il-baab* door knob.
مقبض *muqbiḍ* /adj */ depressing, oppressive. *ma-qdirt*^{i}*-ʃ ʔastaḥmil il-gaww il-muqbiḍ da* I couldn't bear that heavy atmosphere.
اتقبض *ʔitqabaḍ* /vi/ **1** to be cashed, be converted into cash. **2a** to be gripped, be seized. *ʔitqabaḍt*^{i} *min kitf-i* I was seized by the shoulder. **2b** to seize up, contract. *ʔir-raḥim itqabaḍ* the uterus contracted. **2c** (impersonal) passive of *qabaḍ* 3b. *ʔitqabaḍ ɛal-ḥaraami* the thief was caught. **3** to become depressed. *ʔitqabaḍna min il-film* we were depressed by the film. - ava/iva *mitqibiḍ*.
انقبض *ʔinqabaḍ* = *ʔitqabaḍ*. - vn *ʔinqibaaḍ*; ava/iva *minqibiḍ*.
قبّض *qabbaḍ* /vt/ to hand over (money due) to. *ḥ-aqabbaḍ-ak bukra* I'll pay you tomorrow. *ʔiṣ-ṣarraaf ma-rḍii-ʃ yiqabbaḍ-ni* the cashier wouldn't give me my money. - vn *taqbiiḍ*; ava/pva *miqabbaḍ*.
اتقبّض *ʔitqabbaḍ* /vi/ to be paid. - iva *mitqabbaḍ*.
متقبّض *mitqabbaḍ* /n/ **1** down payment. **2** *ʔil-mitqabbaḍ* the first part of the marriage settlement (the second being payable in the event of divorce or of the death of the husband).

ق ب ط
قبطى *qibṭi* /pl *ʔaqbaaṭ, qabaṭ, qibaṭ*/ **1** /adj/ Coptic. **2** /n/ **2a** a Copt. **2b** /no pl/ the Coptic language.

ق ب ط ا ن
قبطان *qubṭaan, qabṭaan* <It *capitano*> /n pl *qabaṭna*/ ship's captain.

[1] ق ب ق ب
قبقاب *qubqaab* /n pl *qabaqiib*/ **1** pair of pattens, pair of wooden-soled sandals (see Pl.F, 19). ‖*qubqaab bi-ɛagal* pair of roller-skates. **2** *[auto]* tilting blocks for a car.
قباقيبى *qabaqiibi* /adj invar/ pertaining to *qabaqiib*, clog-like. ‖*musmaar qabaqiibi [carp]* tack.

[2] ق ب ق ب
قبقب *qabqib, qabqab* **1** /vt/ to cause to swell or blister. *ʔeeh illi qabqib ʃafayf-ak kida* what gave you these blisters on your lips? **2** /vi/ to become puffy, swell. *ɛeeʃ miqabqib* light puffy bread. - vn *qabqaba*; ava/pva *miqabqib, miqabqab*.

[1] ق ب ل
قبل *qibil, qabal*^{i} *(a)* /vt/ **1a** to accept. *ʔik-kulliyya qiblit-ni* the college accepted me. *ma-b-aqbal-ʃ*^{i} *rafwa* I don't take bribes. *ʔin-nabi qibil il-hadiyya* the Prophet accepted gifts! (in urging acceptance of s.th.). **1b** to find acceptable. *ʔil-makana di ma-b-tiqbal-ʃ*^{i} *banziin* this machine won't take petrol. *ʔir-raagil da m-aqbal-uu-ʃ xaaliṣ* I can't stand that man! ‖*ḥaaga tiqbal-ha l-ɛeen* something pleasing to the eye. — /vi/ **2** to be accepted, be admitted. *qibil fi-kulliyyit iṭ-ṭibb* he was admitted to the faculty of medicine. **3** /preverb/ to find it acceptable to, be willing to. *ma-qiblit-ʃ*^{i} *titgawwiz-u* she wasn't willing to marry him. - vn

ɋabalaan, ɋubuul, ɋabuul; ava *ɋaabil, ɋablaan*; pva *maɋbuul*.

¶ *ɋaabil* (or *ɋaabil) li-*↑ capable of, susceptible to, as in *ɋaabil lil-iftiʒaal* combustible, *raagil ɋaabil lil-iɋtinaaʒ* a man who can be convinced, *ʃil-iqtiraaḥ ɋaabil lit-tanfiiz* the suggestion is practicable.

قبول *ɋubuul, ɋabuul, ɋubuul, ɋabuul* /n/ assent, approval, acceptance. ‖ *(ʃimtiḥaan) il-ɋubuul* elementary school certificate.

قابليّة *ɋaabiliyya* /n/ **1** inclination. *ma-lii-ʃ ɋaabiliyya lil-ʃakl* I don't feel like eating. *ma-luu-ʃ ɋaabiliyya yitkallim fil-mawḍuuʒ da* he doesn't feel like talking about that. **2** susceptibility. *ʒandu ɋaabiliyya lil-bard* he is susceptible to colds. **3** capability. *ma-luu-ʃ ɋaabiliyya lit-tafaahum* he's incapable of being reasoned with.

مقبول *maɋbuul* /n/ *[acad]* the university grade Satisfactory (the lowest pass grade).

قبيلة *ɋabiila* /n pl *ɋabaayil*/ tribe.

اتقبل *ʃitɋabal* /vi/ to be accepted. *ʃitɋabal fil-mustaffa* he was admitted to the hospital. - iva *mitɋibil*.

انقبل *ʃinɋabal* = *ʃitɋabal*. - iva *minɋibil*.

قبّل *ɋabbil*[1] /vt/ to cause to be accepted. *daragaat-i ɋabbilit-ni fil-ḥuɋuuɋ* my grades secured me a place in the (faculty of) law. - ava/pva *miɋabbil*.

اتقبّل *ʃitɋabbil* /vt/ to accept, receive. *rabb-i-na yitɋabbil iṣ-ṣala* God hears (our) prayers. *ʃitɋabbilna l-ʒaza* we received condolences. *ma-b-titɋabbil-ʃ*[i] *kalaam-i* she doesn't accept my advice. - ava *mitɋabbil*.

ق ب ل [2]

قبل *ɋabl* (also *ɋabl*[i] *min*) /prep; w foll pron suff also *ɋablii-* (1st sing *ɋabliyya*)/ before. *miin kaan saakin hina ɋablina* who was living here before us? *ga ɋablüha b-yoom* he arrived a day before her. *ʃitʒayyin ɋabl*[i] *minni b-xamas siniin* he was appointed five years before me. ‖ *la ɋabli wala baʒdi* ≈ my like has not been seen before nor will it be seen again! as in *ʃiftara ʒarabiyya bi-tɋuul la ɋabli wala baʒdi* he bought a car the like of which has never been seen. - *ʃin-nahar-da ɋabl*[i] *bukra* the sooner the better.

¶ *ɋabl*[i] *ma* /conj/ before. *bi-yaakul kitiir ɋabl*[i] *ma ynaam* he eats heavily before going to sleep.

قبلين *ɋableen*: *la baʒdeen wala ɋableen* retort used as a response to *baʒdeen* (q.v.) ≈ never mind about later! *ḥa-taaxud ʃugrit-ak baʒdeen*. - *la baʒdeen wala ɋableen ʃana ʒayiz-ha dilwaɋti* 'You will get your wages later.' 'Never mind later, I want them now!' *taʒaala zur-na baʒdeen ʃiḥna mafʃuliin dilwaɋti*. - *la baʒdeen wala ɋableen ʒumr-ak ma-ḥa-tʃuf-ni ʒandak* 'Come and visit us some other time, we are busy now.' 'There won't be any other time; you'll never see me at your place!' ‖ *wi-baʒdeen*. - *wala ɋableen* 'Whatever next!' 'Don't make such a fuss - it's nothing to get excited about.'

قبل *ɋabla* /adv/ before, first. *ʃana gayya bass*[a] *ʒawza ʃafuut ʒala ʃumm-i ɋabla* I'm coming, but I want to drop by my mother's first. *kallim-u ɋabla* speak to him first!

قبليّة *ɋabliyya* = *ɋabla*.

قبلة *ɋibla* /n/ *[Isl]* **1** direction towards which Muslims face in prayer. (i.e. the direction of the Kaaba in Mecca). **2** niche in the wall of a mosque indicating the direction for praying.

قبلي *ɋibli* **1** /adj/ southern. *baab ɋibli* southern door. ‖ *ʃil-wagh il-ɋibli* Upper Egypt. **2** /prep/ to the south of, in the south of. *ʃil-madrasa ɋibli l-balad* the school is in the southern part of town. **3** /adv/ south(ward). *ʃir-riiḥ bi-thibb*[i] *min ɋibli* the wind is blowing from the south.

قبل *ɋabal*[2] = *ɋubaal*.

قبال *ɋubaal* /prep/ **1** facing, opposite. *balakonit-hum ɋubaal balakonit-na* their balcony faces ours. **2** in return for, in exchange for. *xud ik-kitaab da ɋubaal illi xadt-u minnak ʃimbaariḥ* take this book in return for the one I took from you yesterday.

قبّل *ɋabbil*[2] /vi/ to go south, go in a southern direction. - ava *miɋabbil*.

قابل *ɋaabil* /vt/ **1** to meet (s.o.) at an expected place or time. *ma-ḥadd*[i] *-ʃ ɋabil-ni fil-maṭaar* no one met me at the airport. ‖ *ʃibɋa ɋabil-ni law* ... ≈ come and have a laugh at my expense if ..., as in *ʃibɋu ɋabluu-ni law kaan fii ʒaʃa* it's a sure bet there'll be no supper! *ʃibɋa ɋabil-ni law gawwizt-a-ha* I'll eat my hat if you (manage to) marry her off! **2a** to encounter, come across. *ma-ɋabilt*[i] *-ʃ zayyak kitiir fi-ḥayaat-i* I haven't come across many like you in my lifetime. **2b** to make the acquaintance of. *ɋabilt-a-ha w-ʃana lissa ṭaalib* I met her while I was still a student. **3** to meet, welcome, greet. *ɋabluu-na muɋabla kwayyisa* they received us well. **4** to correspond with. *ʃil-fuul ʒand il-maṣriyyiin yiɋaabil il-makaroona ʒand iṭ-ṭalayna* broad beans are to the Egyptians what pasta is to the Italians. ‖ *fi-muɋaabil* in return for, as in *xadt*[i] *saʒt-u f-muɋaabil saʒt-i* I took his watch in return for mine. - *bi-duun* (or *min ɣeer) muɋaabil* without compensation, gratis. - vn *muɋabla*; ava *muɋaabil, miɋaabil*.

مقابلة *muɋabla* /n pl *-aat*/ meeting, encounter.

اتقابل *ʃitɋaabil* /vi/ **1** to meet together. *ḥa-nitɋaabil fi-bariis in faaʃ allaah* we'll get together in Paris, God willing. **2a** to encounter one another. *ʃitɋabilna fiʃ-*

ʃaariɛ we ran into each other in the street. **2b** to make one another's acquaintance. *ʃitqablu ʃayyaam il-ḥarb* they met during the war. **3** passive of *qaabil*. -ava/iva *mitqaabil*.

أقبل *ʃaqbal*↑ /vi/ to respond with enthusiasm. *gumhuur kitiir ʃaqbal ɛal-film*ⁱ the film was very popular. -vn *ʃiqbaal*; ava *muqbil*.

مقبل *muqtabal: fi-muqtabal* ... in the early stages of .... *fi-muqtabal il-ɛumr* in (one's) youth.

استقبل *ʃistaqbil* /vt/ **1** to receive. *ḥaflit istiqbaal is-safiir* the reception for the ambassador. *ʃinfataḥit il-ʃabwaab l-istiqbaal il-ɛariis* the doors were opened to receive the groom. *ʃir-radyu b-yistaqbil maḥaṭṭaat biɛiida* the radio picks up distant stations. **2** *[naut]* to anchor. *ʃistaqbilu l-markib fil-xaliig* they anchored the ship in the bay. — /vi/ **3** *[naut]* to be anchored. -vn *ʃistiqbaal*; ava *mustaqbil*; ava/pva *mistaqbil*.

¶ *ʃistaqbil il-qibla [Isl]* to face in the direction of Mecca for the purpose of ritual prayer.

استقبال *ʃistiqbaal* /n pl *-aat*/ reception lobby, reception area, reception desk.

مستقبل *mustaqbal, mustaqbil*↓ /n/ **1** future. *ʃil-mustaqbal bi-yadd illaah [prov]* the future is in God's hands, God alone knows the future. **2** (future) career. *ʃil-qumaar qayyaɛ-lu mustaqbal-u* gambling lost (him) his career, gambling ruined him.

ق ب ن

قبانة *qibaana* /n/ **1a** weighing (with a steelyard). **1b** profession of weighing (with a steelyard). **2** fee for weighing (with a steelyard).

قبّاني *qabbaani* /n pl *-yya*/ one who weighs with a steelyard. *mizaan qabbaani* a steelyard.

قبّن *qabbin* /vt/ **1** to weigh with a steelyard. — /vi/ **2** to become a professional steelyard weighing man. **3** to tip. *tuql il-buḍaaɛa xalla l-ɛarabiyya qabbinit li-wara* the weight of the goods made the cart tip backwards. *ʃil-mizaan qabbin* the scale tipped. -vn *taqbiin*; ava *miqabbin*.

اتقبّن *ʃitqabbin* /vi/ to be weighed with a steelyard. -iva *mitqabbin*.

ق ب و

قبو *qabw* /n/ vault, cellar, tunnel.

قبوة *qabwa* /n pl *-aat, qibaw*/ **1** vault, inside of a dome. **2** arcade.

قبّى *qabba*² /vt/ to make concave. -vn *taqbiyya*; ava/pva *miqabbi*.

اتقبّى *ʃitqabba* /vi/ to be made concave. -iva *mitqabbi*.

استقبّى *ʃistiqabba*↓ **1** /vt/ to make concave. **2** /vi/ to become concave. -ava/pva *mistiqabbi*.

ق ب ى see ق ب و : *qabba*², *ʃitqabba, ʃistiqabba*↓

ق ت ب

قتب *qatab* /n pl *ʃiqtaab*/ hump (on the back). *ʃabu qatab* hunchback.

قتّب *qattib* **1** /vt/ to cause to be hunched. *kaan qaaɛid miqattib ḍahr-u* he was sitting with his back hunched. **2** /vi/ to become hunched. *qattibit min kutr il-muzakra* she became hunched from so much studying. -vn *taqtiib*; ava/pva *miqattib*.

اتقتّب *ʃitqattib* /vi/ to be or become hunched or bowed. *ḍahr-u tqattib min tuql if-feela* his back was bent from the weight of the load. -also *qootab*. -ava/iva *mitqattib*.

ق ت ت¹

قتّت *qattit* /vi/ to be niggardly, be stingy. *bi-yqattit ɛala ɛyaal-u maɛa ʃinnu ɣani* although he is rich, he is stingy towards his children. -vn *taqtiit*; ava *miqattit*.

ق ت ت² see ق ت ى : *qatta, qattaaya*

ق ت ر

قتّر *qattar* /vi/ to be stingy. *ɣani wi-mqattar ḥatta ɛala rooḥ-u* he is rich but tight-fisted even toward himself. -vn *taqtiir*; ava *miqattar*.

اتقتّر *ʃitqattar* /vi/ (impersonal) passive of *qattar*. *ḥatta l-xaddamiin ṭafaṭu min kutrⁱ ma tqattar ɛaleehum* even the servants have left because they were given such stingy treatment. -iva *mitqattar*.

ق ت ل

قتل *qatal (i)* **1** /vt/ to kill, murder. *ɛawziin ḥaaga ɛaʃaan qatl il-ḥaʃaraat* we want something to kill the insects. ‖*ma-fii-ʃ ɣeer-ik ḥaddⁱ qatal-ni - win-nabi tirḥami* it's you alone who have slain me; -I implore you, have mercy! (flirtatious remark to a girl). **2** /vi/ to commit murder. *ḥabasuu ɛaʃaan qatal* he was imprisoned for murder. *qatlⁱ xaṭaʃ* or *qatlⁱ min ɣeer qaṣd [leg]* manslaughter. *qatlᵃ ɛamdⁱ maɛa sabq il-ʃiṣraar [leg]* premeditated murder. -vn *qatl*; ava *qaatil*; pva *maqtuul*.

قتلة *qatla* /n pl *-aat*/ **1** /inst n/ a killing. ‖*qatla w-fibra* type of children's marble game. **2** brawl.

قاتل *qaatilⁱ* /n pl *qatala*/ killer, murderer.

قتيل *qatiil* /n pl *qutala*/ one killed. ‖*naam zayy il-qatiil* he slept like a log. *-yiqtil il-qatiil wi-yimʃi f-ganazt-u [prov]* he murders the victim and (then) walks in his funeral procession (applied to a ruthless person).

قتّال *ʔattaal: ʔattaal ʔutala* a hardened murderer.
مقتل *maʔtal* /n pl *maʔaatil*/ mortal spot, vulnerable spot. *ʕinḍarab fi-maʔtal* he was fatally wounded.
اتقتل *ʕitʔatal* /vi/ to be killed, be murdered. -iva *mitʔitil*.
انقتل *ʕinʔatal* = *ʕitʔatal*. -iva *minʔitil*.
قتّل *ʔattil* /vt/ to kill (in numbers). *bi-yʔattilu (fi)k-kilaab is-saʕraana* they're killing off rabid dogs. -vn *taʔtiil*; ava/pva *miʔattil*.
اتقتّل *ʕitʔattil* /vi/ to be killed (in numbers). -iva *mitʔattil*.
قاتل *ʔaatil*[2] /vt/ to fight against, engage in a struggle with. *ʕammaal yiʔaatil (f)in-noom* he keeps fighting against sleep. -vn *ʔitaal, miʔatla*; ava *miʔaatil*.
قتال *ʔitaal* /n/ fight, struggle. *midaan ʔitaal* a battlefield.
مقاتلة *muqatla* /n pl *-aat*/ fighter (plane).
مقاتل *muqaatil* /n */ *[mil]* private soldier.
اتقاتل *ʕitʔaatil* /vi/ to fight, do battle. *ʕin-naas bi-yitʔatlu ʕal-biḍaaʕa* the people are fighting over the goods. - ava *mitʔaatil*.
استقتل *ʕistaʔtil* /vi/ to fight desperately. *bi-yistaʔtilu leel wi-nhaar ʕaʃaan luʔmit il-ʕeef* they strive desperately day and night for a livelihood. -vn *ʕistiʔtaal*; ava *mistaʔtil*.

ق ت م
قاتم *ʔaatim* /adj/ dark (of colour).
قتّم *ʔattim* **1** /vt/ to darken, blacken. *ʕiʃ-ʃams[i] ʔattimit wiʃʃ-u* the sun tanned his face. **2** /vi/ to become dark. *wiʃʃ-u ʔattim miz-zaʕal* his face darkened with fury. -vn *taʔtiim*; ava *miʔattim*.

ق ت ى
قتّة، قثّاء *ʔatta* /coll n/ variety of long cucumber (Cucumis sativus). ‖ *bi-yaakul fi-ʔatta maḫluula* ≈ he has an easy life.
قتّاية *ʔattaaya* /unit n, pl *-aat*/ a cucumber of the *ʔatta* variety.
مقاتة *maʔaata* /n pl *-aat*/ melon and cucumber plantation. ‖ *xayaal il-maʔaata* scarecrow.

ق ث ء see ق ت ى

ق ح ب
قحبة *ʔaḫba* /n pl *ʔaḫaayib*/ whore, harlot. *ya-bn il-ʔaḫba* son of a whore!

ق ح ح
قحّ *quḫḫ* /adj invar/ through and through, one hundred percent. *fallaaḥ quḫḫ* a peasant through and through. *ḫumaar quḫḫ* a complete idiot.

ق ح ط
قحّط *ʔaḫḫaṭ* **1** /vt/ to scrape, strip. *ʔaḫḫaṭ il-buuya min ʕaṭ-ṭarabeeza* scrape the paint off the table! *ʕil-ʔumaar ʔaḫḫaṭ-u* gambling cleaned him out, gambling made him penniless. **2** /vi/ to dry up, become parched. *zoor-i ʔaḫḫaṭ miṣ-ṣiyaam* my throat became parched from fasting. ‖ *ʕana ʔaḫḫaṭt[i] mil-filuus* I became penniless. -vn *taʔḫiiṭ*; ava/pva *miʔaḫḫaṭ*.
اتقحّط *ʕitʔaḫḫaṭ* /vi/ to be scraped, be stripped. -iva *mitʔaḫḫaṭ*.

ق ح ف
قحف *ʔaḥf* /n pl *ʔuḥuuf, ʔuḥúfa*/ **1** broad part of a palm branch (where it joins the trunk). **2** (strong) brute.

ق د
قد *qad*[↑] /adj/ **1** (also *laqad*) /w foll perf v/ already. **2** /w foll imperf v/ perhaps.

ق د ح [1]
قدح *ʔadaḥ*[1] *(a)* /vt/ **1** to heat to the required temperature. *ʔadaḥit il-furn* she heated the oven to baking temperature. *laazim tiʔdaḥi s-samn* you must heat the clarified butter to smoking point (i.e. ready for frying). **2** to strike (a light) with flint or steel. ‖ *ʔadaḥ-ni ʔalam* he gave me a slap (that made the sparks fly). **3** to throw, cast. — /vi/ **4** to reach the required temperature. *ʕil-furn[i] ʔadaḥ* the oven is hot and ready for baking. -vn *ʔadḥ, ʔadaḥaan, ʔadiiḥ*; ava *ʔaadiḥ*; pva *maʔduuḥ*.
قدحة *ʔadḥa* /inst n, pl *-aat*/ **1** a heating. **2** (physical) affliction. *ʔat-(ak) ʔadḥa f-gittit-(ak) [abus]* may (your) body be afflicted!
أقدح *ʕaʔdaḥ* /el/ more/most striking. *ḫiyya ʕaʔdaḥ min ʕuxt-a-ha fig-gamaal* she's more strikingly beautiful than her sister.
اتقدح *ʕitʔadaḥ* /vi/ to be or become heated to the required temperature. *ʕiz-zeet itʔadaḥ* the oil has reached smoking point (i.e. it is ready for frying). -ava/iva *mitʔidiḥ*.
انقدح *ʕinʔadaḥ* = *ʕitʔadaḥ*. -ava/iva *minʔidiḥ*.

ق د ح [2]
قدح *ʔadaḥ*[2] /n pl *ʕaʔdaaḥ, ʔidaaḥ*/ dry measure equal to 2.062 litres. *ma-yiksar-ʃ iṭ-ṭaḥuuna illa ʕabu ʔadaḥ [prov]* (it's the man with only a small quantity to grind who breaks the mill) poverty and bad luck go hand in hand.

ق د د [1]

قدّ *qadd[1] (u)* /vt/ to split. *ḍarab-u ḍarba qadd-u nuṣṣeen* he gave it a blow and split it in two. - vn *qadd, qadadaan*; ava *qaadid*; pva *maqduud*.

قدّ *qadd[2]* /n/ **1** size. *ya reet-u ɛala qadd-i* I wish it were my size. *qaadir yifiil ʕarbaɛa qadd-i* he can carry four people the size of me. **2** extent, amount. *ḥa-tviib qadd[i] ʕeeh* how long will you be away? *qadd[i] kida* this much (big, long etc.). *qiwwit ig-geeʃ ɛala qadd[i] ʕimaan iʃ-ʃaɛb* the power of the army is commensurate with the faith of the people. *qadd[i] ʕeeh is-sitt[i] di gamiila* how beautiful that woman is! *qadd[i] baɛḍ[i] fil-irtifaaɛ* of equal height. ‖*miʃ qadd[i] kida* not good, pretty bad, as in *riḥit-ha miʃ qadd[i] kida* she doesn't smell very nice. - *qadd id-dinya* a world's worth, as in *b-aḥibb-u qadd id-dinya* I love him enormously! *ɛandik fasatiin qadd id-dinya* you have masses of dresses! *taagir qadd id-dinya* a thriving merchant, *raagil qadd id-dinya* a man of inestimable worth, a superior man. **3** calibre, capacity. *ʕinta miʃ qadd-i* you're no match for me. *huwwa-nta qadd-i-na* do you really imagine you're in the same league as us? ‖ *ʕana muʃ qadd il-fustaan* I can't afford the dress. - *ɛala qadd-(u)* of little worth or capacity, as in *xaṭṭaaṭ ɛala qadd-u* a mediocre calligrapher, *naẓar-u ɛala qadd-u* his vision is limited, *maṣruuf-u ɛala qadd-u* he has little to spend, *ɛaql-u ɛala qadd-u* he's not very bright, *kalaam-u ɛala qadd-u* he speaks naively, *raagil ɛala qadd-u* or *raagil ɛala qadd[i] ḥaal-u* a poor man. ¶ *(ɛala) qadd[i] ma* /conj/ (1) as much as. *bi-yidfaɛ ɛala qadd[i] ma yiqdar* he pays what he can. *qumaaʃ qadd[i] ma yiɛmil qamiiṣ* enough material to make a shirt. (2) however much. *ɛala qadd[i] ma ʕasallim ɛalee bardu miʃ ɛaawiz yiɛabbar-ni* however often I greet him he still doesn't want to pay me any attention.

قدّة *qadda* /n pl *-aat*/ **1** instance noun of *qadd*. **2** strip of material used in appliqué designs (see Pl.H, 15).

قدّة *qidda* /n pl *-aat, qidad*/ levelling board (for mortar).

قدود *quduud: qadd[i]* (or *qadd-...*) *wi-quduud* the match of ... and more. *da-na qadd-ak wi-quduud* I'm your equal and more!

اتقدّ *ʕitqadd* /vi/ to be split. - iva *mitqadd*.

انقدّ *ʕinqadd* = *ʕitqadd*. - iva *minqadd*.

ق د د [2]

قدّد *qaddid* **1** /vt/ to dry by heat. *xud il-ɛeeʃ qaddid-u* take the bread and dry it. **2** /vi/ to dry up. ‖*mara mqaddida* a skinny woman. - vn *taqdiid*; ava/pva *miqaddid*.

اتقدّد *ʕitqaddid* /vi/ to be dried by heat. - iva *mitqaddid*.

ق د ر [1]

قدر *qidir (a)* /vi/ **1** /preverb/ to be able to, be capable of. *ma-qdirnaa-ʃ niigi* we were unable to come. *tiqdar tiqul-li gara-lhum ʕeeh* can you tell me what happened to them? *ḥadd[i] ʃiina yiqdar yiftaḥ ḥanak-u* is anyone of us in a position to speak out? **2a** to be master, be in command. *ma-yiqdar ɛala l-qudra ʕilla rabb-i-na [prov]* ≈ only God can do the impossible. *ma-yiqdar-ʃ[i] ɛaleeha ʕayy[i] ḥadd* nobody could do it. *da b-yiqdar ɛala k-kalaam bass* he's a man of words, not action. ‖*ma-qdir-ʃ[i] ɛala l-ḥumaar ʕiffaṭṭar ɛal-bardaɛa [prov]* he couldn't master the donkey so he took it out on the saddle. **2b** to bear, be able to bear. *m-aqdar-ʃ[i] ɛala zaɛal-u* I can't bear his being cross! *tiqdar ɛal-wagaɛ* can you stand the pain? - vn *qudra, qadaara*; ava *qaadir*; pva *maqduur*.

قدارة *qadaara* /n/ impertinence, cheek. *ya qadart-ak* how cheeky you are!

قادر *qaadir* **1** /ava/ ‖*rabb-i-na qaadir ɛala kull[i] ʃeeʕ* ≈ anything is possible in God's creation! **2** /n/ Almighty One, Omnipotent One (epithet of God). ‖*bi-qudrit qaadir* ≈ for no rhyme or reason. - *ʃaayil ɛabd il-qaadir* ≈ he looks as though he's carrying the troubles of the whole world on his shoulders. — /adj */ **3** cheeky. **4** wealthy, of means. *ʕilli yitgawwiz itneen ya qaadir ya faagir [prov]* the man who marries two wives is either rich or debauched!

القادريّة *ʕil-qadriyya* /prop n/ Sufi order founded by Abd el-Qadir el-Gilani.

مقدور *maqduur* **1** /pva/ ‖*maqduur ɛala* manageable, as in *da ḥaaga maqduur ɛaleeha* this is something that can be managed. — /n/ **2** capacity, ability. *kull[i] waaḥid wi-maqduur-u* each according to his means. *fi-maqduur ...* within the capacity of, as in *fi-maqduur-u yaakul toor li-waḥd-u* he's capable of eating an ox on his own. **3** *ʕil-maqduur* what is fated, what is destined.

المقادير *ʕil-maqadiir, ʕil-maqadiir* /pl n/ Fate, the Fates. *qaliil it-tadbiir yiḥiil ɛala l-maqadiir [prov]* the disorganised man leaves matters to Fate.

قدر *qadr* /n/ **1** worth. *qadr-ak maḥfuuẓ* your worth is maintained. ‖*bi-galaalit qadr-... [deris]* ≈ in all (one's) shining glory, as in *huwwa lamma yiigi b-galaalit qadr-u ḥa-yxawwif-na* ≈ does his lordship imagine he'll scare us when he arrives? **2**: *leelit il-qadr [Isl]* a night in Ramadan on which, it is believed, a light *(ṭaaqit il-qadr)* appears to a chosen few, who thereby acquire fulfilment of a wish. *ṭaaqit il-qadr infataḥit-lak* ≈ the world is at your feet, you have a bright future!

قدرة *qudra* /n pl *-aat*/ capacity, capability. *ɛandaha*

ʔudra timʃi masafaat ʧiwiila she is capable of walking long distances. *ɛala ḥasab ʔudrit-ha lil-ḥarb* according to its fighting capacity. *bi-ʔudrit illaah* by the power of God.

قدر *ʔadar, ʔadar* /n pl *ʃaʔdaar, ʃaʔdaar*/ Fate, Destiny. ‖*saaɛit il-ʔadar yiɛma l-baṣar [prov]* (when it is time for Fate to be realized), (one's) sight is blinded) no amount of wisdom can help one escape one's fate.

قدير *ʔadiir, ʔadiir*↑ **1** /n/ Almighty One, Omnipotent One (epithet of God). **2** /adj/ having mastery, capable.

مقدرة *maʔdira, maʔdara* /n/ financial capability. *ma-ɛanduu-ʃ maʔdara yiʃtiri laḥma* he can't afford to buy meat.

مقدار *muʔdaar, miʔdaar* /n/ **1** /pl *maʔadiir*/ quantity, amount. *bi-yistahlik miʔdaar kibiir min il-banziin* it consumes a large quantity of petrol. *yikuun biɛiid ɛan il-ʃarḍ*[i] *b-muʔdaar xamastaaʃar santi* it is fifteen centimetres above ground. **2** /no pl/ worth, value. *yiɛizz*[i] *muʔdaar-ak [women in trad soc]* response to *xaṭwa ɛaziiza* (q.v.) ≈ may your worth be increased.

اتقدر *ʃitʔadar* /vi/ (impersonal) passive of *ʔadar* 2. *kull-u yitʔidir ɛalee ʃilla l-ɛaṭaʃ* everything is bearable except thirst. -iva *mitʔidir*.

انقدر *ʃinʔadar* = *ʃitʔadar*. -iva *minʔidir*.

قدّر *ʔaddar* /vt/ **1** to (pre)destine (of God). *kull-u mʔaddar* everything is fore-ordained. ‖*ʔaddar wi-laṭaf* ≈ it could have been worse. **2** to enable (of God). *rabb-i-na bi-yʔaddar-na ɛaʃ-ʃuɣl* God enables us to do our work. *rabb-i-na yʔaddar-ni ɛala xidmit-ak* may God enable me to serve you (deferential expression of one's willingness to be of service). **3a** to appraise, estimate. *ʃawarrii-k il-ɛarabiyya wi-nta tʔaddar it-taman* I'll show you the car and you make an estimate of the price. *ʔaddart*[i] *ʃinnu mumkin yikuun zaɛlaan min il-ḥikaaya di* I reckoned he might be upset by this matter. **3b** to appreciate, esteem. *fii zabaayin bi-tʔaddar il-ḥaaga l-ḥilwa* there are customers who appreciate nice things. *ma-bi-yʔaddar-nii-ʃ* he doesn't value me (as he should). -vn *taʔdiir*; ava/pva *miʔaddar*; pva *muʔaddar*.

¶ *ʔaddar ʃinn* ... suppose that ..., what if ..., as in *ʔaddar ʃinn*[i] *naas ḥaramiyya ʧilɛu ɛalee* what if thieves had attacked him? *ʔaddari ʃinn*[i] *ma-lkii-ʃ ʃixwaat* suppose that you didn't have any brothers or sisters.

تقدير *taʔdiir* /n pl *-aat*/ **1** appraisal, estimate. *ɛala ʃaʔall*[i] *taʔdiir* at lowest estimate. **2** *[acad]* grading, ranking (of achievement). *xadt*[i] *taʔdiir gayyid fil-imtiḥaan* I got a ranking of Good in the exam.

تقديرى *taʔdiiri* /adj/ **1** pertaining to individual estimations, relative. *masaaʃil taʔdiriyya* matters of (personal) judgement. **2** approximate. *ʃasɛaar taʔdiriyya* approximate prices.

مقدّر *miʔaddar, muʔaddar* /n pl *-aat*/ destiny.

اتقدّر *ʃitʔaddar* /vi/ **1** to be appraised, be estimated. *farḥit-i biiku ma-titʔaddar-ʃ* my joy in you cannot be estimated. **2** to be appreciated, be esteemed. -iva *mitʔaddar*.

مقتدر *muʔtadir* **1** /adj */ financially capable. *ʃinta muʔtadir wi-tiʔdar tifaṣṣal badla* you can well afford to have a suit of clothes made. **2** (also *muqtadir*) /n/ Omnipotent One (epithet of God).

ق د ر [2]

قدرة *ʔidra* /pl *ʔidar*/ urn-shaped metal or earthenware vessel (see **Pl.A, 5**).

ق د س [1]

قدس *ʔuds, quds* /n/ *[Chr]* holiness. *ʔuds il-ʃiʔdaas* or *ʔuds il-ʃaʔdaas* or *quds il-ʃaʔdaas* the holy of holies. ‖*ʔuds-ak* form of address to Coptic clergy. -*ʔuds abuuna* formal term of address or reference to a Coptic priest.

القدس *ʃil-ʔuds, ʃil-quds* /prop n/ Jerusalem.

قدسى *ʔudsi, qudsi* /adj/ *[Isl]* sacred, divine (especially of Muslim tradition in which God himself speaks).

قدسيّة *ʔudsiyya*↑ /n/ holiness, sacredness. *ʔudsiyyit il-makaan* the holiness of the place.

قدس *ʔudus* or *ʔudus: ʃir-rooḥ il-ʔudus [Chr]* the Holy Spirit.

أقدس *ʔaqdas* /el/ more/most holy.

قداسة *ʔadaasa* /n/ holiness. *ʔadaasit il-baaba* His Holiness the Pope. *ṣaaḥib il-ʔadaasa* His Holiness.

قدّاس *ʔuddaas* /n pl *ʔadadiis, ʔuddasaat*/ *[Chr]* liturgy of the Mass, eucharistic liturgy.

قدّوس *ʔudduus* /n/ Most Holy One (epithet of God).

قدّيس *ʔaddiis, ʔiddiis, qiddiis* /n */ Christian saint.

أقداس *ʃiʔdaas, ʃaʔdaas, ʃaqdaas* see *ʔuds*.

قدّس *ʔaddis* /vi/ **1** *[Chr]* to make a pilgrimage to Jerusalem. **2** *[Chr]* to celebrate Mass, celebrate the Eucharist (of a priest). — /vt/ **3** to sanctify, bless. **4** to hold sacred, venerate. *bi-yʔaddis il-ḥayaah iz-zawgiyya* he holds married life sacred. -vn *taʔdiis*; ava *miʔaddis*; pva *muʔaddas*.

مقدّس *miʔaddis* /n */ a Christian who has made a pilgrimage to Jerusalem.

مقدّس *muʔaddas* or *muqaddas*↑ /adj */ holy. *ʃil-ɛeela l-muʔaddasa* the Holy Family. *ʃik-kitaab il-muʔaddas* (or *il-muqaddas*) the Holy Bible. *ʃil-ʃarḍ il-muqaddasa* the Holy Land, Palestine.

اتقدّس ʔitqaddis /vi/ passive of *qaddis* 3 and 4. -iva *mitqaddis*.

[2] ق د س see ق د و س : *qaduus*

[1] ق د ف

قدف *qadaf[1] (i)* /vt/ to make (a stroke) in rowing. *qadaf qadfiteen wil-miqdaaf itkasar* he rowed two strokes and the oar broke. -vn *qadf*; ava *qaadif*.

قدفة *qadfa[1]* /inst n, pl *-aat*/ a stroke (in rowing).

مقداف *miqdaaf, muqdaaf* /n pl *maqadiif*/ oar. -also *migdaaf, mugdaaf*.

اتقدف ʔitqadaf[1] /vi/ to be rowed (of strokes). -iva *mitqidif*.

انقدف ʔinqadaf[1] = ʔitqadaf[1]. -iva *minqidif*.

قدّف *qaddif[1]* /vi/ to row. -vn *taqdiif*; ava *miqaddif*.

اتقدّف ʔitqaddif[1] /vi/ to be rowed, be propelled by oars (of a boat). -iva *mitqaddif*.

[2] ق د ف

قذف *qadaf[2] (i)* /vt/ to aim at, or strike by throwing. *qadaf-ha b-ħagar* he threw a stone at her. -vn *qadf, qadafaan*; ava *qaadif*; pva *maqduuf*.

قذف *qazaf (i)* /vt/ **1** to bombard. *qazf[i] bil-qanaabil* bombing. **2** to libel, defame. — /vi/ **3** to ejaculate, eject semen. -vn *qazf*; ava *qaazif*; pva *maqzuuf*.

قذفة *qadfa[2]* /inst n, pl *-aat*/ a throw.

قاذفة *qaazifa* /n pl *-aat*/ ejector. *qaazifit qanaabil* bomber. *qaazifit lahab* flame-thrower.

مقذوف *maqzuuf* /n pl *maqaziif*/ bullet.

قذيفة *qaziifa* /n pl *qaẓaayif*/ shell, bomb. *qaziifa yadawiyya* hand-grenade.

اتقذف ʔitqadaf[2] /vi/ passive of *qadaf[2]*. -iva *mitqidif*.

انقذف ʔinqadaf[2] = ʔitqadaf[2]. -iva *mitqidif*.

قذّف *qaddif[2]* /vt/ to pelt. *qaʕad yiqaddif-ni* (or *yiqaddif fiyya) b-ħigaara* he kept pelting me with stones. -vn *taqdiif*; ava/pva *miqaddif*.

اتقذّف ʔitqaddif[2] /vi/ to be pelted. -iva *mitqaddif*.

[1] ق د م

قدم *qidim, qudum (a)* /vi/ to become old. *lamma l-ʕarabiyya tiqdam* when the car gets old. *ʔin-nukta di qidmit* that has become an old joke. -vn *qudumiyya, qidam, qadamaan*.

قدميّة *qudumiyya* /n/ oldness, age.

قديم *qadiim, qadiim* /adj pl *qudaam, qudama, qudamaaʔ*/ old, ancient. *min qadiim iz-zamaan* from ancient times. *qudamaaʔ il-maṣriyyiin* the ancient Egyptians. ‖*gibna qadiima* sharp aged white cheese. -*ʔil-qadiima tiħla wa-law kaanit waħla [prov]* (the first wife is sweet even if she's a clod) ≈ the old shoe is more comfortable than the new. -*gaab il-qadiim ʒag-gidiid* to dredge up the past. -*qadiim fil-mihna* or *qadiim fiṣ-ṣanʕa* or *qadiim fik-kaar* experienced, of mature skill(s). -*maṣr il-qadiima* Old Cairo, the southernmost district of Cairo proper, situated on the eastern bank of the Nile at the site of the fortress and settlement conquered by the Arabs in 641.

أقدم ʔaqdam /el/ older/oldest.

أقدميّة ʔaqdamiyya /n pl *-aat*/ seniority.

استقدم ʔistaqdim /vt/ **1** to reject as (too) old. **2** to select for oldness. -vn *ʔistiqdaam*; ava *mistaqdim*.

[2] ق د م

قدم *qadam, qadam* /fem n, pl ʔaqdaam/ **1** foot. ‖*qadam-ak xeer ʕalayya* ≈ your arrival has brought me good fortune. -*ʔaqdaam wi-ʔaʕtaab (wi-nawaaṣi)* (feet and thresholds (and corners)) all a matter of luck, a toss-up. *ʔin-naas ʔaqdaam wi-ʔaʕtaab [prov]* some people bring good luck, some bring bad. **2** foot (linear measurement).

قدمة *qadama* /n pl *-aat*/ *[geom]* vernier caliper.

قدوم *quduum* /n/ coming, arrival. *quduum-ak xeer* (we consider) your arrival to be a good omen. *ṭawaaf il-quduum [Isl]* the greeting of the Kaaba (by circuiting it) on arrival in Mecca.

قدّام *quddaam* **1** /prep/ in front of. *ʔilli quddaamu fiṭ-ṭabuur* the one ahead of him in the queue. *quddaam ʕenee* before his very eyes. ‖*ʔilli waraa wi-lli quddaamu* all his worldly goods. **2** /adv/ in front. *ʕarabiyya fiiha mutoor quddaam* a car which has the motor in front. *fiḍil yimfi l-quddaam* he continued moving forward. ‖*quddaami* in front of me ≈ get moving! get going!

قدّامانى *quddamaani* /adj */ front, frontal, foremost. *ʕagal quddamaani* front wheel. *misik kitf il-quddamaniyya* he grasped the shoulder of the girl (or woman) ahead of him.

قيدومة *qayduuma* /n/ *[naut]* prow.

مقدم *muqdim* /adj * and pl *maqaadim*/ smart-alecky.

قدّم *qaddim* /vt/ **1** to cause to advance, cause to move forward. *qaddimu maʕaad safar-hum* they moved up the date of their journey. **2a** to present, introduce. *kaatib il-muḥaami bi-yqaddim id-daʕwa lil-maḥkama* the lawyer's clerk presents the case to the court. *qaddim musawwaṛaat taʕyiin-u* he presented his credentials. **3a** to offer. *qaddim-lina ʃaay* he offered us tea. *mustaʕidd[i] yqaddim ḥayaat-u l-maṣr* he's prepared to offer his life for Egypt. **3b** to hand over, deliver. *qaddim il-filuus* he handed over the money. — /vi/ **4** to advance, move forward. *saʕt-i bi-tqaddim* my watch

gains time. *ramaḍaan kull*^{i} *sana bi-yqaddim ḫawaali ḥdaaʃar yoom ɛan is-sana lli qabliiha* Ramadan comes about eleven days earlier every year. **5** to make haste. *qaddim - ʃiḫna mitʃaxxariin* hurry up! we're late! **6** to apply, make application. *miʃ kull*^{i} *waaḥid yiqdar yiqaddim fil-ʃazhar* not everyone can apply to el-Azhar. - vn *taqdiim*; ava/pva *miqaddim*.

مقدّمة *muqaddima, muqaddima*↑ /n pl *-aat*/ **1** forefront, vanguard. *muqaddimit ig-geeʃ* the vanguard of the army. **2** introduction. *bi-duun muqaddimaat nizil fiina ʃtiima* ≈ without any warning he showered us with insults.

مقدّم *muqaddam* /n/ **1a** down payment, advance payment, initial payment of a larger sum which is due. **1b** part of the marriage settlement paid to the bride at the time of marriage. **2** front part, forepart. *muqaddam il-markib huwwa l-biriwwa* the forepart of the ship is the bow.

¶ *muqaddaman* /adv/ in advance, beforehand. *ʃid-dafɛ*^{i} *muqaddaman* payment in advance. ‖*naɛiiman muqaddaman* complimentary remark made during the cutting of hair or during shaving ≈ may it make you feel good!

مقدّم *muqaddim, muqaddam* /n */ lieutenant-colonel.

اتقدّم *ʃitqaddim* /vi/ **1** passive of *qaddim*. **2** to progress, make progress. *ʃil-balad itqaddimit qawi* the country has made great progress. *ʃitqaddim fiṭ-ṭabuur* he moved up in the queue. **3** to present oneself, submit oneself. *kull*^{i} *sana iṭ-ṭaalib b-yitqaddim lil-imtiḥaan* every year the student presents himself for examination. *ʃitqaddim-li ktiir rafaḍt-u-hum kull-u-hum* many (suitors) have presented themselves to me, (but) I've refused them all. - vn *taqaddum*; ava/pva *mitqaddim*.

متقدّم *mitqaddim* /n */ applicant.

ق د م^{3} see ق د و م: *qaduum*

ق د و س

قادوس *qaduus* /n pl *qawadiis*/ **1** large funnel or cone which receives material for processing. *qaduus (iṭ-ṭaḥuuna)* (mill) hopper. **2** jar of a water-wheel (see Pl.E. 11). **3** bell-shaped pigeon-hole.

ق د و م

قدوم *qaduum* /n pl *qawadiim*/ mason's adze, hammer.

ق ز ر see ق ذ ر

ق د ف see ق ذ ف

ق ر ا ط

قيراط *qiraaṭ* /n pl *qarariiṭ*/ **1** approximate measure equal to a finger's width, about an inch. **2** dry measure equal to 0.064 litres. **3** square measure equal to 175.035 square metres. ‖*qiraaṭ baxt*^{i} *wala faddaan faṭaara [prov]* ≈ better an inch of luck than a mile of cleverness. **4** carat, a unit of weight equal to 0.195 grammes. *ʃarbaɛa w-ɛiʃriin qiraaṭ* (twenty-four carat) expression indicating superlativeness ≈ top-notch, one hundred percent, as in *kunt*^{i} *mabsuuṭ ʃarbaɛa w-ɛiʃriin qiraaṭ* I was totally happy.

ق ر ا ف

قرافة *qaraafa* /n pl *-aat*/ cemetery. *ʃil-qaraafa* large Muslim cemetery on the eastern edge of Cairo at the foot of the Muqattam hills, the site of many tombs of historical and artistic importance.

ق ر ء see ق ر ى^{1}

ق ر ب^{1}

قرب *qurub, qirib (a)* /vi/ **1** to become near. *qurb-ik naar* your nearness is (like) fire. *maṣr*^{i} *qurbit* (Cairo has become near) we're almost at Cairo. **2** /imperf only/ to be a kinsman, be a relative. *huwwa yiqrab-li* he's a relative of mine. *bi-yiqrab-lak ʃeeh* how is he related to you? - vn *qurb, qaraaba*.

قرابة *qaraaba* **1** /vn/ *fii ṣilat qaraaba benhum* there is a bond of kinship between them. **2** /coll n, pl-*aat*/ kindred, relatives. *mif ḫa-yiɛrafuu-na - dool qarabaat biɛiida* they won't recognize us - they're distant relatives.

قرب *qurb* /prep/ **1** near, near to. *qaɛdiin qurb*^{i} *baɛḍ* they are sitting near each other. *saakin qurb*^{i} *min il-maktab* he lives near the office. **2** about. *qurb*^{i} *saaɛa* almost an hour, nearly an hour.

قربان *qurbaan* /n/ *[Chr]* **1** /coll n/ small round loaves impressed with a stamp, either consecrated as communion bread or distributed among the congregation after the eucharistic liturgy. **2** /pl *qarabiin*/ offering.

قربانة *qurbaana* /n pl *-aat*/ unit noun of *qurbaan* **1**.

قرابنى *qarabni* /n pl *-yya*/ *[Chr]* baker of *qurbaan*.

قريب *qariib* **1** /n pl *qaraayib*/ relative, kinsman. **2** = *qurayyib*. *fil-qariib il-ɛaagil* in the immediate future. *kull*^{i} *ʃaatin qariib [prov]* everything (destined) to come is (relatively) imminent. *ʃid-duxxaan il-qariib yiɛmi [prov]* ≈ you can't see the wood for the trees.

قريبا *qariiban*↑ /adv/ soon, shortly.

قريّب *qurayyib* **1** /adj */ **1a** near, nearby. *ʃil-bilaad il-qurayyiba* the nearby towns. ‖*ʃil-biḍaaɛa qrayyiba* the

goods are available. - *riḍaa qurayyib* he's easy to please. - *miḥna qrayyiba* an easily-acquired skill. **1b** recent. *li-ɤaayit mudda qrayyiba* until recently. **2** /adv/ **2a** near, nearby. *saakin qurayyib* he lives nearby. **2b** soon. *ḥa-tiigi qrayyib* she'll be coming soon.

أقرب *ʕaqrab* /el/ **1** nearer/nearest. **2** sooner/soonest.

قرّب *qarrab* /vi/ **1** to come near. *qarrabna ɛal-beet* we approached the house. *qarrab ɛalayya* he drew near to me. **2** /preverb/ to reach the point of (doing s.th.). *kaan qarrab yiṭallaq-ha* he almost divorced her. *kaanit qarrabit timuut* she came close to dying. *li-ɤaayit ma tqarrab tinfaf* until it has almost dried out. — /vt/ **3** to cause to come near. *qarrab-li l-mikrifoon* move the mike close to me! - vn *taqriib*; ava *miqarrab*.

تقريب *taqriib* ‖*ɛala wagh it-taqriib* and *bit-taqriib* approximately.

¶ *taqriiban* /adv/ approximately. *ʕil-yoom taqriiban xiliṣ* the day is almost over.

تقريبى *taqriibi* /adj */ approximate. *ʕarqaam taqribiyya* approximate numbers.

مقرّب *muqarrab, muqarrabˆ* /n */ close companion, favourite. *w-aadi waaḥid mil-muqarrabiin li-galalt-u* here's one of His Majesty's favourites.

اتقرّب *ʕitqarrab* /vi/ **1** to become close or closer (in a relationship). *qaɛad yitqarrab laha li-ḥadd[i] ma ridyit tiggawwiz-u* he went on cultivating his relationship with her until she agreed to marry him. **2** to be brought near. *ʕil-ʕakl itqarrab mil-kalb* the food was brought close to the dog. - vn *taqarrub*; ava/iva *mitqarrab*.

قارب *qaarib[1]* /vt/ to become close to, approximate. *ʕiḥna bi-nqaarib baɛḍ[i] fis-sinn* we're close to each other in age. - vn *miqarba*; ava *miqaarib*.

اتقارب *ʕitqaarib* /vi/ to become close to one another, approximate one another. *humma mitqarbiin fiṭ-ṭuul* they're close to each other in height. - ava *mitqaarib*.

استقرب *ʕistaqrab* /vt/ **1** to consider close. *ʕistaqrabt il-masaafa wi-miʃiit ɛala riglay-ya* I thought it a short distance so I walked. **2a** to render shorter. *ʕistaqrabna s-sikka ɛan ṭariiq ig-gaamiɛ* we took a short cut by way of the mosque. **2b** to render sooner. *ʕistaqrab il-maɛaad* he moved up the appointment. - vn *ʕistiqraab*; ava *mistaqrab*.

[2] (ق ر ب)

قربة *qirba* /n pl *qirab*/ **1a** water-skin. ‖*bi-yunfux fi-qirba maqṭuuɛa* (he puffs on a torn water-skin) ≈ he's flogging a dead horse. **1b** hot-water bottle. **2** (set of) bagpipes. *musiiqa l-qirab* bagpipe music.

قارب *qaarib[2]* /n pl *qawaarib*/ **1** rowing boat. **2a** oval-shaped platter. **2b** sauce-boat.

ق ر ب ز

قرابيز *qarabiiz, qarabiiz* (also *qarbuuz*): *fi-qarabiiz-, fi-qarabiiz-* (also *fi-qarbuuz*) in the area of the responsibility of, in the lap of. *ḥaṭṭeet il-ḥikaaya f-qarabiiz-u* I dumped the matter into his lap, I left the matter up to him. *wiqiɛ fi-qarbuuz-i* it devolved upon me.

ق ر ب ط

قربط *qarbaṭ* /vi/ to limit one's spending, cut down on one's expenses. *qarbaṭt[a] ɛala nafs-i fis-sagaayir* I cut down on what I spent on cigarettes. - also *qarmaṭ*. - vn *qarbaṭa*; ava *miqarbaṭ*.

اتقربط *ʕitqarbaṭ* /vi/ (impersonal) passive of *qarbaṭ*. *kaan bi-yitqarbaṭ ɛaleehum wi-humma ṣɤayyariin* when they were young, they were kept short of money. - vn *tiqarbiiṭ*; iva *mitqarbaṭ*.

ق ر ب ع

قربع *qarbaɛ* /vt/ to gulp down. *b-aqarbaɛ fingaan qahwa qabl[i] m-aruuḥ iʃ-ʃuɤl* I gulp down a cup of coffee before going to work. - vn *qarbaɛa*; ava *miqarbaɛ*.

اتقربع *ʕitqarbaɛ* /vi/ to be gulped down. - iva *mitqarbaɛ*.

ق ر ج غ –

قارجغار *qargaɤaar* <T *karcığar*> /n/ *[mus]* mode in Arabic music beginning on D and having E half flat and A flat (see also *ʃuuri*).

ق ر ج و ز

قراجوز، أراجوز *qaragooz* <T *karagōz*> /n/ puppet show similar to Punch and Judy.

[1] ق ر ح

قرح *qaraḥ[1], qaraḥ (a)* /vt/ to upset, hurt (s.o.). *yaama qalb-a-ha kaan maqruuḥ mil-ɤiira* how much her heart was wounded by jealousy. *ya qarḥit-hum minha* how upset they are by her! - vn *qarḥ, qarḥ, qarḥa, qarḥa*; ava *qaariḥ*; pva *maqruuḥ, maqruuḥ*.

قرح *qaraḥ[2] (a)* /vi/ to become shameless, hardened or tough. - vn *qarḥ, quruḥiyya*; ava *qaariḥ*.

قرح *qurḥ* /n/ shamelessness, insensibility to disgrace. *ʕil-qurḥ[i] bi-yṭull[i] min ɛenee-ha* ≈ she has a brazen look.

قرحة *qurḥa, qurḥa* /n pl *quraḥ, quraḥ*/ ulcer, sore.

قرح *qiriḥ* /adj * and pl *quraḥa*/ bold, hardened, shameless. *kaddaab wi-qiriḥ* a shameless liar.

قروحيّة *quruḥiyya = qurḥ. di quruḥiyyit ɛeen minnu* this is shameless behaviour on his part!

اتقرح *ʕitqaraḥ, ʕitqaraḥ* /vi/ to be made or become

upset, be or become hurt. -ava/iva *mitqiriḥ*.

انقرح *ʔinqaraḥ, ʔinqaraḥ* = *ʔitqaraḥ*. -**ava/iva** *minqiriḥ*.

قرّح *qarraḥ, qarraḥ* **1** /vt/ to make sore. *ʔil-ḥuzn*[i] *qarraḥ qalb-a-ha* ≈ sadness made her heart heavy. – /vi/ **2** to become sore. *fafayf-u qarraḥit mil-bard* his lips became sore from the cold. **3a** to become fixed or ingrained. *ʔil-wasaaxa mqarraḥa fil-libs* the dirt is ingrained in the clothing. *ʔil-kidb*[i] *mqarraḥ fii* lying is ingrained in him, he's an inveterate liar. **3b** to become seasoned, hardened, or well-tried. -vn ***taqriiḥ***; **ava/pva** *miqarraḥ, miqarraḥ*.

اتقرّح *ʔitqarraḥ, ʔitqarraḥ* /vi/ to be made sore. -iva *mitqarraḥ, mitqarraḥ*.

ق ر ح [2]

قريحة *qariiḥa: bil-qariiḥa* intuitively. *qidirt afham il-mawquuʕ bil-qariiḥa* I was able to **understand the** subject intuitively.

اقترح *ʔiqtaraḥ* /vt/ to propose, suggest. *bi-tiqtiriḥ ʔeeh* what do you propose? -vn *ʔiqtiraaḥ*; ava *miqtiriḥ, miqtiriḥ*; pva *muqtaraḥ*.

اقتراح *ʔiqtiraaḥ* /n pl *-aat, -aat*/ **suggestion, proposition**, proposal.

مقترحات *muqtaraḥaat* /pl n/ suggestions, **propositions**, proposals.

ق ر د [1]

قردخانة *qardaxaana* (also *qardaɣaana*) /n pl *-aat*/ **noise**, uproar. *ʕamal qardaxaana* he made a big **hullabaloo**, he raised pandemonium.

قرد *qird* /n pl *quruud*/ baboon, ape. *ʔil-qird*[i] *f-ʕeen ʔumm-u ɣazaal [prov]* ≈ love is blind.

قرداتي *quradaati* /n pl *-yya*/ street entertainer **who performs** with a baboon or monkey.

قرّد *qarrad* /vi/ to be responsible for monkey-like **people** (usually children). *ʔiḥna l-mudarrisiin baqa qaʕdiin niqarrad ṭuul in-nahaar* we teachers, now, are training monkeys all day long! *ʔatgawwiz bint*[i] *ʕumr-a-ha nuṣṣ*[i] *ʕumr-i - huwwa-na ḥ-aqarrad baqa* marry a girl half my age? do you think I have the patience to **humour** and play with kids! -vn *taqriid*; ava *miqarrad*.

ق ر د [2]

قراد *quraad* /coll n/ tick(s).

قرادة *quraada* /unit n, pl *-aat*/ a tick.

ق ر د ح

قرديحى *qurdeeḥi* /adj invar/ of poor quality, **second-rate**. *mubilya qurdeeḥi* cheap shabby furniture. *ʔakl*[i] *qurdeeḥi* miserable food (without meat).

– ق ر د غ see [1] ق ر د : *qardaɣaana*

ق ر د ن

قردان *qirdaan: ʔabu qirdaan* white egret, cattle egret. ‖*zayy*[i] *ʔabu qirdaan haayif wi-nqiif* ≈ meticulous and tidy but simple-minded.

قردن *qardin* /vi/ to become thin (like an egret). *ma-lha qardinit kida* what's happened to make her lose weight like this? -vn *qardana*; ava *miqardin*.

ق ر ر [1]

قرّ *qarr*[i], *qarr (i)* /vi/ to confess, come out with the truth. *min qarr*[i] *b-zamb-u ɣafar-lu rabb-u [prov]* God forgives him who admits his fault. -vn *qarr, qarr, qararaan*; ava *qaarir*.

قرار *qaraar* /n pl *-aat*/ **1** bottom, bottom part. *baḥr*[i] *ma-luu-ʃ qaraar* a bottomless sea. ‖*gaab qaraar-u* he did him in. -*ma-ḥadd*[i]*-ʃ ʕirif-lu qaraar* no one could trace him, he wasn't to be found. **2** *[mus]* **2a** bass register, lowest octave of an instrument. **2b** instrumental piece played as introduction to a singer, and repeated as refrain.

قرارى *qiraari* /adj * and pl *-yya*/ inveterate, seasoned.

قرار *qaraar*↑ /n pl *-aat*/ **1** decision. **2** decree, ruling. *qararaat gumhuriyya* presidential decrees.

مقرّ *maqarr*↑ /n pl *maqaarr*/ **1** site. *maqarr*[a] *ʕamal* work site, work premises. **2** headquarters. *maqarr il-ʔumam il-muttaḥida* the Headquarters of the United Nations.

قارّة *qarraʔ, qaarraʔ* /n pl *qaarraat*/ continent.

قرّر *qarrar* /vt/ **1** to cause to confess, force the truth out of. **2** to question (s.o.) with the intention of extracting a confession. -vn *taqriir, taqriir*; ava/pva *miqarrar*.

قرّر *qarrar*↑ /vt/ **1** to fix, stipulate. *ʔeeh ik-kutub illi qarrarit-ha wzaarit it-taʕliim lis-sana g-gayya* which books has the Ministry of Education set for the coming year? *rasm*[i] *muqarrar* set fee. **2** to decide. *qarrart asaafir fil-ḥaal* I've decided to travel immediately. *qarraru (ʔinn*[i]*) yigtimʕu* they decided to hold a meeting. -vn *taqriir*; ava *muqarrir*; pva *muqarrar*.

تقرير *taqriir* /n pl *taqariir*/ report. *bi-yfattif wi-yiktib taqriir* he makes an inspection and writes a report.

مقرّر *muqarrir*↑ /n */ chairman.

مقرّر *muqarrar*↑ /n pl *-aat*/ syllabus.

اتقرّر *ʔitqarrar* /vi/ passive of *qarrar*. -iva *mitqarrar*.

اتقرّر *ʔitqarrar*↑ /vi/ **1** to be fixed, be stipulated. **2** to be decided. -iva *mitqarrar*.

إقرار *ʔiqraar*↑ /n pl *-aat*/ declaration. *ʔiqraar zimma*

maliyya civil servant's declaration of personal assets. *ʃiqraar gumruki* customs declaration.

استقرّ *ʃistaqarr, ʃistaqarr* /vi/ to settle down, become settled. *ʕaawiz yitgawwiz wi-yistaqirr* (or *yistaqarr*) he wants to get married and settle down. *laazim yastaqirru ʕala raʃy* they must make a decision. - vn *ʃistiqraar, ʃistiqraar*; ava *mistiqirr, mistaqarr*.

ق ر ر [2]

قرّ *qarr[2] (u)* /vi/ **1** to jabber on about something, thus risking attracting the evil eye. *min kutr[i] ma qarreeti (ʕaleehum) ma-tgawwizuu-ʃ* you jinxed their getting married with all your jabbering (about them). ‖ *ya naas ya farr[i] kfaaya qarr* phrase (found in particular inscribed on vehicles) intended to discourage envious comments. **2** to nag. *tiʕibt[i] min qarr[i] mraat-i* I got tired of my wife's nagging. **3** to rumble, growl (of a stomach). - vn *qarr, qararaan*; ava *qaarir*; pva *maqruur*.

اتقرّ *ʃitqarr* /vi/ (impersonal) passive of *qarr[2]*. *min yoom ma tqarr[a] ʕala ʃiḫḫit-u w-huwwa ʕayyaan* he's been ill since the chatter about his being so healthy and strong. - iva *mitqarr*.

انقرّ *ʃinqarr* = *ʃitqarr*. - iva *minqarr*.

ق ر ش [1]

قرش *qaraʃ, qaraʃ (u)* /vt/ to crunch, crush with the teeth. *qaʕad gamb[i] minni yuqruʃ ʕala nyaab-u* he sat next to me grinding his teeth. ‖ *qaarif malḫit(-u)* always picking on (s.o.). - vn *qarf, qarf, qaraʃaan*; ava *qaarif*; pva *maqruuf, maqruuf*.

اتقرش *ʃitqaraʃ, ʃitqaraʃ* /vi/ to be crunched, be crushed with the teeth. - iva *mitqirif*.

انقرش *ʃinqaraʃ, ʃinqaraʃ* = *ʃitqaraʃ*. - iva *minqirif*.

ق ر ش [2]

قرش *qirʃ[1]* <T *kuruş*> /n pl *quruuf, qurúfa*/ **1a** one piastre, a one-piastre coin. *ʃilli ma-maʕ-huu-ʃ qirʃ[i] ma-ysawii-ʃ qirʃ [prov]* who hasn't a penny isn't worth a penny. ‖ *qirfeen* (1) two piastres. (2) indeterminate sum of money. - *qirʃ abyaḍ* half-piastre coin. - *ʃil-qirʃ il-ʃabyaḍ yinfaʕ fil-yoom il-ʃiswid [prov]* ≈ save for a rainy day. **1b** *[non-Cairene]* half a piastre, a half-piastre coin. **2** unit of weight for measuring hashish based on the obsolete half-piastre with a hole in the centre.

قروش *quruuf* /pl n/ fish scales.

قروشى *quruufi* /adj invar/ dappled. *ḫuṣaan ʃazraq quruufi* a dapple-grey horse.

ق ر ش [3]

قرش *qirʃ[2]* /n/ shark. *samakit qirʃ* a shark.

ق ر ش [4] see ق ر ى ش : *qariiʃ*

ق ر ش ا ن

قرشانة *qarʃaana* /n pl *-aat*/ old battle-axe (of a woman).

ق ر ص [1]

قرص *qaraṣ (u)* /vt/ **1** to sting, bite (of an insect, a snake). ‖ *ma-ṭasiq-ʃ[i] fir-raagil da - da-na lissa maqruuṣ minnu* don't trust that man! I've just been stung by him! **2** to pinch, tweak. ‖ *ma-tilʕab-ʃ[i] maʕaa - da b-yuqruṣ iz-zahr* don't play with him, he cheats with the dice! **3** to tighten, pull tight. *ʃuqruṣ il-ḫizaam* tighten the girth! - vn *qarṣ*; ava *qaariṣ*; pva *maqruuṣ*.

¶ *qaraṣ ʕala* to apply pressure to. *ʕaawiz ḫadd[i] yuqruṣ ʕalee ʕaʃaan yiftaraḍ* he needs someone to constrain him to work. *qaraṣ ʕala ʃiid-i* he squeezed my hand. *qaraṣ ʕal-banzîin* he stepped on the gas.

قرص *qiriṣ, quruṣ (a)* /vi/ to be bitten, be stung (by an insect or a snake). - vn *qaraṣ*; ava *qarṣaan*.

قرصة *qarṣa* /pl *-aat*/ instance noun of *qarṣ*.

قرصان *qarṣaan* /adj */ **1** bitten or stung (by an insect or snake). **2** *[slang]* penny-pinching, tight-fisted. *naas qarṣaana (ʕal-filuus)* penny-pinching people.

اتقرص *ʃitqaraṣ* /vi/ passive of *qaraṣ*. ‖ *ga ʕaʃaan itqaraṣ ʕalee* he came because he was constrained. - iva *mitqiriṣ*.

انقرص *ʃinqaraṣ* = *ʃitqaraṣ*. - iva *minqiriṣ*.

قرّص *qarraṣ[1]* /vt/ **1** to sting, bite (repeatedly, of an insect). *ʃin-namuus qarraṣ-ni bil-leel* the mosquitoes ate me up last night! **2** to pinch, tweak (hard or repeatedly). - vn *taqriiṣ*; ava *miqarraṣ*.

اتقرّص *ʃitqarraṣ[1]* /vi/ **1** to be stung or bitten (repeatedly, by an insect). **2** to be pinched or tweaked (hard or repeatedly). - iva *mitqarraṣ*.

ق ر ص [2]

قرص *qurṣ* /n pl *ʃiqraaṣ, ʃaqraaṣ*/ **1a** disc, something disc-shaped. ‖ *qurṣ[i] gilla* a dung cake. - *qurṣ ig-gamal* a camel's chest-callus. - *qurṣ il-makana* vaporization chamber of a primus stove. - *qurṣ[i] tilifoon* telephone dial. - *qurṣ[i] ʕasal* honeycomb. **1b** *[athl]* discus. **2** pill, tablet. *qurṣ[i] mnawwim* a sleeping pill.

قرصة *qurṣa* /n pl *-aat, quraṣ*/ **1a** large disc-shaped roll of bread. **1b** disc-shaped piece of *kaḫk*. **2** any of various objects having a disc-like or circular shape (e.g., sewn-in crown-piece of a cap or hat, small round mat to

protect a table surface). **3** panel of wood (especially as part of a piece of furniture). *qurṣit maktab* top of a desk. *qurṣit kursi* seat of a chair.

قرّص *qarraṣ*[2] /vt/ to shape (dough) into rounds. - vn *taqriiṣ*; ava *miqarraṣ*.

اتقرّص *ʔitqarraṣ*[2] /vi/ to be shaped into rounds (of dough). - iva *mitqarraṣ*.

[3] ق ر ص see [1] ق ر و ص : *qaruuṣ, qaruuṣa*[1]

[4] ق ر ص see [2] ق ر و ص : *qaruuṣa*[2]

ق ر ص ن

قرصنة *qarṣana* /n/ piracy. *ʔil-qarṣana l-gawwiyya* air piracy, hijacking.

قرصان *qurṣaan, qurṣaan* /n pl *qaraṣna, qaraṣnaʔ*/ pirate.

ق ر ص ى ا

قراصيا *qaraṣya* <Gr *kerasia*> /coll n/ prune(s).

قراصية *qaraṣyaaya* /unit n, pl *-aat*/ a prune.

[1] ق ر ض

قرض *qaraḍ*[1] *(u)* /vt/ **1** to punch (paper). *ʔil-kumsari qaraḍ it-tazaakir* the conductor punched the tickets. **2** to scrub (clothes). **3** to gnaw on (of rodents). — /vi/ **4** to gnaw. *ma-tuqruḍ-ʃ*[i] *f-ḍawafr-ak* don't chew your finger-nails! ‖ *qaraḍ ɛala snaan-u* he gnashed his teeth in anger. - vn *qarḍ, qaraḍaan*; ava *qaariḍ*; pva *maqruuḍ*.

انقرض *ʔitqaraḍ* /vi/ passive of *qaraḍ*. - iva *mitqiriḍ*.

انقرض *ʔinqaraḍ* /vi/ **1** = *ʔitqaraḍ*. **2** to become extinct. - vn *ʔinqiraaḍ*; ava *munqariḍ*; iva *minqiriḍ*.

[2] ق ر ض

قرض *qarḍʔ* /n pl *quruuḍ*/ loan.

أقرض *ʔaqraḍ* /vt/ to lend (s.th.) to (s.o.). - vn *ʔiqraaḍ*; ava *muqriḍ*.

اقترض *ʔiqtaraḍʔ* /vi/ to borrow (money), take a loan. - vn *ʔiqtiraaḍ*; ava *muqtariḍ*.

[3] ق ر ض

قرض، قرظ *qaraḍ*[2] /coll n/ pods of the sunt tree (used medicinally and in the manufacture of ink).

قرضة، قرظة *qaraḍa* /unit n, pl *-aat*/ a pod of the sunt tree.

[1] ق ر ط

قرط *qaraṭ (u)* **1** /vt/ to cut off. *ʃiil ʔiid-ak ya waad l-aqruṭ-ha* take your hand away, kid, or I'll cut it off! *qaraṭ-u bi-snaan-u* he bit it off. **2** /vi/ to tighten, become tight. *ʔig-gazma b-tuqruṭ ɛala rigl-i* the shoe pinches my foot. *ʔil-baab qaraṭ ɛala ṣbaaɛ-i* the door squashed my finger. *baṭn-i b-tuqruṭ ɛalayya* my stomach has cramps. - vn *qarṭ, qaraṭaan*; ava *qaariṭ*; pva *maqruuṭ*.

قرطة *qarṭa* /n pl *-aat*/ **1** instance noun of *qarṭ*. **2** /also pl *quraṭ*/ (head) kerchief.

مقروطة *maqruuṭa* /n pl *maqariiṭ*/ sawn-off shotgun.

انقرط *ʔitqaraṭ* /vi/ to be cut off. - vn *mitqiriṭ*.

انقرط *ʔinqaraṭ* = *ʔitqaraṭ*. - iva *minqiriṭ*.

قرّط *qarraṭ* /vt/ **1** intensive of *qaraṭ* 1. **2** to tighten. *ʃir-rubaaṭ ɛaawiz taqriiṭ* the bandage needs tightening. *qarraṭ iṣ-ṣamuula* he tightened the screw. - /eliptically/ *ma-tqarraṭ-ʃ*[i] *ɛala baṭn-i* don't tighten (e.g., the belt) round my stomach! — /vi/ **3** to press, apply pressure. *qarraṭ ɛal-faraamil* step on the brakes! *qarraṭ*[a] *ɛalee ɛaʃaan yiigi* I pressed him to come. - vn *taqriiṭ*; ava/pva *miqarraṭ*.

تقريطة *taqriiṭa* /pl *-aat*/ instance noun of *taqriiṭ*.

اتقرّط *ʔitqarraṭ* /vi/ passive of *qarraṭ* 1 and 2. - iva *mitqarraṭ*.

[2] ق ر ط see ق ر ا ط : *qiraaṭ*

ق ر ط س

قرطاس *qurṭaas* /n pl *qaraṭiis*/ **1** paper cornet. **2** cuckold.

قرطس *qarṭas* /vt/ **1** to make a cornet of (paper). **2** to make a cuckold of. *miraat-u mqarṭasaa* his wife is putting horns on him. - vn *qarṭasa*; ava/pva *miqarṭas*.

اتقرطس *ʔitqarṭas* /vi/ passive of *qarṭas*. - iva *mitqarṭas*.

ق ر ط ف

قرطف *qarṭaf* /vt/ to strip of leaves, defoliate. *ʔirsili l-muluxiyya qabl*[i] *ma-tqarṭafii-ha* wash the *muluxiyya* before you pluck off its leaves. - also *qaṭṭaf*. - vn *qarṭafa*; ava/pva *miqarṭaf*.

اتقرطف *ʔitqarṭaf* /vi/ to be stripped of leaves, be defoliated. - vn *tiqarṭiif*; iva *mitqarṭaf*.

[1] ق ر ط م

قرطم *qarṭam* /vt/ to nibble at, take (small) bites of. *bi-yqarṭam ir-rixiif* he is eating away the loaf with small bites. *baṭṭal tiqarṭam (fi-)ḍawafr-ak* stop biting your finger-nails! - vn *qarṭama*; ava/pva *miqarṭam*.

اتقرطم *ʔitqarṭam* /vi/ passive of *qarṭam*. - vn *tiqarṭiim*; iva *mitqarṭam*.

[2] ق ر ط م

قرطم *qurṭum* /n/ safflower, safflower seeds.

ق ر ظ see ق ر ض [3]

ق ر ع [1]

قرع *qarʕ* **1** /coll n/ gourd(s). *qarʕ[i] ruumi* pumpkin (Curcubita pepo). *qarʕ[a] ʕasali* or *qarʕ istambulli* winter squash (Curcubita maxima). **2a** corruption, corrupt behaviour. *ʔiʃ-faʕb[i] qirif mil-qarʕ illi f-kull[i] ħitta* the people became fed up with the corruption everywhere. **2b** empty boasting.

قرعة *qarʕa* /n pl *-aat*/ /unit n/ a gourd.

قرعاية *qarʕaaya* /unit n, pl *-aat*/ a gourd.

قرعجي *qarʕagi* /n pl *-yya*/ **1** one who is venal or corrupt. **2** braggart.

قرّع *qarraʕ[1]* /vi/ **1** to become venal or corrupt. **2** to brag, engage in empty boasting. - vn *taqriiʕ*; ava *miqarraʕ*.

ق ر ع [2]

قرع *qiriʕ, quruʕ (a)* /vi/ to be or become bald from or afflicted by ringworm. ‖ *ʔid-dukkaana qirʕit* the shop was cleared out (of stock). - vn *qaraʕ*; ava *qarʕaan*.

قرعة *qaraʕa* /n pl *-aat*/ **1** head afflicted by ringworm. **2** *[deris]* bald head.

أقرع *ʔaqraʕ* /adj, fem *qarʕa*, pl *qurʕ*/ **1** afflicted by ringworm. *ʔil-qarʕa titbaaha b-faʕr[i] bint uxt-a-ha [prov]* the bald woman boasts of her niece's hair. **2** old-hat, stale. *nukta qarʕa* a tired joke. *ħaraka qarʕa* an obvious trick. ‖ *baṭṭiixa qarʕa* white tasteless water-melon.

قراع *quraaʕ* /n/ ringworm.

اقرعّ *ʔiqraʕʕ* /vi/ to be or become afflicted by ringworm. - ava *miqraʕʕ*.

ق ر ع [3]

قرع *qaraʕ (i)* /vt/ to curb, check. *ma-fii-ʃ ħadd[i] yiʕraf yiqriʕ-u* no one can keep him in line. - ava *qaariʕ*; pva *maqruuʕ, maqruuʕ*.

مقرعة *maqraʕa* /n pl *maqaariʕ*/ switch of split cane.

اتقرع *ʔitqaraʕ* /vi/ to be curbed, be checked. - iva *mitqiriʕ*.

قرّع *qarraʕ[2]* /vt/ to chide, upbraid. *ʕammaal yiqarraʕ-na min saaʕit ma waṣal* he's been carping at us since he arrived. - vn *taqriiʕ*; ava *miqarraʕ*.

ق ر ع [4]

قرعة *qurʕa* /n pl *-aat*/ **1** settling a question or making a choice by drawing lots or tossing a coin. *ħa-ywazzaʕu ʃ-ʃuqaq bil-qurʕa* they will assign the flats by drawing lots. **2** *[obsol]* medical test for military conscription. *raaħ il-qurʕa* he was called for the medical test to determine whether or not he would be conscripted.

ق ر ف [1]

قرف *qirif, quruf (a)* /vi/ to become fed up, disgusted, sickened or repelled. *ʔana qrift[i] mil-ʕiiʃa di* I became sickened by this life. ‖ *lamuuna f-balad qarfaana [prov]* ≈ just what's needed. - vn *qaraf, qarafaan*; ava *qarfaan*.

قرف *qaraf[1] (i)* /vt/ to disgust, sicken, repel. *da-nta b-tiqrif-ni moot* you make me sick! *humma maqrufiin minnu* ≈ they are fed up with him. - vn *qarf, qaraf*; ava *qaarif*; pva *maqruuf*.

قرف *qaraf[2]* /n/ filth, something disgusting.

اتقرف *ʔitqaraf* /vi/ to be disgusted, sickened or repelled. - iva *mitqirif*.

قرّف *qarraf* /vt/ to disgust, sicken, repel. *manẓar yiqarraf il-bani ʔaadam* a sight to sicken a man. - vn *taqriif*; ava/pva *miqarraf*.

اتقرّف *ʔitqarraf* /vi/ passive of *qarraf*. - iva *mitqarraf*.

قارف *qaarif* /vt/ to bore (s.o.), make (s.o.) fed up. - vn *miqarfa*; ava *miqaarif*.

اتقارف *ʔitqaarif* /vi/ to be bored, be made fed up. - iva *mitqaarif*.

مقرف *muqrif* /adj */ disgusting, sickening, repellent.

استقرف *ʔistaqraf* **1** /vt/ to consider repellent, disgusting or sickening. *ʔistaqraf il-ʔooḍa w-rafaḍ-ha* he found the room repellent and refused it. **2**↓ /vi/ to become disgusted, sickened or repelled. - ava *mistaqrʿ*.

(ق ر ف [2])

قرفة *qirfa[1]* /n/ cinnamon.

قرفة *qirfa[2]* /n pl *qiraf*/ luck (of a deal), way things turn out (on a deal). *ʔil-ʔarḍ[i] gat qirfit-ha kwayyisa* the land turned out to be a good buy. *ʔig-gawaaz qiraf [prov]* marriage is all a matter of luck. ‖ *ʃilʕit qirfit-ha wiħʃa* she turned out to be a lousy deal as a wife.

ق ر ف [3] see ق ر ا ف : *qaraafa*

ق ر ف ص

قرفص *qarfaṣ* /vi/ to squat on one's heels. - vn *qarfaṣa*; ava *miqarfaṣ*.

قرافيص *qarafiiṣ: qaʕad ʕala qarafiiṣ(-u)* to squat on one's heels.

ق ر ق ر

قرقر *qarqar* /vi/ to rumble, growl (of the stomach). *baṭn-i bi-tqarqar mig-guuʕ* my stomach is growling from hunger. - vn *qarqara*; ava *miqarqar*.

ق ر ق
قرق *qaraq (u)* /vi/ to grumble, grouse. *dayman tuqruq wi-ma-tbaṭṭal-ʃ*^{i} *qarq* she's always grousing and never stops! - vn *qarq*.
قرّاق *qarraaq* /adj */ given to grumbling and grousing.
قرّق *qarraq* /vi/ to chortle, cackle. - vn *taqriiq*; ava *miqarraq*.

[1] ق ر ق ش
قرقش *qarqaʃ, qarqiʃ* /vt/ to chew, crunch (crisp food). ‖*raagil yiqarqaʃ il-ḥadiid* a man who eats nails, a real tough guy. - *ʃin ɛaamit qarqaʃt*^{i} *w-ʃin virqit qarqaʃt* ≈ it's all the same to me. - vn *qarqaʃa*; ava/pva *miqarqaʃ, miqarqiʃ*.
قرقوشة *qarquuʃa* /n pl *qaraqiiʃ*/ 1 a kind of dry biscuit, cracker. 2 cartilage.
اتقرقش *ʃitqarqaʃ, ʃitqarqiʃ* /vi/ to be crunched, be crushed by the teeth. - iva *mitqarqaʃ, mitqarqiʃ*.

[2] ق ر ق ش see ق ر ق و ش : *qaraqooʃ*

ق ر ق ض
قرقض *qarqaḍ* /vt/ to gnaw on. ‖*kalb*^{i} *yqarqaḍ fi-ɛaḍma* one who is engaged in something devoid of importance or consequence. - vn *qarqaḍa*; ava/pva *miqarqaḍ*.
قرقوضة *qarquuḍa* /n pl *qaraqiiḍ*/ small piece, fragment.
اتقرقض *ʃitqarqaḍ* /vi/ to be gnawed. *ɛaḍm*^{i} *mitqarqaḍ* chewed-up bone. - vn *tiqarqiiḍ*; iva *mitqarqaḍ*.

ق ر ق ع
قرقع *qarqaɛ* /vi/ to ring out, echo, resound. *diḥkit-u bi-tqarqaɛ tisammaɛ id-dinya* his laugh rings out loudly for all to hear. - vn *qarqaɛa*; ava *miqarqaɛ*.

ق ر ق و ش
قراقوش *qaraqooʃ* <T prop n *karakuş*>: *ḥukm*^{i} *qaraqooʃ* tyranny, complete dictatorship.

[1] ق ر م
قرم *qaram (u)* /vt/ to bite hard into, bite off. *wi-hiyya bi-tdaafiɛ ɛan nafs-a-ha raaḥit qarma draaɛ-u* while she was defending herself, she bit deeply into his arm. - vn *qarm*; ava *qaarim*; pva *maqruum*.
قرمة *qarma* /pl *-aat*/ instance noun of *qarm*.
قرم *qirim* /adj */ tough, hard-bitten.
اتقرم *ʃitqaram* /vi/ to be bitten into, be bitten off. *yiṣaḥḥ il-ɛeeʃ yitqirim bis-sinaan kida* is it right that (a loaf of) bread should be bitten into like that? - iva *mitqirim*.
انقرم *ʃinqaram* = *ʃitqaram*. - iva *minqirim*.
قرّم *qarram* /vt/ 1 to harden, toughen (e.g., of experience). *ʃis-suuq illi qarram-u* it is the market which has toughened him. *wiliyya mqarrama* a hardbitten woman. ‖*miqarram (ɛal-filuus)* miserly. 2 to top and tail (vegetables). - vn *taqriim*; ava *miqarram*.
اتقرّم *ʃitqarram* /vi/ passive of *qarram*. - iva *mitqarram*.

[2] ق ر م
قرمة *qurma* <Gr *kormos*> /n pl *quram*/ 1 tree stump. 2 chopping block.

ق ر م ز
قرمزى *qurmuzi, qurmuzi* /adj/ scarlet. *ʃil-ḥumma l-qurmuziyya [path]* scarlet fever.

ق ر م ش
قرمش *qarmiʃ* 1 /vt/ to chew, crunch (crisp food). *ʃanaam ʃizzaay wi-nta bi-tqarmiʃ baskawiit fi-widn-i* how can I sleep with you chewing biscuits in my ear! ‖*ḥ-aqarmiʃ-ak* I'll crunch your bones to meal! 2 /vi/ to become dry and crisp. *xalli l-makaroona fil-furn*^{i} *ɛaʃaan tiqarmiʃ* leave the pasta in the oven so it may get crisp. - vn *qarmaʃa*; ava *miqarmiʃ*.
اتقرمش *ʃitqarmiʃ* /vi/ 1 to be chewed or crunched. 2 to become dry and crisp. 3 to sizzle with annoyance or indignation. - ava/iva *mitqarmiʃ*.

ق ر م ط
قرمط *qarmaṭ* /vi/ to limit one's spending, cut down on one's expenses. *qarmaṭit ɛala l-ɛiyaal fil-maṣruuf* she cut down on what she spent on her children. - also *qarbaṭ*. - vn *qarmaṭa*; ava *miqarmaṭ*.

ق ر م و ط
قرموط *qarmuuṭ* /n pl *qaramiit*/ Clarias anguillaris, Clarias lazera, a type of catfish found in the Nile. ‖*raagil qarmuuṭ* a slippery character.

[1] ق ر ن
قرن *qarn* /n pl *quruun*/ 1 pod. *qarn*^{i} *xarruub* carob pod. *qarn*^{i} *filfil* a single pepper. 2 *[anat]* amniotic sac. 3 horn. *qarn*^{i} *gamuusa* a buffalo horn. *quruun ɛilba* horns that grow towards each other over the head. *quruun musaṭṭaḥa* flat backward-growing horns. ‖*ʃaayil id-dinya ɛala qarn-u* he's very depressed. - *waḥiid il-qarn* rhinoceros. - *min qarn-u ʃadhin-lu [prov]* ≈ make him pay for all he gets. — /no pl/ 4 cuckold. 5 horn (as a

material). ‖*maṭwa qarn* flick-knife (of a type originally made with a horn handle).

قرنيّة *qarniyya* or *qarniyya* /n pl *-aat/ [anat]* cornea.

قرن *qirn: ḥaaṭiṭ qirn-(u) min qirn-(..)* (he's) always ready to pick on (s.o.). - also *niqr*.

قرّن *qarran* /vt/ **1** to cuckold. *di bitt*^{i} *sayba ḥa-tqarran illi yiggawwiz-ha ʕakiid* she is a loose girl who will certainly cuckold (the man) who marries her. **2** to top and tail (vegetables). — /vi/ **3** to become cuckolded (of a husband). **4** to produce pods (of a plant). - vn *taqriin*; ava/pva *miqarran*.

اتقرّن *ʔitqarran* /vi/ **1** to be cuckolded. **2** to be topped and tailed (of vegetables). - iva *mitqarran*.

ق ر ن [2]

قرن *qaran*↑ *(i)* /vt/ to connect, join, unite. *ma-qarant*^{i}*-ʃ been il-ʔitneen* I didn't connect the two (things), I didn't see the connection between them. *ḥawagb-u maqruuna* his eyebrows grow together. - vn *qiraan*; ava *qaarin, qaarin*; pva *maqruun*.

قران *qiraan* /n/ **1** verbal noun of *qaran*. **2** perverseness: *humma ɛamliin qiraan maɛa baɛḍ* ≈ they're making things difficult for each other.

قران *qaraan*↑, *qiraan*↑ /n/ marriage. *qaraan saɛiid* (I wish you) happy marriage!

قرن *qarn* /n pl *quruun*/ century. *ʔil-quruun il-wusṭa* the Middle Ages.

قرن *qirin* /adj */ perverse.

قرين *qariin*↑ /n pl *quranaaʔ*/ formal term of reference to a husband. *malikit ʔingiltirra w-qarin-ha* the Queen of England and her consort. ‖*qariin is-suuʃ* one associated with what is evil.

قرين *qariin* /n pl *qurana*/ (in popular belief) one's spiritual double, one's counterpart in the spirit world (more commonly *ʃaxx*).

قرينة *qariina* /n/ **1** /pl *-aat*/ formal term of reference to a wife. **2** /pl *qaraaʔin*/ clue, indication.

قرينة *qariina*^{1} /n pl *qaraayin*/ (in popular belief) one's spiritual double, one's counterpart in the spirit world (more commonly *ʃuxt*).

قارن *qaarin* /vt and vi/ to compare. *ma-tiqdar-ʃ*^{i} *tqaarin beeni w-beenu* (or *tqarin-ni bii*) you can't compare between him and me. - vn *muqarna*; ava/pva *muqaarin, miqaarin*.

مقارنة *muqarna*↑ /n pl *-aat*/ comparison.

اتقارن *ʔitqaarin* /vi/ to be compared. - iva *mitqaarin*.

ق ر ن [3] see ق ر و ن: *qaruun*

ق ر ن [4] see ق ر ي ن: *qariina*^{2}

ق ر ن ب –

قرنبيط *qarnabiiṭ* <perh T *karnabit*> /coll n/ cauliflower(s).

قرنبيطة *qarnabiiṭa* /unit n, pl *-aat*/ a cauliflower.

قرنبيطيّاية *qarnabiṭiyyaaya* = *qarnabiiṭa*.

ق ر ن س

مقرنس *miqarnas* /n/ (in Islamic architecture) stalactite work, honeycomb work. (see Pl.G, 14).

ق ر ن ف ل

قرنفل *qurunfil* /coll n/ **1** clove(s). **2** carnation(s).

قرنفلة *qurunfila* /unit n, pl *-aat*/ **1** a clove. **2** a carnation.

قرنفلاية *qurunfilaaya* /unit n, pl *-aat*/ a clove.

ق ر ن ف –

قرنفيل *qaranfiil; tirs il-qaranfiil* bevel gear (of a watch).

ق ر و [1]

قرو *qarw* <Copt> /n/ *[bot]* oak. - also *ʔarw*.

ق ر و [2] see ق ر ي: *qarawi*

ق ر و ا ن

قروان *qarawaan* <T *karavana*> /coll n/ metal or porcelain basin(s) (smaller than *ṭiṭ* q.v.).

قروانة *qarawaana* /unit n, pl *-aat*/ a metal or porcelain basin (smaller than a *ṭiṭ* q.v.). *qarawaanit muuna* rough metal bowl for carrying mortar or concrete.

قروانجي *qarawangi* /n pl *-iyya*/ construction labourer who carries mortar in an *qarawaana*.

ق ر و ص [1]

قاروص *qaruuṣ* /n/ Marone labrax, a type of bass found in the Nile and the Mediterranean. - also *ɛaruus*.

قاروصة *qaruuṣa*^{1} /unit n/ a bass.

ق ر و ص [2]

قاروصة *qaruuṣa*^{2} <prob It *grossa*> /n pl *-aat*/ carton, (containing a set number of packets). *qaruuṣit sagaayir* a carton of cigarettes.

قاروصاية *qaruṣaaya* = *qaruuṣa*.

ق ر و ن [1]

قارون *qaruun* /prop n/ lake in the Fayyum. ‖*maal qaruun* immense wealth, as in *ɛandu maal qaruun* he's filthy rich.

ق ر و ن [2] see ق ر و ا ن: *qarawaan, qarawaana, qarawangi*

ق ر ى [1]

قرأ *qara (a)* /vt/ **1** to read. *ʕiqrii-li g-gawaab* read me the letter. ‖ *qara l-fingaan* to read (the future in the dregs of) a coffee-cup. - *qara k-kaff* to read (the future in) a palm. **2** to recite (the Koran). ‖ *xud xamiis-u ʕin fa-lla ma-qara* see *xamiis* 2c. — /vi/ **3** to read. *tiʁraf tiqra* can you read? ‖ *miin yiqra w-miin yismaʁ* ≈ who gives a damn (what the problem is)? - vn *qiraaya*; ava *qaari*; pva *maqri*.

القرآن *ʕil-qurʕaan, ʕil-quraan* /n/ the Koran.

اتقرا *ʕitqara, ʕitqara* /vi/ **1** to be read. **2** to be recited (of the Koran). ‖ *ʕitqarit fatḥit-ha* (her *fatḥa* (of the Koran) has been recited) she has become engaged. **3** (impersonal) passive of *qara*. *ʕin-nuur da ma-yitqirii-ʃ fii* one can't read in that light. - iva *mitqiri*.

انقرا *ʕinqara* = *ʕitqara*. - iva *minqiri*.

قرّأ *qarra, qarra* /vt/ **1** to cause to read. **2a** to cause to recite (the Koran). *ʕilli yqarrii zayy illi yxarrii [prov]* (he is so undiscriminating that in his eyes) the one who teaches him the Koran is exactly like the one who gives him a hard time. **2b** to hire (s.o.) to recite the Koran. - vn *taqriyya*; ava *miqarri*.

اتقرّا *ʕitqarra, ʕitqarra* /vi/ (impersonal) passive of *qarra*. *bi-yitqarra ʁal-mayyitiin fil-ʃaʁyaad* during feasts the Koran is recited for (the souls of) the dead. - iva *mitqarri*.

مقرئ *muqriʔ↑* /n */ professional Koran reciter.

استقرا *ʕistaqra↓* /vt/ to try to read. *ʕistaqra-lna g-gawaab* he tried to read us the letter. - ava *mistaqri*.

ق ر ى [2]

قرية *qarya↑* /n pl *qura*/ village.

قروى *qarawi↑* **1** /adj/ pertaining to villages. *ʕil-maglis il-qarawi* the village council. **2** /n */ villager.

ق ر ى ش

قريش *qariiʃ*: *gibna qariiʃ* kind of non-fat salted white cheese.

ق ر ى ف

قريف *qaryif* **1** /vt/ to displease, make gloomy, depress. *suluuk-u qaryif-ni* his behaviour got me down. **2** /vi/ to become displeased, gloomy or depressed. - vn *qaryafa*; ava/pva *miqaryif*.

اتقريف *ʕitqaryif, ʕitqaryaf* /vi/ to be displeased, be made gloomy, be depressed. - iva *mitqaryif*.

ق ر ى ن

قرينة *qariina*[2] <Gr *karina*> /n pl *-aat*/ *[naut]* keel. *looḥ il-qariina* garboard-strake.

ق ز ا ن

قزان *qazaan, qizaan* <T *kazan*> /n pl *-aat*/ boiler, cauldron.

ق ز ح

قزح *qazaḥ (a)* /vi/ **1** to leap. **2** to go uninvited, appear where one is not wanted. *ʃuul in-nahaar yiqzaḥ ʁandaha* he's always imposing himself (on her) in her home. — /vt/ **3** to leap across. *qazaḥ il-qanaaya* he leapt across the stream. - vn *qazḥ, qazaḥaan*; ava *qaaziḥ*.

قزحة *qazḥa* /inst n, pl *-aat*/ a leap.

قزّح *qazzaḥ* /vt/ to cause to leap. ‖ *qazzaḥt-u sana* I got him to skip a year. - vn *taqziiḥ*; ava/pva *miqazzaḥ*.

اتقزّح *ʕitqazzaḥ* /vi/ passive of *qazzaḥ*. - iva *mitqazzaḥ*.

ق ز ر

قذر *qazir* /adj */ dirty. *naas qaziriin* dirty people (morally or physically).

أقذار *ʕaqzaar↑* /pl n/ dirt, filth.

قاذورات *qazuraat* /pl n/ dirt, filth.

قذارة *qazaara, qazaara* /n/ dirtiness.

ق ز ز [1]

قزّز *qazziz, qazziz* /vt/ to disgust, sicken. *manẓar yiqazziz in-nifs* a sickening sight. - vn *taqziiz*; ava *miqazziz, muqazziz*.

اتقزّز *ʕitqazziz* /vi/ to be sickened, be disgusted. *ʕana b-atqazziz min ʃariiqit muʁamlit-u lis-sitt[i] btaʁt-u* I am sickened by the way he treats his wife. - iva *mitqazziz*.

ق ز ز [2]

قزاز *qizaaz* **1** /coll n/ glass. *ʃaffaaya qizaaz* a glass ashtray. *qizaaz fibbaak* window pane. ‖ *qizaaz ʕingiliizi* frosted glass. **2** /n/ window (pane). *ʕiqfil il-qizaaz* close the window!

قزازة *qizaaza* /n pl *-aat*/ **1** /unit n/ piece or pane of glass. **2** /pl also *qazaayiz*/ bottle. *qizaazit biira* a bottle of beer. **3** a glass cover or shield. *qizaazit saaʁa* watch glass. *qizaazit maktab* glass desk-top. *qizaazit lamba* glass chimney of a lamp.

قزّاز *qazzaaz[1]* **1** /n */ window pane and mirror seller. **2** /adj/ shiny. ‖ *gazma qazzaaz* patent leather shoes. - *waraq ḳazzaaz* cellophane.

ق ز ز [3]

قزّ *qazz* **1** /n/ silk. *duud qazz* silkworms. **2** /adj invar/ raw (of silk). *ḥariir qazz* raw silk.

قزّاز *qazzaaz[2]* /n */ *[text]* hand-loom worker.

ق ز ز ي ر
قزّير *qazziir* <Gr *kassiteros*> /n/ **1** soldering alloy (made up of two parts lead to one part tin). **2** tin. - also *qaṣdiir*.

ق ز ع
قزعة *quzɛa* /adj invar/ *[deris]* short (of persons).

ق ز ف see ق د ف [2]: *qazaf, qaazifa, maqzuuf, qaziifa*

ق ز ق [1]
قزق *qazaq[1]* <T *kızak*> /n pl *-aat*/ **1** dolly, trolley. **2** *[naut]* slipway.

ق ز ق [2]
قزق *qazaq[2]* <T *kazık*> /coll n/ telegraph pole(s).
قزقة *qazaqa* /unit n, pl *-aat*/ a telegraph pole. - also *kazaka*.

ق ز ق ز
قزقز *qazqaz, qazqiz* /vt/ **1** to crack (seeds) between the front teeth. **2** to crunch on, munch (nuts, seeds etc.). ‖*qazqiz fi-siirit in-naas* to gossip maliciously about people. - vn *qazqaza*; ava/pva *miqazqaz, miqazqiz*.
اتقزقز *ʃitqazqaz, ʃitqazqiz* /vi/ passive of *qazqaz*. - iva *mitqazqaz, mitqazqiz*.

(ق ز م)
قزمة *qazma* <T *kazma*> /n pl *qizam*/ pick-axe.
قزم *qizm* /n pl *ʃaqzaam*/ dwarf, pigmy.

ق ز ن see ق ز ا ن: *qazaan, qizaan*

ق س س
قسّ *qiss[1]* /n pl *qasaawisa*/ formal term of reference to a priest or minister of the church.
قسّيس *qassiis* /n pl *qusus, qusasa, qusuus, qasawsa*/ priest, minister of the church.

ق س ط
قسط *qist* /n pl *ʃaqsaat, qisaat*/ **1** instalment (of money due or paid). **2** /pl also *qusuut*/ metal can (e.g., milkman's churn).
قسّط *qassat* /vt/ **1** to divide up equally. **2** to pay for in instalments. *bi-yqassat id-diyuun illi ɛalee* he pays his debts in instalments. **3** to allow payment for in instalments. *qassat taman il-ʃarḍ[a] ɛala l-mullaak ig-gudaad* he allowed the new owners to pay the price of the land in instalments. ‖*bit-taqsiit* on the instalment plan, by instalments. - vn *taqsiit*; ava/pva *miqassat*.
اتقسّط *ʃitqassat* /vi/ passive of *qassat*. - iva *mitqassat*.

ق س ط ر
قسطرة *qastara* /n/ *[med]* catheter.

ق س م [1]
قسم *qasam[1] (i)* /vt/ **1a** to divide, divide up. *maqsuum nuṣṣeen* divided in half. *qasam if-faɛr[i] w-laff[i] kull[i] xuṣla* he sectioned off the hair and rolled up each lock. **1b** *[math]* to divide (a sum). *ʃiqsim xamsiin ɛala ɛaʃara* divide fifty by ten. **2a** to ordain, destine (of God). *rabb-i-na qasam laha l-ḥizn min badri* Our Lord ordained sadness for her (too) early (in life). **2b** *[Chr]* to ordain. *qasamuu qassiis* they ordained him priest. - vn *qasamaan, qisma*; ava *qaasim*; pva *maqsuum*.
قسم *qisim, qusum (a)* /vi/ to be destined, be ordained (i.e. by God). *ʃil-ḥizn[i] qisim laha* sorrow was destined for her. ‖*tibqa f-buqq-ak wi-tiqsam* (or *wi-tuqsam) li-ɣeer-ak [prov]* ≈ there's many a slip 'twixt the cup and the lip. - vn *qasamaan, qisma*.
¶ *ɛala (qadd[i]) ma qusum* according to what is available, in the measure of what has been provided.
قسمة *qisma* /inst n, pl *-aat, qisam*/ **1** a division, a (fated) lot. ‖*ṣalaat il-qisma [Chr]* fraction prayer pronounced when breaking the Host. - *ʃilli lu qisma f-ḥaaga yʃuf-ha [prov]* ≈ one's fate will be fulfilled, that's fate! (phrase of condolence). - *xad illi fii ʃil-qisma* (1) he took a gratuity. (2) he got a scolding. **2** *[math]* a division sum.
قاسم *qaasim[1]* /prop n/ male given name. ‖*nawwit qaasim* see *nawwa*.
قسم *qism, qism* /n pl *ʃaqsaam, ʃaqsaam*/ **1** section, division, department. *raʃiis il-qism* department head. **2** police station, precinct station.
قسيمة *qasiima* /n pl *qasaayim*/ **1** receipt, stub. **2** certificate. *qasiimit gawaaz* a marriage certificate. *qasiimit beeɛ* a bill of sale.
اتقسم *ʃitqasam* /vi/ passive of *qasam*. - iva *mitqisim*.
اتقسم *ʃitqisim* /vi/ (impersonal) passive of *qisim* and *qusum*. *ʃitqisim-lu bil-ḥizn* sadness was his ordained fate. - iva *mitqisim*.
انقسم *ʃinqasam* = *ʃitqasam*. - iva *minqisim*.
قسّم *qassim* /vt/ **1a** to divide up, subdivide. *qassimu maṣr[a] ɛala sitt[i] manaaṭiq* they divided Cairo into six areas. **1b** to distribute, share out. *qassimna l-ʃakl[a] ɛal-ɣalaaba* we distributed the food among the poor. **2** *[elec]* **2a** to distribute (the circuitry of wiring). **2b** to

regulate (electric voltage). *ʔik-kahraba fil-ɛarabiyya ɛawza taqsiim* the car's electrical voltage needs regulating. **3** *[mus]* to improvise around (of a solo instrumentalist). *qassim-lina ʃwayyit rast* improvise a bit of *rast* for us. — /vi/ **4** *[mus]* to improvise (of a solo instrumentalist). *qaaɛid ţuul in-nahaar yiqassim ɛal-ɛuud* he sits all day improvising on the *ɛuud*. - vn *taqsiim*; ava/pva *miqassim*.

تقسيم *taqsiim* /n pl *taqasiim*/ (land used in a) development scheme.

تقسيمة *taqsiima* /n pl *-aat*/ **1** instance noun of *taqsiim*. **2** /pl also *taqasiim*/ *[mus]* short improvisation on a given melody type, either as a self-contained piece, or as a cadenza within a given piece.

اتقسّم *ʔitqassim* /vi/ passive of *qassim*. - iva *mitqassim*.

قاسم *qaasim*[2] /vt/ to share with (s.o. in s.th.). *qasim-ni fil-ʔakl*[i] *da* share that food with me! - vn *miqasma*; ava *miqaasim*.

اتقاسم *ʔitqaasim* **1** /vt/ **1a** to distribute amongst or share out with one another. *ʔitqasmu l-ʔakl* divide the food among yourselves. **1b** to divide up (with another, with others). *ʔitqaasim is-sudaani maɛaaya* he shared the peanuts with me. **2** /vi/ to make a distribution amongst one another. *ʔitqasimna fil-ʔakl* we shared out the food amongst ourselves. - ava/pva *mitqaasim*.

ق س م[2]

قسم *qasam*[2], *qasam*[↑] *(i)* /n/ oath.

¶ *qasaman: qasaman bi-* ... I swear by .... *qasaman ɛaẓaman* ... ≈ I swear the greatest (possible) oath ..., as in *qasaman ɛaẓaman ḥ-afanyar-u law ma-qabb*[i]*-ʃ bil-filuus* I swear by all that is sacred, I'll do him in if he doesn't come up with the money!

أقسم *ʔaqsam*[↑] /vi/ to take an oath, vow. *ʔuqsim bi-llaah* I swear by God. - iva *muqsim*.

ق س و see ق س ى : *qaswa, qasaawa*

ق س ى

قسى *qisi (a)* /vi/ to become cruel, become hard. *(qalb-u) qisi ɛalayya fa-sibt-u* he became cruel so I left him. - vn *qasayaan, qaswa*; ava *qaasi*.

قسوة *qaswa, qaswa* /n/ cruelty.

قساوة *qasaawa* /n/ cruelty.

قاسى *qaasi* /adj */ cruel, hard. *kaanu b-yiftaxalu f-ẓuruuf qasya* they were working in harsh conditions.

أقسى *ʔaqsa* /el/ crueller/cruellest, harder/hardest.

اتقسى *ʔitqasa* /vi/ (impersonal) passive of *qisi*. *yaama tqasa ɛaleeha fil-madrasa* how cruelly she was treated at school! - iva *mitqisi*.

انقسى *ʔinqasa* = *ʔitqasa*. - iva *minqisi*.

قسّى *qassa* /vt/ **1** to render unfeeling, render callous. *qasseet qalb-i ɛalee* I hardened my heart against him. **2** to harden (iron) by quenching. - vn *taqsiyya*; ava *miqassi*.

قاسى *qaasa* **1** /vt/ to suffer from. *ʔil-wiḥda lli b-yiqasii-ha* the loneliness he suffers. **2** /vi/ to suffer. *huwwa mqaasi min il-ḥubb* he's suffering from the pangs of love. - vn *miqasiyya*; ava *miqaasi*.

ق ش ا ن

قيشانى *qiʃaani* (also *niʃaani*[↓]) <*Kashan* (in Iran)> /n/ glazed tiles, glazed tiling.

ق ش ح

قشح *·qaʃaḥ (a)* /vt/ to drive away, get rid of. *dahya tiqʃaḥ-u* may a disaster carry him off! - vn *qaʃḥ, qaʃaḥaan*; ava *qaaʃiḥ*; pva *maqʃuuḥ*.

اتقشح *ʔitqaʃaḥ* /vi/ **1** to be driven away. **2** to clear off. *ʔitqiʃiḥ min hina walla ʔandah il-buliis* get out of here or I'll call the police! - ava/iva *mitqiʃiḥ*.

انقشح *ʔinqaʃaḥ* = *ʔitqaʃaḥ*. - ava/iva *minqiʃiḥ*.

ق ش ر

قشر *qaʃar (i)* **1** /vt/ to peel (usually a small area). *ʔiqʃir ḥitta min il-baṭaṭsaaya w-ʃuuf lon-ha min guwwa* peel off a bit of the potato and see what colour it is inside. — /vi/ **2** to peel off. *ʔig-garḥ*[i] *qaʃar li-waḥd-u* the scab came off the wound by itself. **3** to become healthy-looking, put on a glow. - vn *qaʃr, qaʃaraan*; ava *qaaʃir*; pva *maqʃuur*.

قشر *qiʃr* /coll n/ **1** (natural) outer skin or layer. *qiʃr*[i] *baṣal* onion skin. *qiʃr*[i] *samak* fish scale(s). ‖*bi-yimʃi ɛala qiʃr*[i] *beeḍ* (he walks on eggshells) ≈ he's too pernickety about things. - *qiʃr*[i] *bayaaḍ* Lates niloticus, a type of perch found in the Nile. **2** dandruff.

قشرة *qiʃra* /n pl *-aat, quʃuur*/ **1** unit noun of *qiʃr*. *qiʃrit burtuqaan* a piece of orange peel. ‖*qiʃrit il-ʔarḍ* the earth's crust. - *qiʃrit looḥ* and *qiʃrit zind [butcher]* shoulder cut. - *ya daaxil been il-baṣala w-qiʃrit-ha ma-ynuub-ak ʔilla ṣannit-ha [prov]* (you who get between the onion and its skin will only be rewarded by its filthy smell) ≈ don't interfere in others' affairs for you will only cause trouble for yourself. **2a** wood veneer. *ɛamalt il-ʔooḍa b-qiʃra* I had the suite made with veneer. **2b** metal (especially gold) plating. *ʔaswira qiʃra* a gold-plated bracelet. *ʔil-xaatim da miʃ ḥaaga - qiʃra bass* that signet ring isn't much to speak of - it's only plated stuff.

قشراية *ʔiʃraaya* /n pl *-aat*/ a piece of peel.
مقشرة *maqʃara* /n pl *maqaaʃir, maqaaʃir*/ peeler.
قشّر *qaʃʃar* **1** /vt/ to remove the natural outer layer (e.g., peel, hull, skin) of. *hiyya mqaʃʃara l-manga* she has peeled the mangoes. *ʔil-makana bi-tqaʃʃar ir-ruzz* the machine husks rice. ‖ *qaʃʃar-haa-li* he handed it to me peeled (i.e. having done all the preparation, on a silver platter). - *ʔik-koora gat-li mqaʃʃara* the ball came to me nicely set up (for a play). - *(laqit-u) beeḍa mqaʃʃara* (she found him) a push-over. **2** /vi/ to peel. *gild-i bi-yqaʃʃar* my skin is peeling. *ʔil-burunz id-dahabi qaʃʃar min il-birwaaz* the gilt has peeled off the frame. - vn *taqʃiir, taqʃiir*; ava/pva *miqaʃʃar*.
اتقشّر *ʔitqaʃʃar* /vi/ passive of *qaʃʃar*. - iva *mitqaʃʃar*.

ق ش ش [1]
قشّ *qaʃʃ[1]* *(u)* /vt/ **1** to sweep up, sweep away. *quʃʃ il-waraq illi wiqiʕ miʃ-ʃagar* sweep up the leaves that have fallen from the trees. ‖ *dahya tquʃʃ-u-hum* ≈ may disaster take them! **2** to sweep out, sweep clean. ‖ *ʔil-ḥaraami qaʃʃ il-beet* the thief stripped the house bare. - *ʔil-waad yiquʃʃ* jack-takes-all (alternative name for the card game *baṣra* q.v.) — /vi/ **3** to sweep. *quʃʃ[i] taḥt iṭ-ṭarabeeza* sweep under the table! - vn *qaʃʃ, qaʃaʃaan*; ava *qaaʃiʃ*; pva *maqʃuuʃ*.
قشّ *qaʃʃ[2]* /coll n/ **1** straw. **2** dry rubbish, sweepings.
قشّة *qaʃʃa* /unit n, pl *-aat*/ a straw, piece of straw. ‖ *xiyaar qaʃʃa* type of gherkin. - *ʕala ʕeen-ak qaʃʃa [children]* ≈ you're exposed, your private parts are showing.
قشّاية *qaʃʃaaya* = *qaʃʃa*. *ʔil-ɣarqaan yitʕallaq fi-qaʃʃaaya* a drowning man will clutch at a straw.
قشّاش *qaʃʃaaʃ* /adj/ slow, stopping at every station (of a train).
مقشّة *miqaʃʃa* /n pl *-aat*/ broom.
اتقشّ *ʔitqaʃʃ* /vi/ **1** to be swept away. **2** to be swept clean. - iva *mitqaʃʃ*.
انقشّ *ʔinqaʃʃ* = *ʔitqaʃʃ*. - iva *minqaʃʃ*.
قشّش *qaʃʃiʃ* **1** /vt/ to rob, clean out. *qaʃʃiʃuu-ni fik-kutʃiina* they cleaned me out at cards. **2** /vi/ to gather straw or sweepings, collect dry rubbish. ‖ *qaʃʃiʃ ʕala mayyit-ak tisxan [prov]* (gather straw for (the fire under) your water and it will heat) ≈ take care of your affairs if you want them to flourish. - vn *taqʃiiʃ*; ava/pva *miqaʃʃiʃ*.
اتقشّش *ʔitqaʃʃiʃ* /vi/ passive of *qaʃʃiʃ*. - iva *mitqaʃʃiʃ*.

ق ش ش [2]
قشّ *qiʃʃ* /n/ <T *kıç*> *[naut]* stern, after-end of a ship. *kawirtit il-qiʃʃ* the afterdeck.

ق ش ط [1]
قشط *qaʃaṭ* *(u)* /vt/ **1** to scrape off. *ʔuqʃuṭ il-buuya* scrape off the paint! **2** to skim off. *ʔuqʃuṭi r-riim min il-maraqa* clear the scum from the broth. *qaʃaṭt il-qiʃṭa* I skimmed off the cream. **3a** *[metal]* to mill. **3b** *[carp]* to plane. **4** to cut or sharpen (a reed pen). - vn *qaʃṭ, qaʃaṭaan*; ava *qaaʃiṭ*; pva *maqʃuuṭ*.
قشطة *qiʃṭa* /n/ **1a** *[rur]* cream, sour cream. **1b** clotted cream. ‖ *ṣabaaḥ il-qiʃṭa* a very good morning to you! - *sayyid qiʃṭa* hippopotamus. **2** /coll n/ custard apple(s).
قشطاية *qiʃṭaaya* /unit n, pl *-aat*/ a custard apple.
مقشط *maqʃaṭ* /n pl *maqaaʃiṭ*/ long slender knife used to sharpen reed pens.
مقشطة *maqʃaṭa* /n pl *maqaaʃiṭ*/ **1** *[metal]* milling machine. **2** *[carp]* planing machine.
اتقشط *ʔitqaʃaṭ* /vi/ passive of *qaʃaṭ*. - iva *mitqiʃiṭ*.
انقشط *ʔinqaʃaṭ* = *ʔitqaʃaṭ*. - iva *minqiʃiṭ*.
قشّط *qaʃʃaṭ* /vt/ **1** to scrape off. **2a** *[metal]* to mill. **2b** *[carp]* to plane. **3** to rob, strip (one) of one's belongings. *ʔin-naas dool qaʃʃaṭuu-na* those people robbed us blind! - vn *taqʃiiṭ*; ava/pva *miqaʃʃaṭ*.
اتقشّط *ʔitqaʃʃaṭ* /vi/ passive of *qaʃʃaṭ*. - iva *mitqaʃʃaṭ*.

ق ش ط [2]
قشاط *quʃaaṭ, qiʃaaṭ* /n/ **1** /coll n/ pieces, counters, men (in, e.g., backgammon, dominoes). **2** /unit n, pl *-aat, quʃúṭa, qiʃíṭa, ʔiqʃiṭa*/ a piece, a counter, a man (in, e.g., backgammon, dominoes, chess). **3** /pl *-aat*/ leather strap.
قشاطة *quʃaaṭa, qiʃaaṭa* = *quʃaaṭ* 2.

ق ش ع
قشع *qaʃaʕ* *(a)* /vt/ to drive away, kick out. - vn *qaʃaʕaan*; ava *qaaʃiʕ*; pva *maqʃuuʕ*.
اتقشع *ʔitqaʃaʕ* /vi/ **1** to be driven away. **2** to clear off. - ava/iva *mitqiʃiʕ*.

ق ش ع ر
قشعر *qaʃʕar* **1** /vt/ to give goose pimples to, cause to shiver. *ḥiss-u bi-yqaʃʕar-ni* his voice sends shivers down my spine. **2** /vi/ to get goose pimples, shiver. *ʔil-manẓar xallaa-ni ʔaqaʃʕar* the sight made my flesh creep. - vn *qaʃʕara*; ava/pva *miqaʃʕar*.

ق ش ف
قشفة *qiffa* /n pl *qifaf*/ crust (of bread), rind (of hard cheese).
قشف *qafaf* /n/ chapping, roughening.
قشفة *qafafa* /n pl *-aat*/ a small area of chapped skin.

قشفاية *qaʃafaaya* = *qaʃafa*.
قشّف *qaʃʃif* **1** /vt/ to chap. *ʕil-bard qaʃʃif ʕiday-ya* the cold weather chapped my hands. **2** /vi/ to chap, become chapped. ‖*raagil miqaʃʃif* a scruffy-looking man. - vn *taqʃiif*; ava/pva *miqaʃʃif*.
تقشّف *taqaʃʃuf* /n/ austerity (of life-style).

ق ش ف ر
قشفر *qaʃfar* /vt/ *[slang]* to relieve (s.o.) of (all) money. *qaʃfart iz-zibuun* I took the customer to the cleaner's. - also *ʕaʃfar*. - vn *qaʃfara*; ava/iva *miqaʃfar*.
اتقشفر *ʕitqaʃfar* /vi/ passive of *qaʃfar*. - iva *mitqaʃfar*.

ق ش ق ش
قشقش *qaʃqiʃ* /vt/ **1** to gather bits and pieces, collect bits of straw (for, e.g., fire). *daayir yiqaʃqiʃ luqma hina luqma hnaak* he goes around scavenging - (picking up) a bit here, a bit there. **2** to sweep away. *qaʃqiʃu kull illi ḫilt-i* they took all I possessed. - vn *qaʃqaʃa*; ava *miqaʃqiʃ*.
اتقشقش *ʕitqaʃqiʃ* /vi/ passive of *qaʃqiʃ*. - iva *mitqaʃqiʃ*.

ق ش ل
قشلان *qaʃlaan* /adj */ broke, penniless.
قشل *qaʃal* /n/ pennilessness, penury.
قشّل *qaʃʃil* **1** /vt/ to render destitute or penniless. *miraat-u mqaʃʃilaa ʕawwil bi-ʕawwil* his wife keeps him steadily broke. **2** /vi/ to become broke, become penniless. - vn *taqʃiil*; ava/pva *miqaʃʃil*.
اتقشّل *ʕitqaʃʃil* /vi/ passive of *qaʃʃil* 1. - iva *mitqaʃʃil*.

ق ش ل ا ق
قشلاق *quʃlaaq* <T *kışlak*> /n pl *-aat*/ *[mil]* barracks. *ḥabs quʃlaaq [mil]* confinement to barracks.

ق ش م
قشيم *qaʃiim* /n/ frizzled bits which remain after fat (especially sheep's tail) is rendered down and strained off for cooking (eaten with bread).

ق ش ن see ق ش ا ن : *qiʃaani*

ق ص ا ج
قصاج *quṣaag* <T *kısaç*> /n pl *-aat*/ (watchmaker's) pliers, pair of pincers.

ق ص ب
قصب *qaṣab* /coll n/ **1a** sugar cane. **1a** (loosely) cane, reed(s). **2** gold or silver thread, (loosely) gold braid, gold brocade.
قصبة *qaṣaba* /n pl *-aat, ʕaqṣaab, ʕiqṣaab, qiṣaab*/ **1** /unit n/ a piece of sugar cane, a reed. ‖*gat-ak qaṣaba* ≈ may you be impaled! **2** any of various objects resembling a piece of cane. *qaṣabit (ir-rigl)* (1) shin-bone. (2) cannon bone. *qaṣabit burquɛ [obsol]* metal (usually gold) nose-piece of a face-veil (see Pl.F, 7). **3** linear measure equal to 3.55 metres.
قصّابيّة *qaṣṣabiyya* /n pl *-aat, -aat*/ **1** *[agric]* sled-like implement drawn by an animal and used to skim off top-soil (see Pl.D, 7). **2** nose-piece of a camel halter.
قصّب *qaṣṣab* /vt/ **1** to skim top-soil off (land) with an *qaṣṣabiyya*. **2** to measure (land) in 3.55 metre lengths. - vn *taqṣiib*; ava/pva *miqaṣṣab*.
اتقصّب *ʕitqaṣṣab* /vi/ **1** to be skimmed with an *qaṣṣabiyya* (of land). **2** to be measured in 3.55 metre lengths. - iva *mitqaṣṣab*.

ق ص ج see ق ص ا ج : *quṣaag*

ق ص د
قصد *qaṣad (u)* /vt/ **1** to intend, mean. *bi-yuqṣud ʕeeh* what does he mean? *ma-qaṣadt-ʃ ḫaaga* I had no (evil) intention. - /as preverb/ *ma-qaṣadt-ʃ ʕazaɛɛal-hum* I didn't mean to upset them. **2a** to go in the direction of, aim for. *qaṣad beet-u* he made for his house. **2b** to make an approach to (s.o.). *qaṣad-ni f-naṣiiḥa* he came to me for advice. - vn *qaṣd, qaṣadaan*; ava *qaaṣid*; pva *maqṣuud*.
قصد *qaṣd* /n/ intention, purpose. *qaṣd-ak ʕeeh biz-zabṭ* what exactly are you getting at? ‖*bi-qaṣd ʕinn* ... in order that .... - *bil-qaṣd* intentionally, on purpose. - *bi-duun qaṣd* unintentionally. - *ʕil-qaṣd* in short, to be brief.
قصاد *quṣaad* /prep/ **1** opposite, across from. *ʕig-gaar illi saakin quṣadna* the neighbour living across from us. **2** in return for, in exchange for. *xadt xamsiin qirf quṣaad il-xidma lli ɛamalt-haa-lu* I got fifty piastres for the service I did him. ‖*di quṣaad di* tit for tat.
قصيد *qaṣiid*↑ : *beet il-qaṣiid* the main point, the essence.
قصيدة *qaṣiida* /n pl *qaṣaayid*/ poem. ‖*ʕawwil il-qaṣiida kufr* ≈ it's off to a bad start!
مقاصد *maqaaṣid: rabb-i-na ynaggaḥ maqaṣd-ak [beggars]* God grant you success in your aims!
اتقصد *ʕitqaṣad* /vi/ to be approached (for some purpose). *ʕitqaṣad fi-gmiil* he was asked for a favour. - iva *mitqiṣid*.
انقصد *ʕinqaṣad* = *ʕitqaṣad*. - iva *minqiṣid*.
اتقصّد *ʕitqaṣṣad* /vt/ to single out for harassment, plague. *ʕil-mudarris dayman mitqaṣṣad-ni* the teacher is

always picking on me. - ava *mitqaṣṣad*.

اقتصد *ʔiqtaṣad*↑ /vi/ to economize. *ʔiqtaṣad fi-maṣariif-u* he cut back his spending. - vn *ʔiqtiṣaad*; ava *muqtaṣid*.

اقتصاد *ʔiqtiṣaad* /n/ **1** economy. *ʔiqtiṣaad il-balad* the economy of the country. **2** economics. *bi-yidris ʔiqtiṣaad* he's studying economics.

اقتصادى *ʔiqtiṣaadi* /adj */ **1** economical. *ʕarabiyya qtiṣadiyya* an economical car. **2** economic. *mafaakil ʔiqtiṣadiyya* economic problems.

استقصد *ʔistaqṣad* = *ʔitqaṣṣad*. - vn *ʔistiqṣaad*; ava *mistaqṣad*.

ق ص د ى ر

قصدير *qaṣdiir* <Gr *kassiteros*> /n/ **1** soldering alloy (made up of two parts lead and one part tin). **2** tin. - also *qazziir*.

ق ص ر ¹

قصر *qiṣir, quṣur (a)* /vi/ to become short, shorten. *ʔin-nahaar bi-yiqṣar fif-fita* the daytime shortens in winter. - vn *quṣr*; ava *qaaṣir*.

قصر *qaṣar (i)* **1** /vt/ to limit, cause to fall short. *qaṣart rigl-i ʕanhum* (or *min ʕanduhum*) I didn't visit them. *qaṣar if-farr* he didn't let the trouble develop. **2** /vi/ to become reduced (of liquid, from evaporation). *ʔil-maraqa qaṣarit min il-ɣaliyya* the broth has boiled down. - vn *qaṣr, quṣr*; ava *qaaṣir*; pva *maqṣuur*.

¶ *qaṣar li-* (1) to put on a short leash, limit the freedom of action of. (2) to be brusque or curt with (s.o.).

قصر *quṣr* /n/ shortness. *quṣr deel (ya ʔazʕar) [prov]* ≈ sour grapes. ‖ *quṣr ik-kalaam* and *quṣr-u* ≈ to cut a long story short.

قاصر *qaaṣir* /n * and pl *quṣṣar/ [leg]* minor.

مقصورة *maqṣuura* /n/ enclosure to which only a specific category of spectators is admitted (e.g., that containing the best seats in a stadium, the reviewing box at a parade, section for women in a mosque). *ʔil-maqṣuura l-malakiyya* the royal box (e.g., in a theatre).

قصور *quṣuur* /n/ negligence, laxness.

قصير *qaṣiir, qaṣiir*↑ /adj pl *quṣaar/* = *quṣayyar*. ‖ *gab-ha min qaṣir-ha* to cut the matter short, as in *badal ma yḍayyaʕ waqt-u gab-ha min qaṣir-ha w-dafaʕ* rather than waste his time he cut things short and paid.

قصيّر *quṣayyar* /adj * and pl *quṣaar/* short. *naẓar quṣayyar* short sight.

أقصر *ʔaqṣar* /el/ shorter/shortest.

اتقصر *ʔitqaṣar* /vi/ passive of *qaṣar*. - iva *mitqiṣir*.

انقصر *ʔinqaṣar* = *ʔitqaṣar*. - iva *minqiṣir*.

قصّر *qaṣṣar* /vt/ **1** to shorten. *ʔil-fustaan ʕaayiz taqṣiir* the dress needs shortening. ‖ *qaṣṣar raqabt(-u)* to cause (s.o.) to lose dignity, as in *suquuṭ-u qaṣṣar riqabt-i quddaam in-naas* his failing (the exams) put me to shame in front of everyone. — /vi/ **2** to become scarce, run short. *ʔil-mayya qaṣṣarit ʕandina* we've run short of water. **3** to be remiss or negligent (especially in one's obligations to one's fellow human beings). *hiyya bi-tqaṣṣar fil-waagib maʕa ʕelit-ha* she neglects her family obligations. **4** to fail to pass or graduate. *huwwa qaṣṣar is-sana lli faatit* he flunked last year. - vn *taqṣiir*; ava *miqaṣṣar*.

اتقصّر *ʔitqaṣṣar* /vi/ to be shortened (of a dress, a rope etc.). - iva *mitqaṣṣar*.

اقتصر *ʔiqtaṣar* /vi/ **1** to limit oneself, restrict oneself. *ʔiqtiṣir ʕanhum* keep away from them! ‖ *ʔil-iqtiṣaar ʕibaada [prov]* keeping oneself to oneself is (tantamount) to worship (of God). **2**↑ to be limited, be restricted. *ʔil-ḥafla qtaṣarit ʕala l-qaraayib* the party was restricted to relatives. - vn *ʔiqtiṣaar*; ava *miqtiṣir*.

استقصر *ʔistaqṣar* /vt/ **1** to consider (too) short. *rafaḍit tiggawwiz-u ʕaʃaan mistaqṣaraa* she refused to marry him because she thought him too short. **2** to select for shortness. - vn *ʔistiqṣaar*; ava *mistaqṣar*.

² (ق ص ر)

قصر *qaṣr* /n pl *quṣuur*/ palace. ‖ *ʔil-qaṣr* or *qaṣr il-ʕeeni* Kasr el-Aini, a large government teaching hospital.

قصريّة *qaṣriyya* /n pl *-aat, qaṣaari/* **1** flower or plant pot. **2** chamber-pot, bedpan.

الأقصر *ʔil-ʔuqṣur, l-uqṣur* /prop n/ Luxor.

ق ص ر م لِ

قصرمل *quṣrumill, quṣrimill* /n/ mortar made of ashes, dirt, lime and sand.

ق ص ص ¹

قصّ *qaṣṣ¹ (u)* /vt/ **1** to cut. *qaṣṣ-i-li nigma waraq* he cut me out a paper star. *qaṣṣeet faʕr-i* (1) I had my hair cut. (2) I cut my (own) hair. ‖ *makaroona maqṣuuṣa* macaroni. - *quṣṣ (ik-kutfiina)* cut the cards! - *qaṣṣ¹ min* ... to deduct from (s.o.'s salary etc.), as in *bi-yquṣṣu min mahiyyit-u mablaʁ kibiir* they deduct a large sum from his salary. **2** to shear, clip. *bi-yiigi marriteen fis-sana yquṣṣ il-xeel* he comes twice a year to clip the horses. - vn *qaṣṣ, qaṣaṣaan*; ava *qaaṣiṣ*; pva *maqṣuuṣ*.

قصّة *qaṣṣa* /pl *-aat/* instance noun of *qaṣṣ*. *quul lil-ḥallaaq il-qaṣṣa lli-nta ʕawiz-ha* tell the barber the kind of cut you want.

مقصوص *maqṣuuṣ* /n pl *maqaṣiiṣ/* lock of hair in front of the ear, pin curl in front of the ear (properly affected in traditional society only by a married woman).

مقصوصة *maqṣuuṣa* /n pl *-aat*/ broad straining spoon.

قصّة *quṣṣa* /n pl *quṣaṣ*/ **1a** hair cut over the forehead in bangs, fringe. **1b** (bird's) cere. **2** brow-band (of a bridle).

قصاصة *quṣaaṣa* /n pl *-aat*/ small bit or scrap (usually of paper).

قصّاص *qaṣṣaaṣ*[1] /n */ clipper, one who shears animals.

مقصّ *maqaṣṣ* /n pl *-aat*/ **1** pair of scissors. *maqaṣṣ*[i] *mfarfar* (1) pinking shears. (2) thinning scissors. **2a** any of various implements which operate like a pair of scissors (e.g., crucible tongs). *maqaṣṣ*[i] *makwa* curling (or straightening) tongs. **2b** any of various shapes resembling an open pair of scissors (e.g., crossed staff and sword insignia worn by a major-general or brigadier-general). **3** *[mech]* shears (apparatus for hoisting heavy weights). **4** *[soccer]* angle formed by the top of the goal frame and the side post. **5** tripping technique. *xad-ni maqaṣṣ* he tripped me.

مقصّى *maqaṣṣi* /adj */ scissored, scissor-style. *ʃiṭ-ṭariiqa l-maqaṣṣiyya fil-wasb il-ɛaali* the scissor-style high jump.

اتقصّ *ʃitqaṣṣ*[1] /vi/ **1 to be cut.** **2** to be sheared, be clipped. -iva *mitqaṣṣ*.

انقصّ *ʃinqaṣṣ*[1] = *ʃitqaṣṣ*[1]. -iva *minqaṣṣ*.

قصّص *qaṣṣaṣ* /vt/ **1** to cut up (in pieces). *laqeet il-waad miqaṣṣaṣ fustaan-i* I found the kid had cut up my dress! **2** to pluck (feathers from live fowl to prevent their flying). -also *qaṣqaṣ*. -vn *taqṣiiṣ*; ava/pva *miqaṣṣaṣ*.

اتقصّص *ʃitqaṣṣaṣ*[1] /vi/ passive of *qaṣṣaṣ*. -iva *mitqaṣṣaṣ*.

ق ص ص [2]

قصّ *qaṣṣ*[2] *(i)* /vt/ to tell, recount (a story, anecdote etc.). *qaṣṣ*[a] *ɛalayya kull il-mawḍuuɛ* he told me the whole story. -ava *qaaṣiṣ*.

قصّة *qiṣṣa, qiṣṣa*↑ /n pl *qiṣaṣ, qiṣaṣ*/ story, tale. ‖ *ʃeeh qiṣṣit-ak* what's the matter with you?

اتقصّ *ʃitqaṣṣ*[2] /vi/ to be told, be recounted. -iva *mitqaṣṣ*.

انقصّ *ʃinqaṣṣ*[2] = *ʃitqaṣṣ*[2]. -iva *minqaṣṣ*.

اتقصّص *ʃitqaṣṣaṣ*[2] **1** /vt/ to seek out information about (s.o. or s.th.). *bi-nitqaṣṣaṣ ʃaxbaar il-ɛaduw* we try to find out secretly all about the enemy. **2** /vi/ to spy out. *ʃibɛat waaḥid yitqaṣṣaṣ ɛaleehum* send someone to keep (secret) watch on them. -ava *mitqaṣṣaṣ*.

ق ص ص [3]

قصّص *qaṣṣ*[3] *(u)* /vt/ to follow (a track). *ʃil-badw*[i] *mafhuriin bi-qaṣṣ il-ʃasar* the bedouin are famous for tracking. -vn *qaṣṣ, qaṣaṣaan*; ava *qaaṣiṣ*.

قصّاص *qaṣṣaaṣ*[2]: *qaṣṣaaṣ ʃasar* /pl *qaṣṣaṣiin ʃasar*/ tracker.

اتقصّ *ʃitqaṣṣ*[3] /vi/ to be followed, (of a track). -iva *mitqaṣṣ*.

ق ص ص [4]

قصاص *qiṣaaṣ* /n/ punishment, penalty (particularly hanging for murder).

اقتصّ *ʃiqtaṣṣ* /vi/ to exact punishment. *rabb-i-na yiqtaṣṣ*[i] *minhum ɛa-lli ɛamaluu fiina* may God punish them for what they did to us! -iva *miqtaṣṣ*.

ق ص ع

قصع *qaṣaɛ (a)* /vt/ **1** to sprain. *qaṣaɛt*[i] *rigl-i* I sprained my ankle. *ʃil-hudr*[i] *qaṣaɛ rigl-i* the fall sprained my ankle. **2** to bend (part of the body); cock (the head) to one side. *qaaɛid maqṣuuɛ ɛak-kursi* sitting sprawled on the chair. ‖ *qaṣaɛit id-diḥka* she laughed saucily. — /vi/ **4** to be or become excessive (of sweetness or saltiness in food). *ḥuduqiyyit ir-ruzz*[i] *qaṣaɛit* or *ʃir-ruzz*[i] *qaṣaɛ bil-ḥuduqiyya* the rice was very salty. -vn *qaṣɛ, qaṣaɛaan*; ava *qaaṣiɛ*; pva *maqṣuuɛ*.

قصعة *qaṣɛa* /n pl *-aat, quṣaɛ*/ **1** instance noun of *qaṣɛ*. **2** bowl or basin without a base (especially that used to carry mortar). ‖ *qaṣɛit is-sarg* the seat of the saddle. **3** sound box, body of a musical instrument. *qaṣɛit ɛuud* belly of a *ɛuud* (see Pl.J, 15).

اتقصع *ʃitqaṣaɛ* /vi/ passive of *qaṣaɛ*. -iva *mitqiṣiɛ*.

اتقصّع *ʃitqaṣṣaɛ* /vi/ to move one's body voluptuously. *mafya titqaṣṣaɛ* she walks along swinging her hips. -vn *taqṣiiɛ*; ava *mitqaṣṣaɛ*.

ق ص ف

قصف *qaṣaf (u)* /vt/ to snap (in two), break (off). *qaṣaf il-qalam* he broke the pencil. ‖ *ʃil-moot qaṣaf fabaab-u* death cut him down in his prime. -*(ʃallaah) yuqṣuf ɛumr-ak* ≈ God strike you dead! -*waad maqṣuuf ir-raqaba* brat, devil of a kid. -vn *qaṣf, qaṣafaan*; ava *qaaṣif*; pva *maqṣuuf*.

قصّافة *qaṣṣaafa* /n pl *-aat*/ **1** pair of heavy-duty shears, pair of wire or cable cutters. **2** pair of clippers. *qaṣṣaafit ḍawaafir* nail clippers.

اتقصف *ʃitqaṣaf* /vi/ to be snapped (in two), be broken (off). -iva *mitqiṣif*.

انقصف *ʃinqaṣaf* = *ʃitqaṣaf*. -iva *minqiṣif*.

قصّف *qaṣṣaf* /vt/ to cause to be broken (completely or successively). *ʃil-makwa bi-tqaṣṣaf if-faɛr* using curling tongs breaks the hair. -vn *taqṣiif*; ava/pva *miqaṣṣaf*.

اتقصّف *ʃitqaṣṣaf* /vi/ to be broken (off, completely or successively). -iva *mitqaṣṣaf*.

ق ص ق ص

قصقص *qaṣqaṣ* /vt/ **1a** to snip into small pieces. **1b** to trim, clip. *ḍawafir-ha mqaṣqaṣa* her nails are trimmed. **2** to pluck (feathers) from live fowl to prevent their flying. ‖ *qaṣqaṣi ṭeer-ik la yluuf bi-ṛeer-ik [prov]* clip your bird's wings if you want him to stay home (advice to women to keep their husbands short of money). - also *qaṣṣaṣ*. - vn *qaṣqaṣa*; ava/pva *miqaṣqaṣ*.

قصقوصة *qaṣquuṣa* /n pl *qaṣaqiiṣ*/ strip or scrap (usually of cloth).

اتقصقص *ʔitqaṣqaṣ* /vi/ passive of *qaṣqaṣ*. - iva *mitqaṣqaṣ*.

ق ص ل

قصل *qaṣal* = *qaṣala*.

قصلة *qaṣala* /coll n/ knotty parts of stalks of wheat and barley separated out during winnowing and used for fuel.

قصلاية *qaṣalaaya* /pl *-aat*/ unit noun of *qaṣala*.

مقصلة *maqṣala* /n pl *maqaaṣiil*/ guillotine.

ق ص و ل

قصول *qaṣwal* /vt/ **1** to deduct unjustly from (a sum of money). **2** to rob, ruin (s.o.) financially by cheating. - vn *qaṣwala*; ava/pva *miqaṣwal*.

اتقصول *ʔitqaṣwal* /vi/ passive of *qaṣwal*. - vn *tiqaṣwiil*; iva *mitqaṣwal*.

ق ص ى

أقصى *ʔaqṣa, ʔaqṣa* /el/ more/most extreme. *ʔana zaɛlaan minnu l-ʔaqṣa ḥadd* I am as angry as can be with him. ‖ *ʔil-masgid il-ʔaqṣa* the principal mosque in Jerusalem. - *ʔif-ʃarq il-ʔaqṣa* the Far East. - *ʔil-maṛṛib il-ʔaqṣa* Morocco.

اتقصّى *ʔitqaṣṣa* /vt/ to investigate thoroughly, make a thorough enquiry about. *dayman yitqaṣṣa l-ʔaxbaar* he always enquires extensively about the news. - ava *mitqaṣṣi*.

استقصى *ʔistaqṣa* /vt/ to investigate thoroughly, make a thorough inquiry about. *ruuḥ istaqṣa ʔaxbar-hum* go and make thorough inquiries about them. - vn *ʔistiqṣa*; ava *mistaqṣi*.

¶ *ʔistaqṣa ɛan* to inquire about or into, as in *qaɛadna mudda nistaqṣa ɛan beet-u* we spent a lot of time trying to find out where he lived.

ق ض ب

قضيب *qaḍiib* /n pl *quḍbaan*/ **1a** metal rod, bar. *qaḍiib il-qaṭr* rail (of a railway). **1b** railing. **2** *[text]* **2a** hank of about five-hundred cotton threads. **2b** twill stripe. **3** *[euphem]* penis.

قضّب *qaḍḍab* /vt/ to strip (s.th.) bare. ‖ *ʔil-ɛiyaal iʃ-ʃahr*^{i} *da qaḍḍabuu-ni* the children left me flat broke this month. - vn *taqḍiib*; ava/pva *miqaḍḍab*.

اتقضّب *ʔitqaḍḍab* /vi/ to be stripped bare. - iva *mitqaḍḍab*.

ق ض ض

انقضّ *ʔinqaḍḍ, ʔinqaḍḍ*$^{\uparrow}$ /vi/ to pounce. *ʔil-buliiṣ inqaḍḍ*^{a} *ɛala l-ḥaramiyya* the police pounced on the thieves. - vn *ʔinqiḍaaḍ*; ava *minqaḍḍ*.

ق ض ى

قضى *qaḍa*^{1} *(i)* /vt/ **1** to attend to, carry out. *ṭalab-ak maqḍi* your request is taken care of. *bi-tiqḍi mifwaar* she's on an errand. *ʔaqḍi ḥagt-i b-ʔiid-i wala ʔaquul lil-kalb*^{i} *ya siid-i [prov]* ≈ better help yourself than grovel for a dog's help. **2** to spend (time). *qaḍeena ʃahr*^{i} *b-ṭuul-u f-bariis* we spent a whole month in Paris. **3** *[Isl]* to compensate for, make up for (a missed religious obligation). - vn *qaḍa, qaḍayaan*; ava *qaaḍi*; pva *maqḍi*.

¶ *qaḍa ɛala* to make an end of. *qaḍa ɛal-ʔakl* he polished off the food. *qaḍeet ɛalee* I finished him off, I did him in. ‖ *ḍarba qaḍya* knockout (blow).

قضاء *qaḍa*^{2} /n/ **1** fate. ‖ *qaḍa ʔaxaff*^{i} *min qaḍa* ≈ (1) it could have been worse. (2) the lesser of two evils. **2** judicature. **3** *[Isl]* compensation for missed prayer or fasting.

قضاء *qaḍaaʔ* /n/ **1** fate. ‖ *qaḍaaʔ wi-qadar* as a matter of fate, as an act of God, as in *ʔil-ḥadsa ḥaṣalit qaḍaaʔ wi-qadar* the accident was totally unavoidable. **2** judgement. ‖ *ʔil-qaḍaaʔ il-ɛaali* the High Court. **3** jurisprudence.

قضائى *qaḍaaʔi*$^{\uparrow}$ /adj */ judicial. *ʔiḍ-ḍabṭ il-qaḍaaʔi [leg]* the right of apprehension.

قاضى *qaaḍi* /n pl *quḍaah*/ judge. *ʔil-faaḍi yiɛmil qaaḍi [prov]* ≈ idle people occupy themselves by interfering in others' affairs. ‖ *luqmit il-qaaḍi* see *luqma*.

قضيّة *qaḍiyya* /n pl *qaḍaaya, qawaaḍi*/ law-suit, court case.

مقضى *muqḍa: ma-fii-ʃ waraa muqḍa ḥaaga* you can't get (him) to do anything.

اتقضى *ʔitqaḍa* /vi/ passive of *qaḍa*^{1}. - iva *mitqiḍi*.

انقضى *ʔinqaḍa* /vi/ **1** = *ʔiqaḍa*. **2** to elapse. *ʔil-ḥikaaya di nqaḍa ɛaleeha ktiir* that affair is way in the past. - ava/iva *minqiḍi*.

قضّى *qaḍḍa* /vt/ **1** to attend to, carry out. *qaḍḍa maṣlaḥit-hum* he attended to their interests. **2** to spend

(time). *qaḍḍa sanateen fiṣ-ṣaḥra* he spent two years in the desert. **3** to suffice for. *ʔil-qumaaʃ ḥa-yqaḍḍi fustaan* the material will be enough for a dress. *ʔil-filuus miʃ miqaḍḍiyyaa-ni* the money does not meet my needs. — /vi/ **4** to last, suffice. *ʔil-mayya miʃ ḥa-tqaḍḍi l-bukra* the water won't be enough to last until tomorrow. - vn *taqḍiyya*; ava/pva *miqaḍḍi*.

اتقضى *ʔitqaḍḍa* /vi/ passive of *qaḍḍa*. - iva *mitqaḍḍi*.

قاضى *qaaḍa* /vt/ to arraign (s.o. before a judge). *ʔana ḥ-aqaḍii-k quddaam il-maḥkama* I'll take you to court. - vn *miqaḍiyya*; ava *miqaaḍi*.

اتقاضى *ʔitqaaḍa* /vi/ to be arraigned. - iva *mitqaaḍi*.

اقتضى *ʔiqtaḍa* /vt/ to require. *bi-yiqtiḍi ʃuvl[1] ktiir* it calls for a lot of work. - ava *miqtiḍi*.

مقتضى *muqtaḍa: bi-muqtaḍa* according to, in accordance with.

مقتضيات *muqtaḍayaat, muqtaḍayaat* /pl n/ requirements, needs. *ḥasab muqtaḍayaat il-ʔaḥwaal* according to the dictates of circumstances.

استقضى *ʔistaqḍa* /vt/ **1** to acquire. *raaḥit tistaqḍa xuḍaar mis-suuq* she went to get vegetables from the market. **2** to prevail upon (s.o.) to do (s.th.). *m-aqdar-ʃ astaqḍaa ḥaaga* I can't get him to do anything. - vn *ʔistiqḍa*; ava *mistaqḍi*.

ق ط ا ن

قيطان *quṭaan, qiṭaan* <T *kaytan*> /n pl *qiṭína*/ cord, piping, edging.

[1] ق ط ب

قطب *qaṭab (u)* /vt/ **1** to make a tuck in, sew a fold in (a garment etc.). *qaṭabit deel fustan-ha ɛafaan tiqaṣṣar-u* she made a tuck in the hem of her dress to make it shorter. **2** to section off. *mumkin nuqṭub ḥitta mil-ʔooḍa w-niɛmil-ha maxzan* we can section off a part of the room and make it a store. - vn *qaṭb, qaṭabaan*; ava *qaaṭib*; pva *maqṭuub*.

¶ *qaṭab ɛala* to corner, harass. *ʔana ʃuft-ak lamma qaṭabt[a] ɛal-bint[i] fif-faariɛ* I saw you when you cut in on the girl in the street.

قطبة *qaṭba* /n pl *-aat*/ **1** fold, tuck (in a garment etc.). *ɛafaan tiṭawwili l-fustaan fukki qaṭbit id-deel* in order to make the dress longer, let down the hem. **2** sectioned-off part (e.g., of a room).

اتقطب *ʔitqaṭab* /vi/ passive of *qaṭab*. - iva *mitqiṭib*.

انقطب *ʔinqaṭab* = *ʔitqaṭab*. - iva *minqiṭib*.

قطّب *qaṭṭab* /vt/ **1** to sew folds in (e.g., several garments). ‖ *qaṭṭab ḥawagb-u* he knitted his eyebrows. **2** to section off parts in (several rooms). **3** to patch (a wall) with plaster. *sadd if-fanaayiʃ wi-qaṭṭab il-bayaaq* he plugged up the holes in the wall and patched it with plaster. — /vi/ **4** *[constr]* to put plaster patching (around a door- or window-frame, to make it flush with the wall). *ɛaawiz taqṭiib ɛala ʃ-ʃababiik* the window-frames need plaster patching. - vn *taqṭiib*; ava/pva *miqaṭṭab*.

[2] ق ط ب

قطب *quṭb, quṭb* /n pl *ʔaqṭaab*/ **1** axis, pole. **2** *[Isl]* high rank in the Sufi hierarchy.

قطبى *quṭbi, quṭbi* /adj/ polar. *ʔin-nigm il-quṭbi* the Pole Star.

[1] ق ط ر

قطر *qaṭar[1] (u)* /vt/ **1a** to tow. *qaṭaru l-ɛarabiyya lil-warʃa* they towed the car to the garage. **1b** to hitch, couple. *sawwaaq il-luuri qaṭar il-maqṭuura* the lorry-driver hitched up the trailer. **2** to trail. *ḥadd[i] qaṭar-ak* did anyone follow you? - vn *qaṭr, qaṭaraan*; ava *qaaṭir*; pva *maqṭuur*.

قطر *qaṭr* /n pl *quṭuraat, quṭúra*/ railway train. ‖ *fat-ha l-qaṭr* ≈ she's missed the (marriage) boat, she's on the shelf. - *faat-u l-qaṭr* he missed his chance.

مقطورة *maqṭuura* /n pl *maqaṭiir*/ **1** trailer. **2** *[coarse]* whore, hooker.

قطر *quṭr↑, qúṭr↑* /n pl *ʔaqṭaar, ʔaqṭaar*/ **1** diameter. *nuṣṣ[i] quṭr* radius. **2** country, land. *ʔil-quṭr il-maṣri* Egypt. *gamiiɛ il-quṭr* the whole country.

قطار *qiṭaar↑* /n pl *-aat*/ railway train.

اتقطر *ʔitqaṭar[1]* /vi/ passive of *qaṭar[1]*. - iva *mitqiṭir*.

انقطر *ʔinqaṭar[1]* = *ʔitqaṭar[1]*. - iva *minqiṭir*.

قطّر *qaṭṭar[1]* /vt/ to tow. - vn *taqṭiir, taqṭiir*; ava/pva *miqaṭṭar*.

اتقطّر *ʔitqaṭṭar[1]* /vi/ to be towed. - iva *mitqaṭṭar*.

[2] ق ط ر

قطر *qaṭar[2] (u)* **1** /vt/ to drip. *gism-i b-yuqṭur ɛaraq* my body is running with sweat. **2** /vi/ *[med]* to administer eye-drops. *xallii yuqṭur-lak mil-qaṭra di* get him to administer those eye-drops to you. - vn *qaṭr, qaṭaraan*; ava *qaaṭir*; pva *maqṭuur*.

قطرة *qaṭra* /n/ **1** /pl *-aat*/ drop. **2** /pl *quṭar*/ eye-drops.

قطّارة *qaṭṭaara* /n/ **1** (eye- or nose-) dropper. **2** *[chem]* pipette.

القطّارة *ʔil-qaṭṭaara: munxafaḍ il-qaṭṭaara* the Qattara depression, in the Egyptian western desert.

اتقطر *ʔitqaṭar[2]* /vi/ passive of *qaṭar[2]*. - iva *mitqiṭir*.

انقطر *ʔinqaṭar[2]* = *ʔitqaṭar[2]*. - iva *minqiṭir*.

قطّر *qaṭṭar[2]* **1** /vi/ to administer eyedrops. ‖ *bi-yqaṭṭar-li bil-qaṭṭaara* ≈ he's very stingy with me. **2** /vt/ **2a** to drip,

cause to drip. **2b** to distil. *mayya mqaṭṭara* distilled water. - vn *taqṭiir, taqṭiir*; ava/pva *miqaṭṭar*.
اتقطّر ʔitqaṭṭar[2] /vi/ passive of *qaṭṭar*[2]. - iva *mitqaṭṭar*.

ق ط ر ن

قطران *qaṭraan, qiṭraan* /n/ tar. ‖*ḥaẓẓ-i ṭiin wi-qaṭraan* my luck is rotten.
قطرن *qaṭran* **1** /vt/ **1a** to coat with tar. **1b** to cause to be awful or loathsome. *qaṭranit ɛiʃt-i* she's ruined my life! **2** /vi/ to become awful or loathsome. *mazaag-u miqaṭran* he's in a filthy mood! - vn *qaṭrana*; ava/pva *miqaṭran*.
اتقطرن ʔitqaṭran /vi/ to become or be made awful. *ɛiʃt-u tqaṭranit min yoom ma ɣawa l-qumaar* ≈ he's ruined himself since he fell for gambling. - ava/iva *mitqaṭran*.

ق ط ش

قطش *qaṭaʃ (u)* /vt/ to chop off. *fil-ḥuruub zamaan kaanu yiqṭuʃu wdaan wi-manaxiir il-ʔasra* in wars long ago they used to chop off the captives' ears and noses. - vn *qaṭʃ, qaṭaʃaan*; ava *qaaṭiʃ*; pva *maqṭuuʃ*.
أقطش ʔaqṭaʃ /adj, fem *qaṭʃa*, pl *quṭʃ*/ mutilated by amputation (particularly of ears and noses).
اتقطش ʔitqaṭaʃ /vi/ to be chopped off. - iva *mitqiṭiʃ*.
انقطش ʔinqaṭaʃ = ʔitqaṭaʃ. - iva *minqiṭiʃ*.
قطّش *qaṭṭaʃ* /vt/ to chop off (repeatedly, collectively or successively). - vn *taqṭiiʃ*; ava/pva *miqaṭṭaʃ*.
اتقطّش ʔitqaṭṭaʃ /vi/ passive of *qaṭṭaʃ*. - iva *mitqaṭṭaʃ*.

ق ط ط [1]

قطّ *qaṭṭ (u)* /vt/ **1** to nip off, cut off with a neat single movement. *yiquṭṭ il-qalam bi-zawya munasba l-nooɛ il-xaṭṭ* he cuts the (nib of the reed) pen to an angle suitable for the type of script. **2** to take a quick nip at. ‖*qaṭṭ[i] boosa min xadd-a-ha* he gave her a quick kiss on the cheek. **3** *[soccer]* to foil (an opponent's tackle) with a sudden feint. - vn *qaṭṭ, qaṭaṭaan*; ava *qaaṭiṭ*; pva *maqṭuuṭ*.
قطّة *qaṭṭa* /n pl *-aat*/ **1** instance noun of *qaṭṭ*. **2** sideburns.
مقطّ *maqaṭṭ* /n pl *-aat*/ bit of bone or stone on which the nib of a reed pen is cut.
انقطّ ʔitqaṭṭ /vi/ passive of *qaṭṭ*. - iva *mitqaṭṭ*.

ق ط ط [2]

قطّ *quṭṭ* /n pl *quṭaṭ*/ tom cat. *ɣaab il-quṭṭ ilɛab ya faar [prov]* when the cat's away the mice will play. ‖*beeni w-beenu ma been il-quṭṭ[i] wil-faar* ≈ we're natural enemies. - *gibna f-siirit il-quṭṭ[i] ga ynuṭṭ [prov]* ≈ talk of the Devil! - *quṭṭ-u gamal [prov]* ≈ all his geese are swans.
قطّة *quṭṭa* /n pl *quṭaṭ, quṭṭaat*/ female cat, (loosely) any cat.
قطيطة *qiṭeeṭa* /n pl *qaṭaayiṭ*/ kitten. *ya qteeṭa ɣassili wiff-ik [children]* wash your face, kitty!

ق ط ع

قطع *qaṭaɛ (a)* /vt/ **1** to cut (up), tear (up). *qaṭaɛ il-ḥabl* he cut the rope. *qaṭaɛ is-sadd[a] ɛaʃaan yiftaḥ ɛal-mayya* he breached the obstruction to open the way for the water. ‖*qaṭaɛ ik-koora* to slice the ball (in ping-pong) (cf sense 3). - *qaṭaɛ ik-kutʃiina* to cut the pack (of cards). - *la yiqṭaɛ ɛirq[i] wala ysayyaḥ damm* ≈ he's indecisive. - *qaṭaɛ ziriiba [rur]* to clean up an animal pen by cutting and removing from it blocks of earth mixed with dung (for use as fertilizer). **2a** to sever and remove. *qaṭaɛu draaɛ-u* they amputated his arm. *xalli g-gazzaar yiqṭaɛ-lak kiilu laḥma* have the butcher cut you a kilo of meat. *ʔiqṭaɛ-li waraqa min id-daftar* tear me out a page from the notebook. *qaṭaɛna kull[i] waraqa ɛaleeha luṭaɛ* we plucked every leaf that had egg-clusters on it. ‖*maqṭuuɛ min ʃagara* cut off from, or without, family or friends. - *ʔiqṭaɛ lisaan-ak* shut up! **2b** *[Chr]* to excommunicate. **3** to suspend and terminate. *qaṭaɛu l-mayya ɛaʃaan taṣliiḥ iṭ-ṭurumba* they cut off the water to repair the pump. *qaṭaɛ mahiyyit-i* he cut off my salary. *ʔana ɛawza ʔaqṭaɛ il-xalaf* I want to stop having children. *qaṭaɛit il-ʔamal fi-rguuɛ-u* she's given up hope of his return. ‖*qaṭaɛ in-nafas* and *qaṭaɛ il-qalb* to leave one panting, leave one short of breath, as in *ʔik-kuḥḥa qaṭaɛit nafas-i* the cough left me panting. - *qaṭaɛ kalam-na* he interrupted our talk. - *qaṭaɛt[i] rigl-u mil-beet* I stopped him coming to the house. - *qaṭaɛ ik-koora* he intercepted the ball (cf sense 1). - *xawwif-ni xallaa-ni qaṭaɛt il-xalaf* ≈ he gave me a ball-shrivelling scare. **4a** to issue, sell (usually tickets or cloth). *ʔik-kumsari qaṭaɛ-li taẓkarteen* the conductor issued two tickets for me. **4b** to buy (usually tickets or cloth). *miʃ ḥa-tiqdar tiqṭaɛ tazaakir* you won't be able to get any tickets. **4c** to buy the cloth for (a garment). *qaṭaɛt[i] gallabiyya* I bought a length of cloth for a galabiya. **5** to cover (distance, ground). *qaṭaɛna xamsiin kiilu f-yoom waaḥid* we covered fifty kilometres in one day. **6** to cost, amount to. *qaḍeet il-maʃawiir bi-taks[i] w-qaṭaɛ kitiir* I did the errands by taxi and it came to quite a bit. *ʔil-ɛamiiṣ qaṭaɛ gineeh* the shirt cost a pound. — /vi/ **7** to break, snap. *ʔis-silk[i] qaṭaɛ* the wire snapped. **8** to break off, terminate. *ʔil-ʔirsaal qaṭaɛ* the transmission ceased. *ʔin-nuur bi-yiqṭaɛ kull[i] ʃwayya* the electricity keeps going off. **9** to curdle (of milk). - vn *qaṭɛ,*

qaṭaɛaan, qaṭɛiyya; ava *qaaṭiɛ*; pva *maqṭuuɛ*.
¶ *qaṭaɛ nafs-u li-* to devote oneself to (s.th.). *- yiqṭaɛ ...* (God) damn ...! *yiqṭaɛ-u w-yiqṭaɛ illi gabuu* damn him and his forebears! *- quṭuɛ ...* /fem *quṭɛit*, pl *quṭɛu*/ damn ...! ... be damned! *quṭɛit il-ʃutubisaat* the buses be damned! *quṭɛit il-xilfa w-sirit-ha* to hell with this business of having children!

قطعة *qaṭɛa* /pl *-aat*/ instance noun of *qaṭɛ*. *qaṭɛit qalb* heart-break. ‖*qaṭɛa bala waṣla* (an unjoinable cut) ≈ good riddance.

قطعا *qaṭɛan*↑ **1** /adv/ decidedly, definitely. *rafaḍit qaṭɛan* she has definitely refused. **2** /interj/ certainly! of course!

قطعيّة *qaṭɛiyya* /n/ **1** cutting, method of cutting (usually of meat). *ʃig-gazzaar da qaṭɛiyyit-u miʃ ɛagbaa-ni* I don't like the way that butcher cuts. ‖*sikkiinit qaṭɛiyya [plumb]* wheel cutter. *- sanduuq qaṭɛiyya [carp]* mitre box, block. **2** /pl *-aat*/ *[butcher]* cut (of meat).

مقطوع *maqṭuuɛ* /n pl *maqaṭiiɛ*/ loafer, idler, wastrel. *ʃibɛid ɛanhum - dool ʃiwayyit maqaṭiiɛ* keep away from them - they're just a lot of good-for-nothings!

مقطوعة *maqṭuuɛa*↑ /n pl *-aat*/ (musical, literary etc.) composition.

مقطوعيّة *maqṭuɛiyya* /n/ piece-work (as opposed to salaried work).

قطعة *qiṭɛa, quṭɛa, qiṭɛa* /n pl *qiṭaɛ, quṭaɛ, qiṭaɛ*/ **1** part, piece. *qiṭaɛ ɣiyaar* spare parts. *quṭɛit qumaaʃ* a piece of cloth. *b-aʃtaɣal bil-qiṭɛa* I work on a piece-work basis. **2** (plant) cutting.

قطاع *qiṭaaɛ*↑ /n pl *-aat*/ sector, section. *qiṭaaɛ ɛaamm wi-qiṭaaɛ xaaṣṣ* public sector and private sector.

قطوع *qaṭuuɛ* /n pl *qawaṭiiɛ*/ **1** partition. *ʃuɣl il-banna b-yibtidi fil-ḥeṭaan wil-qawaṭiiɛ* the work of the bricklayer begins with the walls and partitions. **2** *[nav]* bulkhead.

قطيعة *qaṭiiɛa [women in trad soc]* exclamation of exasperation ≈ (oh) drat! (oh) blast! as in *qaṭiiɛa - nisiit ʃagiib filuus* oh blast! I forgot to bring any money! *qaṭiiɛa - ʃil-bint di tʃaxxarit leeh* drat! why is this girl late?

قطّاع *qaṭṭaaɛ* /n */: *qaṭṭaaɛ ṭuruq* bandit, robber.

قطّاعى *qaṭṭaaɛi* **1** /n/ retailing. *tigaarit il-qaṭṭaaɛi* the retail trade. *bi-ybiiɛ il-biḍaaɛa bil-qaṭṭaaɛi* he sells the goods retail. **2** /adv/ off and on, in interrupted bits (as opposed to continuously, at one go). *b-aakul qaṭṭaaɛi* I grab a bite here and there, I eat my meals in bits and pieces. *bi-yiʃtaɣal qaṭṭaaɛi* he does his work by fits and starts, he works now and then.

مقطع *maqṭaɛ*[1] /n pl *maqaaṭiɛ*/ **1** section, passage (of music, poetry etc.). **2** measure of cloth required (to make a particular article). *maqṭaɛ gallabiyya* material enough for a galabiya. **3** cutting instrument. *maqṭaɛ waraq* letter-opener, paper-knife.

مقطع *maqṭaɛ, maqṭaɛ*[2] /n pl *maqaaṭiɛ, maqaaṭiɛ*/ syllable.

انقطع *ʃitqaṭaɛ* /vi/ **1** to be cut (up), be torn (up) or become cut, become torn. **2a** to be severed and removed. **2b** *[Chr]* to be excommunicated. **3** to be suspended, be terminated. *ʃil-ɛaada tqaṭaɛit ɛandaha* she stopped having her period. *ʃil-ɛilaqaat id-diblumasiyya tqaṭaɛit* diplomatic relations were cut. **4a** to be issued, be sold (usually of tickets or cloth). **4b** to be bought (usually of tickets or cloth). **5** to be covered (of distance, ground). *ʃil-masaafa tqaṭaɛit fi-yomeen* the distance was covered in two days. - iva *mitqiṭiɛ*.

انقطع *ʃinqaṭaɛ* = *ʃitqaṭaɛ*. - iva *minqiṭiɛ*.

قطّع *qaṭṭaɛ* /vt/ **1** to cut up, tear up (extensively or successively). *qaṭṭaɛu il-film* they cut a lot of the film. *baqit tusrux wi-tqaṭṭaɛ ʃaɛr-a-ha* she started screaming and tearing her hair. ‖*qaṭṭaɛu farwit-u* they gossiped maliciously about him behind his back. *- qaṭṭaɛt*[i] *qalb-i* ≈ I'm all cut up about you! *- miqaṭṭaɛ is-samaka w-del-ha* he is committing every vice. **2a** to issue, sell (usually many tickets or many pieces of cloth). **2b** to buy (usually many tickets or many pieces of cloth). — /vi/ **3** to keep breaking down. *ʃin-nuur bi-yqaṭṭaɛ* the electricity keeps going off. - vn *taqṭiiɛ*; ava/pva *miqaṭṭaɛ*.

تقاطيع *taqaṭiiɛ (il-wiff)* /pl n/ (facial) features.

اتقطّع *ʃitqaṭṭaɛ* /vi/ to be or become cut up, be torn up (extensively or successively). - ava/iva *mitqaṭṭaɛ*.

قاطع *qaaṭiɛ* /vt/ **1** to interrupt. *qaṭiɛt-i-ni ɛaʃaan kida* you interrupted me for that? **2** to boycott. *qaṭɛu l-maḥallaat* they boycotted the stores. — /vi/ **3** to make a guess concerning things supposed to be known only to God (e.g., life span, future gains etc., such an act being tantamount to blasphemy). *dayman yiqaaṭiɛ ɛala rizq-u* he is always counting God's future bounty (as if he had Him in his pocket). - also *qooṭaɛ*. - vn *muqaṭɛa*; ava *miqaaṭiɛ*.

الإقطاع *ʃil-ʃiqṭaaɛ* /n/ feudalism.

إقطاعى *ʃiqṭaaɛi* /adj */ **1** feudal, feudalistic. **2** oppressive, exploitative (of a person).

إقطاعيّة *ʃiqṭaɛiyya* /n pl *-aat*/ feudal estate.

استقطع *ʃistaqṭaɛ* /vt/ **1**↑ to deduct. *bi-yistaqṭaɛ minnu l-ʃugra* he deducts the rent from it. **2** to exploit (people). *ʃit-turgumaan da fannaan fi-stiqṭaaɛ is-suwwaaḥ* that dragoman is expert in the exploitation of tourists.

-vn ʃistiqtaaɛ; ava/pva mistaqtaɛ.
استقطاع ʃistiqtaaɛˆ /n pl -aat/ deduction. ʃistiqtaaɛ id-dariiba the tax deduction.

¹ ق ط ف
قطف qaṭaf (u) /vt/ to pick, pluck. qaṭafit-li ward she picked me some flowers. -vn qaṭf; ava qaaṭif; pva maqṭuuf.
قطفة qaṭfa /inst n, pl -aat/ a picking, a plucking. ‖ʃaay ʃawwil qaṭfa freshly made tea (as opposed to tea made from adding water to used leaves).
مقطوف maqṭuuf /adj/ pallid (usually of the face). wiff-u (or loon-u) maqṭuuf he looks pale. -also maxṭuuf.
قطف quṭf /n pl qiṭaaf, ʃiqṭaaf/ bunch (of grapes).
مقطف maqṭaf /n pl maqaaṭif/ flexible two-handled basket made of palm fronds (see Pl.B, 7).
انقطف ʃitqaṭaf /vi/ to be picked, be plucked. bi-yitqiṭif ʃaxḍar qabl[i] ma yinʃaf it is picked green, before it dries. -iva mitqiṭif.
قطّف qaṭṭaf /vt/ to pick or pluck (successively). -also qarṭaf. -vn taqṭiif; ava/pva miqaṭṭaf.
انقطّف ʃitqaṭṭaf /vi/ to be picked, be plucked (successively). -iva mitqaṭṭaf.

² (ق ط ف)
قطيفة qaṭiifa /n/ 1a velvet. 1b (also qaṭiifa quṭn) corduroy. 2 Indian or African marigold(s) (Tagetes erecta).
قطايف qaṭaayif /pl n/ small pancakes stuffed with nuts or other sweet filling fried and moistened with syrup or honey.

ق ط ق ط
قطقوط qaṭquuṭ /n pl qaṭaqiiṭ/ cutie, doll.
مقطقط miqaṭqaṭ /adj */ dainty, petite.

ق ط م
قطم qaṭam (u) 1 /vt/ to break (off). qaṭam-li ḥittit qaṣab he broke me off a piece of sugar cane. qaṭam il-musmaar bik-kammaaʃa he snapped off the nail with the pincers. yuqṭum raqabt-ak may He break your neck! ‖saaɛit ma ʃafuu-ni qaṭamu k-kalaam the moment they saw me they broke off their conversation. -qaṭam saakit to fall silent. -ga-k qaṭm[i] wiṣṭ-ak may you be halved! 2 /vi/ to break (off). ʃiṣ-ṣulb[i] naaʃif wi-lamma niigi niftaval fii b-yuqṭum the steel is brittle and when we come to work on it, it breaks. sinn il-qalam qaṭam the nib of the pen has snapped off. -vn qaṭm, qaṭamaan; ava qaaṭim; pva maqṭuum.
قطمة qaṭma /n pl -aat/ 1 instance noun of qaṭm. 2 bite, mouthful. xud-lak qaṭma min if-fukulaata di have a bite of this chocolate!
انقطم ʃitqaṭam /vi/ to be broken (off). -iva mitqiṭim.
انقطم ʃinqaṭam = ʃitqaṭam. -iva minqiṭim.
قطّم qaṭṭam /vt/ 1a to break up, break off (extensively or successively). ʃibn-i bi-yḥibb[i] yqaṭṭam ʃiqlaam-u ɛafaan yibrii-ha taani my son likes to break his pencils so he can sharpen them again! 2 to discourage with ridicule. ɛumr-ak ma-bi-tʃaggaɛ-ni - dayman bi-tqaṭṭam-ni you never give me any encouragement, you're always running me down! — /vi/ 3 to break up, break off (extensively or successively). -vn taqṭiim; ava/pva miqaṭṭam.
المقطّم ʃil-muqaṭṭam /prop n/ 1 chain of hills running north and south to the east of Cairo. 2 district in the easternmost part of Cairo, situated on the Muqattam hills.
انقطّم ʃitqaṭṭam /vi/ passive of qaṭṭam. -iva mitqaṭṭam.

ق ط ن
قطن quṭn 1 /coll n, pl ʃaqṭaan/ cotton. ‖quṭn[i] ṭibbi cotton wool, absorbent cotton. 2 /n pl qaṭaani/ field of cotton plants.
قطنة quṭna /n pl -aat/ piece of cotton. ‖ḥa-taaxud minha ʃeeh veer il-quṭna what can you take from this world but the piece of cotton (placed in the anus by the corpse-washer)?
قطني quṭniˆ /adj */ made of cotton.
قطنيّة quṭniyya /n/ 1 cotton-based fabric with a silky finish and woven stripe. 2 /pl -aat/ garment made of this fabric.

ق ط و
قطّاوى qaṭṭaawi /n/ large variety of pigeon raised for food and breeding, characterized by a large crested head and light-brown plumage.

¹ ق ع د
قعد qaɛad (u) /vi/ 1a to sit, sit down. qaɛad mirabbaɛ ɛak-kursi he sat cross-legged on the chair. tiɛibt[i] min il-quɛaad I got tired of sitting. qaɛadit gambi she sat down next to me. ‖ʃil-quɛaad maɛaa ḥilw he's good company. -quɛaad il-xazaana wala gawaazit in-nadaama [prov] ≈ better miserably single than regretfully married. - da kaan qaaɛid ɛala qalb-i ≈ his presence was oppressive, I didn't like him. -qaaɛid ɛala ʃaɛṣaab-u he is tense. -qaɛad ɛala ʃiid(-u) to keep an eye on (s.o. working), supervise closely, as in ʃuqɛud ɛala ʃiid-u l-xaayit ma yxallaṣ stand over him until he finishes! 1b [naut] to run aground. 2 to stay, remain.

saɛaat bi-yuqɛudu fil-baḥr^{i} *ʃasabiiɛ* sometimes they stay at sea for weeks! *miʃ ḥa-yuqɛud laha ṭuul ɛumr-a-ha* he won't wait around for her all her life. *qaɛadt*^{i} *zaɛlaan ṭuul il-leel* I stayed upset all night long. ‖ *ʃuqɛudi bil-ɛafya*$^{↓}$ ≈ keep well! (said to or by a woman on parting). **3** /preverb/ to continue to. *ʃis-suxuniyya qaɛadit tiruuḥ wi-tiigi* the fever kept coming and going. *ʃin-naas qaɛadu ynaadu ɛat-taksi* the people kept calling for the taxi. *qaɛad yiftikii-li* he kept complaining to me. - vn *quɛaad, qaɛadaan, quɛuud*; ava *qaaɛid*.

قعدة *qaɛda*^{1} /n pl *-aat*/ **1a** a sitting down. **1b** sitting position. *di qaɛda ma-titqiɛid-ʃ*^{i} *wil-mudiir mawguud* you shouldn't sit in that position when the boss is around! **2a** what is sat upon, seat. *qaɛdit ik-kursi* seat of the chair. *qaɛdit ik-kabineeh* lavatory seat. *haat karaasi w-qaɛdaat* bring chairs and whatnot to sit on! **2b** pair of buttocks, posterior. **3** informal gathering, gettogether. ‖ *ʃil-ʃafyuun ma-luu-ʃ qaɛda* taking opium is a solitary business.

قعدة *qiɛda, qaɛda: zu l-qiɛda* the eleventh month of the Muslim year.

قاعدة *qaɛda*^{2} /n/ **1** /pl *-aat*/ base, stand, pedestal. *qaɛdit il-marwaḥa* base of the fan. *qaɛdit is-sindaal* body of the anvil. *qaɛdit ʃ-ʃiiʃa* stand and water-vessel of the water-pipe. **2** /pl *qawaaɛid, qawaaɛid*/ **2a** base, seat (of operations). *qawaaɛid ḥarbiyya* military bases. **2b** basis, foundation. *qaɛda xarasaniyya* cement foundation. **2c** rule, principle. *qawaaɛid in-naḥw* rules of grammar.

قعود *qaɛuud* /n pl *qiɛdaan*/ young male camel.

مقعد *maqɛad* /n pl *maqaaɛid*/ **1** *[rur]* second-floor room. **2** posterior, buttocks.

مقعدة *maqɛada, muqɛada* /n/ posterior, buttocks.

اتقعد *ʃitqaɛad* /vi/ (impersonal) passive of *qaɛad*. *di l-bint illi yitqiɛid maɛaaha* this is the girl to be seated with! *ḥaṣiira yitqiɛid ɛaleeha* a mat to be sat on. *makaan yitqiɛid fii* a place to be sat in. - iva *mitqiɛid*.

انقعد *ʃinqaɛad* = *ʃitqaɛad*. - iva *minqiɛid*.

قعّد *qaɛɛad* /vt/ **1** to cause to sit, seat. *qaɛɛad iz-zibuun quddaamu* he sat the customer down before him. **2** to cause to stay. *qaɛɛaduu-na f-lukanda* they put us up in a hotel. *miqaɛɛad-ha ɛal-baab* he is stationing her at the door. - vn *taqɛiid*; ava/pva *miqaɛɛad*.

اتقعّد *ʃitqaɛɛad* /vi/ passive of *qaɛɛad*. - iva *mitqaɛɛad*.

ق ع د^{2}

قعد *qiɛd* /n/ *[cook]* amount of liquid (usually salt water) appropriate to a particular dish. *ʃil-qiɛd*^{i} *btaaɛ il-firaax kubbayteen mayya l-kull*^{i} *farxa* the amount of liquid to be added in the cooking of chickens is two cups of water per chicken. - also *ɛiqd*.

قعديّة *qiɛdiyya* /n pl *-aat, qiɛdaan*/ small earthenware kneading-crock.

ق ع د^{3}

استقعد *ʃistaqɛad*$^{↓}$ /vi/ to believe (in the effectiveness of s.th., e.g. magic). - also *ʃistaɛqad*. - vn *ʃistiqɛaad*; ava *mistaqɛad*.

ق ع ر

قعر *qaɛar (a, i)* /vt/ **1** to pierce the bottom or base of. *ḥaasib qaɛart iṭ-ṭabla* careful, you've punctured the drum! *kursi maqɛuur* a chair without a seat. **2** *[coarse]* to deflower. - vn *qaɛr, qaɛaraan*; ava *qaaɛir, qaaɛir*; pva *maqɛuur*.

قعر *qaɛr* /n pl *quɛuur, quɛúra*/ **1** bottom, bottom part. *qaɛr il-xaṭṭ* bottom of the furrow. *ʃis-sukkar fi-qaɛr il-fingaal* the sugar is in the bottom of the cup. *ʃil-vaaza laha qaɛr*^{i} *mdawwar* the vase has a circular base. **2** *[coarse]* cunt.

اتقعر *ʃitqaɛar* /vi/ passive of *qaɛar*. - iva *mitqiɛir*.

قعّر *qaɛɛar* /vt/ **1** to hollow out, make concave. **2** *[pottery]* to attach the bottom part to (a pot). — **3** to fall to a low level. *ʃil-mayya qaɛɛarit fiz-ziir* the water went low in the water-jar. - vn *taqɛiir*; ava/pva *miqaɛɛar*.

اتقعّر *ʃitqaɛɛar* /vi/ passive of *qaɛɛar* 1 and 2. - iva *mitqaɛɛar*.

ق ف ا see ق ف و : *qafa*

ق ف ز

قفز *qafaz (i)* **1** to leap across, jump over. *qafazt it-tirɛa* I leapt across the canal. **2** /vi/ to jump, leap. *ʃil-ḥuṣaan mitmarran ɛal-qafz* the horse is well-trained in jumping. - vn *qafz, qafazaan*; ava *qaafiz*; pva *maqfuuz*.

قفزة *qafza* /inst n, pl *-aat*/ a jump, leap, a vault.

قفيز *qafiiz* /n pl *qafaayiz, qifzaan, ʃiqfiza, qifiza*/ bonding clip.

اتقفز *ʃitqafaz* /vi/ to be jumped over (of a distance, a fence etc.). - iva *mitqifiz*.

قفّز *qaffaz* /vt/ to cause to jump. - vn *taqfiiz*; ava/pva *miqaffiz*.

ق ف ش

قفش *qafaʃ (i)* /vt/ **1** to grip, seize. *qafaʃt*^{i} *ʃiid-u* I caught his hand. *fagʃa qafaʃ (fi-)zoor-i* he suddenly gripped my throat. ‖ *xad ... qaff* to seize ... with a

sudden movement. *ʔil-mudiir daxal wi-xadt-u qaff* the director entered and I grabbed him straight away. - *xad iṣ-ṣanʕa qaff* he learnt the trade in a random fashion. **2** to catch out, catch in the act. *qafaʃuu b-yisraq* they nabbed him (in the act of) stealing. *muwaẓẓaf kaan laaṭiʃ ʕuhdit-u w-ʔana lli qafaʃt-u* an employee was filching what was entrusted to him and I'm the one who caught him at it. — /vi/ **3** to jam, seize up. *ʔil-faraamil bi-yiqfiʃu ʕaṭ-ṭaara* the brakes jam on the rim. *ʔit-tiruus bi-tiqfiʃ* the gears seize up. **4** to wisecrack. - vn *qaff, qafaʃaan*; ava *qaafiʃ*; pva *maqfuuʃ*.

قفشة *qaffa* /n pl *-aat*/ instance noun of *qaff*.

اتقفش *ʔitqafaʃ* /vi/ passive of *qafaʃ*. - iva *mitqifiʃ*.

انقفش *ʔinqafaʃ* = *ʔitqafaʃ*. - iva *minqifiʃ*.

قفّش *qaffiʃ* /vt/ **1** to nab, catch (a number of people). **2** to fondle, squeeze (a woman's sensitive parts). *qaffiʃ (fi-)bzaz-ha* he fondled her breasts. — /vi/ **3** to jam, seize up. - vn *taqfiiʃ*; ava/iva *miqaffiʃ*.

اتقفّش *ʔitqaffiʃ* /vi/ **1** passive of *qaffiʃ* 1 and 2. **2** = *qaffiʃ* 3. - iva *mitqaffiʃ*.

ق ف ص

قفص *qafaṣ* /n pl *ʔaqfaaṣ, qifaaṣ, qifiṣa*/ **1** cage or crate of palm stalks, used to transport fruit, produce, poultry. ‖ *baḍit-lu fil-qafaṣ* ≈ good fortune just fell into his lap. **2** *[anat]* rib cage. ‖ *(huwwa) nafas fi-qafaṣ* (he is) barely alive. **3** prisoner's dock.

قفّاص *qaffaaṣ* /n */ maker of palm-stalk crates.

قفّص *qaffaṣ* /vt/ to crate (in palm-stalk crates). *qaffaṣu t-tiin* they crated the figs. - vn *taqfiiṣ*; ava/pva *miqaffaṣ*.

تقفيصة *taqfiiṣa* /n pl *-aat*/ **1a** large crate made of palm stalks. **1b** fence or enclosure made of palm stalks. *taqfiiṣit firaax* chicken coop. **2** *[constr]* grid of reinforcement bars of the foundation base of a post or pillar.

اتقفّص *ʔitqaffaṣ* /vi/ to be crated (in palm-stalk crates). - iva *mitqaffaṣ*.

ق ف ط ا ن

قفطان *quftaan* <T *kaftan*> /n pl *qafaṭiin*/ kaftan, long loose robe (usually made of striped cotton-silk material) worn under outer garments by men in traditional Egyptian society (see Pl.F, 16).

ق ف ع

قفّع *qaffaʕ* **1** /vt/ to cause to shrivel up, emaciate. **2** /vi/ to be or become shrivelled up or emaciated. - vn *taqfiiʕ*; ava *miqaffaʕ*.

تقفيعة *taqfiiʕa* /pl *-aat*/ instance noun of *taqfiiʕ*.

اتقفّع *ʔitqaffaʕ* /vi/ to become or be made shrivelled or emaciated. - ava/iva *mitqaffaʕ*.

ق ف ف

قفّة *quffa* /n pl *qufaf*/ large flexible two-handled basket of palm stalks similar to a *maqṭaf* (see Pl.B, 7), but larger. *ʔil-quffa lli laha widneen yifiluu-ha tneen [prov]* ≈ many hands make light work. ‖ *waaqiʕ min qaʕr il-quffa* overlooked as trivial, unjustifiably disregarded, as in *ma-daʕu-nii-ʃ ʕal-faraḥ - tiqul-ʃ waaqiʕ min qaʕr il-quffa* they didn't invite me to the wedding, as if I were a nobody.

ق ف ق ف

قفقف *qafqaf* /vi/ to shiver with cold, - vn *qafqafa*; ava *miqfqaf*.

ق ف ل ١

قفل *qafal (i)* /vt/ **1** to close, shut. *ʔiqfil il-baab* close the door! *qafalt-u bil-muftaaḥ* did you lock it? ‖ *ʔiqfil is-sikka* hang up the phone! - *qafalt*^{i} *ḥsaab-i fil-bank* I closed my account at the bank. - *xaana maqfuula* point occupied by a specific number of counters of one player (in backgammon). - *zawya maqfuula [math]* acute angle. - *baṭṭiixa maqfuula* a matter of luck; as in *ʔig-gawaaz baṭṭiixa maqfuula* marriage is (like) a closed water-melon (you can't tell how it's going to turn out). - *nifs-u maqfuula minni muf ʕaarif leeh* he's indifferent to me - I don't know why! **2** to turn off, switch off. *ʔiqfil ir-radyu* turn off the radio! *ma-qafalt*^{i}*-ʃ il-ḥanafiyya* you didn't turn off the tap! — /vi/ **3** to close. *ʔiʃ-ʃirka b-tiqfil yoom ig-gumʕa* the firm closes on Fridays. *ʔig-gamʕa qafalit* the university closed down. - vn *qafl, qafalaan*; ava *qaafil*; pva *maqfuul*.

قفلة *qafla* /n pl *-aat*/ **1** instance noun of *qafl*. **2** closing passage, final section. *qaflit il-ɣinneewa kaanit zift* the end of the song was terrible.

قفل *qifl* /pl *ʔaqfaal*/ **1** /n/ lock, padlock. **2** /adj invar/ **2a** inflexible. *raagil qifl* a dogmatic man. **2b** *[abus]* inexperienced, naive. *walad qifl* a green kid.

اتقفل *ʔitqafal* /vi/ **1** to be closed, be shut. *ʔis-sifaara tqafalit* the embassy was closed down. **2** to be switched off, be turned off. - iva *mitqifil*.

انقفل *ʔinqafal* = *ʔitqafal*. - iva *minqifil*.

قفّل *qaffil* /vt/ **1a** to close up, close off. *ʔil-wiʃʃeen illi bi-yqaffilu l-mutoor* the two sides that close off the motor. *qaffil il-beet* close up the house! ‖ *qaffilt il-ʔarḍ* you blocked the play (in cards). - *ʔil-buliis miqaffil-ha ʕaleena* the police are clamping down on us.

- *ʔil-balṭagiyya qaffilu l-qahwa* the thugs made a shambles of the coffee-house (i.e. caused it to be closed down). **1b** to close (a number of things). *qaffil kull if-ʃababiik* close all the windows! **2a** to finish up, finish off (a job). *qaffilt il-beeʕa* I wrapped up the sale. **2b** to assemble, put together. *qaffil il-ḫalq* he assembled the door-frame. *taqfiil nihaaʔi* a final assembly. — /vi/ **3** to close (of a number of things). *ʔinzil il-balad yoom il-ḫadd[i] tlaaqi muʕẓam il-maḫallaat miqaffila* if you go downtown on Sunday you'll find most of the stores closed. ‖*muxx-i qaffil* my mind has jammed, my mind has stopped working. - *ma-tkallim-uu-ʃ wi-huwwa mqaffil* don't talk to him when he's in a bad mood (unreceptive, closed)! - vn *taqfiil*; ava/pva *miqaffil*.

مقفّل *miqaffil* /adj */ **1** inflexible, dogmatic. **2** inexperienced, naive.

اتقفّل *ʔitqaffil* /vi/ **1** to be closed up, be closed off. *ʔiʃ-ʃunaṭ kull-a-ha tqaffilit bil-muftaaḫ* the suitcases have all been locked. **2a** to be finished up, be finished off. *ʔiʃ-ʃuvl itqaffil* the work was all wrapped up. **2b** to be assembled, be put together. *ḫa-yitqaffil fi-makaan-u* it will be assembled in situ. - **iva** ***mitqaffil***.

ق ف ل [2]

قافلة *qafla, qaafila*↑ /n pl *qawaafil, qawaafil*/ caravan. *qaafilit ṣeed* hunting expedition.

ق ف و

قفا *qafa* /n pl *qafawaat, ʔiqfiya*/ **1** nape. *xadt-u qafa* I gave him a blow on the back of the neck. ‖*xalla wiʃʃ-i zayy[i] qafaa-ya* he humiliated me with his bawling. - *ʕala qafa min yifiil* plentiful, abundant, as in *ʔis-samak hina ʕala qafa min yifiil* here fish is plentiful. - *ʕala qafa* ... at the expense of ..., as in *huwwa ʕaayiʃ ʕala qafaa-ya* he's living at my expense. - *lamma yfuuf qafaa min ʏeer miraaya [prov]* when he sees the back of his neck without a mirror (i.e. never)! - *ʔilli tikrah (tifuuf) wiʃʃ-u yiḫwig-ak iz-zaman li-qafaa [prov]* Time may put you in need even of the nape of the neck of one whose face you do not (at present) like to see. **2** /pl *qafawaat* only/ an oafish person.

قافية *qafya* /n pl *-aat, qawaafi*/ witty repartee centring on a single subject, each remark punning a particular aspect of the subject, in a form similar to 'knock-knock' jokes. *daxalna l-baʕd[i] qafya* we engaged in witty repartee. ‖*bala qafya*↓ seriously, no joke intended, all kidding aside.

اتقفّى *ʔitqaffa* /vt/ **1** to watch (s.o.) closely, subject to close scrutiny. **2** to pester, harass, pick on: *ʔibʕid ʕanni ʔinta mitqaffii-nii leeh* keep away, why are you needling me? - ava *mitqaffi*.

استقفى *ʔistaqfa* = *ʔitqaffa*. - ava *mistaqfi*.

استقفّى *ʔistiqaffa*↓ = *ʔitqaffa*. - ava *mistiqaffi*.

ق ف ى see **ق ف و**: *qafya*

ق ل ب [1]

قلب *qalab (i)* /vt/ **1a** to invert, turn over. *ʔiqlib il-martaba* turn over the mattress. *qalab ig-gallabiyya w-hazz-a-ha* he turned his galabiya inside out and gave it a shake. ‖*ʔakalt[a] ḫaaga qalabit miʕdit-i* I ate something which upset my stomach. - *qalab dimaaʏ-i b-kalaam-u* he set my head spinning with his talk. - *qalab siḫnit-u* he scowled. - *qalabit-u ʕalayya* she turned him against me. - *qalabt il-beet ʕak-kitaab da* I turned the house upside down looking for that book, I looked everywhere for it. - *ma-tiʕmil-ʃ[i] kida laḫsan babaa-k yiqlib id-dinya* don't do that or your daddy will make one hell of a row! **1b** to knock over. *qalab if-ʃaay* he knocked over the tea. **2** to convert into, turn into. *qalab il-ʔooḍa maktab* he turned the room into an office. *qalabit-u qird* she turned him into a monkey. *ma-tiqlib-haa-ʃ ʏamm* don't make things gloomy! ‖*qalbin-ha buuẓa* (1) they are having a riotous time. (2) they've made the whole thing chaotic. — /vi/ **3** to become inverted, turn over. *ʔil-markib qalabit* the boat capsized. *bir-raaḫa laḫsan il-ḫumuula tiqlib ʕalayya* take it easy or the load will tip onto me! **4** to undergo a change, become converted. *ḫaẓẓ-i qalab* my luck changed. *ʔil-ḫafla qalabit (bi-)ʏamm* the mood of the party became funereal. - vn *qalb, qalabaan*; ava *qaalib*; pva *maqluub*.

قلبة *qalba* /inst n, pl *-aat*/ an inversion, a turning upside-down, a conversion. ‖*qalbit dimaaʏ* fuss and bother.

مقلوب *maqluub* /adj/ inverted, reversed. ‖*bil-maqluub* (1) upside-down. (2) inside-out. (3) back-to-front. (4) backward, in reverse order. - *buus ʔiid-ak bil-maqluub* kiss your hand back and front (as a sign of gratitude to God).

قلبة *qalaba* /n/ noise, fuss. *baṭṭal qalaba* be quiet!

قلّاب *qallaab* /n pl *-aat*/ **1** cement mixer. **2** tipper truck. **3** flap (e.g., on a pocket or cuff). **4** *qallaab in-nuur [auto]* dipper.

مقلب *maqlab* /n pl *maqaalib*/ **1** (dirty) trick, prank. *ḍarab-na maqlab* he played a dirty trick on us. **2** refuse dump.

اتقلب *ʔitqalab* /vi/ **1a** to be inverted, invert. *kull il-fanagiin bi-titqilib ʕala wiʃʃ-a-ha baʕd[i] ma titʏisil* all

the cups are turned upside down after being washed. *ʃil-ʕarabiyya tqalabit ʕala ḍahr-a-ha* the car was turned right over! **1b** to be knocked over. **2** to be converted. *ʃil-ʕimaara tqalabit lukanda* the building has been converted into a hotel. - ava/iva *mitqilib*.

انقلب *ʃinqalab* = *ʃitqalab*. - vn *ʃinqilaab*; ava/iva *minqilib*.

انقلاب *ʃinqilaab, ʃinqilaab* /n pl *-aat*/ coup. *ʃinqilaab ʕaskari* military coup.

قلّب *qallib* /vt/ **1a** to invert (one thing successively or a number of things). *bi-yqallib-u bil-midra* he turns it over and over with a winnowing fork. ‖ *qallib fi-gyuub-u* he rummaged around in his pockets. **1b** to stir. *qallib il-buuya* he stirred the paint. *qallib-hum fi-baʕḍ* stir them together! ‖ *beeḍ miqallib* scrambled eggs. - *bi-yqallib ʕalayya l-mawaagiʕ* he stirs up old wounds of mine. **2** to examine thoroughly, check carefully. *qallib (f)il-ʕarabiyya* he gave the car a careful check-over. *qallib (f)il-ḥumaar qabl[i] ma tiftirii* look the donkey over carefully before you buy it. ‖ *qaʕad yiqallib fik-kitaab* he leafed through the book. - *wiff iṣ-ṣuramaati yqallib-u w-yirmii* (a face which even a cobbler would only examine and discard) ≈ an ugly mug. - vn *taqliib*; ava/pva *miqallib*.

اتقلّب *ʃitqallib* /vi/ **1a** to be inverted (of one thing successively or of a number of things). *ʃil-kubbayaat kull-a-ha titqallib baʕd[i] ma titɣsil* the glasses are all upturned after they are washed. **1b** to turn oneself over and over. *qaʕad yitqallib fis-siriir* he kept tossing and turning in bed. **2** to be stirred. - ava/iva *mitqallib*.

ق ل ب [2]

قلب *qalb* /n pl *quluub*/ **1** heart. ‖ *ʕandu l-qalb* he has heart trouble. - *ḥaṭṭa ʃid-ha ʕala qalb-a-ha* she's apprehensive. - *qalb-u wiqiʕ fi-riglee* ≈ his heart was in his mouth. - *yigii-lak qalb* have courage! - *qalb-i maʕaak* and *qalb-i ʕandak* I sympathize with you, my heart is with you. - *ʃil-quluub ʕand[i] baʕḍ-a-ha* ≈ a person can always tell when another likes him. - *qalb-i ʕaleek* (1) I have your interest at heart. (2) I worry about you. - *qalb-i ʕala ʃibn-i nfaṭar wi-qalb ibn-i ʕalayya zayy il-ḥagar [prov]* (I was heart-broken over my son, but my son's heart was as hard as stone towards me) children are a certain care but an uncertain comfort. - *ya qalb umm-u* poor darling, as in *kaanit ya qalb umm-a-ha ʕayyaana* she was sick, poor darling! **2** centre, core, inside. *qalb is-silk* core of the wire. *qalb iṣ-ṣams* the sun's core. *qalb il-makana* the inside of the machine. *qalb[i] xaṣṣ* lettuce heart. *huwwa waaqif fi-qalb il-malʕab* he's standing in the centre of the pitch. ‖ *qalb[i] ṭambuur* axle-rod of an Archimedes' screw. - *qalb[i] gooza* cylindrical stem which leads out of the water-vessel of a *gooza* and supports the tobacco (see Pl.I, 9). – *fi-qalb-* /prep, w foll pron suff *qalbii-*/ **3** in, inside. *fi-qalb is-siriir* in the bed. *fi-qalb il-mayya* in the water. *fi-qalb id-dulaab* inside the wardrobe.

قلبيّة *qalbiyya* /n pl *-aat*/ centre, core, inside. *qalbiyyit il-furn[i] suxna* the inside of the oven is hot. ‖ *fi-qalbiyyit* within, inside, as in *laqeet il-quṭṭa f-qalbiyyit if-fanṭa* I found the kitten inside the suitcase.

قالب *qaalib* /n pl *qawaalib*/ **1** block, cube. *qaalib sukkar* sugar cube. *qaalib ṭuub* brick. **2** mould, matrix. *qaalib ig-gazma* shoe-last.

ق ل ح [1]

ق ل ح [1] see ق ل و ح: *qaluuḥ, qaluuḥa*

ق ل ح [2]

ق ل ح [2] see ق و ل ح: *qolḥa*

ق ل د

قلّد *qallid* /vt/ to imitate. *ʃiḥna bi-nqallid ʃurubba f-ʕuyub-ha* we are imitating Europe in her faults. *qallid ṣoot il-baṭṭa* he imitated the sound of a duck. - vn *taqliid*; ava *miqallid*.

تقليد *taqliid* /n pl *taqaliid, taqaliid*/ tradition, custom.

تقليد *taqliid* /adj invar/ imitation. *feen il-fuṣuṣ it-taqliid illi ʕandak* where are the imitation stones you have? ‖ *naas taqliid* unreliable people.

تقليدي *taqliidi, taqliidi* /adj/ traditional.

اتقلّد *ʃitqallid* /vi/ to be imitated. - iva *mitqallid*.

ق ل س

قلسة *qilsa* /n pl *qilas*/ *[rur]* hobble of a type resembling rope handcuffs.

ق ل ش

قلش *qalaʃ (i)* **1** /vt/ to oust, throw out. *qalaʃuu min il-firqa* they threw him out of the team. **2** /vi/ *[soccer]* **2a** to miss completely or graze the ball (in aiming a kick). **2b** to be missed completely or be grazed (of a ball at which a kick has been aimed). - vn *qalʃ, qalaʃaan*; ava *qaaliʃ*; pva *maqluuʃ*.

اتقلش *ʃitqalaʃ* /vi/ to be ousted, be thrown out. - iva *mitqiliʃ*.

انقلش *ʃinqalaʃ* = *ʃitqalaʃ*. - iva *minqiliʃ*.

قلّش *qallif* = *qalaʃ*. - vn *taqliiʃ*; ava/pva *miqalliʃ*.

ق ل ش ى ن

قلشين *qalfiin* <T *kalçın* from It> /coll n pl *qalaʃiin*/ puttee(s).

قلشينة *qalfiina* /unit n, pl *-aat*/ a puttee.

ق ل ص

قلص *qalaṣ (i)* /vi/ **1** to move back onto the hindlegs (of a horse). *ʔil-ḥuṣaan qalaṣ* the horse reared back. **2** to sit back on the hindlegs (of a horse). **3** to make a break for it. - vn *qalṣ, qalaṣaan*; ava *qaaliṣ*.

قلصة *qalṣa* /pl *-aat*/ instance noun of *qalṣ*.

قلّص *qallaṣ* = *qalaṣ*. - vn *taqliiṣ*; ava *miqallaṣ*.

تقلّص *taqalluṣ*↑ /n pl *-aat*/ contraction, cramp.

[1] ق ل ط

قلط *qalaṭ (u)* /vt/ *[coarse]* to excrete an *qalluuṭ*. - vn *qalṭ*; ava *qaaliṭ*; pva *maqluuṭ*.

قلطة *qalṭa* /pl *-aat, qulaṭ/ [coarse]* instance noun of *qalṭ*.

قلّوط *qalluuṭ* /n pl *qalaliiṭ/ [coarse]* large firm turd (produced by a human).

اتقلط *ʔitqalaṭ* /vi/ *[coarse]* to be excreted (of an *qalluuṭ*). - iva *mitqiliṭ*.

قلّط *qallaṭ* /vt/ *[coarse]* to excrete *qalaliiṭ*. - vn *taqliiṭ*; ava *miqallaṭ*.

[2] ق ل ط

قلط *qiliṭ* /adj */ arrogant, conceited.

أقلط *ʔaqlaṭ* /el/ more/most arrogant.

قلاطة *qalaaṭa* /n/ arrogance, pride and conceit, haughtiness.

قليط *qaliiṭ* /adj pl *qulaṭa/* arrogant, conceited.

اتقالط *ʔitqaaliṭ* /vi/ to behave arrogantly. - ava *mitqaaliṭ*.

[3] ق ل ط

قليطة *qaliiṭa* /n pl *qalaayiṭ/ [path]* varicocele.

قيلط *qeelaṭ* /vi/ to develop an *qaliiṭa*. ‖*qeelaṭt*[i] *mil-ɛiyaal dool* I suffered much worry and pain on account of those children. - ava *miqeelaṭ*.

[1] ق ل ع

قلع *qalaɛ (a)* /vt/ **1** to pull out, uproot. *laazim tiqlaɛ id-dirs*[i] *da* you must have that molar pulled. ‖ *ʔizraɛ ibn*[i] *ʔaadam yiqlaɛ-ak [prov]* ≈ if you help make a man strong he will destroy you (comment on human ingratitude). **2** to take off, pull off (clothing, jewelry). *naam min ɣeer ma yiqlaɛ hiduum-u* he went to sleep without undressing. *qalaɛit id-dibla* she took off her ring. — /vi/ **3** to undress. *qalaɛ malṭ* he stripped naked. **4** to change from outdoor clothes to indoor clothes or nightwear. - vn *qalɛ, qalaɛaan*; ava *qaaliɛ*; pva *maqluuɛ*.

مقلاع *muqlaaɛ, miqlaaɛ* /n pl *maqaliiɛ/* slingshot, catapult.

اتقلع *ʔitqalaɛ* /vi/ **1** to be pulled out, be uprooted. *ʔiʃ-ʃagara tqalaɛit* the tree was uprooted. **2** to be taken off, be pulled off (of clothing, jewelry). - iva *mitqiliɛ*.

انقلع *ʔinqalaɛ* = *ʔitqalaɛ*. - iva *minqiliɛ*.

قلّع *qallaɛ* /vt/ **1** to pull out, uproot (a number of things). *qallaɛ sinaan-i kull-a-ha* he pulled out all my teeth. *qallaɛ ʔiʃ-ʃital* he pulled up all the seedlings. **2** to cause to take off (clothing, jewelry). *ʔil-ɛasaakir qallaɛuu hduum-u* the soldiers made him undress. — /vi/ **3** to run (off). *ʔawwil ma ʃaf-ni raaḥ miqallaɛ* as soon as he saw me he took to his heels. *qallaɛ waraaha* he tore after her. - vn *taqliiɛ*; ava/iva *miqallaɛ*.

تقليعة *taqliiɛa* /n pl *taqaliiɛ*/ **1** craze, fad, (passing) fancy. *kull*[i] *yoom bi-yiṭlaɛ bi-taqliiɛa gdiida* every day he comes up with a new craze. - /adjectivally/ *raagil taqliiɛa* a man given to eccentric behaviour. **2** *[rur obsol]* performance given by itinerant players.

اتقلّع *ʔitqallaɛ* /vi/ passive of *qallaɛ*. - iva *mitqallaɛ*.

[2] (ق ل ع)

قلع *qilɛ, qalɛ* /n pl *quluuɛ, qilaaɛ*/ **1** sail. **2** sailcloth, tent-cloth.

قلعة *qalɛa* /n pl *-aat*/ **1** fortress. **2** *ʔil-qalɛa'* **2a** the Citadel (of Muhammad Ali, east of Cairo, on the Muqattam Hills). **2b** district around the Citadel.

ق ل ع ط

قلعط *qalɛaṭ* /vt/ *[deris]* to pay excessive attention to the arrangement of (clothes, personal adornment). - vn *qalɛaṭa*; ava/pva *miqalɛaṭ*.

قلعاط *qilɛaaṭ* = *qalɛuuṭ*.

قلعوط *qalɛuuṭ* /n pl *qalaɛiiṭ/ [abus]* ≈ stuck-up bastard, pompous twit.

اتقلعط *ʔitqalɛaṭ* /vi/ **1** passive of *qalɛaṭ*. **2** to primp, preen. **3** to behave like an *qalɛuuṭ*. - vn *tiqalɛiiṭ*; ava *mitqalɛaṭ*.

ق ل ف

قلفة *qalafa* /n pl *-aat*/ foreskin, prepuce. - also *ɣalafa*.

ق ل ف ط

قلفط *qalfaṭ* <prob It *calafatare*> /vt/ **1** to caulk. **2** to make (s.th.) acceptable in appearance (but not necessarily in reality). *qalfaṭ il-ɛimma* he made the turban neat and perfectly shaped. *qalfaṭ-lu ʃ-ʃuɣlaana ɛala ma timʃi min ɣuddaamu* just do the job so it will look O.K. to him till you leave. - vn *qalfaṭa*; ava/pva *miqalfaṭ*.

قلفاط *qilfaaṭ* /n pl *qalafiiṭ/* **1** caulking-chisel. **2a** one whose work is quickly and superficially performed. **2b** confidence trickster.

قلفطي *qalafṭi* /n pl *-yya*/ caulker.
اتقلفط *ʔitqalfaṭ* /vi/ passive of *qalfaṭ*. - iva *mitqalfaṭ*.

ق ل ف ن
قلفونيّة *qalafuniyya* <Gr> /n/ rosin, colophony, resin.
قلفن *qalfin* /vt/ to cover or coat with *qalafuniyya*. *qoos ik-kamanga ma-ygib-f^{i} ṣoot min ṛeer ma nqalfin-u* the violin bow doesn't produce sound unless it is rubbed with rosin. - vn *qalfana*; ava/pva *miqalfin*.
اتقلفن *ʔitqalfin* /vi/ to be covered or treated with *qalafuniyya*. - vn *tiqalfiin*; iva *mitqalfin*.

ق ل ق [1]
قلق *qiliq (a)* /vi/ **1** to become worried or anxious. **2a** to wake suddenly. *qiliqt^{a} ɛala ṣoot ɛarabiyya* I woke at the noise of a car. **2b** to be restless and unable to sleep. *qaɛadt^{i} qalqaan ṭuul il-leel* I was tossing and turning all night long. - vn *qalaq, qalaqaan*; ava *qalqaan*.
قلق *qalaq^{I} (i)* /vt/ to cause to worry, make anxious, disturb. *ʔeeh illi qalaq-ak ɛalee* what's making you worry about him? - vn *qalaq, qalaqaan*; ava *qaaliq*.
اتقلق *ʔitqalaq* /vi/ **1** to be made worried or anxious. **2** to be woken from, or disturbed in, one's sleep. - iva *mitqiliq*.

ق ل ق [2]
قلق *qalaq^{2}* /n/ smudge of dirt (on the seat of a garment).
قلقة *qalaqa* = *qalaq*.
قلّق *qallaq* **1** /vt/ to soil, dirty the seat of (a garment). *qallaq ig-gallabiyya* he got the seat of his galabiya dirty. **2** /vi/ to become soiled, become dirty (of a garment). - ava/iva *miqallaq*.

ق ل ق ا س
قلقاس *qulqaas* <Gr *kolokasia*> /coll n/ taro (Colocasia antiquorum).
قلقاسة *qulqaasa* /pl *-aat*/ unit noun of *qulqaas*.
قلقاسايّة *qulqasaaya* = *qulqaasa*.

ق ل ق ل
قلقل *qalqal, qalqil* /vt/ **1a** to work (s.th.) loose. *qalqilt il-musmaar min il-ḥeeṭa* I wriggled the nail out of the wall. **1b** to budge (s.th. heavy). *ma-qdirt^{i}-ʃ ʔaqalqal id-dulaab min makaan-u* I couldn't budge the wardrobe from its place. **2** to cause to falter or waver. *kalaam-u qalqal-ni* his words made me waver. — /vi/ **3** to falter, waver. *qalqal fif-fihaada quddaam il-maḥkama* he faltered in (his) testimony before the court. *lamma geet ʔasammaɛ qalqalt* when I came to recite I stumbled (over the text). - vn *qalqala*; ava/iva *miqalqil, miqalqal*.
قلقيل *qulqeel* /coll n/ clods of earth.
قلقيلة *qulqeela* /unit n, pl *-aat, qalaqiil*/ a clod of earth.
اتقلقل *ʔitqalqal, ʔitqalqil* /vi/ **1a** to work loose, be worked loose. **1b** to budge, be budged. **2** to falter or waver, be made to falter or waver. - ava/iva *mitqalqal, mitqalqil*.

ق ل ل [1]
قلّ *qall (i)* **1** /vt/ to reduce, lessen, decrease. *ʔil-ɛiyuub bi-tqill^{i} qiimit il-qumaaʃ* defects reduce the value of the cloth. *ʔiṭ-ṭamaɛ yiqill^{i} ma gamaɛ [prov]* ≈ greed will make you lose even what you have (while you are too busy thinking about how to get more). ‖*qall^{i} ʔadab-u ɛalayya* he was rude to me. **2** /vi/ to become less, decrease. *ʔil-xuṭuura qallit* the danger lessened. *xiyaab-i miʃ ḥa-yqill^{a} ɛan yomeen* I'll be away at least two days. *kull^{i} ma s-sinn^{i} yqill ...* the younger one is .... - vn *qall, qalalaan, qilla, qilliyya*; ava *qaalil*; pva *maqluul*.
قلّة *qilla* /n/ scarcity, scantiness. *qillit il-ɛaql* foolishness, silliness. *qillit il-ʔadab* impoliteness, bad manners. ‖*ʔaḥsan min qillit-ha* better than nothing. *-min qillit ma-fii-ʃ* for lack of anything better, as in *bi-naakul ɛeeʃ ḥaaf min qillit ma-fii-ʃ* we are eating dry bread because there is nothing else we can afford.
قليل *qaliil* **1** /adj pl *qulalaat*, in constr only/ lacking in, having little of. *qaliil il-baxt* unlucky. ‖*qaliil id-diin* (1) one who does not observe religious practices. (2) cheat. **2** /n/ small amount, small number. *ɛadad-hum qaliil* they are few in number. *raaḍi b-qaliil-(u)* content with little. ‖*faat il-kitiir ma-baqaa-ʃ ʔilla l-qaliil* ≈ the worst is over. **3** /adv/ **3a** little, not much. *nimt^{i} qaliil* I didn't get much sleep. **3b** rarely. *qaliil lamma yiksab* he rarely earns any money. *bi-nfuuf-u qaliil* we don't see much of him.
قليّل *qulayyil* **1** /adj */ little, few. *naas qulayyiliin* few people. *maɛaaya filuus qulayyila* I have little money with me. *ʔiṣ-ṣubḥ^{i} badri it-tukúsa qlayyila fif-ʃawaariɛ* early in the morning there are few taxis in the streets. **2** /n/ small amount, small number. *ɛaayiʃ bil-qulayyil* he lives on little. **3** /adv/ **3a** little, not much. *ɛandu suxuniyya wi-b-yaakul qulayyil* he has a fever and doesn't eat much. **3b** rarely. *ma-b-aruḥ-ʃ^{i} hnaak ʔilla qlayyil* I go there only rarely.
أقلّ *ʔaqall* /el/ less/least, fewer/ fewest etc. *ʔaqall^{i} ṣoot bi-yxawwif-ha* the slightest sound scares her. *huwwa ʔaqall^{i} minni fis-sinn* he is younger than me. *da ʔaqall^{i} waaḥid bi-yiʃtaval* he's the one who works the least. ‖*ʔaqall^{i} min il-qaliil* ≈ less than nothing. - *ʔaqall^{i} ma fiiha* and *ɛala l-ʔaqall* at least.

أقلّيّة ʔaqalliyya↑ /n pl -aat/ minority.
اتقلّ ʔitqall /vi/ to be reduced, lessened, or decreased. - iva *mitqall*.
انقلّ ʔinqall = ʔitqall. - iva *minqall*.
قلّل qallil /vt/ to reduce, lessen, decrease. *qallil (min) suxunt-u* he reduced its heat. *b-aḥaawil ʔaqallil (min) it-tadxiin* I'm trying to cut down on smoking. - vn *taqliil*; ava *miqallil*.
اتقلّل ʔitqallil /vi/ to be reduced, be lessened, be decreased. - iva *mitqallil*.
استقلّ ʔistaqall **1** /vt/ to deem trifling, consider to be of little value. *bi-yistaqall[a] ʕaql-i* he underrates my intelligence. *ʔistaqall il-murattab* he thought the salary a pittance. **2** /vi/ to become independent, become separate. *ʔif-faʕb[i] bi-yṭaalib bil-istiqlaal* the people are demanding independence. - vn *ʔistiqlaal*; ava *mistaqall, mistiqill*.
مستقلّ *mustaqill* /adj */ independent.

ق ل ل [2]
قلّة *qulla* /n pl *qulal*/ earthenware water-jug (see Pl.A, 1). ‖*kasarna waraa qulla* ≈ we said 'good-bye and good riddance' when he left! - *ḍarab bil-qulla* to bray angrily and thrust out the tongue so it looks like a water-jug, (of a camel).
قللي *qulali* /n pl -*yya*/ maker or seller of earthenware water-jugs.
القللي *ʔil-qulali* /prop n/ quarter in Cairo, immediately to the south-west of the main railway station.

ق ل ل [3] see ق و ل [1]: *qill*

ق ل ل و س
قلّوسة *qalluusa* /n pl -*aat, qalaliis*/ *[Chr]* hat worn by Greek and Coptic Catholic clergy.

ق ل م
قلم *qalam* /n pl *ʔiqlima, ʔiqlaam, qilma*/ **1** pen, pencil. *qalam ʔabanoos* or *qalam ḥibr* fountain pen. *qalam gaaff* ball-point pen. *qalam basṭ* reed pen (as used by calligraphers). ‖*furfa qalam* pointed brush. - *ḥagar qalam* pen-light battery. **2** *[hort]* **2a** stalk, shoot. *ʔif-faġara gaabit ʔiqlaam* the tree put out shoots. **2b** type of grafting. **3** department, division. *qalam il-muruur* Traffic Control Board. **4** slap (especially on the face). *ʔiddeet-u qalam miʃ ḥa-yquum minnu ʃahr[i] ʃahreen* I gave him a slap that will take him a couple of months to recover from! ‖*waaxid qalam fi-nafs-u* he's stuck-up.
مقلمة *maqlama* /n pl -*aat*/ pen or pencil case.
قلّم *qallim* /vt/ **1** to trim, clip. *bi-nqallim in-naxl[i] marriteen fiʃ-ʃita* we prune the palms twice during the winter. **2** to stripe. *qumaaʃ miqallim* striped cloth. - vn *taqliim*; ava/pva *miqallim*.
اتقلّم *ʔitqallim* /vi/ passive of *qallim*. - iva *mitqallim*.

ق ل ن see ق و ل و ن: *qawloon*

ق ل و
قلوي *qalawi* /adj/ alkaline.
قلويّة *qalawiyya* /n pl -*aat*/ **1** alkali: **2** alkalinity.

ق ل و ح see also ق و ل ح
قالوح *qaluuḥ* /coll n/ corn cob(s).
قالوحة *qaluuḥa* /unit n, pl -*aat, qawaliiḥ*/ a corn cob. - also *kaluuḥ*.

ق ل و ظ
قلاووظ *qalawooz, qalawuuz* <T *kılavuz*> /n/ **1** thread (of a screw). *musmaar qalawooz* screw. *lamba qalawooz* screw-in light-bulb. **2** /pl -*aat*/ screw.
قلوظ *qalwaz* /vt/ **1** to cut a thread, form a thread on. **2** to fix by screwing. *qalwaz il-mawasiir ʕala baʕḍ* he screwed the pipes together. **3** to form into a ball shape. *xudi l-ʕagiina di qalwaẓii-ha* take this piece of dough and make it into a ball. - vn *qalwaẓa*; ava/pva *miqalwaz*.
مقلوظ *miqalwaz* /adj/ *[joc]* finely formed, nicely put together. *ʕimma mqalwaẓa* a nicely wrapped turban. *ḥikaaya mqalwaẓa* a neat story. ‖*gitta mqalwaẓa* curvaceous figure.
اتقلوظ *ʔitqalwaz* /vi/ passive of *qalwaz*. - iva *mitqalwaz*.

ق ل ى [1]
قلى *qala (i)* /vt/ **1** to fry. *samak maqli* fried fish. **2** to roast (grains, cereals etc.). *bunn[i] maqli* roasted coffee beans. - vn *qalỳ, qaliyya, qalayaan*; ava *qaali*; pva *maqli*.
قلية *qalya* /inst n, pl -*aat*/ **1** a (single) frying. **2** amount of food used in a single frying.
قليّة *qaliyya* = *qalya*.
مقليّات *maqliyyaat* /pl n/ fried foods.
قلاّية *qallaaya[1]* /n pl -*aat*/ deep fryer.
مقلة *maqla[1]* /n pl -*aat, maqaali*/ container for roasting coffee beans.
مقلة، مقلى *maqla[2], miqla* /n pl -*aat*/ shop selling nuts, popcorn, roasted seeds etc., snack shop.
مقلاية *maqlaaya* = *maqla[1]*.
اتقلى *ʔitqala* /vi/ to be fried. - iva *mitqili*.
انقلى *ʔinqala* = *ʔitqala*. - iva *minqili*.

قلى *ʔalla* /vt/ **1** to fry lightly. **2** to keep (s.o.) on tenterhooks. — /vi/ **3** to make *taʔliyya*. - vn *taʔliyya*; ava *miʔalli*.

تقلية *taʔliyya* /n/ any of a variety of combinations of onions and/or garlic with other ingredients, fried and used as a garnish or to enrich stock or sauce.

اتقلى *ʔitʔalla* /vi/ **1** to be fried lightly. **2** to be kept on tenterhooks. **3** (impersonal) passive of *ʔalla* 3. *ʔil-ʔakla di ma-yitʔalla-lhaa-ʃ* this dish is not made with *taʔliyya*. - iva *mitʔalli*.

ق ل ي [2]
قلاية *ʔallaaya*[2] /n pl *ʔalaali, ʔallayaat*/ *[Chr]* monk's cell.

ق ن ب ع see ق م ب ع

ق م ح
قمح *ʔamḥ* /coll n/ wheat.
قمحة *ʔamḥa* /unit n, pl *-aat*/ **1** a grain of wheat. **2** measure of weight (for metals and precious stones) equal to 0.07523 grains troy weight.
قمحاية *ʔamḥaaya* = *ʔamḥa* 1.
قمحي *ʔamḥi* /adj invar/ light brown, wheat-coloured (especially of human face and features).

ق م ر [1]
قمر *ʔamar* /n pl *ʔaʔmaar*/ **1** moon. *ʔamar ʂinaaʕi* satellite. ‖ *ʔamar id-diin* sheet(s) of dried, pressed apricots; drink made by dissolving the sheet in water; pudding made from the sheet. - *ḥagar il-ʔamar [min]* selenite. **2** epithet for a beautiful person. *ya bint*[1] *ya ʔamar* ≈ you gorgeous girl!
قمرة *ʔamara*[1] /n/ **1a** moonlight. - /adjectivally/ *leela ʔamara* a moonlit night. **1b** a moonlit place. — /pl *-aat*/ **2** beautiful girl. **3** aperture in or above a door for the purpose of admitting light.
قمري *ʔamari, ʔamari* /adj/ lunar. *ʔis-sana l-ʔamariyya* the lunar year, lunar calendar.
قمرية *ʔamariyya* /n pl *-aat*/ **1** skylight. **2** arbour.
قمراية *ʔamaraaya* /n/ **1** moonlight. **2** moonlit place.
قمراتي *ʔimaraati* /n pl *-yya*/ glazier.
قمور *ʔammuur* /adj */ cute, sweet, darling.

ق م ر [2]
قمري *ʔimri, ʔumri* /coll n/ variety of turtle-dove.
قمرية *ʔimriyya, ʔumriyya* /unit n, pl *-aat*/ a turtle-dove.

ق م ر [3]
قمار *ʔumaar* /n/ gambling.
قمارتي *ʔumarti, ʔamarti* /n pl *-yya*/ gambler, gamester.

ق م ر [4]
قمّر *ʔammar* **1** /vt/ to soften (stale bread) by heating. ‖ *ʃaxalli ʔafaa-k yiʔammar ʕeef* I'll give you a burning slap on the nape! - *rigiʕ ʔafaa yiʔammar ʕeef* he returned humiliated. **2** /vi/ to become softer by heating (of stale bread). - vn *taʔmiir*; ava/pva *miʔammar*.
اتقمّر *ʔitʔammar* /vi/ to be softened by heating (of stale bread). - iva *mitʔammar*.

ق م ر [5]
قمرة *ʔamara*[2] <It *camera*> /n pl *-aat*/ cabin (in a ship).

ق م ز
اتقمّز *ʔitʔammiz* /vi/ to move flauntingly. - vn *taʔmiiz*; ava *mitʔammiz*.

ق م س
قاموس *ʔamuusˁ* /n pl *ʔawamiis*/ dictionary.

ق م ش [1]
قمشة *ʔamʃa*[1] /n/ (type of) cloth. *ʔiʂ-ʂuuf da ʔamʃit-u miʃ kuwayyisa* this wool is of poor quality.
قماش *ʔumaaʃ* /n pl *ʔaʔmiʃa, ʔumaʃaat*/ cloth, fabric.
قماشة *ʔumaaʃa* /unit n, pl *-aat*/ **1** piece of cloth. **2** (type of) cloth.
قمّاش *ʔammaaʃ* /n * and pl *ʔammaaʃa*/ cloth vendor.
اتقمّش *ʔitʔammiʃ* /vi/ to dress in one's best clothes. - ava *mitʔammiʃ*.

ق م ش [2]
قمشة *ʔamʃa*[2] <T *kamçi*> /n pl *-aat*/ whip, lash used by cart-drivers.

ق م ص [1]
قمص *ʔamaṣ (u)* /vt/ to cause to sulk, cause to be sulky. - vn *ʔamṣ, ʔamaṣaan*; ava *ʔaamiṣ*; pva *maʔmuuṣ*.
اتقمص *ʔitʔamaṣ* /vi/ **1** to sulk. **2** to be made sulky. - ava/iva *mitʔimiṣ*.
انقمص *ʔinʔamaṣ* = *ʔitʔamaṣ*. - ava/iva *minʔimiṣ*.
قمّص *ʔammaṣ* /vi/ to buck (of a donkey). - vn *taʔmiiṣ*; ava *miʔammaṣ*.

ق م ص [2]
قميص *ʔamiiṣ* /n pl *ʔumṣaan, ʔiʔmiṣa, ʔimíṣa*/ **1** shirt. *ʔumṣaan noom* nightgowns. *ʔamiiṣ taḥtaani* slip. **2** piston-casing.
قمصانجي *ʔumṣangi* /n pl *-yya*/ shirtmaker.

[3] ق م ص see ق م م ص: *qummuṣ*

ق م ط

قمط *qamaṭ (u)* /vi/ to tighten (on or around), squeeze. - vn *qamṭ, qamaṭaan*; ava *qaamiṭ*; pva *maqmuuṭ*.

قمطة *qamṭa* /n/ **1** /pl *-aat*/ instance noun of *qamṭ*. **2** /pl *-aat, qumaṭ*/ **2a** strip or piece of black cloth, tied like a brow-band, worn to keep a woman's head-covering in place. **2b** vice, clamp.

قماط *qumaaṭ* /n pl *ʃiqmiṭa*/ **infant's binder (worn while the navel heals).**

قمّاطى *qammaaṭi: ṭaɛmiyya qammaaṭi* **finger-shaped** *ṭaɛmiyya*.

قمّط *qammaṭ* **1** /vt/ to swaddle the belly of (an infant) with an *qumaaṭ*. **2** /vi/ to become tight. - vn *taqmiiṭ*; ava/pva *miqammaṭ*.

اتقمّط *ʃitqammaṭ* /vi/ **1** to be swaddled on the belly with an *qumaaṭ* (of an infant). **2** to affect tight clothes (e.g., of a hippie). **3** to become starchy in behaviour. - ava/iva *mitqammaṭ*.

ق م ع

قمع *qumɛ* /n pl *ʃiqmaaɛ*/ **1 funnel.** ‖*qumɛ[i] sukkar* sugar loaf. - *ɛaamil qumɛ* **he's showing off.** **2** *[bot]* calyx.

قمّع *qammaɛ* /vt/ to remove the stem end or calyx. *qammaɛit il-firawla* she hulled the strawberries. *taqmiiɛ il-bamya* topping the okra. - vn *taqmiiɛ*; ava/pva *miqammaɛ*.

اتقمّع *ʃitqammaɛ* /vi/ **1** to have the stem end or calyx removed. **2** to swagger, behave in a conceited manner. *ʃinta b-titqammaɛ ɛala miin* who are you being so high and mighty with! - ava/iva *mitqammaɛ*.

ق م ق م

قمقم *qumqum* /n pl *qamaaqim*/ **bottle with long narrow neck, used for sprinkling scented water.** ‖*sakniin fi-qumqum* they live in a tiny place.

ق م ل

قمل *qaml* /coll n/ lice.

قملة *qamla* /unit n, pl *-aat*/ a **louse.** ‖*zayy il-qamla f-raas il-ʃaqraɛ [prov]* **(as insecure) as a louse on a bald head.**

قملاية *qamlaaya* = *qamla*.

قمّل *qammil* /vi/ to become **infested with lice,** become lousy. - vn *taqmiil*; ava *miqammil*.

ق م م

قمّة *qimma* /n pl *qimam*/ **1 (also** *qimmaṫ***)** top, apex. ‖*muʃtamar qimma* summit conference. **2** *[rur]* street corner.

ق م م ص

قمص *qummuṣ* /n pl *qamamṣa*/ *[Chr]* archpriest, hegumen.

ق م ى ن

قمينة *qamiina* <prob Gr *kaminos*> /n pl *qamaayin*/ **kiln.**

ق ن ا

قنا *qina* /prop n/ **1** Qena, province in middle-Upper Egypt. **2** Qena, capital of the province of that name, a town well known for its earthenware products.

قناوى *qinaawi* **1** /adj invar/ pertaining to Qena. **2** /n * and pl *qinawiyya*/ an inhabitant of Qena.

ق ن ا ل

قنال *qanaal* <Fr>: *qanaal is-siwees* or *ʃil-qanaal* the Suez Canal. - also *kanaal*.

ق ن ب

قنّب *qinnib* /n/ twine, hemp. *ḥabl[i] qinnib* a turned hemp rope.

ق ن ب ر

قنبر *qambar* **1** /vt/ to cause (usually posteriors or bosoms) to protrude or bulge. *hiyya labsa sutyaan bi-yqambar bizaz-ha* she is wearing a bra that gives her breasts prominence. **2** /vi/ to become prominent, protrude, bulge. - vn *qambara*; ava/pva *miqambar*.

اتقنبر *ʃitqambar* /vi/ to become or be made prominent or bulging (especially of posteriors or bosoms). - vn *tiqambiir*; iva *mitqambar*.

ق ن ب ع

قنبع *qambaɛ* /vi/ to put out seed pods (of a plant). - vn *qambaɛa*; ava *miqambaɛ*.

قنبعة *qumbiɛa* /n pl *-aat*/ seed pod.

قنبوعة *qambuuɛa* /n pl *-aat*/ one of the connecting pieces which make up a *mafrafiyya* design (see Pl.G, 5).

ق ن ب ل

قنبلة *qunbila, qunbula* /n pl *qanaabil*/ bomb, shell. *qanaabil zamaniyya* time-bombs. *qunbila yadawiyya* hand-grenade.

ق ن ت

قنوت *qunuut: duɛaaʃ il-qunuut [Isl]* special prayer of petition inserted after the second morning *rakɛa*.

ق ن د ل ¹
قندل *qandil* /vt/ to botch, make a mess of. *ʃin-naggaar ga yiṣallaḥ iṭ-ṭarabeeza qandil-ha* the carpenter came to repair the table and made a mess of it. ‖ *baxt¹ mqandil* wretched luck. - vn *qandala*; ava/pva *miqandil*.
مقندل *miqandil* /n */ hopeless blunderer, good-for-nothing.
اتقندل *ʃitqandil* /vi/ **1** to be or become botched or messed up. **2** to fail utterly, flop. ‖ *ʃitqandil* ≈ go to hell! - vn *tiqandiil*; ava/iva *mitqandil*.

ق ن د ل ²
قنديل *qandiil* /n pl *qanadiil*/ **1** oil-lamp. ‖ *wallaɛ-lu qandiil* he praised him in front of everyone. - *ṣalaat il-qandiil [Chr]* prayer accompanying the unction of the sick, traditionally said in private homes as a blessing during Lent. **2** jellyfish.
قنديلة *qundeela: balaḥ qundeela* type of yellow date.

ق ن ز ح
قنزح *qanzaḥa* /n/ *[deris]* snobbishness.
قنزوح *qanzuuḥ* /adj pl *qanaziiḥ*/ *[deris]* snob.
اتقنزح *ʃitqanzaḥ* /vi/ *[deris]* to behave snobbishly. - vn *tiqanziiḥ*; ava *mitqanzaḥ*.

ق ن ص ¹
قنص *qanaṣ (i)* /vt/ to cause to become sulky or moody. - vn *qanṣ*; ava *qaaniṣ*; pva *maqnuuṣ*.
قنصة *qanṣa* instance noun of *qanṣ*.
اتقنص *ʃitqanaṣ* /vi/ to become or be made sulky or moody. - ava/iva *mitqiniṣ*.

ق ن ص ²
قونصة *qunáṣa* /n pl *qawaaniṣ*/ gizzard.
قناصة *qunaaṣa* /n pl *qawaniiṣ*/ gizzard.

ق ن ص ل
قنصل *qunṣul* <perh It *console*> /n pl *qanaaṣil*/ consul. ‖ *bint il-qunṣul* poinsettia.
قنصليّة *qunṣuliyya* /n pl *-aat*/ consulate.
اتقنصل *ʃitqanṣal* /vi/ to behave snobbishly. *ma-ṭḥibb¹-ʃ ḥadd¹ yitqanṣal ɛaleeha* she doesn't like anybody treating her disdainfully. - ava *mitqanṣal*.

ق ن ط
قنط *qiniṭ* /adj * and pl *qunaṭa*/ disdainful, pernickety (usually in respect of food).
أقنط *ʃaqnaṭ* /el/ more/most disdainful.
قناطة *qanaaṭa* /n/ disdain, pernicketiness (usually in respect of food).
اتقنّط *ʃitqannaṭ* /vi/ to behave disdainfully. - ava *mitqannaṭ*.
اتقانط *ʃitqaaniṭ* = *ʃitqannaṭ*. - ava *mitqaaniṭ*.
استقنط *ʃistaqnaṭ* = *ʃitqannaṭ*. - vn *ʃistiqnaaṭ*; ava *mistaqnaṭ*.

ق ن ط ر ¹
قنطر *qanṭar* /vt/ **1** to arch, bend in a curve. *qanṭar ḍahr-u* he arched his back. **2** to bend or hang (s.th, s.o.) over, drape. *qanṭar rooḥ-u min il-balkoona* he leant out over the balcony. - vn *qanṭara*; ava/pva *miqanṭar*.
قنطرة *qanṭara* /n pl *qanaaṭir*/ **1** arch. **2** bridge. ‖ *ʃil-qanaaṭir il-xayriyya* /prop n/ the Barrages, situated fifteen miles north of Cairo at the entrance of the Nile Delta. **3** (saddle) pommel.
اتقنطر *ʃitqanṭar* /vi/ **1** to be arched, be bent in a curve. **2a** to be bent or be hung (over), be draped. **2b** to bend or hang oneself (over), drape oneself (over). - ava/iva *mitqanṭar*.

ق ن ط ر ²
قنطار *qinṭaar* /n pl *qanaṭiir*/ measure of weight equal to 44.93 kg. ‖ *bil-qinṭaar* ≈ by the hundredweight! as in *bi-ṭḥibb il-manga - bil-qinṭaar* do you like mangoes? - very much, indeed!

ق ن ع ¹
قنع *qunuɛ, qiniɛ (a)* /vi/ to become content, or satisfied. *ʃil-qanaaɛa kinz [prov]* contentment (with one's lot) is a (limitless) treasure. - vn *qanaaɛa, qanaɛaan, qunuɛiyya*; ava *qaaniɛ, qanɛaan*.
قنع *qanaɛ (i)* /vt/ **1** to convince. *laazim tiqniɛ-u b-ʃinnak ṣaḥḥ* you must convince him that you're right. **2** to satisfy. *ʃaqall¹ luqma tiqniɛ-u* the slightest morsel satisfies him. - vn *qanaɛaan*; ava *qaaniɛ*; pva *maqnuuɛ*.
قنوع *qanuuɛ* /adj * and pl *qunaaɛ*/ content, satisfied.
اتقنع *ʃitqanaɛ* /vi/ **1** to be convinced. **2** to be satisfied. - iva *mitqiniɛ*.
أقنع *ʃaqnaɛ, ʃaqnaɛ* /vt/ to convince. - vn *ʃiqnaaɛ*; ava *muqniɛ*.
اقتنع *ʃiqtanaɛ, ʃiqtanaɛ* /vi/ to be convinced. *li-yaayit in-naas ma tiqtiniɛ* until people are convinced. - ava *muqtaniɛ, miqtiniɛ*.
استقنع *ʃistaqnaɛ↓* = *qunuɛ*. - ava *mistaqnaɛ*.

ق ن ع ²
قناع *qinaaɛ↑* /n pl *ʃaqniɛa*/ mask.

ق ن ع ر
قنعر *qanɛar* /vt/ *[deris]* to raise or put into prominence

(s.th., usually part of the body) in an ostentatious and arrogant fashion. - vn *qanɛara*; ava/pva *miqanɛar*.
قنعرة *qanɛara* /n/ *[deris]* arrogance, pomposity.
قنعور *qanɛuur* /n pl *qanaɛiir*/ *[deris]* braggart.
اتقنعر *ʔitqanɛar* /vi/ to become arrogant or pompous, behave arrogantly or pompously. - vn *tiqanɛiir*; ava *mitqanɛar*.
استقنعر *ʔistiqanɛar↓* = *ʔitqanɛar*. - ava *mistiqanɛar*.

ق ن ف [1]
قنف *qunuf, qinif[1] (a)* /vi/ to become revolted or disgusted. *bi-yiddiɛi ʔinnu qinif min libs-a-ha l-makfuuf* he claims to be disgusted by her revealing clothes. - vn *qanafaan, qanaafa*.
قنف *qinif[2]* /adj */ 1 given to being revolted or disgusted. 2 finicky.
أقنف *ʔaqnaf* /el/ more/most given to feeling disgust or revulsion.

ق ن ف [2] see ق ن ن ا ف : *qunnaafa*

ق ن ف د
قنفد *qunfid* /n pl *qanaafid*/ hedgehog.
قنفد *qanfid* 1 /vt/ to cause to curl up like a hedgehog. *ʔil-bard[1] qanfid-ni* the cold made me curl up like a hedgehog. 2 /vi/ to curl up like a hedgehog from the cold. - vn *qanfada*; ava/pva *miqanfid*.
اتقنفد *ʔitqanfid* /vi/ to curl up like a hedgehog. - vn *tiqanfiid*; iva *mitqanfid*.

ق ن ف ذ see ق ن ف د

ق ن ل see ق ن ا ل : *qanaal*

ق ن م see ق ن ن و م : *qannuuma*

ق ن ن [1]
قانون *qanuun[1], qanuun* /n pl *qawaniin, qawaniin*/ law, canon. ‖ *bil-qanuun* in a carefully calculated fashion, as in *bi-yitkallim bil-qanuun* he weighs his words carefully when he speaks.
قانوني *qanuuni, qanuuni* /adj */ lawful, legal, canonical.
مقنّن *muqannan* /n/ fixed amount, ration, quota. *ɛamal-luhum muqannan* he set them a quota. ‖ *bil-muqannan* in a carefully calculated fashion.

ق ن ن [2]
قانون *qanuun[2]* /n pl *qawaniin*/ *[mus]* zither-like instrument with a large trapezoidal sound-box, set horizontally before the performer (see Pl.J, 23).
قانونجي *qanungi* /n pl *-yya*/ *qanuun* player.

ق ن ن [3]
قنّيّة *qananiyya, qaniniyya* /n pl *-aat, qanaani*/ 1 bottle. 2 *[obsol]* glass drinking-bowl. *mala l-qanaani w-saqaa-hum* he filled the pots of wine and gave them to drink.

ق ن ن ا ف
قنّافة *qunnaafa* /n pl *-aat*/ *[rur]* peg on yoke of a plough to which a draft animal's collar is attached (see Pl.D, 9).

ق ن ن و م
قنومة *qannuuma* /n/ mormyr, a Nile fish (Mormyrus kannume).

ق ن ى
قنا *qana[1] (i)* /vt/ to keep (domesticated animals). *bi-yiqni ħamaam* he keeps pigeons. ‖ *firaax qaniyya* hens kept for laying. - *ya baxt il-qaani*-how lucky the husband is! (flirtatious remark to a woman). - vn *qany, qaniyya*; ava *qaani*; pva *maqni*.
قناة *qana[2]* /coll n, pl *quny*/ irrigation channel(s), small canal(s). ‖ *ʔimfi sana wala txaṭṭi qana [prov]* (walk for a year rather than cross a ditch) ≈ slow but sure is best.
قناة *qanaah↑* /n pl *qanawaat*/ 1 canal. *ʔil-qanaah* or *qanaat is-siwees* the Suez Canal. 2 television channel. — *qanawaat* /pl n/ 3 fallopian tubes.
قناية *qanaaya* /n pl *-aat*/ 1 unit noun of *qana* (see Pl.E, 17). 2 groove.
اتقنى *ʔitqana* /vi/ to be kept (of domesticated animals). - iva *mitqini*.

ق ه ر [1]
قهر *qahar (u)* /vt/ to cause (s.o.) frustration or grief. - vn *qahr*; ava *qaahir*; pva *maqhuur*.
قهر *qahr* /n/ prostrating grief.
قهرة *qahra* /inst n/ 1 state of depression and prostrating grief. 2 sense of oppression and subjugation.
قهران *qahraan* /adj */ oppressed, frustrated.
قاهر *qaahir↑* /adj/ compelling. *ɛuzr[1] qaahir* a compelling excuse.
القاهرة *ʔil-qaahira* /prop n/ Cairo.
قاهري *qahri↑* /adj/ compelling. *ẓuruuf qahriyya* unavoidable circumstances.
قاهري *qaahiri* /adj/ Cairene, pertaining to Cairo.
قهّار *qahhaar* /n/ Vanquishing One, Conquering One (epithet of God).
اتقهر *ʔitqahar* /vi/ to be caused frustration or grief. - iva *mitqihir*.

انقهر ʕinqahar = ʕitqahar. - iva minqihir.

ق ه ر 2
قهر quhr /n/ promiscuity.
قاهر qaahir /adj */ 1 impertinent. 2 promiscuous.

ق ه و
قهوة qahwa 1 /n/ coffee. 2 /n pl qahaawi/ coffee-house, cafe. ‖bitaaɛ qahaawi idler.
قهوجى qahwagi /n pl -yya/ 1 coffee-house proprietor. 2 coffee-house employee.

ق و ب
قوب quub /n/ [path] tetter.
قوبة quuba /n pl -aat/ patch of tetter.
قوباية qubaaya = quuba.

ق و ت
قوت quut /n pl ʕaqwaat/ foodstuff, nourishment. ʕil-quut iḍ-ḍaruuri essential nourishment.
قوّت qawwit /vt/ to feed, nourish. ʕitḥaramit il-maskiina ḥatta min luqma tqawwit-ha the poor woman was denied even a morsel (enough) to keep body and soul together! - vn taqwiit; ava/pva miqawwit.
اتقوّت ʕitqawwit /vi/ to be fed, be nourished. - iva mitqawwit.

ق و ت ب
قوتب qootab /vi/ to become hunched. qootab min kutr ik-kafya ɛaf-fuxl he became hunched from so much bending over (the work). - also ʕitqattib. - ava miqootab.

ق و ح
قاوح qaawiḥ (also kaawiḥ) /vt/ to argue with, wrangle with. qadd iz-zibla wi-mqaawiḥ it-tayyaar [prov] (he is) the size of a (sheep-)dropping and he tries to go against the current. - vn miqawḥa; ava miqaawiḥ.
اتقاوح ʕitqaawiḥ /vi/ to argue, wrangle. - ava mitqaawiḥ.

ق و د
قاد qaad↑ (u) /vt/ to lead, give leadership to. - vn qiyaada; ava qaayid.
قيادى qiyaadi /adj/ leading. door qiyaadi leading role.
قائد qaaʕid↑ /n pl quwwaad, qaada/ leader, commander.
قوّاد qawwaad /n */ pimp.

ق و ر 1
قورة quura /n pl qiwar, quwar, quraat/ 1 forehead. ‖qurt-u dayyaqa he's thick. - ʕifrid qurt-ak cheer up! 2 brow-band (of a bridle).
قوّار qawwaar, quwwaar /n pl qawawiir/ [rur] broken-off bottom of an earthenware jar (used as a water-dish for chickens). ‖kasar waraa l-qawwaar ≈ he said 'good-bye and good riddance' when he left.
قوّارة qawwaara, quwwaara = qawwaar.
مقورة maqwara /n pl maqawiir/ vegetable corer.
مقوار miqwaar or muqwaar = maqwara.
قوّر qawwar 1 /vt/ to scoop out, hollow out. qawwarit ik-koosa she scooped out the courgettes. 2 /vi/ to make a round hollow. qawwar ḥawaleen if-fagara make a hollow around the tree. - vn taqwiir; ava/pva miqawwar.
تقويرة taqwiira /n pl -aat, taqawiir/ curved neckline or sleeve-line (of a garment).
مقوّر miqawwar 1 /adj */ concave. 2 /n pl -aat/ = taqwiira.
اتقوّر ʕitqawwar /vi/ to be scooped out, be hollowed out, become hollow. - ava/iva mitqawwar.

ق و ر 2
قور qawar (i) /vt/ to strain (the eyes). ʕil-muzakra qawarit ɛeen-i studying strained my eyes. - vn qawar, qawaraan; ava qaawir; pva maqwuur.
اتقور ʕitqawar /vi/ to be strained (of the eyes). ‖ʕiftaxal lamma tqawarit ɛeen-u ≈ he worked until his eyes popped out. - iva mitqiwir.

ق و ر م
قاورمة qawirma <T kavurma> /n/ dish of braised meat cooked with onions.

ق و ز ى
قوزى quuzi <T kuzu> /adj invar/ young (of mutton). xaruuf quuzi lamb.

ق و س
قوس qoos /n pl ʕiqwaas/ 1a arc, curve. 1b parenthesis, bracket. ‖ḥuṭṭ' di been qoseen keep this aside, make a mental note of this for the moment. 1c bow. ʕil-qoos [astrol] Sagittarius. qoos rabaaba rebab bow (see Pl.J, 2). qoos il-minaggid cotton-fluffer's bow. 2 plough shaft (see Pl.D, 14).
قوّس qawwis 1 /vt/ to curve, bend in a curve. qawwis il-ɛuud he bent the stick. 2 /vi/ to curve, bend in a curve. ḍahr-u qawwis his back arched. ʕis-saqf' qawwis the ceiling has sagged. - vn taqwiis; ava/pva miqawwis.
اتقوّس ʕitqawwis /vi/ to be curved, be bent in a curve. - iva mitqawwis.

[1] ق و ط

قوّط *ɢawwaṭ* /vt/ to swindle by overcharging. - vn *taɢwiiṭ*; ava/iva *miɢawwaṭ*.

مقوّطاتي *miɢawwaṭaati* /n pl *-yya/* one who swindles by overcharging.

اتقوّط *ʔitɢawwaṭ* /vi/ to be overcharged. - iva *mitɢawwaṭ*.

[2] ق و ط

قوطة *ɢuuṭa* /coll n/ tomato(es).

قوطاية *ɢuṭaaya* /unit n, pl *-aat*/ a tomato.

ق و ط ع

قوطع *ɢooṭaɛ, ɢooṭiɛ* /vi/ to make a guess concerning things supposed to be known only to God (e.g., life span, future gains etc., such an act being tantamount to blasphemy). *min ɣeer* (or *bala*) *mɢoṭɛa* barring the unforeseen, God willing, as in *ḥa-nsaafir bukra bala mɢoṭɛa* we're leaving tomorrow if all goes well. - also *ɢaaṭiɛ*. - vn *miɢoṭɛa*; ava *miɢooṭaɛ*.

ق و ع

قاع *qaaɛ*↑ /n pl *qiɛaan*/ bottom, bottom part. *qaaɛ il-baḥr* bottom of the sea. ‖*qaaɛ il-ɛeen [anat]* retinâ.

قاعة *qaaɛa*↑ /n pl *-aat*/ hall (e.g., for lectures, concerts). *qaaɛit muḥaḍraat* lecture hall.

قاعة *ɢaaɛa* /n pl *ɢiɛaan, ɢaɛaat/ [rur]* winter room which has a built-in *furn* (q.v.) under a raised floor.

[1] ق و ق

قواق *ɢuwaaɢ* /n/ screeching (like that of an owl). *ʔil-waad ma-baṭṭal-ʃ ɢwaaɢ* the baby never stopped screaming.

قويق *ɢuweeɢ: ʔumm[i] ɢweeɢ* **1** owl. **2** woman of witch-like appearance.

قوّق *ɢawwaɢ* /vi/ **1** to screech. **2** to acquire a pale and withered appearance (especially of the face or features). - vn *taɢwiiɢ*; ava *miɢawwaɢ*.

[2] ق و ق see ق و و ق : *ɢawuuɢ*

ق و ق ع

قوقع *ɢooɢaɛ* /coll n/ snail(s).

قوقعة *ɢuɢáɛa* /n pl *ɢawaaɢiɛ*/ a snail.

تقوقع *ʔitɢawɢaɛ*↑ /vi/ to become introverted, withdraw into one's shell. - ava *mitɢawɢaɛ*.

[1] ق و ل

قال *ɢaal (u)* /vt/ **1a** to utter, say. *ma-ɢult[i]-ʃ kilma* I didn't say a word. *ɢaal (ʔinnu) ḥa-yiigi bukra* he said (that) he would come tomorrow. ‖*ɢuul ya rabb* ≈ rely on God! trust in God! - *ma-tɢul-ʃ[i] kida* don't say such (things)! don't say (things) like that! - *ɣayy[i] ma rabb-i-na yɢuul* as God wills (it). - *tiɢuul ʔeeh* ≈ (it's absurd) but what can one say, what can be done about it? as in *dilwaɢti l-banaat maʃyiin ɛiryaniin laakin tiɢuul ʔeeh* these days girls walk about half-naked, but what is there one can say? - *b-aɢuul(-lak) ʔeeh* (1) say, I say, as in *b-aɢuul ʔeeh - ḥa-tiigi ɛandina bukra* I say, are you coming to see us tomorrow? *b-aɢul-lak ʔeeh - gibt ik-kitaab illi kkallimna ɛalee* say, did you bring the book we were talking about? (2) (I'll) tell you what, as in *b-aɢul-lak ʔeeh - haat ʔinta l-gibna w-ʔana ḥ-aruuḥ ʔagiib il-ɛeef* tell you what, you bring the cheese and I'll go and get the bread, *b-aɢul-lak ʔeeh baɢa - niruuḥ yoom il-itneen* tell you what, then, we'll go on Monday. **1b** to recite, say (poetry). *ɢaɛad yiɢuul mawwaal fi-mawwaal* he continued to recite one *mawwaal* after another. **1c** to tell, recount. *ɢul-li lli ḥaṣal* tell me what happened! *ɢal-li sirr* he told me a secret. *kaan bi-yɢul-lina ɛar-riḥla* he was telling us (something) about the trip. **2** to stipulate. *ʔil-ɢanuun bi-yɢuul is-siwaaɢa ɛal-yimiin* the law requires that driving be on the right-hand side (of the road). *ʔiz-zooɢ yiɢuul laazim ʔaruuḥ* politeness demands that I go. *ʔil-masal bi-yɢuul xud il-habla bint il-ɛaɢla* the proverb recommends one to marry the daughter of a well-balanced mother even if the daughter herself is unbalanced. - vn *ɢool, ɢiwaala, ɢawalaan*; ava *ɢaayil*.

¶ *ɢaal* modal of incredulity ≈ just imagine! fancy that! as in *ɢaal ʔeeh - xaayif min il-ɢuṭṭa* just think! he's afraid of the kitten! *ḥa-yitgawwiz - ɢaal* he's getting married! fancy that! *badal ma ylaaɛib il-ɛayyil ɢaal ʔeeh - yuʃxuṭ fii* instead of playing with the kid - can you credit it - he bawls him out! - *ɢaal... (ɢaal)* exclamation of jeering disbelief ≈ nonsense! baloney! humph! as in *ɢaal hiyya mumassila* so she's an actress - baloney! *ɢaal il-fariiɢ ga yʃuf-ha ɢaal* so the General came to see her, eh? what a load of rubbish! - *(bi-)tiɢuul fiiha* exclamation of strong assertion ≈ no question about it! you bet! you said it! as in *ɢidirt[i] trudd[a] ɛal-mudiir - bi-tɢuul fiiha w-ʃatamt-u kamaan* 'Did you dare to answer the boss back?' 'You bet I did! and I cursed him too!' *ʔeeh raʃy-ak nirawwaḥ nitvadda - bi-tɢuul fiiha* 'What do you say to going home for lunch?' 'You bet!' - *ɢaal ɛala-* (1) to mention, refer to. *ma-ɢult[i]-ʃ ɛalee bil-ʔism* you didn't mention him by name. *ɢult[i] ɛal-ḥikaaya l-ʔabuu-ya* I mentioned the matter to my father. (2) to ask for in marriage. *naas kitiir ɢaalu ɛalayya bass[i] ʔana ma-rḍit-ʃ* I had a lot of

suitors but I refused them all. (3) to gossip (usually maliciously) about. *bi-yquulu ɛaleeha kalaam kitiir* they say a lot (of nasty things) about her. - *quul ...* say .... *ʔadfaɛ-lak dilwaqti quul ɛafara gneeh* I'll pay you now, say ten pounds. *kull[i] waaḥid minkum ḥa-ygiib quul talaata mitr* each one of you will bring, let's say, three metres. - *tiqul-f* (you might (almost) say) ≈ just as if, as in *bi-yqaffil beet-u b-xamas ʒifaal tiqul-f il-bank il-ʔahli* he locks up his house with five padlocks as if it were the National Bank, *bi-tiftim fii tiqul-f inta lli zooq* you are running him down as if you were polite yourself!

قولة *qoola* /inst n, pl *-aat*/ a saying, an utterance. *ma-tqul-f il-qoola di* don't you say that!

قالة *qaala* /n/ (unpleasant) rumour, what the word is.

قلّ *qill: qal(-lu) l-qill* response indicating one's annoyance at being told 'I told you so' ≈ to hell with what you said! *miʃ ʔana qult-i-lak kida - qal-lak il-qill* 'Didn't I tell you so?' - 'To hell with what you told me!'

أقوال *ʔaqwaal* /pl n/ court testimony.

مقال *maqaal↑* /n pl *-aat*/ essay, article.

مقالة *maqaala↑, maqaala↑ = maqaal.*

اتقال *ʔitqaal* /vi/ passive of *qaal. da kalaam ma-yitqal-ʃ* that's something that shouldn't be said. - iva *mitqaal.*

انقال *ʔinqaal = ʔitqaal.* - iva *minqaal.*

قوّل *qawwil* /vt/ to attribute (e.g., a statement) falsely to (s.o.). *ya bagaḥt-ak - ḥa-tqawwil-ni lli ɛumr-i ma-qult-u* what a nerve you've got! are you going to attribute to me things I never said? - vn *taqwiil*; ava *miqawwil.*

مقوّلاتى *miqawwilaati* /n pl *-yya*/ one who engages in the false attribution of words to others.

اتقوّل *ʔitqawwil* /vi/ **1** to have words falsely attributed to one, have words put in one's mouth. **2** to be falsely attributed (to s.o., of, e.g., a statement). - ava/iva *mitqawwil.*

¶ *ʔitqawwil ɛala↑* to gossip about, spread (damaging) reports about.

قاول *qaawil* **1** /vt/ to enter into a contract with (s.o.). *qawilt-u ɛal-buna* (1) I contracted the building-work out to him. (2) I contracted to do the building for him. **2** /vi/ to take on the role of contractor. *qaawil ɛal-buna liyya* he took on the building contract for me. - vn *miqawla*; ava *miqaawil.*

مقاولة *muqawla, miqawla* /n pl *-aat*/ contract, deal, transaction. *ʃirkit muqawlaat* contracting company. ‖*bil-miqawla* on a piece-work basis, by the job.

مقاول *miqaawil* /n */ contractor.

اتقاول *ʔitqaawil* /vi/ **1** to assign or be assigned a task on a contracted basis. **2** to enter jointly into a contract. - ava/iva *mitqaawil.*

² ق و ل

قول *qool* <T *kol*> /n pl *-aat*/ *[mil obsol]* convoy, column.

ق و ل ح

قولح *qoolaḥ* /coll n/ corn cob(s).

قولحة *qoláḥa, qolḥa* /unit n, pl *qawaaliḥ*/ a corn cob.

ق و ل و ن

قولون *qawloon↑* /n/ *[anat]* colon.

¹ ق و م see also ¹ ق ى م

قام *qaam[1] (u)* /vi/ **1a** to stand, get up, arise. *quum ɛala ḥeel-ak* stand up! *qaam min ɛala l-maktab* he got up from the desk. **1b** to recover from a state or condition. *qumt[i] min in-noom* I woke up. *lissa ma qamit-ʃ[i] min il-muṣiiba* she hasn't yet recovered from the disaster. *ʔin faaʔ allaah ḥa-tqūum ɛala xeer* God willing you'll recover. **2** to go into action. *ʔil-hawa qaam* the wind rose. *ʔil-mutoor ma-bi-yqum-ʃ* the motor won't start. **3** to depart. *ʔil-qaṭr[i] qaam min il-maḥaṭṭa* the train left the station. ‖*quum biina* let's get going. **4a** modal of launching an action. *quumu ʃtiku* go and complain! *qumt[i] ladaɛt-u qalam* I upped and slapped him. *quum ruuḥ* get going! **4b** modal of consequent action. *nisiit maḥfaẓt-i fil-beet qumt[i] rgiɛt* I forgot (and left) my wallet at home so I came back. *ma-fakkart-uu-ʃ qaam ma-gab-ʃ ik-kitaab* I forgot to remind him so he didn't bring the book. *qaddimt-i-lu l-kart[i] qaam baṣṣ[i] fii w-raggaɛ-u taani* I presented the card to him and he looked at it and gave it back. - vn *qoom, qawamaan, qiyaam*; ava *qaayim.*

¶ *qaam ɛala* (1) to rise up against. *ʔin-naas qaymiin ɛala l-ḥukuuma* people are revolting against the government. *ʔid-dunya qayma ɛalayya* everyone is up against me. (2) to set about (doing s.th.) to (s.o. or s.th.). *qaamit ɛal-ɛiyaal ḥammit-hum wi-labbisit-hum* she turned to the kids and bathed and dressed them. - *qaam bi-* to deal with, attend to, cope with. *ʔana ḥ-aquum bit-takaliif* I'll see to the expenses. *qaam bil-miɛza l-waḥd-u* he polished off the (whole) goat on his own.

قام *qaam[2] (i)* /vt/ **1a** to raise, lift up. *qaam ik-kubbaaya ɛala ʃafayf-u* he raised the cup to his lips. **1b** to set upright. *qiim il-ɛimdaan ɛal-ḥeeṭa* set the props up against the wall. **2a** to mount, set up. *qimt il-laḥma ɛan-naar* I put the meat on the fire. *qaam iʃ-ʃanṭa ɛala*

kitf-u he lifted the suitcase on his shoulder. **2b** to hold, set up. *ḥa-nqiim faraḥ kibiir* we're going to put on a big wedding celebration. **3** to perform (a ritual prayer). *qaam iṣ-ṣala ɛala rooḥ il-mawta* he said the prayer for the souls of the deceased. ‖ *ʔil-ʔimaam qaam iṣ-ṣala [Isl]* the imam uttered the formula signalling the worshippers to rise for the prayers. -vn *qiyaam*; ava *qaayim*.

قيام *qiyaam* /n/ *[text]* warp.

القيامة *ʔil-qiyaama* /n/ the Resurrection. *ɛiid il-qiyaama [Chr]* Easter. *yoom il-qiyaama [Isl]* the Day of Judgement. ‖ *(wi-)qaamit il-qiyaama* ≈ (and) all hell broke loose!

قومة *qooma* /inst n, pl *-aat*/ a standing up, a getting up. *qaam nuṣṣ[i] qooma* he half rose. *w-allaah-i mä-nta qaayim - ya salaam dil-qooma liik* 'You really mustn't trouble yourself to get up!' 'My goodness! If one gets up for anyone it should be for you!'

قايم *qaayim* **1** /ava/ ‖ *ʔil-balad qayma ɛala rigl* the town is hopping with excitement. *-qaayim naayim* always, constantly, as in *qaayim naayim yikallim nafs-u* he's always talking to himself. *-qaayim bi-zaat-u* autonomous, as in *ʔil-butagaaz luh xazzaan qaayim bi-zaat-u* the gas stove has a separate tank. *-wazn[i] qaayim* gross weight. *-keel qaayim* loosely-filled or loosely-packed measure. **2**↑ /n pl *qawaayim*/ any vertical support, prop, pillar.

قايمة، قائمة *qayma* /n pl *qawaayim*/ **1** any vertical support, prop, pillar, post. *qaymit ṭarabeeza* table leg. *qaymit baab* door post. **2** list. *qaymit il-mamnuɛiin* black-list. ‖ *qaymit il-ɛaff* list of items of furniture which a bridegroom is sometimes required by the bride's family to sign as guarantor of their value in case of loss, damage or divorce.

قامة *qaama* /n pl *-aat*/ **1** stature, build. **2** surveyor's levelling staff.

قوام *qawaam*↑ /n/ **1** consistency. *ʔiṭ-ṭiin wi-huwwa ɛagiina qawaam-u zayy il-ɛasal* the clay, while it is a soft mass, has the consistency of honey. **2** stature, build. — /adv/ **3** (also *qawaam-ak*) quickly, right away.

قيّوم *qayyuum* /n/ Everlasting One, Eternal One (epithet of God).

اتقام *ʔitqaam* /vi/ passive of *qaam*[2]. -iva *mitqaam*.

قوّم *qawwim* /vt/ **1a** to cause to stand, cause to rise. *qawwim il-ḥumaar* get the donkey on its feet! *qawwimna l-xeema* we put up the tent. *qawwim ʃaɛr-i* it made my hair stand on end. ‖ *qawwim nifs-i* it made my gorge rise, it made me feel sick. **1b** *[Chr]* to resurrect. **2** to set in motion, activate. *qawwim il-ɛarabiyya* he started up the car. *qawwimna xnaqaat kitiira* we picked a lot of quarrels. *qawwim fil-balad zeeṭa* he raised a rumpus in the town. ‖ *qawwimna muḥaami* we hired a lawyer. **3a** to cause to depart, cause to set off. *qawwim-ni badri min maṣr* he got me to leave Cairo early. **3b** to send off, dispatch. *ḥa-nqawwim-lak ɛarabiyya* we'll send a car for you. *qawwim-u bi-mutusikl* he sent it off by motor-cycle. *qawwim lagna* he sent off a committee. -vn *taqwiim*; ava/pva *miqawwim*. ¶ *qawwim ɛala* to incite against, set against. *qawwimit-hum ɛaleena* she set them up against us. *-qawwim bi-* to cause to attend to, cause to see to. *qawwimuu-ni bil-ʔakl* they got me to see to the food.

تقويم *taqwiim* /n pl *taqawiim*/ calendar. *ʔiz-ziraaɛa f-maṣr[i] qayma ɛat-taqwiim il-qibṭi* the agricultural cycle in Egypt follows the Coptic calendar.

اتقوّم *ʔitqawwim* /vi/ **1a** to be stood up, be erected, be raised. **1b** *[Chr]* to be resurrected. **2a** to be caused to depart. **2b** to be sent off, be dispatched. -iva *mitqawwim*.

¶ *ʔitqawwim ɛala* to be incited against, be set against.

قاوم *qaawim* /vt/ to resist, oppose. *qaawim it-taɛab* he resisted fatigue. *muqawmit-u (li-)l-ɛaya* his resistance to the disease. -vn *muqawma*; ava *miqaawim*.

مقاومة *muqawma* /n/ **1** *[phys]* resistance. **2** *[pol]* resistance movement.

أقام *ʔaqaam*↑ **1** /vt/ to erect, put up. *niqim-lu timsaal* we erect a statue to him. **2** /vi/ to stay, reside. ‖ *taḥdiid ʔiqaama [leg]* house arrest. *-(taʔʃiirit) il-ʔiqaama* residence visa. -vn *ʔiqaama*; ava *muqiim*.

استقام *ʔistaqaam[1] (yistiqiim)* /vi/ to become right or proper. *ɛaawiz ʔatgawwiz w-astaqiim* I want to get married and lead a decent life. ‖ *xaṭṭ[i] mustaqiim* a straight line. *- ḍarba mustaqiima ymiin* straight right (in boxing). -vn *ʔistiqaama*; ava *mustaqiim, mistiqiim*.

استقام *ʔistaqaam*[2], *ʔistiqaam*↓ *(yistaqaam)* **1** /vt/ to straighten out, unbend. *mumkin tistaqam-li l-ḥadiida di* could you straighten out this piece of iron for me? **2** /vi/ to become unbent. *ʔil-maɛwuug yistaqaam ɛas-sindaal [prov]* (the crooked (object) straightens up on the anvil) ≈ those who don't mend their crooked ways voluntarily will be set straight by force. -ava/pva *mistaqaam*.

مستقيم *mustaqiim* /adj */ correct, proper. *raagil mustaqiim* an upright man. *ʔiṣ-ṣiraaṭ il-mustaqiim* ≈ the straight and narrow.

ق و م [2]

قوم *ɢoom: min ɛaaʃir il-ɢoom ʔarbiɛiin yoom ṣaar minhum [prov]* (1) the people among whom one lives

are considered one's kinsfolk. (2) if you live amongst people (even for as little as) forty days you find that you acquire their habits.
قومى *qawmi↑* /adj */ national. *ʕil-ʕamn il-qawmi* national security.
قوميّة *qawmiyya* /n/ **1** nationalism. **2** /pl *-aat*/ ethnic group.

ق و ن
قون *ɢuuna* /n pl *-aat*/ *[Chr]* icon. - also *ʕiɢuuna*.

ق و ن ص see ² ق ن ص

ق و و ق
قاووق *ɢawuuɢ* <T *kavuk*>: *hazz-i-l(u) ɢawuuɢ* (to shake one's cap for s.o.) to be obsequious to (s.o.).

ق و و ن
قاوون *ɢawuun* <T *kavun*> /coll n/ variety of musk-melon.
قاوونة *ɢawwuuna* /unit n, pl *-aat*/ a musk-melon.

¹ ق و ى
قوى *ɢiwi (a)* /vi/ to find strength, become strong. *huwwa ma-yiɢwaa-ʃ ɛala feel il-ħiml[i] da* he isn't strong enough to carry this load. - vn *ɢiwwa, ɢuwwa*; ava *ɢawyaan*.
قوّة *ɢuwwa* or *ɢiwwa* /n/ power, strength. *ɢuwwit iʃ-ʃaɛb[i] tibɢa ɢuwwit ig-geeʃ* the strength of the people is the strength of the army. *ɢiwwit il-mutoor* the power of the motor. *bi-ɢuwwa* strongly, firmly, powerfully. ‖*bil-ɢiwwa* with considerable effort, as in *bi-yitnaffis bil-ɢiwwa* he can hardly breathe. - *ya ɢiwwit illaah* exclamation of wonderment at the immensity, magnitude or might of something ≈ such is the power of God!
قوى *ɢuwa:* *ʕalɛaab il-ɢuwa* track and field sports. *ʕil-ɢuwa l-ɛamla* (1) labour force. (2) (also *ʕidaarit il-ɢuwa l-ɛamla*) government employment agency.
قوّات *ɢuwwaat:* *ɢuwwaat il-geeʃ* the army forces. *ʕil-ɢuwwaat il-musallaħa* the armed forces.
قوى *ɢawi* **1** /adj * and pl *ɢuwaay, ʕaɢwiya*/ strong, powerful. *raagil ɢawi* a strong man. *riiħa ɢawiyya* powerful smell. *garra ɢawiyya* strong pull. ‖*ʕarḍ[i] ɢawiyya* rich fertile land. - *miʃ ɢawi* not much to speak of, not so good, as in *ʕil-maktab ħilw[i] bass iʃ-ʃuɤl[i] miʃ ɢawi* the office is pleasant but the work is only so-so. **2** /adv/ to a great degree or extent. *ħilw[i] ɢawi* very pretty. *mumkin ɢawi* quite possible. *kifaaya ɢawi* quite enough. *ɛagib-ni ɢawi* it pleases me very much. **3** (also *qawi*) /n/ Almighty One, Omnipotent One (epithet of God).
أقوى *ʕaɢwa, ʕaqwa* /el/ stronger/ strongest.
قوّى *ɢawwa* /vt/ to strengthen, fortify. *ʕil-gumbaaz bi-yɢawwi l-ɛaḍalaat bitaaɛit il-gism* gymnastics strengthen the body's muscles. *rabb-i-na yɢawwii-k* may God give you strength (to s.o. up against a difficult task). - vn *taɢwiyya*; ava/pva *miɢawwi*.
مقوّى *miɢawwi* or *muɢawwi, muqawwi* /n pl *-yaat*/ **1** strengthener, fortifier. **2** *miɢawwiyaat, muqawwiyaat* /pl n/ vitalizing medicines, tonics.
اتقوّى *ʕitɢawwa* /vi/ to be strengthened, be fortified. - iva *mitɢawwi*.
استقوى *ʕistaɢwa* /vt/ to consider strong. ‖*bi-yistaɢwa nafs-u* (he thinks himself strong) ≈ he throws his weight around. - ava *mistaɢwi*.

² ق و ى see ² ت ق ى : *taɢaawi*

ق ى ا س
قياس *ɢiyaas!* /n pl *ʕiɢyisa, ɢiyʕisa, ɢiyasaat*/ large reed mat.

ق ى ء
قيء *qeeʕ↑* /n/ vomiting.
مقيّئ *muqayyiʕ* **1** /adj/ emetic, vomitive. *ʕadwiya muqayyiʕa* emetic medicines. **2** /n pl *-aat*/ emetic, vomitive.
اتقايا *ʕitɢaaya* /vt/ to vomit. - vn *miɢayaah*; ava *mitɢaaya, mitɢaayi*.
استقايا *ʕistiɢaaya↓* /vt/ to vomit. *ʕistiɢaaya kull illi kal-u* he vomited everything he'd eaten. - ava *mistiɢaaya, mistiɢaayi*.

ق ى ت see ق ت ى : *maɢaata*

ق ى ح
قيح *ɢeeħ* /n/ pus. ‖*ʕumm il-ɢeeħ* core of a boil.
قيّح *ɢayyaħ* **1** /vt/ to cause to suppurate, cause to fester. *ʕiltihaab ig-garḥ[i] ɢayyaħ-u* the inflammation of the wound made it fester. **2** /vi/ to suppurate, fester. *ʕil-garḥ[i] b-yifḍal yiɢayyaħ* the wound continues to fester. - vn *taɢyiiħ*; ava *miɢayyaħ*.
اتقيّح *ʕitɢayyaħ* /vi/ to suppurate, fester, be caused to suppurate, be caused to fester. - ava/iva *mitɢayyaħ*.

¹ ق ى د
قيد *ɢeed* /n/ **1** /pl *ɢuyuud*/ **1a** bond, fetter, hobble. ‖*ɢeed il-miħraat* rope by which the yoke of the plough is

attached to the beam. **1b** restriction, reservation. **2** /pl *ɋuyudaat*/ **2a** entry, registering, booking. *raḫḫal il-ɋuyudaat lid-daftar ir-rasmi* transfer the entries to the official ledger. *kaatib ɋuyudaat* registrar. **2b** enrolment. *ʈalab il-ɋeed* application for enrolment.

قيّد *ɋayyid* /vt/ **1a** to bind, tie up, hobble. ‖*ɋayyid ya rfaaɛi [obsol]* render (it) harmless, Saint Rifa'i (on seeing a snake). **1b** to restrict, limit. *ma-tɋayyid-ʃⁱ ḫurriyyit-i* don't limit my freedom! **2a** to register, note down. *bi-nɋayyid il-mabiɛaat il-yomiyya fid-daftar* we enter the daily sales in the ledger. **2b** to enroll. - vn *taɋyiid*; ava/pva *miɋayyid*.

اتقيّد *ʃitɋayyid* /vi/ passive of *ɋayyid*. - iva *mitɋayyid*.

² ق ى د see also و ق د

قاد *ɋaad (i)* **1** /vt/ to light, kindle. *ɋaad il-lamba* he lit the lamp. ‖*ɋaadit in-naar fi-ɋalb-i* she set my heart aflame. **2** /vi/ to catch fire, burn. *ʃin-naar ɋayda* the fire is lit. ‖ *ʃil-beet ɋaayid naar* the house is in a turmoil. - vn *ɋiyaada, ɋayadaan*; ava *ɋaayid*.

اتقاد *ʃitɋaad* /vi/ passive of *ɋaad*. - iva *mitɋaad*.

انقاد *ʃinɋaad* = *ʃitɋaad*. - iva *minɋaad*.

³ ق ى د see ق و د : *ɋiyaada*

ق ى د و م see ² ق د م : *ɋayduuma*

¹ ق ى س

قاس *ɋaas (i)* /vt/ **1** to measure, take the measurement of. *ɋaas il-masaafa* he measured the distance. ‖*waaxid is-sikka ɋiyaas* he travels back and forth along the road. **2** to try on for size. *ɋiisi l-fustaan ɋablⁱ ma tiftirii* try on the dress before you buy it. **3** to probe (a hen) for an egg. - vn *ɋiyaas, ɋayasaan*; ava *ɋaayis*.

قياس *ɋiyaas²* /n pl *-aat*/ measure, measurement.

قياسة *ɋiyaasa* /inst n, pl *-aat*/ a measuring. *seef* (or *dibal) ɋiyaasa* ring gauge.

قيّاس *ɋayyaas* /n * and pl *ɋayyaasa*/ **1** one who measures. **2** (land) surveyor.

قيّاسة *ɋayyaasa* /n/ type of large sailing boat with a high prow.

مقاس *maɋaas* /n pl *-aat*/ **1** size, dimension. *maɋaas gazma* shoe-size. **2** measuring instrument (e.g., measuring tape, dip-stick).

مقياس *miɋyaas* /n pl *maɋayiis*/ **1** measuring instrument, gauge. *miɋyaas in-niil* the Nilometer. **2**↑ (also *miqyaas*, pl *maqayiis*) standard. *bi-ʃayyⁱ miqyaas* by any standard.

اتقاس *ʃitɋaas* /vi/ to be measured. - iva *mitɋaas*.

انقاس *ʃinɋaas* = *mitɋaas*. - iva *minɋaas*.

مقايسة *muɋaysa* /n pl *-aat*/ **1** specification (of dimensions, materials etc. required of a job). **2** preliminary cost estimate.

² ق ى س see ق ى ا س : *ɋiyaas¹*

ق ى ش

قايش *ɋaayiʃ* <T *kayış*> /n pl *ɋawaayiʃ*/ **1** leather strap (especially one used as a razor-strop). **2** thick leather belt (especially the type worn by soldiers).

قيّش *ɋayyiʃ* **1** /vt/ to beat with a leather strap. **2** /vi/ to dress in one's best, be dressed in one's best. - vn *taɋyiiʃ*; ava/pva *miɋayyiʃ*.

اتقيّش *ʃitɋayyiʃ* /vi/ **1** to be beaten with a leather strap. **2** to dress or be dressed in one's best. - ava/iva *mitɋayyiʃ*.

ق ى ص ر

قيصرى *ɋayṣari: (ɛamaliyya) ɋayṣariyya [surg]* Caesarean section.

ق ى ض

قايض *ɋaayiḍ* /vt/ to barter with (s.o.), trade with (s.o.) by exchange of commodities. *ɋayiḍ-ni ɛala ɋamiiṣ bi-ḫittit ɋumaaʃ* he traded me a piece of cloth for a shirt. - vn *ɋiyaaḍ, muɋayḍa*; ava *miɋaayiḍ*.

مقايضة *muɋayḍa* /n pl *-aat*/ barter deal.

اتقايض *ʃitɋaayiḍ* /vi/ **1** to barter, trade by the exchanging of commodities. **2** (impersonal) passive of *ɋaayiḍ*. *ʃil-ḫagaat di ma-yitɋayiḍ-ʃⁱ ɛaleeha* these things are not to be bartered. - ava/iva *mitɋaayiḍ*.

ق ى ف

قيافة *ɋiyaafa* /n/ style, elegance, chic. *kaan laabis ʃaaxir ɋiyaafa* he was very stylishly dressed. ‖ *ʃil-bintⁱ di ɋiyaafa* that girl is a regular fashion-plate.

اتقيّف *ʃitɋayyif* /vi/ to dress stylishly and with chic. - ava *mitɋayyif*.

¹ ق ى ل

استقال *ʃistaɋaal, ʃistaɋaal* /vi/ to resign. - vn *ʃistiɋaala*; ava *mistaɋiil, mustaɋiil*.

استقالة *ʃistiɋaala* /n pl *-aat*/ (letter of) resignation.

² ق ى ل

قيّالة *ɋayyaala* /n/ midday heat, hottest part of the day.

قيّل *ɋayyil* /vi/ **1** to be burning, be scorching (of midday heat). *ʃil-ɋayyaala ɋayyilit ɛaleena* the midday heat

blazed around us. **2** to rest in the hottest part of the day. *kaanu mqayyiliin taḥt[i] ʃagara* they were taking a siesta under a tree. - vn *taqyiil*; ava *miqayyil*.
تقييلة *taqyiila* /n pl *-aat*/ midday rest, rest in the hottest part of the day. *xud-lak taqyiila* take a siesta.

ق ى ل ط see [3] ق ل ط : *qeelaṭ*

[1] ق ى م see also [1] ق و م
قيمة *qiima* /n pl *qiyam*/ **1** value, worth. *qimt-u qaliila* it's of little value. *ʃiftaxalt[i] b-qiimit il-xaraama* I did work to the value of the fine. ‖ *bint[a] ɛaleeha l-qiima* a respectable-looking girl. **2a** approximate duration. *baɛd[i] qiimit sana* after about a year's time. *min qiimit mudda* (1) some time ago. (2) for some time past. **2b** approximate measure. *qiimit nuṣṣ[i] santi* about half a centimetre. *gaab qiimit kiilu sudaani* he brought about a kilo of peanuts.
قيّم *qayyim* /adj */ *[deris]* precious (of a person).
مقام *maqaam* /n pl *-aat*/ **1** worth, status. *kibiir il-maqaam* of high standing. *ɛayza raagil yiɛraf maqaam-i* I want a man who appreciates (the worth of) me. ‖ *ʃin-naas maqamaat* ≈ not everyone has the same worth. - *huwwa-ḫna miʃ qadd il-maqaam* so (you imagine) we're not up to standard? - *bi-yiɛmil maqaam li-mraat-u* he treats his wife with respect. - *ʃism-alla ɛala maqaam-ak [women in trad soc]* ≈ begging your pardon, no offence intended (often prefaces a contradiction, objection or mention of any mundane or lowly object; cf *muʃaxza*). **2** tomb of a saint, site of a saint's tomb wherein his presence is thought to be felt. **3** *[mus]* mode, scale, melody type (in Arabic music).
قيّم *qayyim*[1↑] /vt/ to estimate, value, appraise. - vn *taqyiim*; ava *muqayyim*.
اتقيّم *ʃitqayyim* /vi/ to be estimated, be valued, be appraised. *ʃil-xaatim da mitqayyim bi-kaam* how much is this ring valued at? - iva *mitqayyim*.

[2] ق ى م see [1] ق و م : *qaam, qiyaam, ʃil-qiyaama, qaayim, qayma, qayyuum*

ق ى ى see ء ى ى : *ʃitqaaya*

ق ى ى م
قيّم *qayyim*[2] <Syr> /n */ sacristan (in the Coptic Church).

ك

ك
ك *ka-*↑ prefixed preposition indicating role, capacity or status. *bi-yiḥtifiẓ bii ka-ʕarfüf bi-yirgaʕ ʕilee fi-ʕayy*^{i} *waqt* he keeps it as a record to which he can refer at any time. *tanẓiim il-maktab ka-kull* the organization of the office as a whole.
¶ *ka-ma* (1↑) /conj/ as, just as. *kaan ʕiryaan ka-ma wildit-u ʕumm-u* ≈ he was as naked as the day he was born. (2↓) /prep/ like. *mifi ka-ma l-kalb* ≈ he left with his tail between his legs. — *ka-misl*↓ /prep/ like. *bint*^{i} *ka-misl il-qiʃta* ≈ a girl like peaches and cream. - /adverbially, by ellipsis/ *ʃiʏsil il-ʕarabiyya bil-gaaz wil-luuri ka-misl* wash the car with kerosene, and the lorry similarly. — *ka-ʃinn* /conj/ as if, as though. *bi-yitṣarraf ka-ʃinnu mudiir* he acts as if he were boss. *ʃikkarraʕ ka-ʃinnu waakil xaruuf* he belched as if he had eaten a sheep.

(ك ا ب)
كاب *kaab*^{1} <Fr> /n pl *-aat*/ cape.
كاب *kaab*^{2} <Engl> /n pl *-aat*/ (military) peaked cap.

ك ا د ر see ² ك د ر : *kaadir*

(ك ا ر)
كار *kaar* <P *kâr*> /n pl *-aat*/ occupation, trade. *ʃiḫna wilaad kaar waaḥid zayy*^{i} *baʕḍ* we're all in the same trade together. *ʃirib ik-kaar min ṣuʏr-u* ≈ he imbibed the trade with his mother's milk. ‖ *da-bn*^{i} *kaar* (1) he's made for the job. (2) he's crafty.
كارة *kaara* /n pl *-aat*/ *[coarse slang]* arse.

ك ا ز ى
كازى *kaazi* <It *cazzo*> /n/ *[coarse slang]* penis, cock.

ك ا س
كاس *kaas* /n pl *-aat, kuʃuus*/ 1 wine-glass or any other stemmed glass. *kaas hawa* cupping glass. - *ʃil-moot kaas daayir ʕan-naas [prov]* ≈ death comes to all. - *ʕenee-ha zayy*^{i} *kasaet id-damm* her eyes are very bloodshot. - *ya kaas-i* (women's mourning cry) ≈ oh woe is me! 2 glass of alcohol. *taʕaala nifrab kaas* let's go and have a drink. ‖ *ʃibn*^{i} *kaas* bibber, boozer. 3 (also *kaʃs*) *[Chr]* chalice. 4 beaker (in a laboratory). — /pl *-aat*, only/ 5 *[mus]* wood block.
كاسة *kaasa* /n pl *-aat*/ 1 glass (for ice cream). 2 *[callig]* tail, flourish (e.g., of the letter *siin*).

(ك ا ش)
كاش *kaaf*^{1} <Engl> /adv/ 1 with a single payment (as opposed to by instalments). *ʃiftiri kaaf - ʃarxaṣ* buy outright, it's cheaper. 2 in cash (as opposed to by cheque). *balaaf fikaat ʃana ʕaayiz kaaf* no cheques! I want (payment in) cash!
كاش *kaaf*^{2} <Fr *cache*> /n pl *-aat*/ *[phot]* masking frame.

ك اف
كاف *kaaf* /fem n, pl *-aat*/ 1 twenty-second letter of the Arabic alphabet. 2 *[chem]* abbreviation for carbon *(karboon)*.

¹ ك ا ك
كاك *kaak* onomatopoeia for the call of the crow. *zayy*^{i} *gamʕiyyit il-ʏirbaan ʃawwil-ha kaak wi-ʃaxir-ha kaak [prov]* like a group of crows, saying 'caw!' from first to last (said of those who indulge in fruitless talk).

² ك ا ك see ك ك ى: *kaaka, kaaka², kaaka³*

ك ا ك ا

كاكا *kaaka¹* (also *kakkaa*) <prob T *kaka* /n/ *[children]* excrement, cack. ‖*kida kakkaa - ma-tiɣmil-fⁱ kida* naughty, naughty - don't do that!

(ك ا ك ى)

كاكى *kaaki¹* <Engl> **1** /n/ **1a** khaki cloth. **1b** army uniform made of khaki cloth. **2** /adj invar/ dust-coloured, khaki-coloured.

كاكى *kaaki²* <perh It *cachi*> /coll n/ persimmon(s).

¹ ك ا م

كامة *kaama* <It *camma*> /n pl *-aat*/ *[mech]* cam.

² ك ا م see ك م: *kaam*

ك ا ن

كانة *kaana* <perh It *canna*> /n pl *-aat*/ *[constr]* **1** square metal spacer or frame to which longitudinal reinforcement rods are fastened within a concrete beam. **2** metal support sunk into a wall to support a wooden cornice, door- or window-frame.

ك ا ن ى

كانى *kaani: kaani w-maani* <Copt> one thing or another, as in *gineeh waaḥid madfuuɣ li-kaani w-maani* one pound which was paid for something or other. *ḥa-tqul-li kaani w-maani* are you giving me a lot of excuses?

ك ء ب

كآبة *kaʔaaba* /n/ melancholy, depression, gloom.

كئيب *kaʔiib* /adj */ melancholy, depressed, gloomy. *loon kaʔiib* a cheerless colour.

اكتأب *ʔiktaʔab* /vi/ to become depressed. *ɣandu ʔiktiʔaab wi-ma-daxal-ʃ il-imtiḥaan* he's in a state of depression and didn't take the exam. - vn *ʔiktiʔaab*; ava *miktiʔib, muktaʔibʔ*.

ك ء س see ك ا س: *kaʔs*

ك ء ن ن see ك: *ka-ʔinn*

¹ ك ب ب

كبّ *kabb¹ (u)* /vt/ **1** to pour, pour out. *kubbi mayyit il-ɤasiil fil-ḥooḍ* pour the washing water into the sink. *ʔiz-zabbaal kabb iṣ-ṣafiiḥa fil-ɋuffa* the garbage man emptied the rubbish bin into the basket. **2** to spill, upset. **3** *[joc]* to throw to the ground. *ʔil-ḥuṣaan kabb-u* the horse threw him. — **4** /vi/ *[coarse slang]* to ejaculate, come. - vn *kabb, kababaan*; ava *kaabib*; pva *makbuub*.

كبّة *kabba¹* /n pl *-aat*/ **1** instance noun of *kabb*. **2** *[mech]* standard feeding load.

مكبّة *mikabba¹* /n pl *-aat*/ protective cover (for food).

اتكبّ *ʔitkabb* or *ʔikkabb* /vi/ **1** to be poured, be poured out. **2** to be spilled, be upset. **3** to become engrossed or absorbed. *mitkabb⁸ ɣala ktaab-u* poring over his book. - ava/iva *mitkabb*.

انكبّ *ʔinkabb* = *ʔitkabb*. - ava/iva *minkabb*.

² ك ب ب

كبّة *kubba¹* /n pl *kubab, kubbaat*/ **1** lump. *ɣamalt il-ɣagiin kubba* I made the dough into a lump. **2** plague boil, bubo. ‖*gat-ak kubba* may plague befall you! (exclamation which may be accompanied by the holding up of a spread palm in front of someone's face). **3** clumsy person.

كباب *kabaab* /n/ shish kebab, pieces of meat, fish, or fowl skewered and grilled. ‖*kabaab ṣiini* cubeb.

كبابة *kabaaba: kabaaba ṣiini* cubeb.

كبابجى *kababgi* /n pl *-yya*/ one engaged in the preparation, serving and selling of kebab.

كبيبة *kubeeba* /n/ dish composed of hollow balls of cracked wheat dough stuffed with minced lamb and spices.

كبابيّة *kubabiyya, kubbabiyya* /n pl *-aat*/ ball (of string, wool etc.).

كبّب *kabbib* **1** /vt/ to make into a lump. *kabbibit il-mandiil wi-ḥaṭṭit-u f-geb-ha* she wadded the handkerchief into a ball and put it in her pocket. **2** to pile up, throw in a pile. *ʔinta bassⁱ tkabbib-li l-ɤasiil fir-rukn* just pile the laundry in the corner for me. — /vi/ **3** to thrust one's open palm in someone's face (a gesture of imprecation, cf. *kubba¹* 2). *raaḥu mkabbibin-lu f-wiff-u* they thrust their palms at his face, as if to say 'May plague befall you!'. - vn *takbiib*; ava/pva *mikabbib*.

تكبيبة *takbiiba* **1** /unit n, pl *-aat, takabiib*/ a lump. **2** /inst n, pl *-aat*/ gesture of holding up the palm, claw-like, before someone's face.

مكبّب *mikabbib* /adj */ round, rounded, spherical. *naḥla mkabbiba* a spherical spinning top. *sidr-a-ha mkabbib* her bosom is full and firm. *geeb-u mkabbib* his pocket is bulging.

اتكبّب *ʔitkabbib* or *ʔikkabbib* /vi/ **1** passive of *kabbib*. **2** to pile up. *naas mikkabbiba ɣal-maḥall* people crowding round (the door of) the shop. - ava/iva *mitkabbib*.

[3] ك ب ب
كبّ *kabb² (u)* /vi/ to use a cupping bowl (as a medical treatment). *ħ-akubb[a] ɛala ḍahr-i* I'll have my back cupped. - vn *kibaaba*; ava *kaabib*.
كبّاية *kubbaaya* /n pl *-aat/* **1** drinking glass, tumbler. *kubbaayit mayya* a glass of water. ‖ *ʕibn[i] kubbaaya* bibber, boozer. - *ḍarbit kubbaaya* blow with the side of the fist (in boxing). - *naḍḍaraat ɕaɛr[i] kubbaaya [joc]* thick eyeglasses. **2** tub, small carton. *kubbaayit jilaati* a tub of ice cream. **3** socket, sunken recess. *kubbaayit ṣaari* step of a mast.
مكبّة *mikabba²* /n pl *-aat/* cupping bowl.
مكبّاتي *mikabbaati* /n pl *-yya/ [obsol]* practitioner of a treatment (usually for rheumatism) involving the use of suction bowls.

[4] (ك ب ب)
كبّة *kabba²* /n/ **1** five-stones, jacks. - also *gabba*. **2** gambling game with cards.
كبّة *kubba²* <It *coppe*> /n/ (suit of) hearts (in cards).

ك ب ب ا د
كبّاد *kabbaad* /coll n/ sour orange(s), Seville orange(s).

ك ب ب ج ى see [2] ك ب ب : *kababgi*

ك ب ب ن ى
كبّنيّة *kubbaniyya* <It *compagnia*> /n pl *-aat/* **1** gang, group. **2** *[obsol]* (water or electricity) utility.

ك ب ب و د
كبّود *kabbuud* (also *kabbuut*) <Fr *capote*> /n pl *kababiid/* **1** *[auto]* **1a** hood or bonnet (of the engine). **1b** convertible top. **2a** hood of a coat. **2b** car cover. **3** /usually *kabbuut/* condom.

[1] ك ب ت
كبت *kabat (i)* /vt/ to suppress, repress. *kabt il-ħurriyya* the suppression of freedom. *nifs-u yṭallaɛ ṭaqt-u l-makbuuta* he wants to find an outlet for his suppressed energy. - vn *kabataan, kabt*; ava *kaabit*; pva *makbuut*.
كبت *kabt* /n/ repression. *ʕik-kabt ig-ginsi* sexual frustration.
كبتة *kabta* /pl *-aat/* instance noun of *kabt*.
اتكبت *ʕitkabat* or *ʕikkabat* /vi/ to be suppressed, be repressed. - iva *mitkibit*.
انكبت *ʕinkabat* = *ʕitkabat*. - iva *minkibit*.

[2] ك ب ت see ك ب ب و د : *kabbuut*

ك ب ت ن
كابتن *kabtin* <Engl> /n pl *kabaatin/* **1** captain (of a ship or aircraft). *ʕil-kabtin bitaaɛ il-markib* the ship's captain. **2a** sports coach. **2b** captain (of a games team). **2c** polite form of address to an athlete. **2d** form of address or reference to a young man (sometimes used ironically).
اتكبتن *ʕitkabtin* or *ʕikkabtin* /vi/ to be bossy. *ħa-titkabtin ɛaleena* are you going to throw your weight around with us? - vn *kabtana*; ava *mitkabtin*.

ك ب ت ن –
كابيتونيه *kabituneeh* <Fr *capitonné*> /n/ quilt-stitching. *ɕumaaʃ kabituneeh* quilted material.

[1] ك ب د
كبد *kabad (i)* /vt/ to cause distress to. - vn *kabd*; ava *kaabid*; pva *makbuud*.
كبد *kibd* /n/ liver. *zeet kibd il-ħuut* cod-liver oil. ‖ *ɛandu k-kibd* he has liver trouble. - *ya kibd-i ɛalee(k) [women in trad soc]* ≈ (you) poor little thing! (expression of concern). - *ʕibn-ak ħitta min kibd-ak* ≈ your son is your own flesh and blood (so treat him accordingly).
كبدة *kibda* /n pl *kibad/* liver (as food). ‖ *zayy il-kibda* very red.
اتكبد *ʕitkabad* or *ʕikkabad* /vi/ to be caused distress. - iva *mitkibid*.
انكبد *ʕinkabad* = *ʕitkabad*. - iva *minkibid*.
كبّد *kabbid, kabbad↑* /vt/ to inflict (losses, damage) on. - vn *takbiid*; ava *mikabbid*; pva *mukabbad↑*.
اتكبّد *ʕitkabbid* or *ʕikkabbid* /vi/ passive of *kabbid*. - iva *mitkabbid*.

[2] ك ب د see ك ب ب ا د : *kabbaad*

[3] ك ب د see ك ب ب و د : *kabbuud*

ك ب ر
كبر *kibir, kubur (a)* /vi/ **1** to increase in size, increase in dimension. *ʕil-waram kibir* the swelling has increased. *kul ɛaʃaan tikbar* eat so you'll grow! *ʕin-naas iddaxxalit wil-xinaaqa kibrit* people interfered and the dispute grew. **2a** to increase in age. *ʕana kbirt[i] xalaaṣ wi-ma-baqit-ʃ[i] ʕaqdar ʕaʃtaxal ṭuul in-nahaar* I'm past it now and can no longer work the whole day. *kull[i] ma yikbaru ylaaqu d-dinya ɕasya* the older they get the more they find that the world is cruel. **2b** to reach maturity. *ʕil-bint iṣ-ṣuxayyara lamma tikbar tiɛɕal* when a little girl grows up she becomes sensible. *lamma*

l-quṭn[i] yikbar yiṭallaʕ nawwaar when the cotton reaches maturity it puts out blossom. - vn *kubr, kabar, kibar*; ava *kabraan*.

كبر *kubr* /n/ **1** largeness, immensity. *fuuf kubr-u* see how big it is! ‖ *kubr il-gurn[i] wala famaatit il-ʔaʕaadi [prov]* ≈ putting up a show is better than being the object of gloating. **2** advancement (in age).

كبر *kabar, kibar* /n/ advanced point in age. *raaḥ il-madrasa ʕala kabar* he went to school late in life.

كبرة *kabra* /n/ advanced point in age. *baʕd ik-kabra gibba ḥamra [prov]* (a red *gibba* in very old age) extreme senility brings second childhood.

كبير *kibiir, kabiirˆ* /adj pl *kubaar, kibaarˆ*/ **1** big, large. *ʕilbiteen kubaar* two big boxes. *mudda kbiira* a considerable period. *ʕamal ɣalaṭ kibiir* he made a big mistake. *ʕadad kibiir min banaat il-ʔayyaam di* a great number of today's girls. ‖ *ʕalb-u kbiir* he's big-hearted. - *muxx-u kbiir* (1) he's clever. (2) he's broad-minded. **2a** advanced or senior in age. *ʔaxuu l-kibiir* his elder/eldest brother. *ʔis-sitt ik-kibiira* designation for the eldest female member of a household (usually the grandmother). **2b** adult, full-grown. *ʔil-kubaar laazim yiquumu badri yṣallu* the adults should get up early to pray. *yiʕmiluu-ha ṣ-ṣuɣaar wi-yuqaʕu fiiha l-kubaar [prov]* the young start them (i.e. fights among themselves) but the adults (i.e. the parents) get dragged into them. **3** senior, superior (in rank). *kibaar iẓ-ẓubbaaṭ* senior officers. ‖ *kibiir il-beet* head of the household. - *kabiir il-muhandisiin [naut]* chief engineer. **4** outstanding, eminent. *kuttaab kubaar* great writers. *ʔik-koora ma-lha-ʃ kibiir* nobody is invincible in soccer. ‖ *kabiir ʔumaraaʔ l-biḥaar [obsol]* Admiral of the Fleet. — /n/ **5** *[rur]* large horizontal cog of a water-wheel (see Pl.E, 7).

كبيرة *kibiira* /n pl *kabaayir*/ major sin. *marist iz-zina - kibiira min il-kabaayir* I committed adultery - one of the greatest sins.

أكبر ʔ*akbar* /el/ **1** larger/largest. **2** older/oldest, etc. *huwwa ʔakbar minni b-sana* he's a year older than I. **3** greater/greatest. ‖ *ʔallaahu ʔakbar* God is most great.

أكابر ʔ*akaabir* /pl n/ people of high standing, people of distinction. *bint il-ʔakaabir ɣalya wa-law tikuun garya [prov]* (the daughter of the great has quality even if she is a serving-girl) true worth can never be lost.

كبرى *kubraˈˆ* /fem el/ **1** greater. *ʔil-qaahira l-kubra* Greater Cairo. **2** major. *ʔid-duwal il-kubra* the major powers.

كبرياء *kibriyaaʔ* /n/ pride, haughtiness. ‖ *ʔil-kibriyaaʔ li-llaah* ≈ what have you to be conceited about?

كبّارة *kubbaara* /adj invar/ **1** socially distinguished. *raagil kubbaara* a man of standing. **2** old.

كبّر *kabbar* /vt/ **1a** to enlarge, expand. *ʕayziin nikabbar ṣuwar il-faraḥ* we want to enlarge the wedding pictures. *ʔil-ʕadasa bi-tkabbar iṣ-ṣuwar* the lens magnifies the images. *naḍḍaara mkabbara* binoculars. *ʔimʃi min hina w-ma-tkabbar-ʃ il-ḥikaaya* get out of here and don't make things worse! ‖ *kabbar ʕaql-ak* be reasonable! **1b** to enhance, raise (the level of). *ʔil-hurn[i] ykabbar iṣ-ṣoot* the bell (of the trumpet) amplifies the sound. ‖ *qaaʕid min iṣ-ṣubḥ[i] ykabbar maqam-ha* (or *min maqam-ha*) he's been praising her all day. **1c** to cause to grow or increase in size. *bi-ykabbaru fraax ʕafaan yibiʕuu-hum* they fatten up chickens to sell. **2** to cause to mature, bring up. *rabbeet ʔawlaad-i w-kabbart-u-hum wi-daxxalt-u-hum il-gamʕa* I raised my children and sent them to the university. **3** to give the appearance of age. *ʔil-fustaan da bi-ykabbar-ha* that dress makes her look older. *bi-tiʃrab sagaayir ʕafaan tikabbar nafs-a-ha* (or *fi-nafs-a-ha*) she smokes cigarettes to seem older. **4** to seek a large(r) size of. *kabbari k-kubbayaat illi ʕaṭ-ṭarabeeza* put bigger glasses out on the table. — /vi/ **5** to utter the formula *ʔallaahu ʔakbar*. - vn *takbiir*; ava/pva *mikabbar*.

تكبيرة *takbiira, takbiira* /inst n, pl *-aat, -aat*/ (single) utterance of *ʔallaahu ʔakbar*.

مكبّر *mukabbirˆ* /n pl *-aat*/ **1** loudspeaker, amplifier. **2** *[phot]* enlarger.

مكبّرة *mukabbira* /n pl *-aat*/ magnifying glass.

اتكبّر *ʔitkabbar* or *ʔikkabbar* /vi/ **1** passive of *kabbar*. **2** to be disdainful or haughty. *yitkabbaru leeh ʕalee* why should they look down on him? - iva *mitkabbar, mutakabbir*.

متكبّر *mutakabbir, mitkabbar* /adj */ conceited, stuck up.

كابر *kaabir* /vi/ to argue back (out of unwillingness to listen to the other's point of view). *ʔismaʕ kalaam-i balaaʃ mikabra* listen to what I say, don't be so opinionated. - vn *mikabra, mukabra*; ava *mikaabir*.

استكبر *ʔistakbar* /vt/ **1** to consider (excessively) large or old. **2** to select for size or age. — /vt and vi/ **3** to give (oneself) airs, feel superior. *bi-yistakbar ʕaleehum* he looks down on them. *mistakbara nafs-a-ha ʕaʃ-fuxlaa-di* she thinks that job is beneath her dignity. - vn *ʔistikbaar*; ava *mistakbar*.

ك ب ر ا

كوبرا *kubra*[2] (also *tiʕbaan kubra*) /n/ cobra.

ك ب ر ت ١

كبرت *kabrit* /vt/ to sulphurate. - vn *kabrata*; ava/iva *mikabrit*.

كبريت *kabriit* /n/ **1** sulphur. *kabriit in-naḥaas* copper sulphate. ‖*kabriit il-ʒamuud* raw sulphur. **2** /coll/ matches. *kabriit miſṭ* book matches.
كبريتة *kabriita* /inst n, pl *-aat, kabariit*/ a match. *ʒandak kabriita* got a light?
كبريتات *kabritaat* /n/ sulphate.
كبريتيد *kabritiid* /n/ *[chem]* sulphide. *kabritiid il-ſidrujiin* hydrogen sulphide.
كبريتيك *kabritiik: ḥaamiḳ kabritiik [chem]* sulphuric acid.
اتكبرت *ſitkabrit* or *ſikkabrit* /vi/ to be sulphurated. - iva *mitkabrit*.

ك ب ر ت ²
كوبرتة *kubirta* <It *coperta*> /n pl *-aat*/ coverlet for a bed, bedspread. - also *kufirta*.

ك ب ر ى
كوبرى *kubri* <T *köprü*> /n pl *kabaari*/ **1** bridge. **2** *[dent]* bridge. **3** thwart (of a Nile boat).
¶ *ʒamal kubri* (1) to allow the ball to pass between one's legs (in soccer). (2) to arch the back in order to avoid a shoulder penalty (in wrestling).

ك ب ر ى ا
كبوريا *kaburya* <perh Gr *kabouras*> /coll n/ crab(s).
كبوريانة *kaburyaaya* /unit n, pl *-aat*/ a crab.

ك ب ر ى ه
كبريه *kabareeh* <Fr *cabaret*> /n pl *-aat*/ night-club.

ك ب س
كبس *kabas (i)* /vt/ **1** to compress, press down, pack tightly. *bi-nikbis il-ḳuṭn[i] fil-ſakyaas* we pack the cotton down in the sacks. **2** to frustrate or embarrass by proving wrong. *kabas-ni w-nigiḥ* to my embarrassment, and contrary to my expectation, he succeeded. **3** to fend off (one's opponent, in wrestling). **4** *[magic]* to jinx into sterility. **5** to press down on. *ſikbis ig-garḥ[i] b-bunn* press ground coffee on the wound (to stop it from bleeding). **6** *[coarse]* to copulate with, stuff. – /vi/ **7** to exert pressure. *baṭn-i kabsa ʒalayya* I feel bloated. **8a** to converge, close in. *buṣṣ[i] ḳabl iz-zaḥma ma tikbis* take a look before the crowd closes in. ‖*ſin-noom kaabis ʒaleeha* sleep is overcoming her. **8b** to raid. *ſil-buliṣ kabas ʒal-yurza* the police raided the hashish den. - vn *kabasaan, kabs*; ava *kaabis*; pva *makbuus*.
كبس *kabs* /vn/ ‖*ʒagala kabs* a solid tyre. - *ḥafiif kabs* poor grade of hashish.
كبسة *kabsa* /n pl *-aat*/ **1** instance noun of *kabs*. ‖*kabsa [joc]* there! got you! (when proving that someone is wrong). **2** pressing, any item pressed by machine, particularly in the record industry or in metal-work. **3** surprise search, raid (usually for contraband).
كبس *kubs* /n pl *ſikbaas*/ *[elec]* plug.
كبّاس *kabbaas* /n pl *-aat*/ plunger, piston. ‖*ſid-dunya fuṇya wiz-zaman kabbaas [prov]* ≈ time waits for no man. - *ḥagar il-kabbaas* stone rubbed against mother-of-pearl in folk medicine, for the treatment of women in confinement and those with purulent ophthalmia.
كابوس *kabuus* /n pl *kawabiis*/ nightmare.
كبيس *kabiis* /adj/ pressed, compressed. *balaḥ kabiis* pressed dates. ‖*sana kabiisa* leap year.
مكبس *makbas* /n pl *makaabis*/ **1** pressing machine, press. **2** piston, plunger.
اتكبس *ſitkabas* or *ſikkabas* /vi/ passive of *kabas*. - iva *mitkibis*.
انكبس *ſinkabas* = *ſitkabas*. - iva *minkibis*.
كبّس *kabbis* /vt/ **1** to pack down, press down. *kabbisit id-diḳiiḳ fiṣ-ṣafaayiḥ* she packed the flour down in the tins. **2** to massage. *kabbis ḍahr-i* give me a back-rub! **3** to mate with (of fowl). - vn *takbiis*; ava/pva *mikabbis*.
مكبّساتى *mikabbisaati* /n pl *-yya/ [trad soc]* masseur (in a Turkish bath).
اتكبّس *ſitkabbis* or *ſikkabbis* /vi/ passive of *kabbis*. - iva *mitkabbis*.

ك ب س ت
كوبستة *kubista* <T *küpeşte* from Gr> /n pl *-aat*/ (wooden) handrail. - also *kubiſta*.

ك ب س و ل
كبسول *kabsuul* <Fr> /coll n/ capsule(s).
كبسولة *kabsuula* /inst n, pl *-aaṭ, kabasiil*/ a capsule.

ك ب س و ن
كبسون *kabsuun* <poss Fr *capsule*> /coll n/ **1** snap fastener(s), press stud(s). **2** eyelet(s). **3** cap(s) (for toy guns).
كبسونة *kabsuuna* /unit n, pl *-aat, kabasiin*/ **1** a snap fastener, a press stud. **2** an eyelet. **3** a cap.

ك ب ش ¹
كبش *kabaf (i)* /vt/ **1** to take a handful of. *kabaf milabbis wi-ddaa-ni* he took a handful of sugar-coated almonds and gave them to me. **2** to clutch, clutch at. *b-aḥiss[i] f-baṭn-i zayy[i] ma tkuun ḥaaga kabfaa-ha* I feel as if something were clutching at my stomach. - vn *kabafaan, kabf*; ava *kaabif*; pva *makbuuf*.

كبشة *kabʃa* /n pl *-aat, kubaʃ/* **1** handful. *ḥuṭṭ' kabʃit ṣabuun mabʃuur fi-mayyit il-ɣasiil* put a handful of soap flakes in the washing water. ‖ *ʕandu kabʃit ʕiyaal* he has a bunch of children. **2** ladle. *ʃilli ʃiddaa-hum bik-kabʃa yiddii-na bik-kustibaan [prov]* may He who gave them by the ladle(ful) give to us by the thimble(ful) (said of one who has been fortunate).
اتكبش *ʃitkabaʃ* or *ʃikkabaʃ* /vi/ passive of *kabaʃ*. - iva *mitkibiʃ*.
كبّش *kabbiʃ* /vi/ **1** to take successive handfuls. *ʕali baaba daxal il-maɣaara wi-kabbiʃ fil-filuus* Ali Baba entered the cave and grabbed the money in handfuls. *niḥuṭṭ is-simaad bit-takbiiʃ* we put down the fertilizer by handfuls. **2** to cling. *mikabbiʃ fil-ʃarḍ* clinging to the ground. - vn *takbiiʃ*; ava *mikabbiʃ*.

[2] (ك ب ش)
كبش *kabʃ* /n pl *kibaaʃ, ʃakbaaʃ/* (stud) ram. ‖ *kabʃ' fida* scapegoat.
كبشة *kubʃa* <T *kopça*> /n pl *kubaʃ/* hook and eye.

ك ب ش ت
كوبشتة *kubiʃtaʔ* <T *küpeşte* from Gr> /n pl *-aat/* (wooden) handrail. - also *kubišta*.

ك ب ك see ك ب و ك : *kabuuk*

ك ب ك ب
كبكب *kabkib* /vt/ to spill repeatedly. - vn *kabkaba*; ava/pva *mikabkib*.
اتكبكب *ʃitkabkib* or *ʃikkabkib* /vi/ passive of *kabkib*. - vn *tikabkiib*; iva *mitkabkib*.

[1] ك ب ل
كابل *kabl* <Fr> /n pl *-aat, kawaabil, kababiil, kawabiil/* (electric) cable.

[2] ك ب ل see ك ب و ل ى : *kabuuli*

ك ب ل ى ه
كوبليه *kubleeh* <Fr *couplet*> /n pl *-aat/* verse of a song or poem.

[1] ك ب ن see ك ب ب ن ى : *kubbaniyya*

[2] ك ب ن see ك ب و ن : *kubuun, kubuuna*

[3] ك ب ن see ك ب ى ن : *kabiina*

ك ب ن ى ه
كبنيه *kabineeh* <Fr *cabinet*> /n pl *-aat/* lavatory, toilet. *kabineeh ʃafrangi* pedestal lavatory upon which one sits. *kabineeh baladi* lavatory with foot pedestals over which one squats. ‖ *ʕamal kabineeh* and *raaḥ il-kabineeh* he used the lavatory, he went to the bathroom.

ك ب و ك
كبوك *kabuuk* /n/ kapok, Java cotton.

ك ب و ل ى
كابولى *kabuuli* <poss It *capolo*> /n pl *kawabiil/* **1** prop. **2** cantilever, bracket, corbel.

ك ب و ن
كبون *kuboon, kubuun* <Fr *coupon*> /n pl *-aat/* **1** coupon. **2** *[finan]* dividend certificate.
كبونة *kuboona, kubuuna* = *kuboon*.

[1] ك ب ى
كبى *kaba (i)* /vi/ **1** to become dull (of colours). **2** to become dim (of light). - ava *kaabi*.
كابى *kaabi* /adj */ **1** dull, matt (of colours). *ʃabyaḍ kaabi* off-white, whitish. **2** lustreless, tarnished (of metal surfaces). **3** greyish, ashen (of complexion).

[2] ك ب ى
كوبيا *kubya* <It *copia*> /n/ (carbon or xerox) copy. *ɋalam kubya* copying pencil, indelible pencil. ‖ *ʃaay kubya [deris]* extra strong tea. - *leela* (or *yoom) kubya* one hell of an evening (or day), as in *lelt-ik ḥa-tibɋa kubya* you're in for a very tough evening!

ك ب ى ن
كابينة *kabiina* <It *cabina*> /n pl *kabaayin/* **1** cabin. *kabiina ʃamsiyya* beach tent. **2** compartment (in a train). **3** caterer's hamper of crockery.

ك ت أ و ت
كتاوت *kataawit* <Engl *cut-out*> *[auto]* voltage regulator.

ك ت ب
كتب *katab (i)* /vt/ **1** to write. *miin katab il-muzakkira di* who wrote this memo? *ʃid-duktoor katab-li rufitta* the doctor wrote me a prescription. *ʃil-kitaaba ʕal-makana* typing. ‖ *katab kitaab-u ʕal-bint [Isl]* he made the contract to marry the girl. - *katabuu-li ḥittit ʃarḍ* they made a piece of land over to me, they wrote a piece of land in my name. **2** to foreordain, destine (of God). - vn *kitaaba, katb, katabaan*; ava *kaatib*; pva *maktuub*.

كتابة *kitaaba* /n pl *-aat*/ **1** writing, piece of writing. ‖*niɛmil qurɛa - malik walla ktaaba* let's spin a coin - heads or tails? **2** inscription. **3** /no pl/ writing system, script.

كاتب *kaatib*[1] **1** /ava/ ‖*ʕaala katba* typewriter. *ḫ-atɛallim ʕaala katba* I shall learn to type. — /n/ **2** /pl *kuttaab, kataba*/ secretary, clerk. *baʃkaatib* chief clerk. *kaatib il-maḥkama* clerk of the court. *ɋalam ik-kuttaab* secretarial pool. **3** /pl *kuttaab, katbiin*/ writer, author. *kaatib bil-ḫitta* a freelance writer.

مكتوب *maktuub* /adj/ predestined. *ʕilli maktuub ɛal-gibiin laazim tiʃuuf-u l-ɛeen [prov]* ≈ what will be will be.

كتاب *kitaab* /n/ **1** /pl *kutub*/ book. *ʕil-kitaab il-muqaddas* the Bible. *kitaab illaah* the Koran. ‖*wi-kitaab illaah* oath to enjoin belief in the speaker's words, as in *wi-kitaab illaah il-wiliyya di naḫasit-ni* this woman has really jinxed me! **2** /no pl/ marriage contract.

كتابى *kitaabi* /adj/ **1** written. *ʕamr*[i] *ktaabi* an order in writing. **2** clerical. *ʕik-kadr*[i] *ik-kitaabi* the clerical grade (as an entire group).

¶ *kitabiyyan*↑ /adv/ in writing. *bi-yɋaddim ir-raʕy il-qanuuni kitabiyyan* he presents the legal view in writing.

كتبجى *kutubgi* /n pl *-yya*/ book dealer.

كتبى *kutbi* /n pl *kutbiyya*/ book dealer.

الكتبخانة *ʕik-kutubxaana* /prop n/ *[obsol]* the Egyptian National Library.

كتيبة *katiiba* /n pl *kataayib, kataaʕib*↑/ *[mil]* grouping corresponding roughly to a battalion. ‖*ḫizb il-kataayib* (or *il-kataaʕib*) the Phalangist Party (in Lebanon).

كتّاب *kuttaab* /n pl *katatiib*/ traditional school in which the Koran is taught. ‖*lamma ʃaab wadduu ik-kuttaab [prov]* after he had become an old man, they sent him to elementary school (said in respect of an action taken after its proper time).

مكتب *maktab* /n pl *makaatib*/ **1** office, bureau. *maktab fanni* a technical bureau. **2** desk. *ḫ-aɋuum min ɛala maktab-i* I'll get up from my desk. **3** (also *ʕooḍit maktab*) study.

مكتبة *maktaba* /n pl *-aat*/ **1** bookshop. **2** library. **3** stationery shop. **4** bookcase.

مكتبى *maktabi* /adj */ **1** pertaining to an office. *ɛamal maktabi* office work. *ʕadawaat maktabiyya* office supplies. **2** pertaining to a library. *tanẓiim maktabi* library science.

مكتبجى *maktabgi* /n pl *-yya*/ *[obsol]* book dealer.

اتكتب *ʕitkatab* or *ʕikkatab* **1** to be written. **2** to be foreordained, be destined. ‖*ʕikkatab-lu ɛumr*[i] *gdiid* he had a new lease of life. - iva *mitkitib*.

انكتب *ʕinkatab* = *ʕitkatab*. - iva *minkitib*.

كتّب *kattib* /vt/ to cause to write, make write. *kattib-ha gawaab* he made her write a letter. - ava *mikattib*.

اتكتّب *ʕitkattib* or *ʕikkattib* /vi/ passive of *kattib*. - iva *mitkattib*.

كاتب *kaatib*[2] /vt/ to write to, correspond with. *la bi-ykatib-ni wala b-akatb-u* he doesn't write to me and I don't write to him. - vn *mikatba, mukatba*; ava *mikaatib*.

مكاتب *mukaatib* /n */ correspondent (of a newspaper etc.).

مكاتبة *mukatba* /n pl *-aat*/ item of (written) correspondence. *yisallim il-mukatbaat il-xaṣṣa bil-qaḍiyya* he delivers correspondence particular to the case. *mukatbaat rasmiyya* official correspondence.

اتكاتب *ʕitkaatib* /vi/ to write to one another, carry on a correspondence. - ava *mitkaatib*.

اكتتب *ʕiktatab* /vi/ to subscribe, pay a contribution. *ʕiktatabu fil-maʃruuɛ il-xayri* they subscribed to the charity project. - vn *ʕiktitaab*; ava *miktitib*.

استكتب *ʕistaktib* /vt/ to force (s.o.) to write. *ʕistaktibuu-ni ʕiqraar* they forced me to write a confession. - vn *ʕistiktaab*; ava/pva *mistaktib*.

ك ت ت [1]

كتّ *katt*[1] *(u)* /vt/ *[rur]* to chop, mash (food for chicks). *kattit il-barsiim lik-katakiit* she chopped up the clover for the chicks. - vn *katt, katataan*; ava *kaatit*; pva *maktuut*.

كتّ *kutt* /onom/: *kutt*[i] *kutt*[i] *kutt*[i] ... sound made to call chicks. see further under ك ت ك ت [1]

اتكتّ *ʕitkatt* or *ʕikkatt* /vi/ passive of *katt*[1]. - iva *mitkatt*.

انكتّ *ʕinkatt* = *ʕitkatt*. - iva *minkatt*.

كتّت *kattit*[1] = *katt*[1]. - ava/pva *mikattit*.

اتكتّت *ʕitkattit*[1] or *ʕikkattit*[1] /vi/ passive of *kattit*[1]. - iva *mitkattit*.

ك ت ت [2]

كتّ *katt*[2] *(u)* /vt/ **1** to throw out, *kutt-u barra* throw him out! **2** to secrete, ooze. *wiff-u katt*[a] *ɛaraq* his face was dripping with sweat. — /vi/ **3** *[slang]* to make off. *kutt*[i] *ya waad* buzz off, kid! *katt*[i] *min is-sign* he escaped from prison. - vn *katataan*; ava *kaatit*; pva *maktuut*.

كتّيت *kutteet* /n pl *kutteeta*/ *[mil slang]* one who frequently goes absent without leave.

كتّت *kattit*[2] /vt/ to send off, shoo away. *ʕaxiiran kattitna l-waad* finally we chased the kid away. - ava/pva *mikattit*.

اتكتّت ʔitkattit[2] or ʔikkattit[2] /vi/ to be sent off, be shooed away. - iva *mitkattit*.

ك ت ت[3]

كتّت *kattit*[3] /vt/ to tangle, snarl. - vn *taktiit*; ava/pva *mikattit*.

مكتّت *mikattit* /adj/ **1** tangled, snarled. **2** kinky, frizzy (of hair).

اتكتّت ʔitkattit[3] or ʔikkattit[3] /vi/ to be tangled, be snarled. - iva *mitkattit*.

ك ت ت[4] see ك ط ط

ك ت ر

كتر، كثر *kitir, kutur (a)* /vi/ **1** to become numerous, proliferate. *kitrit il-ɛaṣafiir min xamsiin sana* sparrows have become numerous over the last fifty years. *lamma ṭ-ṭalq[i] yiktar wi-yiigi wara baɛḍ* when the labour contractions increase and come in (quick) succession. **2** to become widespread, become extensive: *ʔil-faqr[i] kitir fil-balad* poverty has become widespread in the country. **3** to increase in intensity, be or become compounded, become more so. *kitir zaɛal-u* he got more upset. - vn *kutr, kutra*.

كتر، كثر *kutr* /n/ **1** great deal, large amount. *min kutr-u yɛallaquu fi-ḥbaal* there's so much of it they hang it on ropes. **2** overabundance. *kutr il-makwa bi-ywaqqaɛ if-faɛr* too much use of curling tongs makes the hair fall out. *kutr il-ḥuzn[i] yɛallim il-buka [prov]* too much grief teaches one to weep.

¶ *min kutr[i] ma* because of the (great) extent to which. *bi-tilḥas ṣawabiɛ-ha baɛd il-ʔakl[i] min kutr[i] ma hiyya mabsuuṭa* she licks her fingers after eating, so delighted is she.

كترة، كثرة *katra, kutra, kasra*[1] /n/ (large) quantity, abundance. *ʔil-katra tiɣlib if-fagaaɛa [prov]* numbers overwhelm courage. *bi-katra* (1) in abundance. *bi-yifrab bi-kutra* he drinks a lot. (2) often. *bi-yustaɛmal bi-kasra* it is often used.

كتير، كثير *kitiir* **1** /adj pl *kutaar*/ many, numerous. *banaat kitiira* (or *kitiir*) many girls. *ɛiyaal kitiir* (or *kutaar*) many children. *ʔin-naas kutaar ɣawi* there are a great many people. *ʔanwaaɛ is-sibaaḥa ktiir* there are many styles of swimming. ‖*fiwayya ktaar* (1) a good few, a good many. (2) a good while. **2** /n/ great deal, great number. *kitiir min in-naas mif laɣyiin sakan* a great number of people can't find housing. *niɛiif bil-ɣaliil lamma ygii-na l-kitiir* we live on little until we have plenty. *ʔaḥsan bi-ktiir* better by a long shot, much better. ‖*la bi-ktiir wala b-ɣaliil* not for anything. - *faat il-kitiir ma-baɣa ʔilla l-ɣaliil* ≈ the worst is over. - *bik-kitiir* at most, as in *ḥa-nṿiib nuṣṣ[i] saaɛa bik-kitiir* we'll be gone half an hour at the most. **3** /adv/ **3a** much, a lot. *ɛayza tnaam kitiir* she needs to sleep a lot. **3b** often. *kitiir lamma niftaḥ il-balaḥ nilaaɣi ḥaʃaraat* often, when we open up dates, we find insects. *kitiir law farraṿna toob nilaaɣi ʔaxr-u mkarmiʃ* often, if we unravel a bolt (of cloth), we find that the end piece of it is crumpled.

أكتر، أكثر *ʔaktar* /el/ more, most. *(ʔinta) ɛaawiz ʔaktar min kida* (1) do you want more than this? (2) what more could you ask for! *miʃ ḥa-nuɣɛud ʔaktar min nuṣṣ[i] saaɛa* we won't stay more than half an hour. *ʔaktar waɣt[i] mumkin* the longest possible time. *ʔalam yidawwax-u ʔaktar ma huwwa daayix* a pain which makes him even more dizzy. *ɛawz-u yfuf-li faɣɣa bukra ʔaw baɛd[i] bukra ɛala l-ʔaktar* I want him to find me an apartment tomorrow or the next day at the latest. - /adverbially/ *ʔik-kuḥḥa b-tiigi ʔaktar bil-leel* the cough comes more frequently at night.

أكتريّة، أكثريّة *ʔaktariyya, ʔaktariyya* /n/ majority. *ʔaktariyyit in-naas* most people. ‖*bil-ʔaktariyya* at most.

كتيرا، كثيراء *kitiira* /n/ *[bot]* tragacanth.

كتّر، كثّر *kattar* /vt/ **1** to increase in number or quantity. *ḥa-ykattar min id-dibiiḥ* he'll get a lot of meat together. *ma-tkattar-lahaa-ʃ il-mayya* don't add much water to it. ‖*kattar (ʔalf[i]) xeer-ak* (may God increase your bounty) ≈ thank you very much. — /vi/ **2** to go too far. *laɣeet-u ḥa-ykattar fa-ɣult[i] balaaʃ xinaaɣ* I saw he was going to turn abusive so I decided to stop quarrelling. ‖*miʃ ḥ-akattar ɛaleek* I'll make it short, I won't take too much of your time. **3** to seek a large quantity. *ʔil-balaaʃ kattar minnu [prov]* make the most of what is free. **4** to become broody (of a hen etc.). - vn *taktiir*; ava *mikattar*.

اتكتّر *ʔitkattar* or *ʔikkattar* /vi/ to be increased in number or quantity. - iva *mitkattar*.

اتكاثر، تكاثر *ʔitkaatir* or *ʔikkaatir* /vi/ **1** to be numerous, be many. *ʔitkatru ɛalayya* they outnumbered me. **2** to multiply, increase in number. - ava *mitkaatir*.

استكتر، استكثر *ʔistaktar* /vt/ **1** to consider (too) much. **2** to seek or provide in quantity. - vn *ʔistiktaar*; ava *mistaktar*.

ك ت ر ك ت

كتراكتا *kataraktа* /n/ *[path]* cataract.

(ك ت ش)

كتش *katʃ* <Engl and Fr>: *muṣarɛit katʃ* catch-as-

catch-can style of wrestling.
كوتش *kutʃ* <Engl> /n pl *-aat*/ (sports') coach.

ك ت ش ى ن
كوتشينة *kutʃiina* <perh It *giochina* a little game> /n/ **1** /coll n/ playing-cards. **2** /pl *katafiin*/ deck of cards.

ك ت ع
كتع *kataɛ* /n/ deformity of the arm.
أكتع *ʔaktaɛ* /adj, fem *katɛa*, pl *kutɛ*/ having a deformed arm.
كتّع *kattaɛ* /vt/ to leave (s.o.) with a crippled arm. ‖*xaṭṭaaṭ mikattaɛ* a grossly inept calligrapher. -vn *taktiiɛ*; ava/pva *mikattaɛ*.
اتكتّع *ʔitkattaɛ* or *ʔikkattaɛ* /vi/ passive of *kattaɛ*. -iva *mitkattaɛ*.

ك ت ف
كتف *kitf* /n pl *kitaaf, ʔaktaaf, kutuuf*/ **1a** shoulder. *ʃaalit il-bint*[a] *ɛala kitf-a-ha* she carried the girl on her shoulder. *ʃaal il-masʔuliyya ɛala ktaaf-u* he shouldered the responsibility. ‖*ʔil-haziima bil-kitf* (in wrestling) defeat of the opponent by pinning both his shoulders to the ground. -*ẓarrii-ni ɛarḍ*[i] *ktaaf-ak* let me see the back of you! - *ʔiid-i ɛala kitf-ak* ≈ I'm with you all the way! - *ʔibn-u ɛala kitf-u w-huwwa daayir yidawwar ɛalee [prov]* ≈ he can't see what is under his nose. **1b** *[soccer]* shoulder push. **1c** withers (of a horse). **2** side support. *kitf*[i] *baab* door-jamb. *ʔaktaaf kubri* end supports of a bridge. *sillim bi-ʔaktaaf [naut]* ladies' ladder. **3** *[naut]* bow. *kitf il-yimiin* the starboard bow.
كتفا *katifan: katifan silaaḥ [mil]* shoulder arms!
كتّافة *kattaafa* /n pl *-aat*/ epaulette, shoulder pad.
كتّف *kattif* /vt/ **1a** to bind the arms of, truss up. *ṭalaata ykattifuu w-yiḥill*[i] *nafs-u* three people tie his hands behind his back and he gets himself loose. **1b** to truss (a fowl for cooking). *wizza mkattifa* (1) a trussed goose, (2) a whole goose. **2** to pin (s.o.'s) shoulders to the ground (in wrestling). - vn *taktiif*; ava/pva *mikattif*.
تكتيفة *taktiifa* /n pl *-aat*/ instance noun of *taktiif*.
مكتّف *mikattif* /pva/ ‖*babuur mikattif [naut]* a weather-bound ship. -*makana mkattifa* a labouring engine.
اتكتّف *ʔitkattif* or *ʔikkattif* /vi/ passive of *kattif*. -iva *mitkattif*.

[1] ك ت ك ت see also [1] ك ت ت
كتكت *katkit*[1] /vt/ to call (chicks) by making the sound of kut-kut-kut. -vn *katkata*; ava/pva *mikatkit*.
كتكوت *katkuut* /n pl *ḳatakiit*/ chick, young chicken. *ʔilli yxaaf min il-ɛirsa ma-yrabbii-ʃ katakiit [prov]* he who fears the weasel raises no chicks. ‖*ʔil-katkuut il-faṣiiḥ mil-beeḍa yṣiiḥ [prov]* ≈ talent shows itself early.
كتاكت *kataakit: ya ḳalb*[i] *ya kataakit yaama-nta ʃaayil* (or *saamiɛ) wi-saakit [women in trad soc]* poor heart, how much you bear in silence!
اتكتكت *ʔitkatkit*[1] or *ʔikkatkit*[1] /vi/ passive of *katkit*[1]. -vn *tikatkiit*; iva *mitkatkit*.

[2] ك ت ك ت see also [3] ك ت ت
كتكت *katkit*[2] /vt/ to make (hair) frizzy. -vn *katkata*; ava/pva *mikatkit*.
مكتكت *mikatkit* /adj */ kinky, frizzy (of hair).
اتكتكت *ʔitkatkit*[2] or *ʔikkatkit*[2] /vi/ to become or be made frizzy (of hair). - ava/iva *mitkatkit*.

ك ت ل
كتلة *kutla* /n pl *kutal, kutlaat*/ **1** block. *kutlit xaʃab* a block of wood. *kutlit tirbaas* breech block. **2** bloc. *ʔik-kutla f-ʃarḳiyya* the Eastern bloc. **3** *[phys]* mass.
كتّل *kattil* /vt/ **1** to pile up, throw in a pile. *kattil il-ɛilab il-faḍya fir-rukn*[i] *da* pile up the empty cans in that corner. **2** to mass. *kattilu dabbabaat ɛal-ḥuduud* they massed tanks along the border. — /vi/ **3** to clot, form clots (of blood, and the like). -vn *taktiil*; ava/pva *mikattil*.
اتكتّل *ʔitkattil* or *ʔikkattil* /vi/ **1a** to be piled up. **1b** to be massed. **2a** to form a (political) bloc. **2b** to gang up. **3** to clot, form clots. - ava/iva *mitkattil*.

ك ت ل و ج
كتلوج *kataloog* <Fr> /n pl *-aat*/ **1** catalogue. **2** (instruction) manual.

ك ت ل ى ك
كاثوليك *katuliik* <Fr> /coll n/ Catholics. also *kasuliik*.
كاثوليكى *katuliiki* **1** /adj/ Catholic. **2** /n/ a Catholic. also *kasuliiki*.

ك ت م
كتم *katam (i)* /vt/ **1** to restrain, curb, suppress. *katam nafas-u* he held his breath. *ziɛilt*[i] *moot minnu bass*[i] *katamt*[i] *f-nafs-i* I got very upset with him but hid my feelings. ‖*ʔiktim sirr-ak (wi-ʃki l-rabb-ak) [prov]* keep your secret (and complain (only) to your Lord). **2** to muffle, dampen (sound). *ʔif-fakmaan bi-yiktim ṣoot il-mutoor* the exhaust system muffles the sound of the engine. **3** to stop up, seal. *katam il-ḳidra ḳabl*[i] *ma kamar-ha* he sealed the *fuul* pot tight before burying it in the earth. *ʔif-fiifa maktuuma* the water-pipe is block-

ed. **4** to inhale (smoke) and hold it in. **5** to silence, shut up. *ma tiktim il-waad* why don't you shut the kid up! **6a** *[soccer]* to trap (the ball) with the foot. **6b** to block a smash (in tennis or volleyball). — /vi/ **7** to become close, stuffy or oppressive (of weather). **8** to have an oppressive effect. *ʔil-ʔakl[i] katam ɛala ɋalb-i* the food made me feel bloated. - vn *katamaan, katm, kitmaan*; ava *kaatim*; pva *maktuum*.

كتمة *katma[1]* /n/ **1** /pl *-aat*/ instance noun of *katm*. ‖ *ʔitkatam ḳatmit il-ɛads* (or *il-bunn*) to clam up. **2** /no pl/ stillness, closeness (of weather).

كتمان *kitmaan[1]* /n/ secrecy, confidential relationship.

كاتم *kaatim* /ava/ ‖ *kaatim ṣoot* silencer (of a gun).

كاتمة *katma[2]* /n pl *-aat*/ damper (on a piano).

كتوم *katuum* /adj */ uncommunicative, reticent.

كتيمى *kutteemi* /adv/ in secret. *ʔitgawwizu kutteemi* they married secretly.

اتكتم *ʔitkatam* or *ʔikkatam* /vi/ **1** passive of *katam*. **2** to stop talking. *ʔikkasaft[i] wi-kkatamt* I got embarrassed so I shut up. *ʔitkitim katma* shut up! - ava/iva *mitkitim*.

انكتم *ʔinkatam* = *ʔitkatam*. - ava/iva *minkitim*.

كتم *kattim* /vi/ to keep quiet, maintain silence. *kattim ɛala l-mawḍuuɛ da* keep quiet on that subject. - vn *taktiim*; ava *mikattim*.

اتكتم *ʔitkattim* or *ʔikkattim* /vt/ to keep quiet about. *ʔikkattimit xabar wiladt-u* she concealed the news of his birth. - ava *mitkattim*.

ك ت ن

كتان *kittaan* /n/ **1** flax. *bizr[i] kittaan* linseed. **2** linen. **3** tow (used in caulking boats).

ك ت و ت see ك ت أ و ت : *kataawit*

ك ت ى ن

كاتينة *katiina* >It *catena*> /n pl *-aat, kataayin*/ **1** (fine) chain. *katiinit saaɛa* watch chain. **2** *[auto]* timing chain.

ك ث ب see ك س ب [3]

ك ث ر see ك ت ر

ك ث ف see ك س ف [2]

ك ث ل ك see ك ت ل ى ك and ك س ل ك

ك ح ت

كحت *kaḥat (a)* /vt/ **1** to scrape. **2** *[surg]* to curette. - vn *kaḥt, kaḥataan*; ava *kaaḥit*; pva *makḥuut*.

كحيت *kaḥiit* /adj pl *kaḥaayit*/ seasoned, hardened, weathered. *mara kaḥiita* a woman who's been around.

كحّاتة *kaḥḥaata* /n pl *-aat*/ curette.

اتكحت *ʔitkaḥat* or *ʔikkaḥat* /vi/ passive of *kaḥat*. - iva *mitkiḥit*.

انكحت *ʔinkaḥat* = *ʔitkaḥat*. - iva *minkiḥit*.

كحّت *kaḥḥat* /vt/ to scrape (a number of things, or one thing a number of times). - vn *takḥiit*; ava/pva *mikaḥḥat*.

مكحّت *mikaḥḥat* /adj/ penniless.

اتكحّت *ʔitkaḥḥat* or *ʔikkaḥḥat* /vi/ passive of *kaḥḥat*. - iva *mitkaḥḥat*.

ك ح ح

كحّ *kaḥḥ (u)* /vi/ to cough. - vn *kaḥḥ, kaḥaḥaan*; ava *kaaḥih*.

¶ *kaḥḥ[i] maɛa* to argue with (s.o.). *ʔinta ḥa-tkuḥḥ[i] mɛaaya* will you argue with me?

كحّة *kaḥḥa* /inst n, pl *-aat*/ a single act of coughing, a cough.

كحّة *kuḥḥa* /n/ cough, ailment characterized by coughing. *kuḥḥa wiḥfa* a bad cough.

ك ح ك

كحك *kaḥk* /coll n/ cookies of flour, butter, and sometimes a sweet filling or a dusting of sugar, baked for special occasions (religious feasts in particular). *baɛd il-ɛiid ma-yinfitil-f[i] kaḥk [prov]* (after the feast, (the dough for) *kaḥk* is not twisted) ≈ you don't hang up streamers after Christmas.

كحكة *kaḥka* /n pl *-aat*/ **1** /unit n/ a cookie. *ʔil-kaḥka f-ʔiid il-yatiim ɛagaba [prov]* (a cookie in the hand of an orphan is a marvel) to some, a little can mean a lot. **2** *[naut]* salvage float. **3** *[slang]* five-pound note (among pickpockets). **4** *[slang]* fail-grade (among school-children).

كحكاية *kaḥkaaya* = *kaḥka* 1, 3, and 4.

ك ح ك ح

كحكح *kaḥkaḥ* /vi/ **1** to have a severe cough. **2** to become decrepit. *ɛarabiyya mkaḥkaḥa* a worn-out old car. - vn *kaḥkaḥa*; ava *mikaḥkaḥ*.

كحكح *kuḥkuḥ* /adj invar/ old, decrepit.

ك ح ك و

كحكو *kaḥku* /n/ style of serving in the game of *xara* (q.v.). - also *kaɛku*.

ك ح ل

كحل *kaḥal (i)* /vt/ **1** to apply kohl to (the eyes).

2 *[constr]* to point (bricks). - vn *kaḫalaan*; ava *kaaḫil*; pva *makḫuul*.

كحل *kuḫl* /n/ kohl, a black cosmetic powder based on antimony sulphide and used as eye-liner. ‖ *ʕid-dinya kuḫl* it's pitch dark out. - *gibaal ik-kuḫl[i] tifnii-ha l-maraawid [prov]* ≈ nothing lasts forever, however gradually it may be used up. - *yisraq il-kuḫl[i] mil-ɛeen [prov]* ≈ he could steal the spectacles off your nose (of an adroit thief).

كحلة *kuḫla[1]* /n/ manner or style of *kuḫl* adornment.

كحلة *kuḫla[2]* /n/ *[constr]* mortar between bricks, pointing. *kuḫla maqṣuuṣa* decorative pointing.

كحلى *kuḫli* /adj invar/ dark blue.

أكحل *ʔakḫal* /adj, fem *kaḫla*, pl *kuḫl↑*/ intensely black. *ʔakḫal il-ɛeen* having intensely dark irises contrasting with the surrounding whites.

كحول *kuḫuul* /n pl *-aat*/ alcohol.

كحيل *kuḫeel, kaḫiil* /adj/ **1** intensely dark (of the iris of the eye). **2** /pl *kaḫaayil*/ of good breed (of a horse).

كحول *kuḫull* /n pl *-aat*/ methylated alcohol, medicinal alcohol.

كحولى *kuḫulli, kuḫuuli* /adj/ alcoholic. *tasammum kuḫulli* alcoholic poisoning.

مكحلة *mukḫila* /n pl *makaaḫil*/ vessel (usually of brass) for kohl. *maat wi-baqa ɛaḍm-u makaaḫil [prov]* (he's dead and his bones have become kohl vessels) he's been dead for ages.

اتكحل *ʔitkaḫal* or *ʔikkaḫal* /vi/ pasive of *kaḫal*. - iva *mitkiḫil*.

انكحل *ʔinkaḫal* = *ʔitkaḫal*. - iva *minkiḫil*.

كحّل *kaḫḫal* /vt/ to adorn (the eyes) with kohl. *kaḫḫalit ɛenee-ha w-baṣṣit fil-miraaya* she made up her eyes with kohl and looked in the mirror. ‖ *ɛayza ɛayyil tikaḫḫal-bu ɛnee-ha* she wants a child to be proud of. - *ga yikaḫḫal-ha ɛamaa-ha [prov]* ≈ he came with the best of intentions and bungled badly. - vn *takḫiil*; ava/ pva *mikaḫḫal*.

اتكحّل *ʔitkaḫḫal* or *ʔikkaḫḫal* /vi/ to be made up with kohl (of eyes). - iva *mitkaḫḫal*.

ك ح ى

كحى *kiḫi (a)* /vi/ to become exhausted, become worn out. *ʔana kḫiit miʃ-fuxl* I'm dead beat from work. - vn *kaḫayaan*; ava *kaḫyaan*.

كحيان *kaḫyaan* /adj */ worthless, rundown, worn out. *ɛarabiyya kaḫyaana* a beat-up old car. *ṭaalib ʔalf[i] gneeh ɛala frijideer kaḫyaan* asking a thousand pounds for a worthless two-bit refrigerator.

ك خ خ

كخه *kuxxa* or *kixxa* (also *kuxx* or *kixx [children]* **1** /adj invar/ bad, dirty. **2** /interj/ don't touch!

ك د ا

كدا، كده *kida* /adv/ **1** (also *kidahú*) thus, so, in this (or that) way. *ʔil-ʔawwil tirbuṭ-u kida* first you tighten it up like this. *kida miʃ saamiɛ* I can't hear like this. *miʃ kida (walla ʔeeh)* is that so (or what)? *ʔahu kida l-kalaam (walla balaaʃ)* that is the way things should be said (or else not at all). *turudd[a] ɛalee kida trudd[a] ɛalee kida* (or *tirudd[i] kida kida) ḫa-tiḫṣal ɛarka* if you pick an argument with him a fight will break out. ‖ *kida w-kida* in a make-believe way, as in *b-aqul-lu xad ɛalaawa kida w-kida* I was pulling his leg when I told him he had been given a rise. - *ma-fii-ʃ kida* nothing like it, as in *raagil ma-fii-ʃ kida* a man in a class of his own, *ɣadwa ma-fii-ʃ kida* a marvellous dinner. - *bass[i] kida* is that all? - *miʃ qadd[i] kida* not very good, so-so. - *kida kida* (I like it) just so (comment of appreciation or approval). - *kida walla kida* superfluous, unaccounted for, as in *ma-ɛandak-ʃ[i] luqma kida walla kida* haven't you some left-over morsel or other? **2** approximately, about: *taɛaala kida s-saaɛa xamsa* come around five o'clock. *ḫ-agii-lak baɛd[i] ʔusbuuɛ kida* I'll come to see you in about a week. *ḫaaga kida* an indescribable thing, as in *fii ḫaaga kida wara l-baab* there is something I cannot make out behind the door, *simiɛt[a] ḫaaga kida bi-tnadii-ni* I heard something, I didn't know what, calling me. **3** finally, at last, after all that time. *ʔiṭḫarrak kida* just get a move on! *ɣannu kida ya banaat* won't you ever sing, girls!? ‖ *ruuḫ kida* get the hell out of here! – /demonst pron/ **4** this, that. *qal-lak kida* did he tell you this? *miin ɛamal kida* who did this? *ʔana mwaafiq ɛala kida* I agree to this. *ʔiid-ak ɛala kida* let us shake hands on that. *m-aqbal-ʃ[i] ʔaqall[i] min kida* I accept nothing less than this. ‖ *ɛala kida* (1) in this (or that) way, as in *qaɛadt[a] ɛala kida ʃahr* I carried on like this for a month, *wi-ɛala kida baqa bi-tḥibb* so, are you in love? (2) at this (or that) point, as in *sikit ɛala kida* at that he stopped talking. (3) that being the case, as in *huwwa ɛala kida miʃ ḫa-yiigi* if that's the way things are, he won't be coming.

كذا *kaza* **1** /quantifier, w foll indef n/ several. *ʔil-milaffaat di ɛala kaza nooɛ* these folders are of several types. *kaza ḫuṣaan* several horses. **2** (also *kaza w-kaza*) indicator of an unspecified thing or action. *ʔiʃ-ʃiik raqam kaza* cheque number so-and-so. *ɛamalt[i] kaza w-kaza* I did such-and-such.

ك د ب

كدب، كذب *kidib* or *kadab* (also *kizib) (i)* /vi/ to lie, tell

a falsehood. *ʕinta ḥa-tikdib ɛaleena kamaan* are you going to lie to us too? *ʕil-masal ma-yikdib-ʃ* the proverb speaks true. -vn *kidb*; ava *kaadib*.

كذب، *kidb* (also *kizb*) /coll n/ lie(s). ‖*kidb*^{i} *msaawi wala ṣidq*^{i} *mbaɛzaq [prov]* straight lying is more credible than garbled truth. *ʕil-kidb*^{i} *ma-luu-ʃ rigleen [prov]* lies have no legs.

كذبة *kidba* (also *kizba*) /unit n, pl *-aat*/ a lie, a falsehood. ‖*kidbit ʕabriil* April fool.

كاذب *kaazib* /adj/ false. *ḥaml*^{i} *kaazib* false pregnancy. *balaaɣ kaazib [leg]* a false report to the police. ‖*ʕil-gudari l-kaazib* chicken pox.

أكذب *ʕakdab* /el/ more/most false, lying or deceptive.

كذّاب، كذّاب *kaddaab* (also *kazzaab*) /adj */ **1** lying, given to lying. **2** false, spurious. ‖*nibill il-ʕarq*^{i} *balla kaddaaba* we wet the ground superficially. -*xayla kaddaaba* much ado to no purpose. — /n */ **3** liar. ‖*xallii-k wara k-kaddaab li-ḥadd*^{i} *baab id-daar [prov]* (keep after the liar as far as the door of the house) go along with a liar until he gives himself away. -*ṣaaḥib baleen kaddaab (wi-ṣaaḥib talaata ʕakdab) [prov]* one who tries to do two things at once is fooling himself (and he who tries to do three fools himself even more). -*kaddaab iz-zaffa* one who is all talk and no action. **4** /no pl/ sulphuric acid when used to determine the purity of gold.

اتكذب *ʕitkadab* or *ʕikkadab* /vi/ (impersonal) passive of *kadab*. *ʕitkadab ɛaleena* we were lied to. -iva *mitkidib*.

كذّب، كذّب *kaddib* (also *kazzib*) /vt/ **1** to give the lie to, accuse of lying. *ɛaamit kaddibit-ni f-wiff-i* she up and called me a liar to my face. ‖*ʕil-mayya tkaddib il-ʏaṭṭaas [prov]* ≈ the proof of the pudding is in the eating. **2** to contradict, deny. *kazzib xabar moot ʕabuu* he denied the news of his father's death. *katab gawaab bi-ykaddib ʃii maqaalit ʕimbaariḥ* he wrote a letter in which he refuted yesterday's article. **3** to refuse to believe. *lamma ɋult-i-lhum il-ḥikaaya di kaddibuu-ni* when I told them the story, they refused to believe me. ‖*ma-kaddib-ʃ*^{i} *xabar* to act without delay (if somewhat blindly), as in *ma-kaddibt*^{i}*-ʃ xabar wi-ruḥt aʃtiri fraax mig-gamɛiyya* without pausing for thought I went off to buy chickens from the co-op (as soon as I heard they had some for sale). — /vi/ **4** to misfire (of a gun). -vn *takdiib*; ava/pva *mikaddib*.

اتكذّب *ʕitkaddib* or *ʕikkaddib* /vi/ passive of *kaddib* 1, 2 and 3. -iva *mitkaddib*.

ك د ح

كدح *kadaḥ*↑ *(a)* /vi/ to work hard, toil. *ma-baṭṭalnaa-ʃ kadḥ*^{i} *ɫuul in-nahaar* we worked hard all day long. *ʕiṭ-ṭabaɋa l-kadḥa* the working class. -vn *kadḥ*; ava *kaadiḥ*.

ك د د^{1}

كدّ *kadd (u)* /vt/ *[trad soc]* to comb. *ruuḥi kuddi ʃaɛr-ik* go and comb your hair. *ɋaɛda bi-tkudd*^{i} *l-bint-a-ha* she's combing her daughter's hair. -vn *kadd*; ava *kaadid*; pva *makduud*.

اتكدّ *ʕitkadd* or *ʕikkadd* /vi/ to be combed (of hair). -iva *mitkadd*.

انكدّ *ʕinkadd* = *ʕitkadd*. -iva *minkadd*.

كدّد *kaddid* /vt/ to comb (hair) hard or repeatedly. -vn *takdiid*; ava/pva *mikaddid*.

اتكدّد *ʕitkaddid* or *ʕikkaddid* /vi/ passive of *kaddid*. -iva *mitkaddid*.

ك د د^{2}

كدّ *kadd (i)* /vi/ to toil. *bi-tkidd*^{a} *ɛaʃaan bint-a-ha* she slaves (at her work) for the sake of her daughter. -vn *kadd*; ava *kaadid*.

كدودى *kuduudi, kaduudi* /adj */ miserly, tight-fisted.

مكدود *makduud* /adj */ exhausted, tired.

ك د ر^{1}

كدر *kadar* /n/ perturbation, disquiet. *ʕil-ɛiiʃa kull-a-ha kadar* life is full of trouble.

كدّر *kaddar* /vt/ **1** to perturb, trouble. *kutr il-maṣariif kaddarit ɛiʃit-na* great expenses have spoiled our lives. **2** *[mil]* to give a talking to, give a dressing-down. *ʕiẓ-ẓaabiṭ bi-ykaddar il-ɛasaakir* the officer is giving the soldiers a dressing-down. -vn *takdiir*; ava/pva *mikaddar*.

اتكدّر *ʕitkaddar* or *ʕikkaddar* /vi/ passive of *kaddar*. -iva *mitkaddar*.

تكدّر *takaddur* /n/ discomfort, uneasiness.

ك د ر^{2}

كادر *kadr*^{1} <Fr *cadre*> /n pl *-aat*/ **1** frame. *bi-yirkab fil-kadr*^{i} *btaaɛ il-biyaanu* it fits into the piano frame. **2** /pl also *kawaadir*/ = *kaadir*.

كادر *kaadir* (also *kadr*^{2}) <Fr *cadre*> /n pl *kawaadir, kadraat*/ **1** pay scale. *ʕil-kaadir il-ɛaamm* the general pay scale. *ʕil-kaadir il-ʃanni* the professional scale. **2** organizational group, cadre. *ʕil-kawaadir is-siyasiyya* the political hierarchy. *kawaadir it-tanẓiim* the groupings within the (party) system.

ك د ر اج

كدراج *kadraaj* <Fr *cadrage*> /n/ *[cin]* centring.

ك د س
كدّس *kaddis* /vt/ to pile up. *zibaala mkaddisa ɛala baɛḍ-a-ha* rubbish in piles. -vn *takdiis*; ava/pva *mikaddis*.
اتكدّس *ʔitkaddis* or *ʔikkaddis* /vi/ to be piled up. -vn *takaddus*; ava *mitkaddis*.

ك د ش ¹
كدش *kadaʃ* /n/ bushy hair, kinky hair.
كدّش *kaddiʃ* /vt/ to back-comb (hair). -vn *takdiiʃ*; ava/pva *mikaddiʃ*.

ك د ش ²
كديش *kadiiʃ* /n/ work horse, nag. ‖*gamuusa kadiiʃ* an old worn-out buffalo.

ك د م
كدمة *kadma* /n pl *-aat*/ bruise, contusion.

ك د ه see ك د ا : *kidahú*

(ك د ى)
كودية *kudya*¹ <Amharic> /n pl *-aat*/ professional leader of the Sudanese type of *zaar* (usually a black woman).
كدية *kudya*² /n pl *-aat, kuday*/ *[rur]* bushy plant. *kudyit barsiim* a clump of clover.

ك د ى ا ن
كديانة *kudyaana* /n pl *-aat*/ *[coarse slang]* a woman to take to bed, a lay.

ك ذ ا see ك ز ا

ك ذ ب see ك د ب

ك ذ ل ك see ز ا

ك ر see also ك و ر ¹
كرة *kura*¹ /n pl *-aat*/ 1 sphere. *ʔil-kura l-ʔarḍiyya* the earth, the globe. *niṣfi kura* hemisphere. ‖*kuraat id-damm* corpuscles. 2 ball (game). *kurat il-qadam* football. *kurat is-salla* basketball. *ʔil-kura ṭ-ṭaaʔira* volleyball.
كروى *karawi, kurawi*¹ /adj/ 1 spherical. 2 pertaining to ballgames.

(ك ر ا ر)
كرار *karaar* (also *kalaar*) <Gr *kelari*> /n pl *-aat*/ pantry, storeroom, cellar. *yiḥarras il-quṭṭ*ª *ɛala muftaaḥ ik-karaar [prov]* (to make the cat the guardian of the storeroom key) appointing the fox to guard the chickens.
كرارة *karaara* <*Carrara* (in Italy)> /n/ Carrara marble.

ك ر ا ل
كورال *kuraal* <perh Fr> /n/ choir, chorale.

ك ر ب ¹
كرب *karb* /n/ 1 misery, wretchedness. *ʔil-fallaaḥ fi-blad-na ḥalt-u karb* the peasant in our country is in a bad way. 2 /pl *kuruub*/ affliction, tribulation. *ya mufarrig il-kuruub* (O you who dispel troubles) invocation to God in times of hardship. *ʔiza ʃtadda l-karbu haan [prov]* the severer hardship gets the nearer it is to being relieved ≈ the darkest hour is just before dawn.
كربة *kurba*¹ /n pl *kurab*/ state of wretchedness.

ك ر ب ²
كورنة *kurba*² <perh It *curva*> /n pl *-aat, kurab*/ *[obsol]* street corner. *midaan ik-kurba* well-known square in Heliopolis.
كرّب *karrab* /vt/ *[construr]* to bend (pipe, rods). -vn *takriib*; ava/pva *mukarrab*.
اتكرّب *ʔitkarrab* or *ʔikkarrab* /vi/ passive of *karrab*. -iva *mitkarrab*.

ك ر ب ب
كريب *kiribb* <Fr *crêpe*> /n pl *-aat*/ crepe fabric. *gazma kribb* crepe-soled shoes.

ك ر ب ج ¹
كرباج *kurbaag* (also *kurbaak*) <T *kırbaç*> /n pl *karabiig*/ horsewhip.
كربج *karbag* (also *karbak*) /vt/ 1 to whip. *ʔil-waad karbag in-naḥla* the boy whipped the spinning top. 2 to drive (s.o.) hard (to do s.th.). -vn *karbaga*; ava/pva *mikarbag*.
اتكربج *ʔitkarbag* or *ʔikkarbag* /vi/ passive of *karbag*. -vn *tikarbiig*; iva *mitkarbag*.

ك ر ب ج ²
كربج *karbij* <Fr *crêpage*> /vt/ to back-comb (hair). -vn *kiribaaj*; ava/pva *mikarbaj*.

ك ر ب ر –
كربراتير *karbirateer, karbarateer* <Fr> /n pl *-aat*/ carburettor.

ك ر ب س
كربس *karbis* /vt/ **1** to throw topsy-turvy in a pile. *karbisit il-huduum fir-rukn* she threw the clothes in the corner. **2** to trip, cause to stumble. *karbis-ni ʔibn ik-kalb* the s.o.b. tripped me up. - vn *karbasa*; ava/pva *mikarbis*.
اتكربس *ʔitkarbis* or *ʔikkarbis* /vi/ passive of *karbis*. - vn *tikarbiis*; iva *mitkarbis*.

ك ر ب ك see ك ر ب ج [1]: *kurbaak, karbak*

ك ر ب ظ
مكربظ *mikarbaẓ* /adj/ chubby.

ك ر ب ل
كربال *kurbaal* /n pl *karabiil*/ coarse-meshed riddle (used in threshing).

ك ر ب ن –
كربونات *karbunaat, karbunaat* <Fr> /n/ **1** carbonate. **2** baking soda, sodium bicarbonate. - also *bikarbunaat*.
كربوناتو *karbunaatu* <It> = *karbunaat*.

ك ر ب ه –
كربوهيدرات *karbuhidraat* <Engl> /coll n/ carbohydrate(s).

ك ر ب و ن
كربون *karboon* <Fr> /n/ carbon. *waraq karboon* carbon paper.

ك ر ب ى ن
كربينة *karbiina* <It *carabina*> /n pl *-aat*/ carbine.

ك ر ت [1]
كرت *karat[1], kirit (i)* /vt/ **1** to clap, slap. *karat-u ʕala qafaa* (1) he clapped him on the back of the neck. (2) he humiliated him. **2** to scratch. *ʔik-kalb[i] b-yikrit raqabt-u* the dog is scratching his neck. - vn *ʔkart*; ava *kaarit*; pva *makruut*.
اتكرت *ʔitkarat[1]* or *ʔikkarat[1]* /vi/ **1** to be clapped, be slapped. **2** to be scratched. - iva *mitkirit*.
انكرت *ʔinkarat[1]* = *ʔitkarat[1]*. - iva *minkirit*.
كرّت *karrat* /vt/ to clap (s.o.) on the back of the neck. - vn *takriit*; ava/pva *mikarrat*.
اتكرّت *ʔitkarrat* or *ʔikkarrat* /vi/ to be clapped on the back of the neck. - iva *mitkarrat*.

ك ر ت [2]
أكرت *ʔakrat* /adj, fem *karta*, pl *kurt*/ frizzy. *kull-u-hum faʕr-u-hum ʔakrat* they all have frizzy hair.

ك ر ت [3] see also ك ر د [3]
كرت *karat[2] (i)* <prob Engl> /vt/ to card (cotton). - ava *kaarit*; pva *makruut*.
اتكرت *ʔitkarat[2]* or *ʔikkarat[2]* /vi/ to be carded (of cotton). - iva *mitkirit*.
انكرت *ʔinkarat[2]* = *ʔitkarat[2]*. - iva *minkirit*.

ك ر ت [4]
كارت *kart* <Fr *carte*> /n pl *kuruut, kurúta, kurutaat*/ **1** card. *kull[i] kart[i] maktuub fii raqam il-kitaab* each card has the book number written on it. *kuruut muʕayda* greetings cards. *ʔil-kart[i] bustaal* and *ʔil-kart il-bustaal* the postcard. **2** menu. – /coll n/ **3** playing-cards. *tilʕab kart* do you want to play cards?
كرّات، كرّاث *kurraat* /coll n/ leek(s). *kurraat ʔabu fuuʃa* leek (Allium porrum). *kurraat maṣri* or *kurraat baladi* Egyptian leek (Allium kurrat).

ك ر ت ة
كرتّة *karitta* <It *carretta*> /n pl *-aat*/ light carriage, on two or four wheels, drawn by a single draught animal.

ك ر ت ن see also ك ر ن ت –
كرتن *kartin* /vi/ **1** to effect a quarantine. *kartinu ʕal-balad* they put the town in quarantine. **2** to hold (on to s.th.), retain (s.th.) for oneself. *kartinu ʕala kutub il-maktaba* they hung on to the library books. - vn *kartana*; ava *mikartin*.
اتكرتن *ʔitkartin* or *ʔikkartin* /vi/ (impersonal) passive of *kartin*. *ʔil-manṭiqa kull-a-ha tkartin ʕaleeha* the entire area was put under quarantine. - iva *mitkartin*.

ك ر ت و ن [1]
كرتون *kartoon[1], kartuun[1]* <Fr *carton*> /n/ cardboard.
كرتونة *kartoona, kartuuna* /n pl *-aat, karatiin*/ **1** /unit n/ piece of cardboard. **2** cardboard box, carton.

ك ر ت و ن [2]
كرتون *kartuun[2], kartoon[2]* <Engl> /pl *-aat*/ animated cartoon.
كرتون *kiritoon* <Fr *crétonne*> /n/ heavy cotton fabric, cretonne. *kiritoon sataan* satin-finished cretonne.

ك ر ت ى ر
كارتير *karteer* <Fr *carter*> /n pl *-aat*/ *[auto]* oil pan, (also sometimes) crankcase.

ك ر ت ى ن
كرتينة *kartiina* <It *cartina*> thin cardboard (used in book-binding).

ك ر ت ى ه
كاراتيه *karateeh* /n/ karate.

[1] ك ر ث see [4] ك ر ت

[2] ك ر ث see [3] ك ر س

ك ر خ ا ن
كرخانة *karaxaana* <T *kerhane*> /n pl/ *-aat/* brothel. *kaan ħayy il-ʕazbakiyya maʃhuur bil-karaxaana l-kibiira* the Ezbekiya quarter used to be famous for its large brothel.

[1] ك ر د
كرد *kurd* /coll n/ Kurds.
كردى *kurdi* **1** /adj/ Kurdish. **2** /n pl *ʕakraad*/ a Kurd. *bilaad il-ʕakraad* Kurdistan. **3** /n, no pl/ the Kurdish language.

[2] ك ر د
كرودية *kurudya* <perh T *koroydo*> /masc and fem n, pl *-aat*/ very gullible or naive person, a swindler's mark.
كروديايا *kurudyaaya* /n/ very gullible or naive female, a swindler's mark.
استكرد *ʕistakrad* /vt/ to dupe, take advantage of the gullibility of. *bi-yistakradu l-mudarris ig-gidiid* they take the new teacher for a ride. - vn *ʕistikraad*; ava *mistakrad*.

[3] (ك ر د)
كرد *kard* <Engl *card*> /n/ carding of fibres preparatory to spinning. *ʕil-quṭn[i] b-yruuħ min ʕamaliyyit il-kard[a] ʕala t-tamʃiiṭ* the cotton goes from carding to the combing process. see further under [3] ك ر ت
كوردة *kurda* <It *corda*> /n pl *-aat*/ cord, wire.
كورد *kurd* /n/ *[mus]* mode in Arabic music beginning on D and having E flat and B flat.

(ك ر د ا ن)
كردان *kirdaan[1]* <perh P *gardân*> /n pl *-aat, karadiin*/ **1** heavy gold necklace with pendant decorations (e.g., see Pl.F, 20). **2** /pl *-aat* only/ *[mus]* name given to the note C, octave above middle C.
كردان *kirdaan[2]* (also *ʕamuud il-kirdaan*) <prob Engl> /n/ *[auto]* Cardan joint, transmission shaft.

ك ر د ل
كردلة *kurdilla* <It *cordella*> /n pl *-aat*/ cord by which a hunter secures and carries his game.

ك ر د و ن
كردون *kurdoon* <Fr *cordon*> /n pl *-aat*/ **1** cordon, decorative cord. *kurdoon roob* dressing-gown cord. **2** cordon. *kurdoon buliiṣ* police cordon. *kurdoon ṣiħħi* cordon sanitaire.

[1] ك ر ر
كرّ *karr[1] (u)* /vt/ **1** to unravel, unwind. *bi-ykurr il-xeeṭ min il-bakara* he's unwinding the thread from the spool. **2** to spill out, spout forth. *saʃalt-u ʕan ʃanwaaʕ is-samak in-niili ʔaam karr-i-li talatiin ʃism* I asked him about the varieties of Nile fish and he upped and rattled off thirty names. — /vi/ **2a** to come unravelled. *ʃit-tirikooh karr* the knitting has become unravelled. **3** to run (of a stocking). - vn *karr, kararaan*; ava *kaarir*; pva *makruur*.
كرّ *karr[2]* /adv/ fluently (of recitation from memory). *sammaʕt-u karr* I recited it without a hitch.
كراريّة *kurariyya* /n pl *-aat*/ ball (of string, wool etc.).
اتكرّ *ʃitkarr* or *ʃikkarr* /vi/ passive of *karr* 1 and 2. - ava *mitkarr*.
انكرّ *ʃinkarr* = *ʃitkarr*. - iva *minkarr*.
كرّر *karrar* /vt/ **1** to repeat, do over. *baʕd[a] ʕaʃart iyyaam nikarrar il-ʕaziiʔ wir-rayy[i] marriteen* after ten days we repeat the hoeing and irrigation twice. ‖ *ʕalaamit takriir [mus]* repeat sign. **2** to distil, refine. *ʃif-firka b-taaxud il-bitrool wi-tkarrar-u* the company takes petroleum and refines it. *maʕmal takriir* refinery. - vn *takriir, takraar, tikraar*; ava/pva *mikarrar*; pva *mukarrar*.
تكرار *takraar, tikraar* /n/ repetition. *kutr it-takraar yiʕallim il-ħumaar [prov]* much repetition teaches (even) a donkey.
مكرّر *mukarrar* /adverbial/ **1 bis**. *ʃiṣ-ṣafħa t-talta mukarrar* page three bis, page 3a. **2** in tied or equal position. *ʃiliʕ il-ʃawwil mukarrar* he came first equal, he tied for first place.
اتكرّر *ʃitkarrar* or *ʃikkarrar* /vi/ **1** to be repeated. **2** to recur. **3** to be refined, be distilled. - iva *mitkarrar*.

[2] ك ر ر see ك ر ا ر: *karaar, karaara*

[3] ك ر ر see ك ر ى ر ا: *kureera*

ك ر ر و
كرّو *karru* <It *carro*>: *(ʕarabiyya) karru* /pl *ʕarabiyyaat karru*/ animal-drawn cart.

ك ر ز ¹
كرازة *kiraaza* /n/ *[Chr]* **1** domain or jurisdiction of the (Coptic) church. **2** preaching the Gospel, evangelization.
كرّز *karraz* /vt/ *[Chr]* to consecrate, dedicate (to the service of God). *ʕabuu-na karraz il-beet* the priest consecrated the house. - vn *takriiz*; ava/pva *mikarraz*.
اتكرّز *ʔitkarraz* or *ʔikkarraz* /vi/ to be consecrated, be dedicated (to the service of God). - iva *mitkarraz*.

ك ر ز ² see ك ر ى ز ¹: *kireez, kireeza, kirezaaya*

ك ر ز ² see ك ر ى ز ²: *kiriiza*

ك ر س ¹
كرسى *kursi* /n pl *karaasi*/ **1** chair. *kursi ḍahr* straight-backed chair. *kursi hazzaaz* rocking chair. **2** stand. *kursi muṣḥaf* Koran stand. ‖ *ʕaayit ik-kursi [Isl]* the 'throne verse' (Koran 2:255), recited for safety in time of danger. **3** *[Chr]* see. **4** *[mech]* **4a** seating. **4b** bearing. **5** single filling (of tobacco or hashish) for a water-pipe. **6** motif used in tent appliqué work (see Pl.H. 24).
كرّس *karras*¹ /vt/ to prepare (a filling of tobacco or hashish) for smoking in a water-pipe. - vn *takriis*; ava/pva *mikarras*.
اتكرّس *ʔitkarras*¹ or *ʔikkarras*¹ /vi/ passive of *karras*¹. - iva *mitkarras*.

ك ر س ²
كرّاس *kurraas, karraas* /n pl *-aat, karariis*/ copybook, exercise book.
كرّاسة *kurraasa, karraasa* = *kurraas*.
كرّس *karras*² /vt/ to dedicate, devote. *karras ḥayaat-u lil-fann* he devoted his life to art. - vn *takriis*; ava/pva *mikarras*.
اتكرّس *ʔitkarras*² or *ʔikkarras*² /vi/ passive of *karras*². - iva *mitkarras*.
متكرّس *mutakarris* /n */ *[Chr]* layman who has given up secular employment to work within the church.

ك ر س ³
كارثة *karsa* /n pl *kawaaris, karsaat*/ catastrophe.
اكترث *ʔiktaras*! /vi/ to show concern, display interest. *ʕeer muktaris bi-maṣaayib ʕahl-u* indifferent to his family's plight. - vn *ʔiktiraas*; ava *muktaris, miktiris*.

ك ر س ا ج
كرساج *kursaaj* <Fr *corsage*> /n/ top half of a dress, bodice.

ك ر س ت
كرستة *karasta* <T *kereste*> /n/ **1** lumber mill. **2** cabinet(s), cupboard(s).

ك ر س ت -
كريستال *kiristaal* <Fr> /n/ crystal (glass).

ك ر س ر -
كرسريه *karusreeh* (also *kursaleeh, karsaleeh)* <Fr *carrosserie*> /n pl *-aat*/ body of an automobile.

ك ر س ط
كرسطة *karasṭa* /n pl *-aat*/ carpet-saver made of glass, castor-cup.

ك ر س ع
كرسوع *karsuuʕ* /n pl *karasiiʕ*/ elbow. *ḥaaṭiṭ karasiiʕ* leaning on his elbows. ‖ *ʕumm*¹ *karasiiʕ* a bony hag.

ك ر س ل - see ك ر س ر -: *kursaleeh, karsaleeh*

ك ر س ى ن
كيروسين *kirusiin* <Engl> /n/ kerosene, paraffin.

ك ر س ى ه
كرسيه *kurseeh* <Fr *corset*> /n pl *-aat*/ corset.

ك ر ش ¹
كرش *karaf, karaf (u)* /vt/ **1** to drive away, drive off. *karaft*¹ *mraat-ak barra leeh* why did you throw your wife out? *lamma ʕanaam ʒat-tilitwaar yiigi l-ʏafiir yukruf-ni* when I sleep on the sidewalk the watchman comes and drives me away. **2** to dismiss, fire, expel. *ʕil-mudiir karaf-u min if-fuṿl* the director sacked him. **3** to cause (breathing) to be laboured. *nafas makruuf* laboured breathing, dyspnoea. - vn *karf, karafaan*; ava *kaarif*; pva *makruuf*.
كرشة *karfa* /n pl *-aat*/ instance noun of *karf*. *karfit nafas* (attack of) dyspnoea.
اتكرش *ʔitkaraf, ʔitkaraf* or *ʔikkaraf, ʔikkaraf* **1** to be driven away. **2** to be dismissed, be expelled. *ʔit-tilmiiz itkaraf mil-madrasa* the student was expelled from the school. **3** to be made or become laboured. *nafas-u yitkirif* he's becoming short of breath. - ava/iva *mitkirif*.
انكرش *ʔinkaraf, ʔinkaraf* = *ʔitkaraf*. - ava/iva *minkirif*.

ك ر ش ²
كرش *kirf* /n pl *kuruuf*/ paunch, pot belly.
كرشة *kirfa* /n/ tripe. ‖ *ʠaliil il-baxt*¹ *ylaaʠi l-ʒaḍm*¹ *fil-*

kirfa [prov] the unlucky man finds bones (even) in tripe. - *bi-yṭallaɛ fil-kirfa ɛaḍm* ≈ he looks for the worst in everything.
كرشاتي *kurašaati* /n pl *-yya*/ tripe-seller.
كرّش *karraš* /vi/ **1** to develop a paunch or pot belly. **2** to buckle, warp. - vn *takriiš*; ava *mikarraš*.

ك ر ش [3] see ك ر و ش : *kuruuš*

ك ر ش [4] see ك ر ى ش : *kureeša*

ك ر ش ى ه
كروشيه *kurušeeh* <Fr> /n/ crochet.

ك ر ع [1]
كرّع *karraɛ* /vt/ to cause to belch. - vn *takriiɛ*; ava *mikarraɛ*.
تكريعة *takriiɛa* /inst n, pl *-aat*/ a belch.
اتكرّع *ʔitkarraɛ* or *ʔikkarraɛ* /vi/ to belch, burp. *yaklu l-fatta w-yitkarraɛu w-yiḥmidu rabb-i-na* they eat *fatta*, burp (contentedly), and praise the Lord. - ava *mitkarraɛ*.

ك ر ع [2]
كارع *kaariɛ* **1** /n pl *kawaariɛ*/ camel, sheep or cow's foot used for food, trotter. **2** *kawaariɛ* /pl n/ pretty legs.

ك ر ف
كرف *karaf (u)* /vi/ to absorb an odour from surroundings (of food, and the like). - vn *karf*; ava *kaarif*.
كرفة *karfa* /n/ **1** odour absorbed by food, tobacco etc. from their surroundings. **2** *[path]* eczema.

ك ر ف ت ت
كرفتّة *karafatta, karafitta* <It *cravatta*> /n pl *-aat*/ tie, cravat. - also *garafatta*.

ك ر ف س
كرفس *karafs* /n/ celery.

ك ر ك [1]
كوريك *kureek[1]* <T *kürek*> /n pl *-aat, kawariik*/ **1** shovel. **2** baker's peel.
كرّاك *karraak* /n pl *karraaka*/ *[constr]* workman who controls the shovel that is dragged through concrete to mix it.
كرّاكة *karraaka* /n pl *-aat*/ dredger. *di ɛarabiyya walla karraaka* ≈ what this car needs is a new car.
كرّك *karrak* /vt/ to dredge. - vn *takriik*; ava/pva *mikarrak*.
اتكرّك *ʔitkarrak* or *ʔikkarrak* /vi/ to be dredged. - iva *mitkarrak*.

ك ر ك [2]
كوريك *kureek[2]* <Fr *cric*> /n pl *-aat, kawariik*/ **1** (hydraulic) lifting ramp. **2** car jack.
كارك *kaarik* **1** /vt/ to jack up. **2** /vi/ to pump repeatedly (e.g., when pumping the brake pedal). - vn *mikarka*; ava/pva *mikaarik*.

ك ر ك [3]
كرك *kurk* <T *kürk*> /n/ fur.

ك ر ك [4] see ك ر و ك ى : *kuruuki*

ك ر ك ب
كركب *karkib* /vi/ **1** to make a clattering noise. *naazil yikarkib bi-riglee ɛas-sillim* he is clattering down the stairs. ‖*baṭn-i bi-ṭkarkib* (1) my stomach is rumbling, I have an upset stomach. (2) I feel apprehensive, I have butterflies in my stomach. **2** to become topsy-turvy. *ʔid-dinya karkibit* everything became chaotic. — /vt/ **3** to throw into confusion. *karkib il-beet wi-mifi* he made a mess of the house and left. - vn *karkaba*; ava/pva *mikarkib*.
كركوبة *karkuuba* **1** /n pl *karakiib*/ piece of junk, worthless possession. **2** /adj invar/ old, tottering.
كركّبة *karkubba* = *karkuuba* 2.
اتكركب *ʔitkarkib* or *ʔikkarkib* /vi/ **1** to make a clattering noise. **2** to be thrown into confusion. - vn *tikarkiib*; ava/iva *mitkarkib*.

ك ر ك ت –
كركتير *karkateer* <Fr> /n invar, also pl *-aat*/ caricature, cartoon.

ك ر ك د –
كركديه *karkadeeh* /n/ **1** type of mallow (Hibiscus sabdarifa), the dried (purple) flowers of which are used in the preparation of a popular infusion. **2** a drink so prepared.

ك ر ك ر
كركر *karkar* /vi/ **1** to gurgle, make a gurgling sound (of liquid). ‖*bi-ykarkaru (ɛag-gooza)* they're smoking a water-pipe. **2** to pink, knock (of a car engine). **3** to laugh at length. *karkarna (min id-diḥk)* we laughed and laughed. - vn *karkara*; ava *mikarkar*.

ك ر ك ع
كركع *karkaɛ* /vi/ **1** to make a rattling sound. *simiɛt[i]*

karkaɛa fil-mutoor I heard a rattling in the motor. **2** to guffaw. *karkaɛ (min id-diḥk)* he roared with laughter. - vn *karkaɛa*; ava *mikarkaɛ*.

ك ر ك م
كركم *kurkum* /n/ turmeric.

ك ر ك ن د
كركندى *karakandi* /n pl *-aat*/ type of tumbler pigeon with pale grey plumage.

ك ر ك و ل see ك ر ك و ن : *karakool*

ك ر ك و ن
كراكون *karakoon* (also *karakool*) <T *karakol*> /n pl *-aat*/ police station. ‖ *karakoon silaaḥ* present arms!

ك ر ك ى ه
كروكيه *kurukeeh, kirukeeh* <Fr> /n/ croquet.

ك ر ل see ك ر ا ل : *kuraal*

ك ر م [1]
كرم *karam [1] (i)* /vt/ to favour, be generous to, bestow good fortune on. *karamuu-na* they were most generous to us. *rabb-i-na karam-ni w-laqeet taks[a] ɛala ṭuul* I was lucky enough to find a taxi right away. ‖ *ɛeen makruuma [euphem]* blind eye. - vn *karam*; ava *kaarim*; pva *makruum*.
كرم *karam[2]* /n/ generosity. ‖ *karam il-ʃaxlaaq* decency.
كرامة *karaama* /n/ **1** dignity, honour, self-respect. *ṭaɛanit-ni f-karamt-i* she hurt my pride. **2** /pl *-aat*/ miracle performed by a saint. ‖ *kull-ak karamaat* you can do the impossible.
كريم *kariim* /adj/ **1** /pl *kiraam, kuraam, kuramaa*/ generous, munificent. *rabb-i-na kariim* ≈ God will provide (phrase used in times of stress and as a gentle refusal to give to a beggar). ‖ *kariim ɛeen [euphem]* one-eyed person. **2** /pl *kiraam*/ honourable, noble. *ma tdumm[i] nafs-ak li-fillit naas kiraam* why don't you get involved with some honourable people? ‖ *ʃil-qurʃaan il-kariim* conventional designation of the Koran. - *ḥagar kariim* precious stone. — /n/ **3** Generous One (epithet of God). *liina rabb[i] ʃism-u l-kariim* we have a Lord whose name is the Generous One (expression of despair or helplessness or, when addressed to another, of consolation).
كريمة *kariima* /n/ **1** /pl *-aat*/ formal mode of reference to a daughter. **2** /no pl/ *[joc]* a kiss on the hand. *ʃiltaɛ il-kariima* kiss the hand!

أكرم *ʃakram[1]* /el/ more/most generous, munificent etc.
اتكرم *ʃitkaram* or *ʃikkaram* /vi/ passive of *karam[1]*. - iva *mitkirim*.
انكرم *ʃinkaram* = *ʃitkaram*. - iva *minkirim*.
كرّم *karram* /vt/ to honour. *ḥaflit takriim* party given in someone's honour. - vn *takriim*; ava/pva *mikarram*.
اتكرّم *ʃitkarram* or *ʃikkarram* /vi/ **1** to be honoured. **2** to be generous, be kind. *ʃiza tkarramt* if you would be so kind, please. - ava/iva *mitkarram*.
كارم *kaarim* /vt/ to treat generously. *da-ḥna zabayn-ak ya-xuu-ya - karim-na* we're your steady customers, why don't you give us special treatment? - vn *mikarma*; ava *mikaarim*.
أكرم *ʃakram[2]* = *karam[1]* (the literary passive *yukram* also occurs). *ʃallaah yikrim-ak* (1) expression of thanks for a service rendered or to be rendered, or for a compliment paid. (2) response to a beggar's importuning ≈ may God grant you good fortune! - *ʃakram-ak allaah* no offence taken! (said in the event of unseemly words or behaviour). - *ʃikraam il-mayyit dafn-u [prov]* the (best) favour you can do a dead man is to bury him. - vn *ʃikraam*; ava *mikrim*.
إكراميّة *ʃikramiyya* /n pl *-aat*/ gratuity, tip. *di ma-tuɛtabar-f[i] rafwa di ʃikramiyya* this shouldn't be considered a bribe, it's a gratuity.

ك ر م [2]
كروم *kuruum* /pl n/ **1** grapes. **2** vineyards.

ك ر م [3] see ك ر ى م : *kireem, kiriim, kireema*

ك ر م ا ن
كرمان *kirmaan* /n/ woollen carpet characterized by red colour and geometric pattern.

ك ر م ب
كرنب *kurumb* /coll n/ cabbage(s). *kurumb[i] ya-lli tiḥfi [vendor's cry]* cabbage for stuffing!
كرنبة *kurumba* /unit n, pl *-aat*/ a head of cabbage.
كرنبى *kurumbi* /adj invar/ pale green, cabbage-green.

ك ر م ب —
كرمبلين *kirimbiliin* <Engl> /n/ crimplene, a synthetic jersey fabric.

ك ر م ش
كرمش *karmiʃ* **1** /vt/ to wrinkle, crumple. **2** /vi/ to become wrinkled or crumpled. - vn *karmaʃa*; ava/pva *mikarmiʃ*.
اتكرمش *ʃitkarmiʃ* or *ʃikkarmiʃ* /vi/ **1** to become wrink-

led or crumpled. 2 to be wrinkled or crumpled. - ava/iva *mitkarmif*.

ك ر م ل ل
كرملّة *karamilla* <It *caramella*> 1 /coll n/ caramel, toffee. 2 /unit n, pl *-aat*/ a piece of caramel, a toffee.
كرملّاية *karamillaaya* = *karamilla* 2.

ك ر ن see ك ر ى ن: *kiriina*

ك ر ن ب see ك ر م ب

ك ر ن ت – see also ك ر ت ن
كرنتينة *karantiina* <It *quarantena*> /n/ quarantine.

ك ر ن د م
كورندم *kurundum* <Engl> /n/ corundum.

ك ر ن ر
كورنر *kurnar* <Engl> /n pl *-aat, karaanir*/ 1 *[soccer]* 1a corner kick. 1b corner of a soccer pitch. 2 corner of a boxing ring. ‖*ħaṭṭ-u f-kurnar* he cornered him, he put him in an awkward or difficult position.

ك ر ن ك
كرنك *karank* <Engl> /n pl *-aat*/ crank. *ʕilbit il-karank* crankcase. *ʕamuud il-karank* crankshaft.

ك ر ن م –
كرونومتر *kurunumitr* <Fr> /n pl *-aat*/ chronometer.

ك ر ن و ه
كرنوه *kurnuh, kurnooh* <It *corno*> /n pl *-aat*/ *[mus]* 1 French horn; particularized as *kurnuh faransaawi*. 2 cor anglais, English horn; particularized as *kurnuh ʃingiliizi*.

ك ر ن ى ت
كرنيت *kurneet* <Engl> /n/ *[mus]* cornet.

ك ر ن ى ش
كورنيش *kurniif, kurneef* <Fr *corniche*> /n/ 1 road that skirts a river or sea. 2 *[arch]* cornice. – /pl *karaniif*/ 3 frill, ruffle, flounce.

ك ر ن ى ه
كرنيه *karneeh* <Fr *carnet*> /n pl *-aat*/ 1 identity card. 2 membership card.

ك ر ه
كره *kirih, karah (a)* /vt/ to hate, detest. *ʃilli tikrah-u yḥibb-u ʁeer-ak [prov]* what you hate another likes, one man's meat is another man's poison. *ḥibb' w-waari wi-krah wi-daari [prov]* ≈ show your love discreetly, but hide your hate completely. - vn *kurh, karaaha, karahiyya, kuruhiyya*; ava *kaarih*; pva *makruuh*.
كريه *kariih* /adj */ hateful, odious, obnoxious, loathsome.
أكره *ʃakrah'* /el/ more/most hateful, odious etc. *ʃakrah ma ʕalayya* ... the thing I hate most is ....
اتكره *ʃitkarah* or *ʃikkarah* /vi/ to be hated, be detested. - iva *mitkirih*.
انكره *ʃinkarah* = *ʃitkarah*. - iva *minkirih*.
كرّه *karrah* /vt/ to cause to hate. *ʃir-raagil da karrah-ha fig-gawaaz* that man made her hate marriage. - vn *takriih*; ava *mikarrah*.
اتكرّه *ʃitkarrah* or *ʃikkarrah* /vi/ to be made to hate. - iva *mitkarrah*.
أكره *ʃakrah²* /vt/ to force, coerce. *ʃakrah-ni ʕas-sirʔa* he forced me to steal. - vn *ʃikraah*; ava *mukrih*; pva *mukrah*.
إكراه *ʃikraah* /n/ coercion, force. ‖*sirʔa bil-ʃikraah* armed robbery.

ك ر و
كروان *karawaan* /n pl *-aat*/ curlew, any of the various types of shore birds of the genus Numenius.

ك ر و ت
كروت *karwit* /vt/ to do carelessly. *ʃis-sabbaak karwit if-fuyl' w-saab il-ḥanafiyyaat bi-txurr* the plumber did a sloppy job and left the taps leaking. - vn *karwata*; ava/pva *mikarwit*.
اتكروت *ʃitkarwit* or *ʃikkarwit* /vi/ to be done carelessly. - vn *tikarwiit*; ava *mitkarwit*.

ك ر و س –
كرواسان *kurwasaan* <Fr> /n/ croissant.

ك ر و ش
كروش *kuruuf* <Fr *croche*> /n pl *-aat*/ *[mus]* quaver, eighth-note. *dubl' kuruuf* semi-quaver, sixteenth-note.

ك ر و ك ى
كروكى *kuruuki* <Fr *croquis*> /n/ 1 rough sketch. 2 sketch map.

ك ر و م
كروم *kuroom* <Engl> /n/ chrome.

(ك ر و ن)
كراون *kirawin* <Engl> /n/ ***[dent]*** crown or cap of a tooth.
كرونة *kuroona* <It *corona*> /n pl *-aat*/ **1** *[auto]* differential gear. **2** crown or button (of a watch). **3** wreath (of flowers etc.).

ك ر و ه
كروه *karooh* <Fr *carreau*> /n pl *-aat*/ **1** check, square. *qumaaf karohaat* checkered or plaid cloth. **2** shoulder pad (in men's tailoring). — /no pl/ **3** diamond(s) (in cards).

ك ر و ى
كراوية *karawya* /n/ caraway.

ك ر و ى ت
كرويتة *karaweeta, karawiita* <T *kerevet*> /n pl *-aat*/ **1** wooden bench. **2** sofa.

ك ر ى [1]
كرى *kara (i)* /vt/ to rent, hire. *ḫa-nikri ɛarabiyya* we'll rent a car. - vn *kira*; ava *kaari*; pva *makri*.
كرى *kira* /n/ rental fees, rent.
اتكرى *ʃitkara* or *ʃikkara* /vi/ to be rented, be hired. - iva *mitkiri*.
انكرى *ʃinkara* = *ʃitkara*. - iva *minkiri*.

ك ر ى [2] see ك ا ر ى: *kaari*

ك ر ى ر ا
كوريرا *kureera* <It *colera*> /n/ cholera. - also *kuleera*.

ك ر ى ز [1]
كريز *kireez* <T *kiraz*> /coll n/ cherries.
كريزة *kireeza* /unit n, pl *-aat*/ a cherry.
كريزاية *kirezaaya* = *kireeza*.

ك ر ى ز [2]
كريزة *kiriiza* <Fr *crise*> /n pl *-aat*/ outburst. *gat-li kriizit diḫk* I burst out laughing.

ك ر ى ش
كوريشة *kureeʃa* /n/ **1** thin crepe fabric. **2** crepe paper.

(ك ر ى م)
كريم *kireem, kiriim* <Fr *crème*> /n/ **1** cream. *gibna dubl' kreem* double cream cheese. *kireem fantii* whipped cream. **2** /pl *-aat*/ cosmetic cream (for the hair or face). *kireem ʃasaas* foundation cream.

كريمة *kireema* <It *crema*> /n/ **1** (also *kireema labbaani*) cream. **2** white sauce. **3** cream pudding.

ك ر ى ن
كرينة *kiriina* <poss It *crine*> /n/ shredded vegetable fibre (especially palm fibre) used as flock in upholstery.

ك ر ى ه
كريه *kareeh* <Fr *carré*> /n pl *-aat*/ **1** square cut (in hairdressing). **2** four-of-a-kind (in poker).

ك ز ا see ك د ا: *kaza*

ك ز ا ك
كزاك *kazaak* <Fr *casaque*> /n/ shirt worn loose (as opposed to being tucked into the trousers).

ك ز ا ل ك see ز ا: *ka-zaalik*

ك ز ب see ك د ب: *kizib, kizb, kizba, kaazib, kazzaab, kazzib*

ك ز ب ر
كزبرة *kuzbara* (also *kusbara*) /n/ coriander.

ك ز ز [1]
كزّ *kazz' (i)* /vi/ to bite down. *kazz" ɛala ṣubaaɛ-i* he bit down on my finger. *kazz" ɛala ʃasnaan-u* he clenched his teeth. - also *gazz*. - vn *kazz, kazazaan*; ava *kaaziz*.

ك ز ز [2]
كزّ *kazz² (i)* /vi/ **1** to contract, shrink. *ʃil-fustaan kazz* the dress has shrunk. ‖*kazz ɛalayya d-diḫk* I felt I was going to burst out laughing. **2** to feel aversion or distaste. *bi-ykizz' min il-kalaam fil-mawaḍiiɛ if-faxṣiyya* he hates to discuss personal matters. **3** to feel disgusted or revolted. *kazzeet min riiḫit il-ʃakl* I was revolted by the smell of the food. — /vt/ **4** to shrink, contract. *ʃil-mayya kazzit il-fustaan* the water made the dress shrink. ‖*raagil kazz* tightwad, skinflint. - vn *kazz, kazazaan*; ava *kaaziz*.

ك ز ز [3] see ك ز و ز: *kazuuza, kazuuza*

ك ز ك [1]
كزكة *kazaka* <T *kazık*> /n pl *-aat, kazak*/ pole, post (for telephone, telegraph, lighting). - also *ɋazaɋa*.

ك ز ك [2] see ك ز ا ك: *kazaak*

ك ز ل ك [1]
كزلك *kazlak* <T *gezlik*> /n pl *kazaalik*/ small sharp knife used for boning, skinning etc.

ك ز ل ك [2] see ز ا : *ka-zaalik*

ك ز ن see also ك و ز
كزّن *kazzin* /vi/ to put forth ears (of maize). - vn *takziin*; ava *mikazzin*.

ك ز ن و
كازينو *kazinu* (also *kaziinu*) <It *casino*> /n pl *-haat, -waat*/ **1** place of refreshment (often in the open air). **2** night-club.

ك ز و ز
كازوزة *kazuuza, kazuuza* <Gr *gazoza*> /n/ pop. any sweet carbonated beverage. ‖*ḍaaɛ fil-kazuuza* ≈ it went down the drain. - also *ʃazuuza, gazuuza*.

ك ز ى see ك ا ز ى : *kaazi*

ك ز ى ن و see ك ز ن و : *kaziinu*

ك س ا ت ا
كاساتا *kasaata* <It *cassata*> /n/ Neapolitan ice cream.

ك س ب [1]
كسب *kisib (a)* /vt/ **1** to earn (money), make (money). *bi-tiksab kaam fiʃ-ʃahr* how much do you make a month? *ɧ-aruuɧ ʃaʃtaɤal fil-kuweet w-aksab ziyaada ɛan hina xamas marraat* I'm going to work in Kuwait and earn five times what I get here. ‖*kisibna ṣalaat in-nabi* we made nothing out of the deal. **2** to win, gain. *ʃiksab maɛrakt-ak hina l-ʃawwil* win your battle here first. **3** to defeat (in a game). *ʃil-ʃahli ksib-ku talaata ṣifr* the Ahli team defeated you three nil. — /vi/ **4** to make a profit. *beeɛa kasbaana* a profitable sale. - vn *kasb, kisb*; ava *kaasib, kasbaan*.
كسب *kasb* /n/ profit, earnings. *ḍariibit kasb il-ɛamal* tax on earned income.
أكسب *ʃaksab* [1] /el/ more/most profitable.
كسّيب *kassiib* /n pl *kassiiba*/ one who earns good money, man of steady means. *ya baxt-a-ha gawwizit bint-a-ha l-gadaɛ kassiib* what luck! she married her daughter to a good earner.
مكسب *maksab* /n pl *makaasib*/ profit, gain, earning.
اتكسب *ʃitkasab* or *ʃikkasab* /vi/ **1** to be earned. **2** to be won. - iva *mitkisib*.
انكسب *ʃinkasab* = *ʃitkasab*. - iva *minkisib*.

كسّب *kassib* /vt/ **1** to cause to make money. *ʃazmit is-sukkar kassibit-u ktiir* the sugar shortage earned him big profits. ‖*ʃallaah la ykassib-ak* may you never be successful! **2** to cause to win. *kaanit iẓ-ẓuruuf bass illi kassibit-u l-musabɋa* it was only the circumstances that allowed him to win the competition. **3** to cause to be won. *ʃil-kalaam miʃ huwwa lli ykassib il-ɧarb* it isn't talking that will win the war. - vn *taksiib*; ava *mikassib*.
اتكسّب *ʃitkassib* or *ʃikkassib* /vi/ passive of *kassib*. - iva *mitkassib*.
أكسب *ʃaksab* [2] /vt/ to impart to, cause to acquire. *ʃiʃ-ʃuɧuum bi-tiksib il-gild* [1] *raxaawa* tallow makes the leather soft. - vn *ʃiksaab*; ava *muksib*.
مكسب *muksib* [1] /n pl *-aat*/ additive or agent (used to impart a specific quality). *muksibaat ɋawaam* thickening agents (in printing or dyeing). *muksibaat iṭ-ṭaɛm* [1] *wil-loon wir-riiɧa* additives which impart taste, colour and smell (to foods).
اكتسب *ʃiktasab* /vt/ to acquire, gain. *ʃiktasabt il-xibra di fil-maktab* I acquired this skill at the office. - vn *ʃiktisaab*; ava *miktisib, muktasib*; pva *muktasab*.

ك س ب [2]
كسب *kusb* <P *kusb*> /n/ animal fodder made of pressed cotton seed.
كسبة *kusba* /n/ sesame seed pressings (a favourite food of children).

ك س ب [3]
كثبان *kusbaan* /pl n/ dunes.

ك س ب ر see ك ز ب ر : *kusbara*

ك س ت ب –
كستبان *kustibaan* /n pl *-aat*/ **1** thimble. ‖*kustibaan buṣla* compass cap. **2** /pl *kusabiin*/ thimble-shaped plectrum.

ك س ت ت
كسيت *kasitt* <Fr> /n pl *-aat*/ **1** cassette (of film or magnetic tape). **2** cassette tape-recorder or player.

ك س ت ر [1]
كستور *kastuur* <perh Engl *castor*> /n/ cotton flannel, winceyette. *kastuur is-sittaat* or *kastuur sataan* fleecy-backed cotton satin.
كستر *kastar* [1] /vt/ *[text]* to impart a napped surface to, nap. - vn *kastara*; ava/pva *mikastar*.

ك س ت ر ²
كستر *kastar* ² <Engl> /n/ custard, custard powder. - also *kastard(a)*.

ك س ت ر د
كستردة *kastarda* (also *kastard*) <Engl> /n/ custard, custard powder. - also *kastar*.

(ك س ت ل ل)
كستلّة *kastilla* <poss It *castello*> /n pl *-aat*/ **1** tank or body of a primus stove. **2** *[coarse]* arse.
كستلّة *kustilla: zawyit kustilla [eng, carp]* mitre square.

ك س ت ل –
كستلية *kustaleeta, kustuleeta, kustaleeta, kustalitta* <It *costoletta*> /n pl *-aat, -aat*/ cutlet, chop.

ك س ت ن
كستنة *kastana* <perh Gr *kastano*> /n pl *-aat*/ **1** chestnut. **2** stopper.
كستناوى *kistinaawi* /adj/ dark grey (of a horse).

ك س ت ن –
كستنتة *kastanitta* <prob It *castagnetta*> /n pl *-aat*/ castanets.

ك س ت ى ر
كستير *kastiir* <T *küstüre*> /n pl *kasatiir*/ *[carp]* iron, or cutter, of a plane.

ك س ح ¹
كسح *kasaḥ (a)* /vt/ **1a** to sweep, clear out, clear away. *lissa b-yiksaḥu l-ʕalɤaam miṭ-ṭuruq* they're still clearing the roads of mines. **1b** to drain or pump out (a cesspool). **2** to rout, wipe out. *kasaḥt-u fif-faṭarang* I wiped him out in chess. ‖*xaff*ⁱ *kaasiḥ* he came charging in. - vn *kasḥ*; ava *kaasiḥ*; pva *maksuuḥ*.
كسحة *kasḥa*¹ /pl *-aat*/ instance noun of *kasḥ*. *raaḥ fi-kasḥa* he went to hell.
كاسحة *kasḥa*² /n pl *kaasiḥaat*/ sweeper (ship). *kasḥit ʕalɤaam* mine-sweeper. *kasḥit talg* ice-breaker.
كسّاحة *kassaaḥa* /n pl *-aat*/ sweeper (ship). *kassaaḥit ʕalɤaam* mine-sweeper.
اتكسح *ʕitkasaḥ* or *ʕikkasaḥ* /vi/ passive of *kasaḥ*. - iva *mitkisiḥ*.
انكسح *ʕinkasaḥ* = *ʕitkasaḥ*. - iva *minkisiḥ*.
اكتسح *ʕiktasaḥ* /vt/ to dominate. *ʕil-ʕahli ktasaḥ il-malɛab* the Ahli team dominated the field. - vn *ʕiktisaaḥ*; ava *miktisiḥ, muktasiḥ*.

ك س ح ²
كسح *kisiḥ (a)* /vi/ **1** to become crippled. **2** to become bent (of metal). - vn *kasaḥaan, kasḥ*; ava *kasḥaan*.
كساح *kusaaḥ* /n/ rickets.
كسيح *kasiiḥ* /adj pl *kusaḥa*/ crippled.
كسّح *kassaḥ* /vt/ **1** to cripple. **2** to bend (metal). - vn *taksiiḥ*; ava/pva *mikassaḥ*.
تكسيحة *taksiiḥa* /n pl *takasiiḥ*/ angle, bend (in metal).
مكسّح *mikassaḥ* /n */ cripple. ‖*mikassaḥ yugurr*ⁱ *mkassaḥ wi-yquul yalla nitfassaḥ [prov]* one cripple pulls another and says 'Come on! Let's go for an outing!' (of those who disregard their defects or limitations).
اتكسّح *ʕitkassaḥ* or *ʕikkassaḥ* /vi/ **1** to be crippled. **2** to be bent (of metal). - iva *mitkassaḥ*.

ك س د
كسد *kisid (a)* /vi/ to stagnate. *ʕif-fuɤl*ⁱ *kaasid il-yomeen dool* business is slow these days. - vn *kasaad*; ava *kaasid, kasdaan*.
كساد *kasaad* /n/ stagnation, slackness (of business).
كسّد *kassid, kassad* /vt/ to cause to stagnate. - vn *taksiid*; ava/pva *mikassid*.
اتكسّد *ʕitkassid* or *ʕikkassid* /vi/ to become stagnant. - ava *mitkassid*.

ك س ر ¹
كسر *kasar (a)* /vt/ **1** to break, fracture. *fingaan maksuur* a broken cup. *ʕaksar dimaaɤ-ak* I'll break your head! ‖*kasar ir-raqam il-qiyaasi* he broke the record. - *kasar bi-xaaṭir* see *xaaṭir*. - *kasar ɛeen(-u)* (1) to lower the eyelids. (2) to buy (s.o.) off, as in *ḥa-tiksar ɛeen-i b-xadwa* do you think you can buy me off with a lunch invitation? - *kasar in-naḥs* to break the (run of) bad luck. - *kasar il-ʕifaara* to shoot (or run) the traffic-light. - *kaṣar waraa ɋulla* (he broke a pitcher behind him) he said good riddance to him. - *kaṣar ḥiddit* to take the edge off, as in *ʕid-dawa kasar ḥiddit il-wagaɛ* the medication numbed the pain. - *maksuur il-ginaaḥ* helpless, in need of protection. - *nifs-u maksuura* he is downcast. - *ʕiksar if-farr* let's avoid ill-feeling (by argument \etc.). **2** to break open, force entry into. *ʕil-maṭaafi kasaru f-faqqa* the firemen broke into the apartment. **3** to lower (a flag or the like). *ʕis-ṣawwaaq kasar il-bundeera* the driver flipped the meter-flag over. **4** to cut (front teeth, of animals). — /vi/ **5** to break (in billiards or pool). **6** to veer, swerve. *sawwaaq ḥumaar kasar ɛalayya fif-faariɛ* an ass of a driver swerved in front of me in the street. **7** *[mus]* to lose the beat. - vn *kasr, kasr*; ava *kaasir*; pva *maksuur, maksuur*.

كسر *kasr* /n pl *kusuur*/ **1** breakage(s), damage(s). *nisba mil-xidma mixaṣṣaṣa lil-kasr* a percentage of the service charge allotted for breakage. **2** fracture. *ʕil-migabbaraati yʕaalig il-kusuur* the bonesetter treats fractures. **3** *[geol]* fault. **4** fraction. *ʕil-kusuur il-iʕtiyadiyya* common fractions. *ʕil-kusuur il-ʕaʃriyya* decimal fractions. *nuṣṣ[1] saaʕa w-kusuur* half an hour and then some. *yitkallif gineeh wi-kusuur* it costs a little over a pound. **5** *[slang]* fifty-piastre note. — /adj invar/ **6** fragmented, scrap. *xaʃab kasr* wood chips. *ţuub kasr* broken brick. *dahab kasr* gold scrap.

كسرة *kasra, kasra[2]* /n pl *-aat, kusar*/ **1** /inst n/ a break, a fracture. **2** break, indentation. **3** crease. **4** dart, tuck (in dressmaking). — /pl *-aat* only/ **5** *[gram]* vowel sign for short *i* (in Arabic writing).

كسرة *kisra[1]* /n pl *kisar, kisraat*/ fragment, small piece. *kisrit ʕeeʃ* a crumb of bread.

كسارة *kusaara* /coll n, pl *-aat*/ chips.

كسور *kasuur* /adj/ fragile.

كسورة *kasuura: loola k-kasuura ma-kaanit il-faxuura* see *faxuura*.

كسير *kasiir*↑ /adj/ shattered, defeated. *kasiir il-ʔalb* broken-hearted.

كسّارة *kassaara* /n pl *-aat*/ any implement used for breaking. ‖ *kassaarit bunduʔ* nutcracker.

مكسر *maksar: (baţţiix) ʕala l-maksar* (water-melon) sold after being cut open in order to reveal its ripeness. *ya baţţiix ya-lli ʕala l-maksar [vendor's cry]* guaranteed-ripe water-melon!

اتكسر *ʔitkasar* or *ʔikkasar* /vi/ passive of *kasar*. - iva *mitkisir*.

انكسر *ʔinkasar* = *ʔitkasar*. - iva *minkisir*.

منكسر *minkisir* /adj */ down-trodden. *rabb-i-na maʕa l-minkisriin (gaabir) [prov]* God is with the down-trodden.

كسّر *kassar* /vt/ **1** to break into pieces, smash to bits. *ʔakassar il-ʕaḍm[i] bis-saţuur* I break up the bones with the cleaver. *bi-ykassar guzʔ[i] minnu b-dinamiit* he blows off part of it with dynamite. ‖ *kassart[i] dmaaɣ-i* you've driven me up the wall! - *kassar maʔadiif(-u)* ≈ to take the wind out of (s.o.'s) sails. - *kassar kalaam(-u)* to disobey (s.o.). **2** to break (down). *tikassar-li l-gineeh da min faḍl-ak* would you give me change for this pound note, please! **3** to crease, crumple. *ʔif-fanţa kassarit il-huduum* the suitcase crumpled the clothes. **4** to copulate with, impregnate (of a male domestic fowl). - vn *taksiir*; ava/pva *mikassar*.

مكسّرات *mikassaraat* /pl n/ nuts (usually almonds, walnuts and hazelnuts) and raisins etc.

اتكسّر *ʔitkassar* or *ʔikkassar* /vi/ **1** to be broken into pieces, be smashed. **2** to shatter, break into pieces. *ʔil-ʔizaaz itkassar* the glass shattered. **3** to be or become tired out. *riglay-ya tkassarit* my legs have given out. *muxx-i tkassar* my brain is worn out. - ava/iva *mitkassar*.

كاسر *kaasir* /vt/ **1** to jostle, push and elbow. *bi-yuʔaf fil-ʔutubiis yikaasir (in-naas) wi-yzaaḥim* he stands in the bus jostling (people) and shoving. ‖ *ʔil-ʕarabiyya kasrit-ni* the car cut in and hit me. **2** to play at Indian wrestling with. - vn *mikasra*; ava *mikaasir*.

ك س ر [2] see ك ت ر : *kasra[1]*

ك س ر ا

كِسرى *kisra[2]* /prop n/ Chosroes. *law ʕandi maal kisra ma-kaffa* if I had Chosroes' wealth it would not be enough.

ك س ر ل ل

كسرولّة *kasarulla* <It *casseruola*> /n pl *-aat*/ saucepan.

ك س ر و ن

كسرونة *kasaroona* = *kasarulla*.

ك س س

كسّ *kuss* /n pl *ʔiksaas, kusuus, ʔaksaas*/ *[coarse]* cunt. *kuss umm-ak* (up) your mother's cunt!

كسّيس *kassiis* /n pl *kassiisa*/ *[coarse slang]* arse-kisser, brown-noser.

كسّس *kassis* /vi/ *[coarse]* to kiss arse, brown-nose. *ʔaxii-na da dayman bi-ykassis lil-mudiir* our friend there is always brown-nosing the director. - vn *taksiis*; ava *mikassis*.

مكسّساتي *mikassisaati* /n pl *-yya*/ *[coarse]* arse-kisser, brown-noser.

اتكسّس *ʔitkassis* or *ʔikkassis* /vi/ (impersonal) passive of *kassis*. *mitkassis luhum* they're much fawned on. - iva *mitkassis*.

ك س ع م

كسعم *kasʕam* /vt/ to demolish, wipe the floor with. *ʔiskut walla ʔakasʕam-ak* shut up or I'll flatten you! - vn *kasʕama*; ava/pva *mikasʕam*.

اتكسعم *ʔitkasʕam* or *ʔikkasʕam* /vi/ passive of *kasʕam*. - iva *mitkasʕam*.

ك س ف [1]

كسف *kasaf (i)* /vt/ **1** to shame, make ashamed. ‖ *ʔallaah yiksif-ak* you should be ashamed, shame on

you! 2 to embarrass. 3 to cause to be shy. - vn *kasafaan, kasf, kusuuf*; ava *kaasif*; pva *maksuuf*.
كسفة *kasfa* /n pl *-aat*/ 1 instance noun of *kasf*. 2 sharp reply, rebuff, brush-off.
كسوف *kusuuf* /n/ eclipse. *kusuuf if-fams* solar eclipse.
اتكسف *ʔitkasaf* or *ʔikkasaf* /vi/ 1 to be or become ashamed. 2 to be or become embarrassed. 3 to become shy. - ava/iva *mitkisif*.
انكسف *ʔinkasaf* = *ʔitkasaf*. - ava/iva *minkisif*.

ك س ف ²
كثافة *kasaafa* /n/ density. *ʔil-kasaafa s-sukkaniyya* population density.
كثيف *kasiif* /adj/ dense, thick.
كسّف، كثّف *kassif* /vt/ 1 *[chem, phys]* to condense. 2 *[phot]* to apply a double-fixing process to (film). - vn *taksiif*; ava/pva *mikassif*.
مكثّف *mukassif* /n pl *-aat*/ condenser.
اتكسّف، اتكثّف *ʔitkassif* or *ʔikkassif* /vi/ passive of *kassif*. - iva *mitkassif*.
تكثّف *takassuf* /n/ condensation.

ك س ك ت ت
كسكيتّة *kaskitta* <Fr *casquette*> /n pl *-aat*/ cap with a peak.

ك س ك س ¹
كسكس *kaskis* 1 /vt/ to back (up) (usually an animal or vehicle). 2 /vi/ to move backwards, back up (usually of an animal or vehicle). - vn *kaskasa*; ava/pva *mikaskis*.
اتكسكس *ʔitkaskis* or *ʔikkaskis* /vi/ to be backed up, be moved backwards. - iva *mitkaskis*.

ك س ك س ²
كسكسى *kuskusi* /n/ couscous, dish based (in Egypt) on granules of steamed dough.

ك س ل
كسل *kisil (a)* /vi/ to behave lazily. *bi-yiksal ʕan kull[a] ħaaga* he's too lazy for anything. - vn *kasal*; ava *kaslaan*.
كسل *kasal* /n/ laziness, sloth.
كسلان *kaslaan* /adj pl *-iin, kasaalaʔ*/ lazy, sluggish. *ma-tibqaa-ʃ kaslaan* don't be lazy. *kibd-i kaslaan* my liver is sluggish. ‖*fatlit ik-kaslaana* overlong thread (in sewing).
كسلى *kusali* or *kisali* /adj * and pl *kusaliyya*/ lazy, slothful, indolent.
أكسل *ʔaksal* /el/ more/most lazy, sluggish etc.
كسول *kasuul* /adj * and pl *-kasaala*/ lazy, indolent.
كسّل *kassil* 1 /vt/ to make lazy. *kassilt-i-ni ʕan is-safar* you've made me feel that it's too much effort to go away. 2 /vi/ to let things slide, make no effort to do anything. *kaan ʕandi fuxl[i] ktiir laakin kassilt* I had a lot of work to do but couldn't bring myself to make the effort. - vn *taksiil*; ava/pva *mikassil*.
اتكاسل *ʔitkaasil* or *ʔikkaasil* /vi/ to act lazily. *lamma ykuunu mif ʕayziin yiʕmilu fuxla yitkaslu* when they don't want to do a job, they slack. - vn *takaasul*ʔ; ava *mitkaasil*.

ك س ل ك
كثلكة *kaslaka* /n/ Catholicism, Catholic practice.
كاثوليك *kasuliik* /coll n/ Catholics. - also *katuliik*.
كاثوليكى *kasuliiki* 1 /adj/ Catholic. 2 /n pl *kasuliik*/ a Catholic. - also *katuliiki*.
الكاثوليكيّة *ʔil-kasulikiyya* /n/ Catholicism.
اتكثلك *ʔitkaslik* or *ʔikkaslik* /vi/ to convert to Catholicism, become Catholic. - ava *mitkaslik*.

ك س ل ك –
الكاثوليكون *ʔil-kasulikuun* <Gr *ḳatholikôn*> /n/ *[Chr]* the Catholic Epistle(s).

ك س م
كسم *kasm* <T *kesim*> /n/ shape, form, appearance.
كسمة *kasma* /n/ fit (of a garment).
كسّم *kassim* /vt/ to fit (an item of clothing) to the form. *fustaan mikassim* a well-fitted dress. - vn *taksiim*; ava/pva *mikassim*.
اتكسّم *ʔitkassim* or *ʔikkassim* /vi/ passive of *kassim*. - iva *mitkassim*.

ك ش و see ك س ى : *kiswa*

ك س ى
كسى *kasa (i)* /vt/ 1 to clothe, provide with clothing. *ma-fii-ʃ filuus ʔaksi wlaad-i* I have no money to clothe my children. *rabb-i-na kasii-ha b-gamaal-u* God has clothed her in beauty. 2a to cover (usually with cloth). 2b to upholster. - vn *kisa, kasayaan*; ava *kaasi*; pva *maksi*.
كسوة *kiswa* /n pl *kasaawi*/ 1 clothing, wear. *kiswit iṣ-ṣeef* summer wear. 2 covering. *kiswit il-kaʕba* the black embroidered canopy which covers the Kaaba.
اتكسى *ʔitkasa* or *ʔikkasa* /vi/ 1 to be clothed. 2a to be covered (usually with cloth). 2b to be upholstered. - iva *mitkisi*.
انكسى *ʔinkasa* = *ʔitkasa*.[1] - iva *minkisi*.

ك ش ح
كشح *kaʃaħ (a)* /vt/ 1 to scrape away, remove by scrap-

ing. *ʃikʃaḥ-ha b-sikkiina* scrape it off with a knife. **2** *[slang]* to drive away, chase away. - vn *kaʃḥ, kaʃaḥaan*; ava *kaaʃiḥ*; pva *makfuuḥ*.

انكشح *ʃinkaʃaḥ* /vi/ **1** to be scraped away, be removed by scraping. **2** *[slang]* **2a** to push off, bugger off. ‖ *ʃinkiʃiḥ fi-daḥya min sikkit-i* get the hell out of my way! **2b** to be driven away, be chased away. **3** *[slang]* to pop off, kick the bucket. - ava/iva *minkiʃiḥ*.

اتكشح *ʃitkaʃaḥ* or *ʃikkaʃaḥ* = *ʃinkaʃaḥ*. - ava/iva *mitkiʃiḥ*.

ك ش د see ك ش ى د : *kaʃiida*

ك ش ر

كشر *kiʃir* /adj */ grim-faced, beetle-browed, frowning.

أكشر *ʔakʃar* **1** /el/ more/most grim-faced etc. **2** /adj fem *kaʃra*/ grim-faced.

كشّر *kaʃʃar* /vi/ to frown, scowl, knit one's brows. *laazim tidḥak miʃ tikaʃʃar* you should laugh not scowl. - vn *takʃiir*; ava *mikaʃʃar*.

اتكشّر *ʃitkaʃʃar* or *ʃikkaʃʃar* /vi/ (impersonal) passive of *kaʃʃar*. *ma-yṣaḥḥ-ʃ yitkaʃʃar lil-ʕiyaal ʕaṣ-ṣubḥ* one shouldn't frown at the children first thing in the morning. - iva *mitkaʃʃar*.

ك ش ر ى

كشرى *kuʃari* <Hindi *khichrī*> /n/ dish of rice, lentils, and sometimes macaroni topped with fried onions and hot sauce. ‖ *ḥaʃiiʃ kuʃari* mixture of tobacco and powdered hashish. - *ʃaay kuʃari* drink of tea made in a glass by adding water to the leaves.

ك ش ش [1]

كشّ *kaʃʃ[1] (i)* /vi/ **1** to shrink, *law yitɣsil bi-mayya suxna ykiʃʃ* if it is washed in hot water it will shrink. **2** to shrink, draw back. *bi-tkiʃʃ[i] minni leeh* why do you shrink from me? ‖ *kaʃʃ[i] f-gild-u* he was scared stiff. - *kiʃʃ* (1) keep to the limits of decency! (2) shoo! (to a dog). - vn *kaʃʃ, kiʃʃiyya, kaʃaʃaan*; ava *kaaʃif*.

¶ *kaʃʃ[i] fi-* to snap at, burst out at.

كشّة *kaʃʃa* /pl -*aat*/ instance noun of *kaʃʃ*.

كشّاش *kaʃʃaaʃ* /adj */ timid, cowardly.

اتكشّ *ʃitkaʃʃ[1]* or *ʃikkaʃʃ[1]* /vi/ (impersonal) passive of *kaʃʃ[1]*. *ʃitkaʃʃ[i] fiiha* she was snapped at. - iva *mitkaʃʃ*.

انكشّ *ʃinkaʃʃ[1]* = *ʃitkaʃʃ[1]*. - iva *minkaʃʃ*.

كشّش *kaʃʃiʃ[1]* /vt/ to cause to shrink. - vn *takʃiiʃ*; ava/pva *mikaʃʃiʃ*.

اتكشّش *ʃitkaʃʃiʃ[1]* or *ʃikkaʃʃiʃ[1]* /vi/ passive of *kaʃʃiʃ[1]*. - iva *mitkaʃʃiʃ*.

ك ش ش [2]

كشّ *kiʃʃ* <P *kish*> (also *kiʃʃ[i] malik*) /interj/ **1** check! (in chess). **2** *[slang]* behave yourself!

كشّ *kaʃʃ[2] (i)* /vt/ *[chess]* to put (a king) into check. - vn *kaʃʃ, kaʃaʃaan*; ava *kaaʃiʃ*; pva *makfuuʃ*.

اتكشّ *ʃitkaʃʃ[2]* or *ʃikkaʃʃ[2]* /vi/ passive of *kaʃʃ[2]*. - iva *mitkaʃʃ*.

انكشّ *ʃinkaʃʃ[2]* = *ʃitkaʃʃ[2]*. - iva *minkaʃʃ*.

كشّش *kaʃʃiʃ[2]* /vt/ *[chess]* to put (a king) into check. - vn *takʃiiʃ*; ava/pva *mikaʃʃiʃ*.

اتكشّش *ʃitkaʃʃiʃ[2]* or *ʃikkaʃʃiʃ[2]* /vi/ passive of *kaʃʃiʃ[2]*. - iva *mitkaʃʃiʃ*.

ك ش ط

كشط *kaʃaṭ (u)* /vt/ **1** to scrape, scrape clean. *kaʃaṭt il-barkeeh wi-ʃiddeetu blastik* I scraped the parquet floor clean and gave it a plastic surface. **2** to scrape off, scratch off. *ʃayy[i] kaʃṭ[i] fiʃ-ʃiik yilɣii* any scratching-out on the cheque will invalidate it. - vn *kaʃṭ*; ava *kaaʃiṭ*; pva *makʃuuṭ*.

كشّاطة *kaʃʃaaṭa* /n pl -*aat*/ scraper.

مكشط *makʃaṭ* /n pl *makaaʃiṭ*/ whittling knife.

اتكشط *ʃitkaʃaṭ* or *ʃikkaʃaṭ* /vi/ **1** to be scraped, be scraped clean. **2** to be scraped off, be scratched off. - iva *mitkiʃiṭ*.

انكشط *ʃinkaʃaṭ* = *ʃitkaʃaṭ*. - iva *minkiʃiṭ*.

ك ش ط و ر

كشطورة *kaʃṭuura* <It *costura*> /n pl -*aat*/ patch (of cloth, leather, plastic, and the like).

ك ش ف

كشف *kaʃaf (i)* /vt/ **1** to expose, uncover. *kaʃaf il-kizaan liʃ-ʃams[a] ʕaʃaan tinʃaf* he put the corn cobs in the sun to dry. *ʃikʃiʃii ʕaʃaan ʃaʃuuf il-garḥ* uncover him so that I can see the wound. *kaʃafna ɣalṭit-u* we exposed his mistake. ‖ *kaʃaft-ak* I've found you out, I've got your number! - *wiʃʃ-u makfuuf* he's shameless. - *liʕba makfuufa* an obvious trick. - *ʕala l-makfuuf* openly, frankly, as in *xallii-na nitkallim ʕala l-makfuuf* let's speak frankly. **2** to remove (a covering). *ʃikʃif is-sitaara ʕan iʃ-ʃibbaak* pull the curtain away from the window. ‖ *raagil makfuuf ʕannu l-ḥigaab* a man who can read the unknown. — /vi/ **3a** to make an investigation. *bi-yikʃifu ʕan il-bitrool* they are looking for oil. *kaʃaft[a] ʕala l-ʕarabiyya min guwwa* I inspected the inside of the car. *ʃid-duktuur kaʃaf ʕalayya* the doctor examined me. **3b** to subject oneself to a medical examination. *ʔabl[i] ma safirt[i] ruḥt[i] kaʃaft* before I travelled, I went and

had a medical examination. - vn *kaʃʃ, kaʃafaan*; ava *kaaʃif*; pva *makʃuuf*.

كشف *kaʃʃ* **1** /vn/ ‖*gazma kaʃʃ* slip-on shoe. - *faarit kaʃʃ [carp]* jack plane. — /n pl *kuʃuuf*/ **2** discovery. **3** (first) medical examination (at which a doctor makes a diagnosis and prescribes treatment - as opposed to a progress check). — /also pl *kuʃufaat*/ **4** list, register. *kaʃʃ ḥsaab* bill, invoice, list of expenditures. *kuʃufaat il-murattabaat* payroll. **5** *[mus]* upper register.

كشفة *kaʃʃa* /n pl -*aat*/ **1** instance noun of *kaʃʃ*. **2** discovery.

كاشف *kaaʃif*[1] /n pl *kuʃʃaaf*/ *[obsol]* provincial governor.

كشّاف *kaʃʃaaf* /n pl -*aat*/ **1** spotlight, searchlight. *kaʃʃaaf ɛarabiyya* car headlight. **2** list. *kaʃʃaaf higaaʕi* an alphabetical list. — /pl *kaʃʃaafa*/ **3** scout. — /pl -*iin*/ **4** inspector. *kaʃʃaaf nuur* electricity meter reader. *kaʃʃaaf gumruk* customs inspector.

الكشّافة *ʕik-kaʃʃaafa* /n/ the Boy Scout Organization.

اتكشف *ʕitkaʃaf* or *ʕikkaʃaf* /vi/ passive of *kaʃaf*. - iva *mitkiʃif*.

انكشف *ʕinkaʃaf* = *ʕitkaʃaf*. - iva *minkiʃif*.

كاشف *kaaʃif*[2] /vt/ to speak plainly to (s.o.), put (s.o.) in the picture. *yiṣaḥḥ*[i] *tkaaʃif ʕaxuu-k bil-mawḍuuɛ qabl*[i] *ma yismaɛ bii min barra* you'd better let your brother in on the matter before he hears about it from an outsider. - vn *mikaʃʃa, mukaʃʃa*; ava *mikaaʃif*.

اتكاشف *ʕitkaaʃif* or *ʕikkaaʃif* /vi/ passive of *kaaʃif*[2]. - iva *mitkaaʃif*.

اكتشف *ʕiktaʃaf* /vt/ to discover. *ʕiktaʃafu maqbara firɛoniyya* they discovered a Pharaonic tomb. *baɛd*[i] *mudda ktaʃaft inni ɣalṭaan* after a while I discovered that I was mistaken. - vn *ʕiktiʃaaf*; ava *miktiʃif, muktaʃif*; pva *muktaʃaf*.

استكشف *ʕistakʃif* /vi/ to explore, reconnoitre. - vn *ʕistikʃaaf*; ava *mistakʃif*.

مستكشف *mustakʃif* /n */ explorer.

[1] ك ش ك

كشك *kuʃk*[1] /n/ elongated swirl of feathers found on the breasts of pigeons of certain breeds.

كشك *kuʃuk* /adj/ having a *kuʃk* (of a pigeon).

كشكى *kuʃki* /n pl *kuʃkaat*/ pigeon having a *kuʃk*.

[2] (ك ش ك)

كشك *kiʃk* <P *kashk*> /n/ **1** dish of a creamy consistency based on chicken stock thickened with milk or yoghurt and flour. ‖*huwwa farxa b-kiʃk*[a] *ɛand il-mudiir* he's the boss's pet. *ḥaaga farxa b-kiʃk*[a] *ɛandi* something I really like. **2** /coll n/ small round cakes made of crushed green wheat, salt and sour milk and dried hard to be eaten either uncooked or stewed in a stock as 1.

كشك *kuʃk*[2] (also *kuʃuk [rur]*) <T *köşk*> /n pl *kiʃaak, ʕikʃaak, ʕakʃaak*/ **1** kiosk. **2** any small wooden hut (e.g., kennel, sentry-box, signal-box). **3** metal stand or oven placed over fire on which a *makwagi* heats his irons.

ك ش ك ا ر

كشكار *kuʃkaar, kiʃkaar* /n/ coarsest grade of flour. *kiʃkaar daayim wala ɛalaama maqṭuuɛa [prov]* better continuing coarse flour than intermittent fine flour.

ك ش ك ش

كشكش *kaʃkiʃ* /vt/ **1** to gather (cloth). **2** /vi/ to be gathered, smocked, pleated etc. (of cloth). - vn *kaʃkaʃa*; ava/pva *mikaʃkiʃ*.

اتكشكش *ʕitkaʃkiʃ* or *ʕikkaʃkiʃ* /vi/ to be gathered. - iva *mitkaʃkiʃ*.

ك ش ك ل –

كشك الماز، كشك الماظ *kiʃkalmaaz* <T *kuşkonmaz*> /n/ asparagus.

ك ش ك و ل

كشكول *kaʃkuul* <P *kashkûl*> /n pl *kaʃakiil*/ **1** thick copybook, thick exercise book. **2** scrapbook. ‖*kaʃkuul maɛlumaat* a grab-bag of information.

ك ش م ى ر

كشمير *kaʃmiir* <Engl> /n/ **1** cashmere (wool). **2** leaf design typical of paisley pattern (used on cloth and wood carving). — /adj invar/ **3** decorated with a paisley pattern.

ك ش ى د

كشيدة *kaʃiida* <T *keşide*> /n/ *[callig]* lengthening line between two letters.

ك ش ى ه

كوشيه *kuʃeeh* <Fr *couché*>: *waraq kuʃeeh* art paper, coated paper.

ك ط ط

كتّ، كطّ *kaṭṭ* <prob Engl *cut*> /adj invar/ **1** short. *kumm*[i] *kaṭṭ* short sleeve. *faraab kaṭṭ* ankle-length socks. **2** sleeveless (of a dress). *fustaan kaṭṭ* a sleeveless dress. *hiyya labsa kaṭṭ* she's wearing a sleeveless dress.

ك ظ ظ

اكتظّ ʕiktaẓẓ /vi/ to become packed to capacity. -vn ʕiktiẓaaẓ; ava *miktaẓẓ*.

اكتظاظ ʕiktiẓaaẓ /n/ overcrowding.

مكتظّ *miktaẓẓ* /adj/ overcrowded, jam-packed.

ك ع ب

كعب *kaʕb* /n pl *kuʕuub, kiʕaab, kuʕúba*↓/ **1a** heel (of a foot). ‖*kaʕb*^{i} *daayir* a ubiquitous person. -*farkit kaʕb* just a step, a stone's throw. **1b** heel (of a shoe). *hiyya labsa kaʕb* she's wearing (high) heels. ‖*kaʕb*^{i} *ʕaali* a woman, as in *ḫaasib ya ʕusṭa fii kaʕb*^{i} *ʕaali* watch it, driver! there's a skirt getting on (or off)! **1c** spur (of a chicken's foot). ‖*miṭʕallim il-kaʕb*^{i} *wil-xanṣar* he's been around, he wasn't born yesterday. **1d** object resembling a heel in function or position. *kaʕb*^{i} *ʕaṣaaya* ferrule. *kaʕb*^{i} *ktaab* spine of a book. **2** end, bottom. *kaʕb*^{i} *muxṭaaf* anchor crown. *kaʕb*^{i} *ṣafḥa* bottom of a page. *kaʕb*^{i} *il-ʕiyaas* the end of the mat. **3** official stub, duplicate in brief. *ʕil-kuʕuub bitaaʕit if-fikaat* cheque stubs. *kaʕb*^{i} *ḫwaala* stub of a money order, used as a receipt. *kaʕb*^{a} *ʕamal* stub from the government employment office, acknowledging receipt of an application for work. — /pl *kuʕuub* only/ **4** corner motif in tent appliqué work (see Pl.H, 20).

الكعبة ʕil-kaʕba /prop n/ the Kaaba, the shrine in Mecca to which Muslims perform the pilgrimage and towards which all Muslim prayers are directed.

كعيب *kuʕeeb: ʕabu kʕeeb* mumps.

كعّابي *kaʕʕaabi* /adv/ on foot. *ɣadt-a-ha kaʕʕaabi* I went by shanks' pony.

كعّب *kaʕʕab* /vt/ **1** to cube (a number etc.). *mitr*^{i} *mkaʕʕab* cubic metre. **2** to determine the cubic measurement of. *kaʕʕabu l-beet* they took the cubic measurement of the house. -vn *takʕiib*; ava/pva *mikaʕʕab*.

تكعيبة *takʕiiba* /n pl *-aat*/ trellis, espalier.

تكعيبي *takʕiibi* /adj/ cubic. *gizr*^{i} *takʕiibi* cube root. ‖*fann*^{i} *takʕiibi* Cubist art.

التكعيبيّة ʕit-takʕibiyya /n/ *[art]* Cubism.

مكعّب *mukaʕʕab, mikaʕʕab* **1** /adj/ cubic. **2** /n pl *-aat*/ cube.

اتكعّب ʕitkaʕʕab or ʕikkaʕʕab /vi/ passive of *kaʕʕab*. -iva *mitkaʕʕab*.

ك ع ب ر

كعبر *kaʕbar* (also *kaʕwar*) **1** /vt/ to wad, form into a shapeless lump. *kull*^{i} *m-àktib waraqa ʕakaʕbar-ha w-ʕarmii-ha* every time I write a page I screw it up and throw it away. **2** /vi/ to grow podgy or dumpy. -vn *kaʕbara*; ava/pva *mikaʕbar*.

مكعبر *mikaʕbar* (also *mikaʕwar*) /adj */ bulging, bulbous, lumpy. *ʃakl-a-ha mkaʕbar* she has a dumpy figure. ‖*ʕaaʕid mikaʕbar* sitting all hunched up.

اتكعبر ʕitkaʕbar or ʕikkaʕbar (also *ʕitkaʕwar, ʕikkaʕwar*) /vi/ to be wadded, be formed into a lump. -iva *mitkaʕbar*.

ك ع ب ش

كعبش *kaʕbiʃ* /vt/ **1** to crumple, rumple. *ʃif-fanṭa kaʕbiʃit huduum-i* the suitcase crumpled my clothes. **2** to cramp (the fingers). -vn *kaʕbaʃa*; ava/pva *mikaʕbiʃ*.

اتكعبش ʕitkaʕbiʃ or ʕikkaʕbiʃ /vi/ **1** to become crumpled, become rumpled. **2** to become cramped (of fingers). -ava/iva *mitkaʕbiʃ*.

ك ع ب ل

كعبل *kaʕbil* /vt/ **1** to cause to stumble, trip. *ʃil-ḫabl*^{i} *kaʕbil-ni* the rope tripped me up. **2** to tangle. *xeeṭ mikaʕbil fi-baʕḍ-u* a tangled thread. -vn *kaʕbala*; ava/pva *mikaʕbil*.

اتكعبل ʕitkaʕbil or ʕikkaʕbil /vi/ **1** to stumble, trip. *min laxmit-u tkaʕbil fil-baab* because of his confusion he stumbled at the door. ‖*ʕaliil il-baxt yitkaʕbil fis-sideeri* (or *fi-bḍaan-u*) *[prov]* an unlucky man will trip over his waistcoat (or his balls). **2** to become entangled. -vn *kaʕbala*; ava *mitkaʕbil*.

ك ع ع

كعّ *kaʕʕ (u)* /vt/ to pay up, cough up, fork out. ‖*kaʕʕeet damm*^{i} *ʕalb-i* or *kaʕʕeet ig-gild*^{i} *wis-saʕt* I paid through the nose. -vn *kaʕʕ*; ava *kaaʕiʕ*.

اتكعّ ʕitkaʕʕ or ʕikkaʕʕ /vi/ passive of *kaʕʕ*. -iva *mitkaʕʕ*.

انكعّ ʕinkaʕʕ = ʕitkaʕʕ. -iva *minkaʕʕ*.

كعّع *kaʕʕaʕ* /vt/ to cause (s.o.) to pay out. *kaʕʕaʕt-u ʕaʃara gneeh* I made him cough up ten pounds. -vn *takʕiiʕ*; ava *mikaʕʕaʕ*.

اتكعّع ʕitkaʕʕaʕ or ʕikkaʕʕaʕ /vi/ to be caused to vomit. -iva *mitkaʕʕaʕ*.

ك ع ك

كعك *kaʕk*↑ = *kaḫk*.

ك ع ك و

كعكو *kaʕku* /n/ style of serving in the game of *xara* (q.v.). -also *kaḫku*.

ك ع ك و ع
كعكوعة *kaʕkuuʕa* /n pl *kaʕakiiʕ*/ knee (of a camel).

ك ع م ش
كعمش *kaʕmiʃ* /vt/ to crumple, rumple. *huduum mikaʕmiʃa* crumpled clothes. - vn *kaʕmaʃa*; ava/pva *mikaʕmiʃ*.
اتكعمش *ʔitkaʕmiʃ* or *ʔikkaʕmiʃ* /vi/ to become crumpled, become rumpled. - ava *mitkaʕmiʃ*.

ك ع و ر see ك ع ب ر: *kaʕwar, mikaʕwar, ʔitkaʕwar, ʔikkaʕwar*

ك ف ء [1]
كفاءة *kafaaʔaʔ* /n/ **1** competence. *xibrit-ha ʔaksabit-ha kafaaʔa fil-magal-da* her experience has given her competence in this field. **2** efficiency. *ʔil-kafaaʔa l-ʔintagiyya* efficiency of production. *ʔiṭ-ṭuub il-ʔaḥmar luu kafaaʔa ʕalya f-ʕazl il-ḥaraara* red brick is a highly efficient heat insulator.
كفء *kufʔ* /adj pl *ʔakfaaʔ*/ efficient, capable. *ḥaaga ʔakuun miʃ kufʔ[i] liiha* something I'm not up to doing.
أكفأ *ʔakfaʔ* /el/ more/most efficient or capable.
كافأ *kaafiʔ* /vt/ to reward. *kafiʔ-ni b-ʕalʔa* he rewarded me with a beating. - vn *mikafʔa, mukafʔa*; ava *mikaafiʔ, mukaafiʔ*; pva *mukaafaʔ*.
مكافأة *mukafʔa* /n pl -*aat*/ reward, bonus. *mukafʔaat taʃgiʕiyya* incentive payments. ‖ *bi-yiʃtaɣalu b-mukafʔa* they work on a lump payment basis.
مكافئ *mukaafiʔ* /adj/ *[chem]* equivalent. *wazn[i] mukaafiʔ* equivalent weight.
تكافؤ *takaafuʔ* /n/ equivalence, evenness, parity. *mubaraah ma-f-haa-ʃ takaafuʔ* an unevenly matched football game. *takaafuʔ il-furaṣ* equal opportunities for all.

ك ف ء [2] see ك ف ى [2]

ك ف ت [1]
كفت *kuft* /n/ membrane between the white and the shell of an egg. ‖ *bi-yiʕraf ik-kuft* he knows everything, he's very clever. - *ʕayyiʃ ʕak-kuft* spending nothing on oneself, living on a shoestring.
كفّت *kaffit* /vt/ to inlay (with metal). - vn *takfiit*; ava/pva *mikaffit*.

ك ف ت [2]
كفتة *kufta* <T *köfte*> **1** /n/ dish of (spiced) minced meat, fish or chicken shaped into patties (or around a skewer) and cooked. **2** /adj invar/ worthless. *raagil kufta* a worthless man.

ك ف ت ر –
كفتيريا *kafitirya, kafatirya* <Engl> /n pl -*aat*/ **1** cafeteria. **2** coffee-shop.

ك ف ح
كفاح *kifaaḥ* /n/ struggle, effort.
كافح *kaafiḥ* /vt/ to struggle against, combat. *mukafḥit il-ʔummiyya* illiteracy programme. - vn *mikafḥa, mukafḥa*; ava *mikaafiḥ*.
اتكافح *ʔitkaafiḥ* or *ʔikkaafiḥ* /vi/ passive of *kaafiḥ*. - iva *mitkaafiḥ*.

ك ف ر [1]
كفر *kafar[1], kifir, kufur (a)* /vi/ **1** to deny God's existence, blaspheme. ‖ *huwwa-ḥna kafarna lli skinna ʕandak* ≈ did we do something wrong in coming to stay with you? **2** to become fed up. *kafart[i] min iʃ-ʃuɣl* I became sick and tired of the work. ‖ *ʔil-ʕarabiyya kafarit* the car wore out. - vn *kufr*; ava *kafraan, kaafir*.
كفر *kufr* /n/ blasphemy. *ma-fii-ʃ baʕd ik-kufr[i] zamb [prov]* there is no sin worse than atheism.
كفران *kafraan* /adj */ exasperated.
كافر *kaafir* /n pl *kuffaar, kafara*/ unbeliever, infidel. ‖ *yiṣʕab ʕala l-kaafir* ≈ it would wring tears from a stone. - *ʔil-guuʕ kaafir [prov]* hunger knows no laws.
أكفر *ʔakfar* /el/ more/most blasphemous, sinful, etc.
كفّارة *kaffaara* /n/ *[Isl]* pious act in expiation or compensation for misdeeds. ‖ *yoom il-kaffaara [Jud]* Yom Kippur, Day of Atonement.
كفّر *kaffar* /vt/ **1** to cause to blaspheme, cause to deny God's existence. **2** to consider or judge to be a blasphemer or infidel. **3** to tire, weary, sicken. *di ʕiiʃa tkaffar* what a wretched life! *fiḍil yidayiq-ni lamma kaffar-ni* he kept on annoying me until I had it up to here. **4** to cause to do penance for, make atone for. ‖ *ḥ-akaffar sayyiʔaat-u* I'll give him hell! – /vi/ **5** to do penance, atone. *kaffart[a] ʕan zunuub-i* I did penance for my sins. - vn *takfiir*; ava/pva *mikaffar*.
تكفير *takfiir* /n/ **1** atonement, penance. **2** inquisition.
اتكفّر *ʔitkaffar* or *ʔikkaffar* /vi/ passive of *kaffar*. - iva *mitkaffar*.

ك ف ر ( ) [2]
كفر *kafr* /n pl *kufuur, kufúra*/ small village, hamlet. *kafr iʃ-ʃeex* /prop n/ Kafr esh-Sheikh, a town and province in the Delta.
كفر *kafar[2]* <Engl *cover*> /n/ outer or inner bladder of

an inflatable football. *koora kafar* inflatable football.
كافور *kafuur* /n/ **1** eucalyptus tree(s) (Eucalyptus globulus). **2** camphor.

ك ف ر ت
كوفرتة *kufirta, kuvirta* <It *coperta*> /n pl *-aat*/ coverlet for a bed, bedspread. - also *kubirta*.

ك ف ر ى ه
كفريه *kufreeh* <Fr *coffret*> /n pl *-aat*/ *[elec]* terminal box.

ك ف ف ١
كفّ *kaff*[1] *(i, u)* **1** /vt/ to restrain. *laazim tikiff ibn-ak ɛan mifaksit il-ʕawlaad* you ought to keep your son from picking fights with the other kids. ‖ *kaff*[i] *ʕiid-u ɛan* to wash one's hands of, as in *kaffeet ʕiid-i ɛan il-ḥikaaya* I washed my hands of the matter. **2** /vi/ to refrain, abstain. *ʕaḥsan-lak tikiff*[a] *ɛan it-tadxiin* you had better not smoke. - vn *kafaʕaan, kaff*; ava *kaafif*; pva *makfuuf*.
كفّ *kaff*[2] /n pl *kufuuf*/ **1** palm (of a hand). *ḍarab kaff*[a] *ɛala kaff* he clapped his hands (as a gesture of despair). ‖ *kaff-u maftuuḥ* he's open-handed. - *ɛala kaff*[a] *ɛafriit* ≈ in a precarious situation. - *ʃal-ni ɛala kufuuf ir-raaḥa* he treated me very well. - *zahra kaff is-sabɛ* motif used in tent appliqué work (see Pl.H, 26). **2** object resembling a palm in function or position. *kaff*[i] *migdaaf* oar blade. *kaff*[i] *muxṭaaf* inner face of an anchor fluke. — /no pl/ **3** slap.
كفّة *kaffa*[1] /n pl *-aat*/ **1** pan (of a balance scale). **2** block (of a bicycle pedal).
كافّة *kaffit* /n in constr/ all of. *kaffit in-naas* all the people.
كفيف *kafiif* /adj pl *kufafa*/ blind.
مكفوف *makfuuf* /adj */ = *kafiif*.
انكفّ *ʔinkaff* /vi/ **1** to be restrained. **2** (impersonal) passive of *kaff*[1] 2. *mawḍuuɛ yinkaff*[a] *ɛannu* something one should stay away from. - iva/ava *minkaff*.
اتكفّ *ʔitkaff*[1] or *ʔikkaff*[1] = *ʔinkaff*. - iva/ava *mitkaff*.

ك ف ف ٢
كفّ *kaff*[3] *(i)* /vt/ to hem(stitch) (a garment). - vn *kifaafa*; ava *kaafif*; pva *makfuuf*.
كفافة *kifaafa* /n/ hemming, hemstitching.
اتكفّ *ʔitkaff*[2] or *ʔikkaff*[2] /vi/ to be hemmed, be hemstitched. - iva *mitkaff*.
كفّف *kaffif* /vt/ to hem(stitch) (a garment). - vn *takfiif*; ava/pva *mikaffif*.
اتكفّف *ʔitkaffif* or *ʔikkaffif* /vi/ to be hemmed, be hemstitched. - iva *mitkaffif*.

ك ف ل
كفل *kafal*[1]↑ *(i)* /vt/ **1** to look after, be responsible for. *kafalu l-ɛayyil* they took responsibility for the child. **2** to guarantee, ensure. *ʔil-qanuun bi-yikfil-lu l-ḥaqq* the law guarantees him the right. - vn *kafalaan, kafaala*; ava *kaafil*; pva *makfuul*.
كفل *kafal*[2] /n pl *kufuul, ʔakfaal*/ **1** rump (of a beast of burden). **2** hips.
كفالة *kafaala* /n/ *[leg]* bail.
كفولة *kafuula* /n pl *kawafiil*/ piece of cloth used as a baby's napkin.
كفيل *kafiil* **1** /adj/ apt, liable. *ʔil-ɛamla di kafiila b-ʔinnaha twaddii-k is-sign* this act (of yours) is liable to land you in prison. **2** /n * and pl *kafala*/ guarantor.
اتكفل *ʔitkafal* or *ʔikkafal* /vi/ passive of *kafal*[1]. - iva *mitkifil*.
كفّل *kaffil* /vt/ to make responsible, put in charge. *kaffil-ni bir-radd*[a] *ɛat-tilifoon* he assigned me to answer the phone. - vn *takfiil*; ava/pva *mikaffil*.
اتكفّل *ʔitkaffil* or *ʔikkaffil* /vi/ **1** to be ensured, be guaranteed. **2** to be made responsible, be put in charge. **3** to assume responsibility. - ava/iva *mitkaffil*.

ك ف ل ل
كفالو *kafallu* <It *cavallo*> /n/ inside leg measurement.

ك ف ل ى ه
كفيليه *kavileeh* <Fr *clavier*> /n pl *-aat*/ piano keyboard.

ك ف ن
كفن *kafan* /n pl *ʔakfaan*/ shroud, winding sheet. *yiigi maɛa l-laban yiruuḥ maɛa l-kafan [prov]* ≈ from birth to death, life is but a passing show.
كفّن *kaffin* /vt/ to enshroud, wrap in a winding sheet. *ɣassilna l-marḥuum wi-kaffinnaa* we washed the deceased and wrapped him in a shroud. - vn *takfiin*; ava *mikaffin*.
مكفّناتي *mikaffinaati* /n pl *-yya*/ *[obsol]* undertaker.
اتكفّن *ʔitkaffin* or *ʔikkaffin* /vi/ passive of *kaffin*. - iva *mitkaffin*.

ك ف ى ١
كفى *kafa*[1] *(i)* /vt/ **1** to suffice, be sufficient for. *ʔil-ʔakl*[i] *ma-yikfi-naa-ʃ kull-i-na* there is not enough food for all of us. *ma-kafa-k-ʃ illi ʃuft-u* haven't you been through enough? *ma-dda-nii-ʃ maɛlumaat kafya* he didn't give me enough information. **2** to shield from, protect from (of God). *rabb-i-na yikfii-na ʃarr il-balaawi* (may the Lord protect us from the evil of afflictions) ≈ God help

us! ‖ *kaf-alla ʃ-ʃarr* ≈ God forbid, God protect us! *kaafi xeer-u ʃarr-u* indifferent, neither good nor bad, as in *waaqif kaafi xeer-u ʃarr-u* just standing there minding his own business. - vn *kifaaya*; ava *kaafi*.

كفاية *kifaaya* **1** /n/ sufficiency, a sufficient amount. *kull[i] maḥall[i] yaaxud kifayt-u min il-biḍaaʕa* each store takes enough of the merchandise to meet its needs. *ʕaẓunn ana ʠult[i] kfaaya* I think I've said enough. ‖ *xad kifayt(-u)* to get satisfaction, have one's fill, as in *ʠaʕad yiʀiiẓ il-ʕawlaad lamma xad kifayt-u* he teased the children to his heart's content. **2** /interj/ enough! *kifaaya d-dawʃa di* that's enough of this racket! **3** /adj invar/ sufficient. *ma-gabuu-ʃ ʕakl[i] kfaaya* they didn't bring enough food.

كفّى *kaffa*[2] **1** /vi/ to suffice. *ʕil-gineeh ma-ʕad-ʃ[i] bi-ykaffi b-ḥaaga* a pound doesn't buy much these days. ‖ *ʕana mkaffi ʕal-wilaad bit-tiila* I can hardly provide for my children. **2** /vt/ to be sufficient for, satisfy. *ʕil-kimmiyya di ḥa-tkaffii-k baʠa* will this amount be enough for you then? *ʕilli fiina mkaffii-na* we've got quite enough on our minds as it is. - vn *takfiyya*; ava *mikaffi*.

اكتفى *ʕiktafaʔ* **1** /vi/ to content oneself, be satisfied. *ʕiktafeet bi-kubbaayit ʃaay* I made do with a glass of tea. ‖ *ʕil-ʕiktifaaʔ iz-zaati* self-sufficiency. **2** /vt/ to be spared (s.th.), be protected against. *ʕuʠlub li-gaar-ak il-xeer - ʕin ma-nilt[i] minnu tiktifi ʃarr-u [prov]* wish your neighbour well; then if he doesn't help you at least he won't harm you. - vn *ʕiktifa, ʕiktifaaʔ*; ava *miktifi*.

استكفى *ʕistakfa* /vi/ to have one's fill, have enough. *ʕiyaal-u mistakfiyyiin min kull-u* his children have enough of everything. - vn *ʕistikfa*; ava *mistakfi*.

ك ف ى [2]

كفا *kafa*[2] *(i)* /vt/ **1** to turn upside-down. ‖ *ʕikfi ʕal-xabar maguur* (invert a kneading crock over the news) ≈ keep it under your hat. - *makfi ʕala gbiin-u* resting his forehead on his arm. - *makfi ʕala ʕeen-u* stupid, dumb. - *ʕikfi l-ʠidra ʕala fumm-a-ha tiṭlaʕ il-bint[i] l-ʕumm-a-ha [prov]* ≈ like mother, like daughter. **2** to make fall, bring down. *law ma-ʂkitt[i]-ʃ ḥ-akfii-k ʕala buuz-ak* if you don't shut up I'll send you sprawling on your ugly mug! - vn *kafy, kafya, kafayaan*; ava *kaafi*; pva *makfi*.

كافية *kafya* /n/ disaster, catastrophe. *ʕiʃ-furb[i] gab-lu k-kafya* drinking brought him to ruin.

انكفى *ʕitkafa* or *ʕikkafa* /vi/ **1** to be turned upside-down. **2** to fall down. *ʕikkafeet ʕala wiʃʃ-i* I fell flat on my face. - ava/iva *mitkifi*.

انكفى *ʕinkafa* = *ʕitkafa*. - ava/iva *minkifi*.

[3] ك ف ى see ك و ف : *kufiyya*

ك ف ى ر

كوفير *kufeer* <Fr *couvert*> /n/ **1** place setting. **2** service charge.

ك ك ا و

ككاو *kakaaw* <Fr *cacao*> /n/ cocoa. ‖ *zibdit kakaaw* lip-salve.

ك ك ت ى ل

كوكتيل *kuktiil, kukteel* <Engl> /n pl *-aat*/ cocktail.

ك ك ا see ك ا ك ا : *kakkaa*

ك ك ك و ك

كوكوكوكو *kukukuuku* /interj/ cock-a-doodle-doo!

– ك ك ك و see ك ك و ل ا : *kukakuula*

(ك ك و ل)

كاكولة *kakuula[1]* /n pl *-aat, kawakiil*/ long straight overcoat with buttons down the front and half-collar (usually worn by members of the Muslim religious professions, see Pl.F, 15).

كاكولا *kakoola, kakuula*[2] (also *kukakuula*) <trade n> /n/ Coca Cola.

ك ك ى

كاكا *kaaka, kaaka*[2] *(i)* /vi/ to cackle, cluck (of chickens). ‖ *ḥ-aḍrab-u lamma ʕaxallii yikaaki* I'll beat him until I make him gibber. - vn *mikakiyya*; ava *mikaaki, mikaaki*.

كاكا *kaaka*[3] /n/ *[children]* chicken.

ك ك ى ى ن see ك ى ن [1] : *kukayiin*

ك ل ا ر see ك ر ا ر : *kalaar*

ك ل ا ط

كلاطة *kulaaṭa, kalaaṭa* <It *culatta*> /n/ *[butcher]* rump.

ك ل ا ل

كلالة *kilaala* <prob Copt> /n pl *-aat*/ wooden strut to which a pot on a water-wheel is attached (see Pl.E, 13).

ك ل ب

كلب *kalab[1] (i)* /vt/ to infect with rabies. *ʕaḍḍ-u kalb[i] ʂaʕraan kalab-u* a rabid dog bit him and gave him

rabies. ‖*kalb[i] yiklib-u* to hell with him! - vn *kalabaan*; ava *kaalib*; pva *makluub*.

كلب *kalib, kalab*[2] (also *daaʃ il-kalib*) /n/ rabies.

كلب *kalb* /n pl *kilaab*/ **1** dog. ‖*kalb il-baḥr* seal. - *ʃibn[i] kalb* (1) *[abus]* bastard, son of a bitch. (2) /appositive with masc n referent, *bint[i] kalb* with fem n referent/ ≈ terrific, as in *xaṭabt[i] ḥittit xuṭba bint[i] kalb* I gave a terrific speech. - *ya gins[i] kalb* you dog! - *kalb[a] ḥayy[i] wala sabɛ[i] mayyit [prov]* (a live dog rather than a dead lion) ≈ a bird in the hand is worth two in the bush. - *ʃin kan-lak ɛand il-kalb[a] ḥaaga qul-lu ya siid-i [prov]* ≈ endure any humiliation to get what you want. - *ɛumr[i] deel il-kalb[i] ma-yinɛidil [prov]* ≈ a leopard doesn't change his spots. - *ʃik-kalb[i] ma-yɛuḍḍ[i]-ʃ fi-widn[i] ʃaxuu [prov]* ≈ crows will not pick out crows' eyes. **2** jaw (of a clamp or the like). **3** piece, man (in the game of *siiga*).

كلبة *kalba* /n pl *-aat*/ **1** female dog, bitch. ‖*baaliɛ kalba* always yapping. **2** link (of a chain). **3** jig fixture.

كلبان *kalbaan* /adj/ rabid, mad (of a dog).

كلابي *kilaabi* /adj/ canine.

كلّابة *kullaaba* /n pl *-aat*/ **1** pair of pliers. **2** pair of extraction forceps.

اتكلب *ʃitkalab* or *ʃikkalab* /vi/ to be infected with rabies. - iva *mitkilib*.

انكلب *ʃinkalab* = *ʃitkalab*. - iva *minkilib*.

ك ل ب ب

كلوبّ *kulubb* <Engl *globe*> /n pl *-aat*/ mantle-lamp.

كلوبّاتي *kulubbaati* /n pl *-yya*/ *[obsol]* one who sells, mends or tends mantle-lamps.

ك ل ب س

كلبس *kilibs* <Engl *clip*> /n pl *-aat*/ fastening device which clips or grasps. *kilibs[i] lif-faɛr* hairpin. *kilibs[i] waraq* paper clip. *ḥalaq kilibs* clip-on earrings.

ك ل ب س –

كولبسطي *kulbasṭi* <T *külbastı*> /n/ a dish consisting of poultry, game, or meat either grilled or fried gently in very little fat. *ʃaraanib kulbasṭi* rabbit sauté.

ك ل ب ش

كلبش *kalabʃ* <T *kelepçe*> /n pl *-aat*/ handcuff. *ḥaṭṭuu fik-kalabʃ* (or *fik-kalabʃaat*) they put him in handcuffs, they took him off to jail.

كلبش *kalbiʃ* /vt/ **1** to grip and hold immovable. *ʃir-rumatizm[i] kalbiʃ rukab-i* rheumatism made my knees too stiff to move. — /vi/ **2** to grab, hold, fasten on. *ʃil-muxṭaaf lamma yitrimi ykalbiʃ fil-ʃarḍ* when the anchor is tossed it catches on the bottom. **3** to knot up, cramp. *lamma ʃaakul simiin baṭn-i tkalbiʃ* when I eat greasy food my stomach gets cramp. - vn *kalbaʃa*; ava *mikalbiʃ*.

اتكلبش *ʃitkalbiʃ* or *ʃikkalbiʃ* /vi/ to be or become clenched or clamped together. *gism-u yxaʃʃib wi-ḍabbit-u titkalbiʃ* his body becomes rigid and his jaw clenches. - ava *mitkalbiʃ*.

ك ل ب ظ

كلبظ *kalbaẓ* /vi/ to become plump. - vn *kalbaẓa*; ava *mikalbaẓ*.

كلبوظ *kalbuuẓ* /adj pl *kalabiiẓ*/ plump, chubby. *ya ḳalbuuẓ ya mkalbaẓ* hey, fatso!

اتكلبظ *ʃitkalbaẓ* or *ʃikkalbaẓ* = *kalbaẓ*. - ava *mitkalbaẓ*.

ك ل ب و ش

كلبوش *kalabooʃ* <perh Sp *calabozo* jail> /n/ *[joc]* handcuff.

ك ل ت ت)

كلوت *kulutt* <Fr *culotte*> /n pl *-aat*/ men's or women's or children's underpants. *kulutt[i] naylun* plastic pants.

كالوتّة *kalutta* <It *calotta*> /n pl *-aat*/ skullcap.

ك ل ت ش

كلاتش *kalaiʃ* <Engl> /n pl *-aat*/ *[auto]* clutch.

ك ل ح [1]

كلح *kiliḥ*[1] *(a)* /vi/ to fade (of colour). ‖*ʃiklaḥ baqa* you ought to be ashamed of yourself! - *wiff[i] kaaliḥ* (1) a scowling face. (2) one who brings misfortune. - vn *kalḥ, kalaḥaan*; ava *kalḥaan, kaaliḥ*.

كلح *kalaḥ (a)* /vt/ to cause to fade. ‖*kalaḥnaa min ɛandina* we got rid of him. - vn *kalḥ, kalaḥaan*; ava *kaaliḥ*; pva *makluuḥ*.

كلح *kiliḥ*[2] /adj */ insensitive, thick-skinned, cheeky.

أكلح *ʃaklaḥ* /el/ more/most insensitive etc.

اتكلح *ʃitkalaḥ* or *ʃikkalaḥ* /vi/ **1** to fade away, vanish, disappear. **2** to be made to fade. - ava/iva *mitkiliḥ*.

انكلح *ʃinkalaḥ* = *ʃitkalaḥ*. - ava/iva *minkiliḥ*.

استكلح *ʃistaklaḥ* /vi/ to display cheekiness. - ava *mistaklaḥ*.

ك ل ح [2]

كالوح *kaluuḥ* /n pl *kawaaliḥ*/ corn cob. - also *ḳaluuḥ*.

ك ل د ى ن
كلودين *kuludiin* <Fr *claudine*>: *kool kuludiin* see *kool*.

ك ل ر ا see ك ل ى ر ا : *kulira*

ك ل ر ن –
كلارنيت *kalarneet, kilarinett* <Engl> /n/ clarinet.

ك ل ر ى ا
كلوريا *kulurya* /n/ a small hard cake.

ك ل ر ى د
كلوريد *kuluriid* <Fr> /n/ chloride.

ك ل س ت –
كلستومة *kilistooma↓* /n/ *[obsol]* ankylostomiasis clinic.

ك ل س ك –
كيلوسيكل *kilusikl* <Fr> /n/ kilocycle.
كيلوسايكل *kilusaykil* <Engl> /n/ kilocycle.

ك ل س و ن
كلسون *kalsoon, kalsuun* <Fr *caleçon*> /n pl *-aat, kalasiin*/ men's long or short underpants.

ك ل س ى ر
كلاسير *kilaseer* <Fr *classeur*> /n pl *-aat*/ loose-leaf file, ring-book.

ك ل س ى ك
كلاسيكى *kilasiiki* <Fr *classique*> /adj/ classical. *musiiqa klasikiyya* classical music.

ك ل س ى –
كلسيوم *kalsiyum* <Fr> /n/ calcium.

ك ل ش ن – see ك ل ل [3] : *kullifinkaan*

ك ل ش ى ه
كليشيه *kilifeeh* <Fr *cliché*> /n pl *-aat*/ **1** cliché, hackneyed phrase. **2** *[print]* cliché. - also *ʔaklafeeh*.

ك ل ص see ك ل ل ا ص : *kullaaṣ*

ك ل ض م
كلضم *kalḍam* /vi/ **1** to become sulky, pout. **2** to become chubby or heavy-jowled. - vn *kalḍama*; ava *mikalḍam*.
اتكلضم *ʔitkalḍam* or *ʔikkalḍam* /vi/ (impersonal) passive of *kalḍam*. *ʔitkalḍam laha* she was given the cold shoulder. - iva *mitkalḍam*.

ك ل ط see ك ل ا ط : *kulaaṭa, kalaaṭa*

ك ل ف [1]
كلفة *kulfa* /n/ **1** expenditure. **2** trouble, fuss (put on for guests). — /pl *kulaf*/ **3** trimming, garniture (of a dress, shirt etc.).
كلاّف *kallaaf* /n */ *[rur]* stable-man (responsible for feeding livestock).
كلّف *kallif*[1] /vt/ **1** to go to the expense of. *kallif ʕaleeha xamsa gneeh* he forked out five pounds for it. **2a** to put to expense. *bi-ykallifuu-ni ktiir* they put me to a lot of expense. *ḫa-ykallif-ak talaata gneeh* it will cost you three pounds. *ʔadd[i] ma* (or *ʔayy[i] ma) ykallif* whatever it costs, whatever the cost. **2b** to put to great trouble (particularly in hospitality). *min ʕeer takliif* there is no need to stand on ceremony. *ʔiḥna miʃ ḍuyuuf ma-fii-ʃ luzuum tikallif nafs-ak kida* we're (friends) not guests, you don't have to go to so much trouble. *kallifit xaṭir-ha w-gabit-li t-tazkara* she went to the trouble of getting me the ticket. **3** to charge, entrust. *kallif-ni bil-maḥall* he put me in charge of the shop. ‖ *ʔamr[i] takliif [acad]* obligation of graduates in certain subjects to work for a period in public service. **4** to trim (a garment). *kallifit ig-gallabiyya b-ʔiṭaan ḫariir* she trimmed the galabiya with silk piping. - vn *takliif*; ava *mikallif*; pva *mukallaf↑*.
تكليف *takliif* /n pl *takaliif*/ **1a** expenditure, outlay. **1b** expense, cost. **2** *[leg]* **2a** responsibility for paying taxes on land. **2b** terrier, land register.
تكلفة *taklifa* /n/ **1↑** expense. **2** basic cost. *bi-siʕr it-taklifa* at cost price.
مكلّفة *mukallafa* /n pl *-aat*/ terrier, land register.
اتكلّف *ʔitkallif* or *ʔikkallif* /vi/ **1** passive of *kallif*. **2** to cost. *dirast-ak itkallifit ʔalf[i] gneeh* your studies cost a thousand pounds. - ava/iva *mitkallif*.
تكلّف *takalluf↑* /n/ pretentiousness, affectedness.
متكلّف *mitkallif* /adj/ fancy, elaborate.
متكلّف *mutakallif↑* /adj */ pretentious, affected.
استكلف *ʔistaklif* /vt/ to consider too troublesome. *ʔistaklifit titawlit nafs-a-ha* she thought it was too much trouble to put on make-up. - ava/pva *mistaklif*.

ك ل ف [2]
كلف *kalaf↑* /coll n/ freckle(s).
كلّف *kallif*[2] /vi/ to break out in freckles. - ava *mikallif*.

ك ل ف ت

كلفتي *kilifti* <Engl *clifty*, cf also Gr *klephtês*> /adj invar/ *[joc]* crooked, dishonest.

كلفت *kalfit* /vt/ **1** to deal with (s.o. or s.th.) hastily and in slapdash fashion. *ʏaawi ykalfit fuxl-u* he's given to hasty slapdash working. *kalfitt il-mudiir wi-maḍḍeet-u ɛala ʕagazt-i* I bustled the director into signing (approval) for my holiday. **2** to bundle up, wrap up. *kalfit il-huduum wi-hat-haa-li* bundle up the clothes and bring them to me! *kalfit nafs-ak mil-bard* wrap yourself up against the cold. - vn *kalfata*; ava/pva *mikalfit*.

مكلفتاتي *mikalfitaati* /n pl *-yya*/ slapdash worker.

اتكلفت *ʕitkalfit* or *ʕikkalfit* /vi/ passive of *kalfit*. - vn *tikalfiit*; ava *mitkalfit*.

ك ل ك

كلك *kalk* <Fr *calque*>: *waraq kalk* tracing paper.

ك ل ك ت ت

كلاكيت *kilakitt, kalakitt* <Fr *claquette*> /n/ *[cin]* clapper board, clap-stick.

ك ل ك س

كلكس *kalaks, kilaks* <Fr *klaxon*> /n pl *-aat*/ *[auto]* horn. *ʕiddii-lu klaks* give him a toot on the horn.

ك ل ك ع

كلكع *kalkaɛ* /vi/ to become lumpy, form a lump. *ʕid-damm[i] kalkaɛ* the blood clotted. - vn *kalkaɛa*; ava *mikalkaɛ*.

مكلكع *mikalkaɛ* /adj */ lumpy. *ḥaaga mkalkaɛa fil-bizz if-fimaal* something lumpy in the left breast.

كلكوعة *kalkuuɛa* /n pl *kalakiiɛ*/ lump, clot.

كلكيعة *kulkeeɛa* /n pl *kalakiiɛ*/ lump, clot.

اتكلكع *ʕitkalkaɛ* or *ʕikkalkaɛ* = *kalkaɛ*. - ava *mitkalkaɛ*.

ك ل ك ل

كلكل *kalkil* /vi/ to become lumpy. - vn *kalkala*; ava *mikalkil*.

اتكلكل *ʕitkalkil* or *ʕikkalkil* = *kalkil*. - vn *tikalkiil*; ava *mitkalkil*.

ك ل ك ل –

كلوكلوه *kulukluuh* <Fr *clou-clou*> /n/ ice-cream cone sealed with a hard chocolate topping.

ك ل ك و ز

كلوكوز *kulukooz, kuluukooz* <Fr> /n/ glucose.

ك ل ل [1]

إكليل *ʕikliil* /n pl *ʕakaliil*/ **1** wreath or crown, particularly as worn by the bride and groom during an Orthodox wedding ceremony. **2** Orthodox wedding ceremony. ‖ *ɛaqd[i] ʕikliil* marriage certificate, marriage contract. - *nuṣṣ[i] ʕikliil* formal engagement service conducted by a priest.

كلّل *kallil* /vt/ **1** to crown. **2** *[Chr]* to perform the marriage ceremony for, marry (of a priest). - vn *takliil*; ava *mikallil*.

اتكلّل *ʕitkallil* or *ʕikkallil* /vi/ **1** to be crowned. *muḥawlaat-u tkallilit bin-nagaaḥ* his efforts were crowned with success. **2** *[Chr]* to get married. - ava/iva *mitkallil*.

ك ل ل [2]

كلّ *kall (i)* /vi/ **1** to become blunt. **2** to become jaded. *kalleet min kutr if-fuxl* I became jaded with overwork. - vn *kalal, kalalaan*; ava *kaalil*.

كليل *kaliil* /adj */ weak, feeble. *kaliil il-baṣar* weak-sighted.

ك ل ل [3]

كلّ *kull* /n/ **1** whole, totality, entirety. *da l-beet kull-u* that's the whole of the house. *ʕid-dawʃa di kull-a-ha* all this noise. *ʕil-kull[i] b-yistaɛidd[i] lil-yoom da* everyone's getting ready for that day. *kull if-fuqaq mafruuʃa* all the flats are furnished. *dulaab kibiir kull-u sakakiin* a big cupboard full of knives. *kull-ak xeer* you are all kindness. *kull-ak naẓar* ≈ I leave it to your discretion. *kull[i] ma fil-ʕamr inn* all it amounts to is that ..., as in *kull[i] ma fil-ʕamr innu ṣaḥb-u fa-raqqaa* he's his friend, so he promoted him - that's all there is to it. ‖ *ʕumm" kalsuum kull-a-ha raaḥit* Umm Kalthum herself went. - *bitaaɛ kull-u* (1) jack of all trades. (2) know-all. - *kull-a-ha farkit kaɛb* it's no more than a stone's throw. - *kull-a-ha ʃahr[i] ʃahreen* it's just a matter of a month or two. - *kull-i-na laha* death comes to us all. - *sitt il-kull* a jewel among women. - *da-nta l-kull[i] fil-kull* ≈ everything depends on you. - *wi-kull-u* and all that, and what not, as in *baɛd[i] ma kalna w-kull-u ruḥna s-sinima* after we'd eaten and everything, we went to the cinema. - *kull-u ʕilla* anything but, as in *kull-u ʕilla kida* everything but that. - *ɛala kullin* or *maɛa kullin* or *maɛa kull[i] zaalik* anyhow, as in *ɛala kullin ʕana miʃ qalqaan* anyway, I'm not worried. **2** /w foll indef noun/ every, each. *kull[i] yoom* every day. *kull[i] ʃwayya* every so often. *kull[i] waaḥid fiikum* each one of you. *ɛala kull[a] ḥaal* in any case. ‖ *bi-kull[i] diqqa* very precisely. - *bi-kull[i] mamnuniyya* with the greatest of pleasure.

¶ *kull^{i} ma* /conj/ whenever. *kull^{i} ma yibɛat ʃakwa ʃabɛat ʃarbaɛa* whenever he lodges a complaint I lodge four. — *kull^{i} ma ... (kull^{i} ma)* /correl conj/ the more ... (the more). *kull^{i} ma kaan it-taraddud ɛaali kull^{i} ma kaanit il-mooga qṣayyara* the higher the frequency the shorter the wave. *kull^{i} ma yikbar il-mas ʃuliyya ḥa-txiff^{i} min ɛalee* as he gets older his responsibility will lessen.

كلّيت *kulleet* = *kull* 1.

كلّات *kullaat [non-Cairene]* = *kull* 1.

كلّي *kulli* /adj/ total. *bing^{i} kulli* general anaesthetic.

كلّية *kulliyya* /n pl *-aat*/ college, faculty (of a university). *kulliyyit iṭ-ṭibb* the Faculty of Medicine.

¶ *kulliyyatan* /adv/ completely.

كلّشنكان *kullifinkaan* /adv/ haphazardly, carelessly. *ma-fii-ʃ waqt - laazim nixallaṣ-ha kullifinkaan* there's no time, we have to finish it any way we can.

كليلة *kaliila: ʃil-kull^{i} kaliila* one and all, every (last) one, as in *xaduu-hum il-kull^{i} kaliila* they took them one and all. *yilɛan ʃabuu-ku l-kull^{i} kaliila* God damn you all!

ك ل ل [4]

كلّة *kulla* <It *colla*> /n/ paste, glue. *malzuuq bi-kulla ɛala l-xaʃab* stuck onto the wood with glue.

ك ل ل [5] see ك ل ا ل: *kalaala*

ك ل ل ا ص

كلّاص *kullaaṣ* <Copt> /n/ a kind of *ziir* (q.v.).

ك ل ل و

كالّو *kallu* <It *callo*> /pl n/ corns (on the foot).

ك ل م [1]

كلمة *kilma* /n pl *-aat, kalimaat*/ 1 word. *kilma kilma* word for word. *ʃil-kilmiteen dool ʃassaru fiyya* those few words affected me. *bi-titɛarraf bil-kilma di* it is defined by this term. *ma-ɑal-ʃ^{i} wala nuṣṣ^{i} kilma* he didn't utter a single word. ‖ *ʃibn^{i} kilma* a man easily swayed, a gullible person. - *ʃil-kilma ɛaleeha* she is spoken for (in marriage). - *kilmit-u waḥda* (1) he's a man of his word. (2) he sticks to one price (you can't bargain with him). - *kilma kida walla kida* offensive talk. - *baɛd^{i} kilma minni w-kilma minhum* after a lot of debate between us. - *(hiyya) kilma w-radd^{i} ɤaṭaa-ha* keep it short! give a brief answer! - *raagil luh kilma* (1) a man of his word. (2) a man of authority. - *raagil ma-luu-ʃ kilma* a man whose word cannot be trusted. - *kilma tgiib-u w-kilma twaddii* he's easily led. 2 phrase, utterance. *kilma maʃhuura* a famous saying. ‖ *ma-tʃaaxiz-nii-ʃ fi-di l-kilma* forgive me for saying this. 3 address, talk. *kilma ʃiftitaḥiyya* opening address.

كلام *kalaam* /n/ 1 speech, talk, words. *da* (or *ʃahu) kalaam* that's (just) talk! *ʃil-kalaam fil-ḥubb^{i} miʃ kifaaya* talking about love is not enough. *ʃil-kalaam sahl innama l-fiɛl^{i} ṣaɛb [prov]* easier said than done. *miʃi la kalaam wala ḥadiit* he left without a word. *hiyya di ɛayza kalaam* does this really need discussion? it goes without saying. *ɛand^{i} miin ik-kalaam da* says who? ‖ *kalaam-ak* your bid! (in card games). - *raagil ɛalee kalaam* a man of dubious reputation. - *ʃil-kalaam ɛaleeha* she is spoken for. - *bi-yiṭlaɛ ɛalee kalaam* people say things about him. - *ma-fii-ʃ kalaam* it goes without saying. *da kalaam garaayid* newspaper talk (i.e. not to be believed)! - *ʃana gay-lak fik-kalaam* I'm coming to that. - *maʃʃa kalaam-u* he had his way. - *huwwa ɛand^{i} kalaam-u* he is keeping his word. - *simiɛ ik-kalaam* to do as one is told, as in *ma tismaɛ kalaam baaba* do as daddy says! - *yibiiɛ bi-kalaam waaḥid* he sells at fixed prices. - *kalaam il-leel madhuun bi-zibda lamma yiṭlaɛ ɛalee n-nahaar yisiiḥ [prov]* (evening words are buttered; when the sun rises they melt away) ≈ evening words are not like those of morning. 2 state of affairs, condition. *ʃizzayy ik-kalaam da* how could that be? *min ʃimta k-kalam-da* when did that happen? *ʃil-kalaam da kaan zamaan* all that was a long time ago. *da kalaam taani* that's another matter! that's a horse of a different colour! ‖ *da miʃ kalaam* that's not possible! that's nonsense! - *baqa da kalaam da* now, really, does that make any sense, can you really accept such a state of affairs? *ʃayy^{i} kalaam* (1) nonsense, piffle, as in *da kalaam ʃayy^{i} kalaam* that's just a lot of rubbish. (2) any old way, sloppily, as in *da b-yilbis ʃayy^{i} kalaam* his dress is careless and sloppy, *ʃin-naggaar ɛamal ik-karaasi ʃayy^{i} kalaam* the carpenter knocked those chairs together any old how. - *wi-kalaam min da* or *wi-kalaam zayy^{i} kida* and that sort of thing, and so on and so forth, as in *ma-bi-traɛii-ʃ ʃawlad-ha w-kalaam zayy^{i} kida* she doesn't take care of her children and stuff like that. 3 (also *ɛilm ik-kalaam*) *[Isl]* Islamic theology.

كلمنجي *kalamangi* /n pl *-yya*/ big talker, chatterbox, loudmouth.

مكلمة *maklama* /n/ *[deris]* any place used for idle chatter. *ʃintu ḥa-tiɛmilu l-maktab maklama* are you going to make the office into a place for idle talk?

مكالمة *mukalma* /n pl *-aat*/ telephone call.

مكلماني *muklimaani* /n pl *-yya*/ = *kalamangi*.

مكلمنجي *maklamangi* /n pl *-yya*/ = *kalamangi*.

كلّم *kallim* /vt/ to speak to, address. *ma-tkallim-nii-ʃ bis-siim* don't speak to me in riddles. *kunt*^{i} *b-akallim-u fil-ḥubb* I was speaking to him about love. ‖*bi-txallii yimʃi ykallim nafs-u* she drives him out of his mind. - vn *takliim*; ava *mikallim*.
¶ *kallim* /fem *kallimi*, pl *kallimu*/ you're wanted, someone wants (to talk to) you. *kallim it-tilifoon* you're wanted on the phone. *kallim barra* you're wanted outside.
اتكلّم *ʔitkallim* or *ʔikkallim* **1** /vi/ to speak, talk. *di masaaʔil ʔil-waaḥid ma-yitkallim-ʃ*^{i} *fiiha* these are matters that shouldn't be discussed. *bi-titkallimu fi-* (or *ɛan* or *ɛala) ʔeeh* what are you talking about? *ʔinta b-titkallim izzaay* what the hell are you talking about? *kunt*^{i} *b-atkallim fit-tilifoon* I was talking on the telephone. ‖*ḥadd itkallim* has anyone called (on the phone)? - *ʔitkallim ɛaleeha* he asked for her hand in marriage. **2** /vt/ to speak (a language). *bi-titkallim kaam luɣa* how many languages do you speak? - vn *takallum*; ava *mitkallim*.
متكلّم *mutakallim* /n */ speaker.

ك ل م [2] see ك ل ى م : *kiliim*

ك ل م ت ر
كيلومتر *kilumitr* <Fr *kilomètre*> /n pl *-aat*/ kilometre.
كيلومترى *kilumitri* /adj/ kilometric. *ʔiftiraak kilumitri* train ticket calculated on a basis of distance.

ك ل م ت –
كيلومتراج *kilumitraaj* <Fr> /n/ mileage.

ك ل ن see ك ل ى ن : *kuliin*

ك ل ن ج ى see ك ل و ن [1] : *kalungi, kalungiyya*

ك ل ن ى ا
كلنيا *kulunya* <It *colonia*> /n pl *-aat*/ cologne.

ك ل ن ى ه
كلونيه *kaloneeh* <perh Fr *galonné*> /n pl *-aat*/ *[needlew]* tuck.

ك ل و
كلوة *kilwa* /n pl *-aat, kalaawi*/ **1** kidney (as food). *beet il-kalaawi* (meat from) the area round the kidneys. **2**↓ /pl *-aat* only/ kidney (as an organ of the body). ‖*kilwit il-ʔiid* ball of the thumb.
كلية *kilya* /pl *-aat, kila*/ *[anat]* kidney.
كلوى *kalawi* /adj/ **1** pertaining to the kidneys, renal. *maɣaṣ kalawi* renal colic. **2** kidney-shaped.

ك ل و ت
كلوت *kuluut: kuluut beeh* Clot Bey Street in Cairo, once famous for its red-light district.

ك ل و ر
كلور *kuloor* <Fr *chlore*> /n/ chlorine.

ك ل و ش
كلوش *kuloof* <Fr *cloche*> /adj invar/ wide, full (of a garment or its part). *fustaan kuloof* a full-skirted dress.

ك ل و ن [1]
كالون *kaluun, kaloon* /n pl *kawaliin, kalunaat*/ door lock. *mafatiiḥ lil-kawaliin* keys for the locks.
كالونجى *kalungi* /n pl *-yya*/ locksmith.
كوالينجى *kawalingi* /n pl *-yya*/ locksmith.

(ك ل و ن) [2]
كلون *kuloon* <Fr *collant*> /n pl *-aat*/ tights.
كلونة *kuloona* <It *colonna*> /n/ acrobatic feat in which three men balancing on each other's shoulders support a fourth who performs tricks.

ك ل ى see ك ل و : *kilya*

ك ل ى ر ا
كوليرا *koleera* (also *kulira*) <It> /n/ cholera. - also *koreera*.

ك ل ى م
كليم *kiliim* <T *kilim*> /n pl *-aat, kilíma*/ woven rug. *kiliim mixaṭṭaṭ ɛal-mabrad* a diagonally-striped rug.

ك ل ى ن
كولين *kuliin* <Fr> /n/ kaolin.

ك م
كام *kaam, kam* **1** /interrog quantifier/ how many? how much? *ʔistanneet kaam saaɛa* how many hours did you wait? *kaam sitt*^{i} *kida zayy-ik* how many women are like you? *ḥisaab-hum kaam* how much is their bill? *dafaɛt*^{i} *kaam* how much did you pay? *ʔil-quuṭa b-kaam in-nahar-da* how much are tomatoes today? *ʔiftareet-u b-kaam* for how much did you buy it? **2** /interrog numerary specifier/ what (number)? *ʔis-saaɛa kaam* what time is it? *nimrit it-tilifoon kaam* what's the telephone number? *fi-sanat kaam* in what year? *ɛala buɛd*^{i} *kaam* at what distance? *tiigi ɛala kaam* what time are you coming? **3** /unspecific quantifier/ some, a few. *faat*

kaam yoom a few days went by. *ʕiddii-ni kaam ḫittit ṣabuun* give me a few bars of soap. *nisyit il-kaam kilma lli qult[i]-ha-lha* she forgot the few words I told her. *been kull[i] kaaṁ ʤaskari ẓaabiṭ* between every few soldiers there is an officer.

كمّيّة *kimmiyya, kammiyya* /n pl *-aat*/ amount, quantity. *yizawwid kimmiyyit il-banziin in-nazla fil-mutoor* it increases the amount of petrol going into the engine. *ḫ-agib-lak kimmiyyaat tanya min il-ʤizba* I'll bring further quantities from the estate.

ك م اج

كماج *kimaag* <P *kumâj*> /coll n/ type of wheat bread.

كماجة *kimaaga* /unit n, pl *-aat*/ a loaf of *kimaag*.

[1] ك م ا ن

كمان *kamaan[1]* /adv/ **1** also, too, as well. *ʕinta kamaan lak sulṭaat* you too have powers? *saakin fi-ʃaqqa gdiida w-gamiila kamaan* he lives in an apartment which is new and pretty as well. *miʃ ḫ-aḥaṣṣal la marḫala talta wala rabʕa kamaan* I won't reach either the third or the fourth stage. **2** in addition, more. *haat qahwa kamaan* bring another coffee. *kamaan nooba* one more time. *ʕistanna kamaan ʃiwayya* wait a little more!

[2] ك م ا ن

كمان *kamaan[2]* <T *keman* from P> **1** /coll n/ violin(s). **2** = *kamanga*. see further under ك م ن ج

ك م ا و see ك م ى : *kamaawi, kamawiyyaat*

ك م ب

كامب *kamb* <Engl> /n pl *-aat*/ camp.

ك م ب ر س

كمبارس *kumbars* <Fr *comparse*> /invar n/ *[cin]* extra.

– ك م ب ر

كمبرسول *kumburisuul* <Fr *compresseur*> /n/ air compressor.

ك م ب ش

كمبوش *kamboof* /n/ untidy head of hair.

كمبش *kambiʃ* **1** /vt/ to dishevel (hair). **2** /vi/ to be dishevelled (of hair). - vn *kambaʃa*; ava/pva *mikambiʃ*.

اتكمبش *ʕitkambiʃ* or *ʕikkambiʃ* /vi/ to be or become dishevelled (of hair). - ava/iva *mitkambiʃ*.

– ك م ب ل

كمبليه *kumbileeh* <Fr *complet*> /adj invar/ **1** full, filled to capacity (of a cinema etc.). **2** complete (of a restaurant meal). **3** sold out (of tickets, and the like).

– ك م ب ن

كومبينزون *kumbinezoon* <Fr *combinaison*> /n pl *-aat*/ (women's) slip, petticoat.

ك م ب و ت

كمبوت *komboot* <Fr> /n pl *-aat*/ compote.

ك م ب ى

كمبيو *kambyu* <It *cambio*> /n/ currency exchange. *siʕr ik-kambyu* rate of exchange.

– ك م ب ى

كمبيالة *kimbiyaala, kumbiyaala* <It *cambiale*> /n pl *-aat*/ promissory note.

ك م ت ر

كمّترى *kummitra* /coll n/ pear(s). *ʃil-gawaafa l-baladi ḻli zayy il-kummitra [vendor's cry]* guavas as fine as pears! *kummitra xaffaabi* variety of hard pear.

كمّترايا *kummitraaya* /n pl *-aat, kummitraat*/ **1** /unit n/ a pear. **2** free-hanging electric light-switch.

ك م ث ر see ك م ت ر

ك م ج see ك م اج : *kimaag, kimaaga*

ك م خ

كمخ *kammax* /vi/ to become musty. *law sibna l-ɣasiil miʃ ɣeer nafiir yikammax* if we don't hang out the washing it gets musty. - vn *takmiix*; ava *mikammax*.

[1] ك م د

كمد *kamad (i)* /vt/ to sadden, grieve. *ʃil-xabar kamadna* the news filled us with sadness. - vn *kamadaan*; ava *kaamid*; pva *makmuud*.

كمدة *kamda* /n/ grief, sorrow.

كمّادة *kammaada* /n pl *-aat*/ compress. *kammaada suxna* a hot compress.

مكمّدة *mikammada* /n pl *-aat*/ compress.

انكمد *ʕinkamad* /vi/ to be saddened, be grieved. - iva *minkimid*.

اتكمد *ʕitkamad* or *ʕikkamad* = *ʕinkamad*. - iva *mitkimid*.

[2] ك م د see ك م د ى : *kumiidi*

ك م د ى
كوميديا *kumidya* <It *comedia*> /n/ comedy.
كوميدى *kumiidi* /adj/ comic. *film[i] kumiidi* a comic film.

(ك م د ى ـ)
كوميديان *kumidyaan* /n invar/ comedian.
كمدينو *kumudiinu* <It *comodino*> /n pl *kumuđinaat*/ bed-side table.

[1] ك م ر
كمر *kamar[1] (u)* /vt/ **1** to clamp (wood) for charcoal making. **2** to (partially) bury or clamp (grains, *fuul*, and the like) so as to process them by slow generation of heat. - vn *kamaraan, kamr*; ava *kaamir*; pva *makmuur*.
مكمور *makmuur* /n/ a kind of stew prepared in an earthenware pot buried in hot ashes.
مكمورة *makmuura* /n pl *makamiir*/ covered excavation in which beans etc. are slow-cooked.
كمّارة *kammaara* /n pl *-aat*/ **1** = *makmuura*. **2** charcoal kiln.
مكمرة *makmara* /n/ compost pile. *bi-niǧmil min it-tibn[i] btaaǧ il-fuul makmarit sibaax baladi* we use the bean stalks to make a compost pile for fertilizer.
اتكمر *ʔitkamar* or *ʔikkamar* /vi/ passive of *kamar[1]*. - iva *mitkimir*.
انكمر *ʔinkamar* = *ʔitkamar*. - iva *minkimir*.

[2] ك م ر
كمر *kamar[2]* <T *kemer* cf Gr *kamara*> /n/ **1** /coll/ steel beam(s), girder(s). **2** /pl also *kamar*/ broad belt of leather with pockets for keeping of valuables, money belt.
كمرة *kamara[1]* /unit n, pl *-aat*/ a steel beam, a girder.

[3] (ك م ر)
كمرة *kamira, kamara* <Engl> /n pl *-aat*/ camera.
كمرة *kamara[2]* /n pl *-aat*/ *[anat]* glans penis.

ك م ر و ش
كمروش *kamaroof* /n/ blow-job (in homosexual jargon).

ك م ر ى ر
كمريرة *kamareera* <It *cameriera*> /n pl *-aat*/ nanny, children's nurse.

ك م ر ى ن
كومارين *kumariin* /n/ artificial lavender oil.

ك م س ر ى
كمسرى *kumsari* <It *commissario*> /n pl *kumsariyya*/ conductor (of a bus, train or tram).

ك م س ى ـ
كمسيون *kumisyoon* <Fr> /n pl *-aat*/ **1** *[admin]* commission. ‖*kumisyoon ţibbi* central clinic for medical examination of government personnel, medical board. **2** *[comm]* commission.
كمسيونجى *kumisyungi* /n pl *-yya*/ salesman working on a commission basis.

ك م ش
كمش *kamaʃ (i, u)* /vt/ **1** to grab, take hold of. *kamaʃ-u min raqabt-u* he grabbed him by the throat. **2** to cause to cower, make shrink. *zaǧaq fii kamaʃ-u* by yelling at him he made him cower. — /vi/ **3** to shrink, cower. - vn *kamaʃaan*; ava *kaamif*; pva *makmuuf*.
كمّاشة *kammaaʃa* /n pl *-aat*/ pair of tongs, pincers.
اتكمش *ʔitkamaʃ* or *ʔikkamaʃ* /vi/ **1** to be grabbed. **2** to be made to cower. **3** to cower, shrink, contract. *ʔitkamaʃ fi-rukn-u w-naam* he withdrew into his corner and slept. - ava/iva *mitkimif*.
انكمش *ʔinkamaʃ* = *ʔitkamaʃ*. - vn *ʔinkimaaf*; ava/iva *minkimif*.

ك م ل
كمل *kimil (a)* /vi/ to become complete, become perfect. *kimlit farħit il-ǧaruusa* the happiness of the bride became complete. *ʔahu l-qamiiş wiz-zaraayir kamla* here's the shirt with all its buttons. *ʔil-ħilw[i] ma-yikmal-ʃ [prov]* nothing can be perfect. - vn *kamaal*; ava *kaamil*.
كمال *kamaal* /n/ perfection. *ʔik-kamaal li-llaah* perfection belongs to God (alone). ‖*sitt[i] şaħbit ʔadab wi-kamaal* a real lady.
كمالى *kamaali* /adj/ luxury, non-essential.
كماليّات *kamaliyyaat* /n pl/ non-essentials, luxuries. ‖*ʃaqqa bil-kamaliyyaat* a well-appointed flat.
كامل *kaamil* /adj/ complete, perfect. *dayra kamla* complete circle. *muslim kaamil* a perfect Muslim. ‖*kaamil in-nuur* epithet of the Prophet Muhammad. - *bi-kaamil il-qudra* at full capacity. - *bil-kaamil* in toto.
كمالة *kimaala* /n pl *-aat*/ balance, complement, supplement. *kimaalit il-kimmiyya* the make-weight. ‖*kimaalit ǧadad* useless or inconsequential person or persons.
كمّل *kummal* /adj invar/ well-bred, genteel. *sitt[i] kummal* a real lady.
أكمل *ʔakmal[1]* /el/ more/most complete or perfect. *ǧala ʔakmal wagh* in the best possible way.

كمّل *kammil* /vt/ **1** to complete, finish. *laazim nikammil il-mafawiir* we must finish (our) errands. *kammil ʕakl-ak baʕdeen* finish your food later on. *ʕaayiz ʕakammil kalaam-i* I want to finish what I'm saying. ‖ *kammil gimiil-ak* (if you do someone a favour) do it all the way. - *ħ-akammil ʕafaa-ya noom* I'll go without supper. - *kammil nuṣṣ[i] diin(-u)* to get married (of a man). **2** to make up, add up to, make complete. *ʕil-fakka lli mʕaaya ma-tkammil-f[i] gneeh* I don't have a pound's worth of change on me. — /vi/ **3** to keep on (toward a conclusion). *nikammil bi-nafs iṭ-ṭariiqa lli faatit* we carry on as before. *yikammil gary* he continues running. *ma-tkammil-f - ʕana ʕarfa l-ħikaaya kull-a-ha* don't go on, I know the whole story. - vn *takmiil*; ava/pva *mikammil, mukammil*.

تكميلي *takmiilii*↑ /adj/ complementary, supplementary. *ʕaawiz sanateen diraasa takmiliyya* I need two years of supplementary study.

تكملة *takmila* /n pl *-aat*/ supplement.

اتكمّل *ʔitkammil* or *ʔikkammil* /vi/ **1** to be completed, be finished. **2** to be made up, be made complete. - iva *mitkammil*.

أكمل *ʔakmal*[2]↑ = *kammil*. - vn *ʔikmaal*.

اكتمل *ʔiktamal*↑ /vi/ to become complete. - vn *ʔiktimaal*; ava *miktimil, muktamil*.

استكمل *ʔistakmil* /vt/ **1** to make up for a lack of. *fii ħagaat naqṣa mafruuḍ nistakmil-ha* there are things missing which we should replace. **2** to complete, fulfil. *wizaarit iṣ-ṣiħħa b-tiddii-k furṣa l-istikmaal if-furuuṭ* the Ministry of Health gives you an opportunity to fulfil the conditions. - vn *ʔistikmaal*; ava *mistakmil*.

ك م ل ى

كملية *kamilya* /n/ camellia.

ك م م [1]

كمّ *kumm* /n pl *ʔakmaam, kimaam*/ sleeve. *ʕamiiṣ bi-nuṣṣ[i] kumm* a short-sleeved shirt. ‖ *ħarakaat in-nuṣṣ[i] kumm* a con game.

كمامة *kimaama* /n pl *-aat, kamaayim*/ **1** (face) mask. **2** gag. **3** muzzle.

كمّم *kammim* /vt/ **1** to gag. **2** to muzzle. - vn *takmiim*; ava/pva *mikammim*.

اتكمّم *ʔitkammim* or *ʔikkammim* /vi/ **1** to be gagged. **2** to be muzzled. - iva *mitkammim*.

ك م م [2] see ك م: *kimmiyya, kammiyya*

ك م م ث ر see ك م ت ر

ك م ن [1]

كمن *kaman (i)* /vi/ to set an ambush, lie in wait. *ʔaggar-lu ʕṣaaba kamanit-li fil-ħaara* he hired a gang to lie in wait for me in the alley. - vn *kumuun*; ava *kaamin*.

كامن *kaamin* /adj/ latent, inherent.

كمين *kamiin* /n pl *kamaayin*/ ambush.

مكمن *makman* /n pl *makaamin*/ lair. ‖ *makman if-farr* source of evil.

ك م ن [2]

كمّون *kammuun* /n/ cumin.

كمّونيّة *kammuniyya* /n/ a dish of meat prepared with cumin.

ك م ن [3] see ك م ا ن: *kamaan*

ك م ن ج see also ك م ا ن [2]

كمانجة *kamanga* <P *kamâncha*> /n pl *-aat*/ violin.

كمانجاتي *kamangaati* /n pl *-yya*/ *[deris]* violinist.

ك م ن د

كومندة *kumanda* <perh It *comando*> /masc n pl *-aat*/ **1** (ship's) captain. **2** boss.

ك م ن د –

كمندان *kumandaan, kumundaan, kumindaan* <Fr *commandant*> /n pl *-aat*/ **1** ship's captain. **2** commanding officer.

ك م و see ك م ى: *kimaawi, kimawiyyaat*

ك م ى

كيمياء *kimya* /n/ chemistry.

كماوى *kimaawi* **1** /adj/ chemical. *bi-ynaḍḍafu l-faḍḍa l-miʕaksida b-mawadd[i] kimawiyya* they clean tarnished silver with chemical preparations. **2** /n */ chemist. **3** /n, no pl/ chemical fertilizer. *maṣnaʕ kimaawi* chemical fertilizer factory.

كيماويّات *kimawiyyaat* /pl n/ chemicals.

ك م ى و ن

كميون *kamyoon* <Fr *camion*> /n pl *-aat*/ lorry, truck.

ك ن ا ر

كنار *kinaar* <P *kinâr*> /n pl *-aat*/ trimming (on the edge of a garment).

ك ن ا ف

كنافة *kunaafa* /n pl *-aat*/ fresh fine noodles used as the basis for a pastry of the same name, often stuffed with

nuts, baked with butter and soaked in syrup or honey.
كنافاية *kunafaaya* /unit n, pl *-aat*/ piece of *kunaafa*.
كنافاني *kanafaani, kunafaani* /n pl *-yya*/ one who makes and sells *kunaafa*.
كنفاتي *kunafaati* /n pl *-yya*/ = *kanafaani*.

ك ن ا ل
كنال *kanaal* <Fr>: *kanaal is-siwees* or *ʃil-kanaal* the Suez Canal. - also *qanaal*.

ك ن ب
كنبة *kanaba* <Fr *canapé*> /n pl *-aat*/ sofa. *kanaba baladi* ottoman. *kanaba studyu* (or *ʃafrangi*) studio couch.
كنب *kanab* /coll n/ sofa(s).

ك ن ت
كنت *kint* /n pl *-aat*/ run, straight (in cards). *kint[i] ryaal* royal flush.

ك ن ت ا ك
كنتاك *kuntaak* <Fr *çontact*> /n/ *[mech]* ignition. - also *kuntakt*.

ك ن ت ر [1]
كنتر *kantar* /vt/ **1** to stand (s.o.) up. *baʕd[i] kull ik-kalam-da kantar-ni* after all that talk he stood me up! **2** to do or perform in a slipshod manner. *ʃil-mikaniiki bn ik-kalb[i] kantar ʕamaliyyit ẓabṭ il-ʃazbarateer xaaliṣ* the s.o.b. of a mechanic did a lousy job when he set the distributor. - vn *kantara*; ava/pva *mikantar*.
اتكنتر *ʃitkantar* or *ʃikkantar* /vi/ passive of *kantar*. - iva *mitkantar*.

ك ن ت ر [2]
كنترجي *kuntargi* <T *kunduracı*> /n pl *-yya*/ *[obsol]* shoemaker, cobbler. - also *kundargi*.

(ك ن ت ر -)
كنتراتو *kuntaraatu, kunturaatu* <It *contratto*> /n pl *kuntarataat, kuntaratuhaat, kunturataat, kunturatuhaat*/ contract. *maḍḍuu-ni ʕal-kuntaraatu btaaʕ if-faqqa* they made me sign the lease for the apartment.
كنترباس *kuntirbaas* <Fr *contrebasse*> /n pl *-aat*/ *[mus]* contrabass.
كنتربولتي *kuntrubulti* <It *contrappunto*> /n/ *[mus]* counterpoint.
كنترول *kunturool* <Fr *contrôle*> /n/ **1** office within a university for administering and registering examinations. **2a** point at which tickets are collected and checked at an entrance door. **2b** an official of a private club who checks membership cards and issues tickets to visitors. **3** point at a shop exit at which goods are handed over to the customer against receipts for money paid. **4** any kind of check-point.

ك ن ت ك ت
كنتكت *kuntakt* <Fr *contact*> /n/ *[mech]* ignition. - also *kuntaak*.

ك ن ت و
كنتو *kantu* <It *canto* corner> /n/ junk. *suuq il-kantu* flea market.

ك ن ت ي ر
كنتير *kantiir* /n pl *-aat*/ **1** kind of high-pitched drum. **2** silk or metal-spun *ʕuud* string(s). *kantiir ḥuseeni* (pair of) A strings.

ك ن ت ي س
كونتيسة *kunteesa* <It *contessa*> /n pl *-aat*/ countess.

ك ن ت ي ن
كنتين *kantiin* <Engl> /n pl *-aat*/ **1** canteen, refreshment counter. **2** (water) canteen.

(ك ن ج)
كنجة *kinja[1]* /n pl *-aat*/ pentagonal panel used in *ḥaʃw[i] baladi* (see Pl.G, 11).
كنجة *kinja[2]* /n pl *-aat, kinag*/ (pair of) football boots.

ك ن ج ر و
كنجرو *kangaruu* <Engl> /n pl *-aat*/ kangaroo.

(ك ن ج ي)
كنجي *kingi[1]* <T *ikinci*> /n/ second one in a series.
كنجي *kingi[2]* <perh Engl *king*> /n/ breed of pigeon with long legs and a short body.

ك ن د ر
كندر *kundara* <T *kundura*> /n pl *kanaadir*/ *[obsol]* (pair of) shoes.
كندرجي *kundargi* <T *kunduracı*> /n pl *-yya*/ shoemaker, cobbler. - also *kuntargi*.

ك ن د ن -
كندنسر *kundinsar* <Engl> /n pl *-aat*/ condenser.

ك ن د و ز
كندوز *kanduuz* /n/ meat from a mature buffalo or cow.

ك ن ر see ك ن ا ر : *kinaar*

ك ن ر ي ا
كناريا *kanarya* <Fr *canari*> **1** /n pl *-aat*/ canary. **2** /adj invar/ canary-yellow.

ك ن ز [1]
كنز *kanaz[1] (i)* /vt/ to hoard (money). - vn *kanazaan, kanz*; ava *kaaniz*; pva *maknuuz*.
كنز *kinz, kanz* /n pl *kunuuz*/ treasure.
كنزي *kunazi* /n pl *-yya*/ miser, one who hoards money. *maal ik-kunazi lin-nuzahi [prov]* ≈ what the miser hoards his heir will squander.
اتكنز *ʔitkanaz* or *ʔikkanaz* /vi/ to be hoarded. - iva *mitkiniz*.
انكنز *ʔinkanaz* = *ʔitkanaz*. - iva *minkiniz*.

ك ن ز [2]
كنز *kanaz[2] (i)* /vi/ to shrink (of cloth). - vn *kanazaan*.
كنز *kiniz* /adj */ **1** narrow. *faariʕ kiniz* a narrow street. **2** stocky (of a person).
أكنز *ʔaknaz* /el/ more/most narrow.
كنز *kanniz* /vt/ to make narrow. - vn *takniiz*; ava *mikanniz*.
اتكنز *ʔitkanniz* or *ʔikkanniz* /vi/ to be made narrow. - iva *mitkanniz*.

ك ن س [1]
كنس *kanas, kanas (u, i)* /vt/ to sweep. *ʔiz-zabbaal bi-yiknis iz-zibaala* the garbage man sweeps up the garbage. *ʔuknus beet-ak wi-ruff-u - ma-tiʕraf miin yixuff-u [prov]* sweep and sprinkle your house - you never know who may enter it. - vn *kans, kans, kaniis*; ava *kaanis, kaanis*; pva *maknuus*.
كنسة *kansa* /n pl *-aat*/ **1** instance noun of *kans*. **2** ritual of sweeping a saint's tomb as an act of devotion.
كناسة *kunaasa* /n/ sweepings. *kunaasit if-faariʕ* street-sweepings.
كنّاس *kannaas* /n * and pl *kannaasa*/ street sweeper.
مكنسة *maknasa, muknisa* /n pl *makaanis*/ broom. *maknasa kahraba* vacuum cleaner. ‖ *nawwit il-muknisa* and *nawwit baaqi l-muknisa* see *nawwa*.
اتكنس *ʔitkanas* or *ʔikkanas* /vi/ to be swept. - iva *mitkinis*.
انكنس *ʔinkanas* = *ʔitkanas*. - iva *minkinis*.
كنّس *kannis* = *kanas*. - vn *takniis*; ava/pva *mikannis*.
اتكنّس *ʔitkannis* or *ʔikkannis* = *ʔitkanas*. - iva *mitkannis*.

ك ن س [2]
كنيسة *kiniisa* /n pl *kanaayis*/ church. *ʕaalu ya kniisa ʔislimi. - ʕaalit ʔilli fil-ʕalb[i] fil-ʕalb [prov]* (they said to the church, 'Become Muslim.' She said, 'What is in the heart is in the heart.') ≈ you can change what I say but not what I think.
كنايسي *kanaysi* /n/ type of *mafrafiyya* design (see Pl.G, 8).
كنسي *kanasi* /adj */ of or pertaining to the church, ecclesiastical. *ʔil-qanuun il-kanasi* canon law.

ك ن س ت –
كونستبل *kunstabl* <Engl *constable*> /n pl *-aat*/ mounted policeman, motor-cycle policeman.

ك ن س ل
كنسل *kansil* <Engl> /vt/ to cancel. *kansil il-maʕaad il-lelaa-di* cancel tonight's appointment. ‖ *ma-tduqq[i]-f ʕala kalam-ha - kansil* don't fret about what she says - forget about it! - vn *kansala*; ava/pva *mikansil*.
اتكنسل *ʔitkansil* or *ʔikkansil* /vi/ to be cancelled. - iva *mitkansil*.

ك ن س ل –
كونسلتو *kunsultu* <It *consulto*> /n pl *-haat*/ group of medical specialists (called together to make a joint diagnosis).

ك ن ص و ل
كنصول *kunṣool* <Fr *console*> /n pl *-aat*/ console table.

ك ن ف [1]
كنيف *kiniif, kaniif* /n pl *-aat*/ *[trad.soc]* toilet, lavatory.

ك ن ف [2] see ك ن أ ف : *kunaafa, kunafaaya, kanafaani, kunafaani, kunafaati*

ك ن ف ا ه
كنفاه *kanavaah* <Fr *canevas*> /n/ embroidery canvas. *fuxl[i] kanavaah* needlepoint work, tapestry work.

ك ن ك
كنكة *kanaka* <T *teneke*> /n pl *-aat*/ pot for brewing Turkish coffee (see Pl.B, 3).
كنك *kanak* /coll n/ **1** pots for brewing Turkish coffee. **2** large metal containers for liquids.
مكنّك *mikannik* /adj */ crammed together in a disorderly fashion. *kutub mikannika f-fanṭa* books crammed together into a bag.

ك ن ك ن [1]
كنكن *kankin*[1] /vi/ to stay at home. - vn *kankana*; ava *mikankin*.

ك ن ك ن [2]
كنكان *kunkaan* /n/ rummy (card game).
كنكن *kankin*[2] /vi/ to win a hand of rummy. - vn *kankana*; ava *mikankin*.

ك ن ل see ك ن ا ل : *kanaal*

ك ن ن [1]
كنّ *kann (i)* /vt/ **1** to hide away, shut away (s.o.). *kinn*[i] *bint-ak fil-beet* keep your daughter at home! **2** *[non-Cairene]* to hide away, shut away (s.th.). - vn *kann*; ava *kaanin*; pva *maknuun*.
الكنانة *ʔil-kinaana* /prop n/ epithet for the land of Egypt.
انكنّ *ʔinkann* /vi/ **1** to be hidden away, be shut away. **2** to calm down, settle down. *ma tinkann*[i] *ya waad l-alʈuf-ak ɛala buuz-ak* shut up and settle down, kid, or I'll whack you one on the snout! - ava/iva *minkaan*.
اتكنّ *ʔitkann* or *ʔikkann* = *ʔinkann*. - ava/iva *mitkann*.
مستكنّ *mustakinn* /adj/ *[path]* latent.

ك ن ن [2] see ك ن و ن : *kanuun*

ك ن ن [3] see ك ن ى ن : *kiniin*

ك ن ه
كنه *kunh*↑ /n/ true nature, essence.

ك ن و ن
كانون *kanuun* /n pl *kawaniin*/ clay or mud-brick hearth for cooking. *rakkibu l-kahraba w-baʈʈalu l-kanuun* they installed electricity and stopped using the open hearth.

ك ن ى
كنية *kunya* /n pl *-aat*/ respectful form of address or reference compounded of *ʔabu* (for males) or *ʔumm* (for females) and the name of the father or eldest son (or, especially in the case of women who have no sons, the name of the eldest daughter). *ʔumm" mḥammad* the mother, or daughter, of Muhammad. *ʔabu saalim* the father, or son, of Salim. ‖*raagil ma-luu-ʃ kunya* a worthless man.
كناية *kinaaya* /n pl *-aat*/ metaphor. ‖*bi-yitkallim bil-kinaaya* he beats about the bush, he speaks indirectly. ¶ *kinaaya ɛan* tantamount to.

ك ن ى ا ك
كونياك *kunyaak* <Fr *cognac*> /n/ cognac, brandy.

ك ن ى ن
كنين *kiniin* <Fr> /n/ quinine.

ك ه ر ب
كهرب *kahrab* /vt/ **1** to electrify, apply electricity to. **2** to shock, electrify. ‖*kahrabt*[i] *kuuɛ-i* I hit my funny bone. **3** to thrill, electrify. - vn *kahraba*; ava/pva *mikahrab*.
كهربا *kahraba* /n/ electricity. *ɤassaala bil-kahraba* an electric washing machine. *ʔir-raagil bitaaɛ il-kahraba* the electricity man.
كهربى *kahrabi*↑ /adj/ electric, electrical.
كهربائى *kahrabaaʔi, kahrubaaʔi* **1** /adj/ electrical. *ʔit-tawṣiila l-kahrabaʔiyya* the electrical connection. **2** /n pl *-yya*/ electrician. *ʔil-ɛidda lli b-yistaɛmiluu-ha l-kahrabaʔiyya* the equipment which electricians use.
اتكهرب *ʔitkahrab* or *ʔikkahrab* /vi/ passive of *kahrab*. - iva *mitkahrab*.

(ك ه ر م -)
كهرمان *kahramaan* /n/ amber.
كهرومغناطيسى *kahrumaɤnaʈiisi*↑ /adj */ *[phys]* electromagnetic.

ك ه ف
كهف *kahf*↑ /n pl *kuhuuf*/ cavern, cave.

ك ه ل
كهل *kahl* /adj pl *kuhuul*/ middle-aged.
كهولة *kuhuula* /n/ old age.

ك ه ن [1]
كهنة *kuhna* <P *kuhna*> **1** /coll n/ scrap, junk, rags. ‖*ḥabl*[i] *kuhna* old rope. **2** /n pl *-aat, kuhan*/ a rag.
كهّن *kahhin* /vt/ to scrap, throw out. - vn *takhiin*; ava/pva *mikahhin*.
اتكهّن *ʔitkahhin* or *ʔikkahhin* /vi/ to be scrapped, be thrown out. - iva *mitkahhin*.

ك ه ن [2]
كهن *kuhn* /n/ (womanly) guile.
كهانة *kahaana* /n/ (womanly) guile.
كهين *kahiin* /adj pl *kuhana*/ guileful, wily. see further under ك ه و ن
أكهن *ʔakhan* /el/ more/most guileful.
كاهن *kaahin* /n pl *kahana*/ **1** priest. **2** soothsayer, seer.
كهنوت *kahanoot* /n/ **1** priesthood, holy orders.

tinçisim rutab il-kahanoot ʕila sabaʒ daragaat the ranks of the priesthood are divided into seven grades. **2** pontificating dogmatism, punditry.
اتكهّن *ʕitkahhin↑* or *ʕikkahhin↑* /vi/ to make predictions. - vn *takahhun*; ava *mitkahhin*.
تكهّن *takahhun* /n pl *-aat*/ prediction, prophecy.

ك ه و ن see also ك ه ن [2]
كهون *kahwin* **1** /vt/ to make (s.o.) sly, wily or guileful. **2** /vi/ to become sly, wily or guileful. - vn *kahwana*; ava/pva *mikahwin*.
اتكهون *ʕitkahwin* or *ʕikkahwin* /vi/ to become or be made sly, wily or guileful. - ava/iva *mitkahwin*.

ك و ا
كوا *kawa'*: such expressions as *ʕil-ʒaruusa n-nuusa kawa n-nuusa* ≈ bridey-widey. *ya ʒaziiza n-niiza kawa n-niiza* lovey-dovey Aziza.

ك و ب
كوب *kuub* <Fr *coupe*> /n pl *ʕakwaab*/ **1** bell-shaped lamp shade. **2** suit-length (of material).

ك و ت
الكوتة *ʕil-kuuta: ţafaḥ* (or *ţaraf* or *ʃirib) il-kuuta* to work oneself to exhaustion. *ḥ-aţaffaḥ-ak il-kuuta* I'll give you a hard time! *ma-ḥilt-uu-ʃ il-kuuta* he hasn't a penny to his name.

ك و ت ر
كوتر *kootar* <Engl> /n pl *kawaatir*/ *[naut]* cutter.

ك و ت ش
كاوتش *kawitʃ* <It *caucciù*> /coll n/ **1** rubber. **2** (loosely) anything made of rubber. *kawitʃ il-ʒarabiyya* automobile tyres. *(gazma) kawitʃ* gym shoes.
كاوتشة *kawitʃa* /unit n, pl *-aat*/ piece of rubber.
كاوتشاية *kawitʃaaya* = *kawitʃa*.

ك و ت ش –
كاوتشوك *kawitʃuuk* = *kawitʃ*. *ʕir-raagil ik-kawitʃuuk* contortionist (circus act).

ك و ح see ق و ح : *kaawiḥ*

ك و خ
كوخ *kuux* /n pl *ʕakwaax*/ shack, hut.

ك و د [1]
كود *kuud* <Engl> /n pl *-aat*/ code.
كودى *kuudi* /adj/ in code, coded.

ك و د [2] see ك د ى : *kudya*

ك و ر [1] see also ك ر
كورة *koora* /n pl *-aat, kuwar, kiwar*/ **1** ball. *koora ţibbiyya* medicine ball. *koora faraab* ball made of socks or rags used in street soccer games. *koora ţayra* volleyball. **2** *[sport]* ball play. *koora ḥilwa* (or *saliima*) good play. *koora ţawiila* long shot (soccer). *koora saqţa* drop shot (tennis).
كوّر *kawwar* /vt/ **1** to make into a ball, make round. *kawwar il-ʒagiina* he shaped the dough into a ball. ‖*ḍarba tkawwar ʒenee* a blow which will make his eyes puffy. **2** to clench. *kawwar ʕiid-u* he clenched his fist. — /vi/ **3** to become ball-shaped or round. **4** to become clenched. *baʒd il-ʕakl[i] maṣariin-i tkawwar* after eating, my intestines knot up. - vn *takwiir*; ava/pva *mikawwar*.
تكويرة *takwiira* /pl *-aat*/ instance noun of *takwiir*.
اتكوّر *ʕitkawwar* or *ʕikkawwar* /vi/ **1** passive of *kawwar* 1 and 2. **2** to curl up, assume a round shape. *ʕitkawwar fis-siriir* he curled up in bed. - ava/iva *mitkawwar*.

ك و ر [2]
كور *koor* <Fr *corps*> /n/ *[print]* unit of type size (according to Didot points).
كور *kuur* /n pl *ʕakwaar, kiraan*/ (blacksmith's) bellows.

ك و ر [3] see ك ا ر : *kaar, kaara*

ك و ر ت
كورتة *kawirta* <It *coperta*> /n pl *-aat*/ **1** deck. **2** awning (on a boat).

ك و ر س
كورس *kooras* <Engl> /n/ chorus.

ك و ر ك
كورك *kawirk* /adj invar/ *[mil slang]* raw, green (of a recruit).

ك و ز
كوز *kuuz* /n pl *kizaan, ʕakwaaz*/ **1** tin mug, pitcher or old can used as a vessel for water. *ya raagil ya ʒaguuz manaxiir-ak ʂadd ik-kuuz [children]* ≈ you silly old man with a nose as big as a billy can (a mocking chant). ‖*kuuz il-ʒasal* variety of melon, egg-shaped and resembling the cantaloupe in colour, size and taste. **2** (also *kuuz dura*) ear of maize. ‖*ḥalaqt[i] b-kuuz dura*

your haircut is dreadful. **3** (also *kuuz tiin*) prickly pear. see further under ك ز ن

[1] ك و س

كوسة *koosa, kuusa* /n/ **1** /coll/ zucchini, courgette(s). **2** operating through connections and bribery. *fuxl il-koosa* use of connections and bribery.

كوسايّة *kusaaya* /unit n, pl *-aat*/ a zucchini, a courgette.

كوّس *kawwis* /vt/ to make progress in (a situation) by the use of connections and bribes. *laazim tikawwis il-ʤamaliyyaa-di ʕafaan timfi* you've got to work with connections and bribes in this thing in order to get it moving. - vn *takwiis*; ava/pva *mikawwis*.

اتكوّس *ʔitkawwis* or *ʔikkawwis* /vi/ passive of *kawwis*. *ʔil-mawquuʕ itkawwis* the matter was handled by means of connections and greasing palms. - iva *mitkawwis*.

[2] ك و س see **[2] ك ى س** : *kawaasa, kuwayyis, kiwayyis*

ك و ش

كوشة *kooʃa* <perh P *gosha*> /n pl *kuwaʃ, koʃaat*/ **1** dais on which bride and groom sit during a wedding celebration. **2** rubber block or clamp on a bicycle brake, brake-block. **3** small ring connecting items of jewelry. **4** hook and eye. **5** burner (of a primus stove).

كوّش *kawwiʃ* /vi/ to take exclusive possession, gain a monopoly. *ʔit-tuggaar ik-kubaar bi-ykawwiʃu ʕala t-tamwiin* the big merchants make a corner in rationed goods. - vn *takwiiʃ*; ava *mikawwiʃ*.

تكويشة *takwiiʃa* /pl *-aat, takawiiʃ*/ instance noun of *kawwiʃ*.

اتكوّش *ʔitkawwiʃ* or *ʔikkawwiʃ* /vi/ (impersonal) passive of *kawwiʃ*. *ʔil-ʔakl itkawwiʃ ʕalee* the food has been appropriated. - iva *mitkawwiʃ*.

ك و ع

كوع *kuuʕ* /n pl *kiʕaan*/ **1** elbow. ‖*kuuʕ riʁiif* end of a loaf, heel of a loaf. - *ma-yiʕraf-ʃ[i] kuuʕ-u min buuʕ-u* ≈ he cannot discriminate. - *saqeet-u l-murr[i] min kiʕaan-u* ≈ I gave him a hard time. **2** elbow bend, elbow joint (of a pipe etc.). **3** bend, curve (in a road).

كوعة *kuuʕa* /n pl *-aat*/ = *kuuʕ*.

كوّع *kawwaʕ* /vt/ **1** to bend into the shape of an elbow. — /vi/ **2** to curl up, take a nap. **3** to fail (in an examination). - vn *takwiiʕ*; ava/pva *mikawwaʕ*.

تكويعة *takwiiʕa* /n pl *-aat, takawiiʕ*/ elbow bend, elbow joint (of a pipe, and the like).

اتكوّع *ʔitkawwaʕ* or *ʔikkawwaʕ* /vi/ to be bent into the shape of an elbow. - iva *mitkawwaʕ*.

ك و ف

كوفى *kuufi: (xaʈʈ[i]) kuufi* Kufic script (characterized by straight lines and angles as opposed to the cursive script).

كوفيّة *kufiyya* /n pl *-aat*/ **1** kaffiyeh. **2** (man's) scarf.

ك و ف ى ر

كوافير *kawafiir↓, kuwafeer* <Fr *coiffeur*> /n pl *-aat*/ hair stylist.

ك و ك

كوك *kuuk* <Engl>: *faḥm[i] kuuk* coke.

ك و ك ب

كوكب *kawkab* or *kookab* /n pl *kawaakib*/ heavenly body, star, planet. ‖*kawkab ʃis-siima* film star. - *kawkab if-farq* epithet for the late Umm Kalthum.

[1] ك و ل

أكول *ʔakwal* /adj, fem *koola*, pl *kuul*/ yellowish (of the plumage of a certain variety of tumbler pigeon).

[2] ك و ل

كول *koolʈ* <Fr *col*> /n pl *-aat*/ collar. *kool faal* shawl collar. *kool kuludiin* Peter Pan collar.

كولة *koola* /n pl *-aat*/ collar.

ك و ل ن – see **[1] ك ل و ن** : *kawalingi*

ك و ل ى س

كواليس *kawaliis* <Fr *coulisse*> /pl n/ *[theat]* backdrops. *wara l-kawaliis* backstage.

ك و م

كوم *koom* /n pl *ʔakwaam, ʔikwaam, kuwaam*/ pile, heap. *ʕandi fuxl ikwaam* I have piles of work (to do). *bil-koom* in quantity, in abundance. ‖*raagil ɣalbaan fi-raqabt-u koom laḥm* a poor man with a lot of children to support. - *ʔinta faakir bi-ngiib-u min ʕal-koom* ≈ do you think we get it for nothing? do you think it grows on trees? - *kubr ik-koom wala famaatit il-ʕadiwwiin [prov]* ≈ better to make a show than be gloated over by your enemies. - *da koom wi-da koom* these are two entirely different things, as in *ʔir-rafwa koom wil-maḥsubiyya koom* bribery is a far cry from favouritism, *kull il-ʔasbaab di koom wi-ʔinnak ma-git-ʃ[i] koom* all these reasons have nothing to do with the fact that you didn't come.

كومة *kooma* /n pl *-aat*/ pile, heap.

كوّم *kawwim* **1** /vt/ to heap in piles, pile. *niḥammil il-ɣamḥ[a] ɛag-gimaal wi-nkawwim-u fil-gurn* we transport the wheat by camel and pile it up on the threshing floor. ‖ *ḍarab-u ɛalɣa kawwim-u* he floored him. **2** /vi/ to pile up, accumulate. *ʕif-fuxl[i] mkawwim ɛalayya* work is piling up on me. -vn *takwiim*; ava/pva *mikawwim*.

اتكوّم *ʔitkawwim* or *ʔikkawwim* /vi/ to pile up, be accumulated. *kaan ḥaqq-i ṭaradt-u-hum ʔawwil ma tkawwimit il-ʔugra ɛaleehum* I should have thrown them out as soon as their back rent began to accumulate. -ava *mitkawwim*.

ك و م ى

كومى *koomi* /n/ **1** an Egyptian card game (known also as *baṣra*, q.v., and *ʔil-waad yiquff*). **2** seven of diamonds.

ك و ن

كان *kaan (u)* /vi; the following variants frequently occur: 1st sing *kutt*, 2nd sing masc *kutt*, 2nd sing fem *kutti*, 2nd pl *kuttu*, 3rd sing fem *kaat*/ **1** to be, exist. *da zayy illi ykuun beeni w-beenu taar* he acts as if there were a feud between us. *koon-i ʔaqɛ̣ud quddaamak da miʃ ɛeeb* the fact of my sitting in front of you is not wrong. *koon iʃ-ʃiik fi-ʔiid-i da ma-ỳikfii-ʃ* the cheque's being in my hand is not enough, ‖ *ʔayyuha maxluuqin kaan* any human being. - *ʔilli kaan kaan* what's done is done (and cannot be undone). **2a** /with copulative function/ to be. *ḥayat-ha maɛaa ḥa-tkuun saɛiida* her life with him will be happy. *ʔiza kaan da ṣaḥiiḥ* if this is right. **2b** to be situated (in place or time). *ʔil-beet bitaaɛ-u kaan gamb[i] bet-na* his house was next to ours. **3** auxiliary verb in perfect tense to form **3a** pluperfect. *kaan ɛamal il-waagib lamma ruḥt-i-lu* or *kaan ɛaamil il-waagib lamma ruḥt-i-lu* he had done his homework when I went to see him. **3b** continuous or habitual past. *kaan bi-yiɛmil il-waagib lamma ruḥt-i-lu* he was doing his homework when I went to see him. *kaan bi-yiɛmil il-waagib lamma kunt[i] b-aruḥ-lu* he usually did his homework when I went to see him. **3c** inchoative future. *kaan ḥa-yiɛmil il-waagib lamma ruḥt-i-lu* he was going to do his homework when I went to see him. **3d** a hypothetical past conditional. *law kunt[i] giit* if you had come. *law kunt[i] f-makaan-ak* if I had been you. **4** auxiliary verb in the imperfect tense to form **4a** future perfect. *ḥa-ykuun ɛamal il-waagib lamma ʔaruḥ-lu* or *ḥa-ykuun ɛaamil il-waagib lamma ʔaruḥ-lu* he will have done his homework when I go to see him. **4b** habitual future perfect. *bi-ykuun ɛamal* (or *ɛaamil*) *il-waagib lamma b-aruḥ-lu* he will usually have done his homework when I go to see him. **4c** continuous or habitual future. *ḥa-ykuun bi-yiɛmil il-waagib lamma ʔaruḥ-lu* he will be doing his homework when I go to see him. *bi-ỳkuun bi-yiɛmil il-waagib lamma b-aruḥ-lu* he will usually be doing his homework when I go to see him. **4d** hypothetical future conditional. *law tikuun ḥa-tiigi* if you were to come. -vn *koon*; ava *kaayin*.

كون *koon* **1** /n pl *ʔakwaan*/ cosmos, universe. *ya-xi ɛaayiz tiṣallaḥ il-koon* well my friend, do you want to reform the world?! **2**: *ragiiɛ ik-koon* rice husks.

كونى *kooni, kawni* /adj/ cosmic. *ʔaʃiɛɛa kawniyya* cosmic rays.

كائن *kaaʔin* /n pl *-aat*/ being, creature. *kull[i] kaaʔin ḥayy* every living creature.

كيان *kayaan, kiyaan* /n/ identity. *min yoom ma gibt-i-lak siirit xaḍra ʔinqalab kayaan-ak* ever since I told you all about Khadra you've been a different person. ‖ *bi-yuʃɛur bi-kayaan-u maɛaak* he feels important when he's with you. - *baqaa-li kayaan* I felt important. - *raagil lu kayaan fil-mugtamaɛ* a man of standing in society. - *raagil maali kayaan-u* a man worthy of his position.

مكان *makaan* /n pl *ʔamaakin*/ place, locality, area. *ḥa-nxaṣṣaṣ makaan mustaqill[i] lil-busṭa* we'll allot a separate place for the mail. *ʔiɛdil il-ḥaaga makan-ha* put the thing in its (proper) place. *xud makaan-ak [athl]* on your mark! *bi-yiɛraf makan-ha* he knows where she is. *law kunt[i] makaan-ak* if I were (or, had been) in your place. *ʔiɛraf makaan-ak* know your place!

مكانة *makaana* /n/ (high) position, standing, rank.

كوّن *kawwin* /vt/ to give existence to, form. *ɛaayiz ʔakawwin firqa musiqiyya* I want to set up a musical troupe. *ʔif-fubbaan illi zayy[i] ḥalat-na lissa bi-ykawwinu nafs-u-hum* young men like us are still seeking to establish themselves. -vn *takwiin*; ava *mikawwin*; pva *mukawwan, mikawwan*.

تكوين *takwiin* /n/ composition, formation. *takwiin il-ʔarḍ* composition of the earth. ‖ *sifr it-takwiin* the Book of Genesis.

مكوّن *mikawwin* /n pl *-aat*/ component, ingredient, constituent.

اتكوّن *ʔitkawwin* or *ʔikkawwin* /vi/ to be formed, be made up. -iva *mitkawwin*.

استكان *ʔistakaan* /vi/ to resign oneself. *ʔistakaanit lil-waḍɛ* she resigned herself to the situation. -vn *ʔistikaana*; ava *mistakiin*.

ك و ه

كوه *kuuh* <Fr *coup*> /n pl *-aat*/ turn, go (in cards).

‖*ma txuff*^{i} *maʕaana fik-kuuh* do join us! - *ʔinta miʃ maʕaana fik-kuuh* you don't follow us, you're not in tune with us.

ك و ى

كوى *kawa (i)* /vt/ **1** to iron, press. *min ʔimta kunti b-tikwi l-milayaat* since when have you been ironing sheets? **2** to straighten (hair) with curling tongs. **3** to mark by burning, brand. **4** to burn out, cauterize. *ʔiʃ-faṭṭa tikwi ġ-garḥ* chilis cauterize the wound. **5** to sting, burn. *ʕamal fiyya faṣl*^{i} *kawaa-ni* he played a dirty trick on me. - vn *kawy, kawa, kayy, kawayaan*; ava *kaawi*; pva *makwi*.

كوى *kawa*^{3} /vn/‖*bil-ɣala wik-kawa* at painfully exorbitant prices, as in *baʕa l-bayaaʕ bil-ɣala wik-kawa* tinning has become outrageously expensive.

كاوى *kaawi* /adj/ caustic. *ṣooda kawya* caustic soda.

كاوية *kawya* /n pl *-aat*/ soldering iron.

كوّاية *kawwaaya* /n pl *-aat*/ = *kawya*.

مكوى *makwa* /n pl *makaawi*/ **1** iron, flat iron. **2** press (for clothes etc.). **3** (pair of) curling tongs. — /no pl/ **4** ironing, clothes ready to be ironed, or just ironed.

مكوجى *makwagi* /n pl *-yya*/ one whose trade is ironing clothes.

اتكوى *ʔitkawa* or *ʔikkawa* /vi/ passive of *kawa*. - iva *mitkiwi*.

انكوى *ʔinkawa* = *ʔitkawa*. - iva *minkiwi*.

ك و ى ت

الكويت *ʔil-kuweet, ʔil-kiweet, ʔik-kiwiit* /prop n/ Kuwait.

كويتى *kuweeti* **1** /adj */ pertaining to Kuwait. **2** /n * and pl *kawayta*/ a Kuwaiti.

كوّت *kawwit* /vt/ to Kuwaiti-ize. - vn *takwiit*; ava/pva *mikawwit*.

اتكوّت *ʔitkawwit* or *ʔikkawwit* /vi/ to be or become Kuwaiti-ized. - ava/iva *mitkawwit*.

ك و ى س see ك ى س^{2}: *kuwayyis, kiwayyis*

ك ى ا ك

كياك *kiyaak* (also *kiyahk*) <Copt> /n/ fourth month of the Coptic year (early December to early January). *kiyaak ṣabaaḥ-ak misaa-k yixalli faṭuur-ak huwwa ʕafaa-k* jingle concerning the shortness of daytime during the month of *kiyaak*.

ك ى ب see ء ك ى ا ب: *ʔikyaab*

ك ى ب ر

كيبر *kiibar* <Engl>: *gool kiibar [soccer]* goalkeeper, goalie.

(ك ى ت)

كيت *keet: keet wi-keet* this and that. *ʔaalu ʕaleeha keet wi-keet* they said this and that about her.

كيت *kiit* <Fr *quitte*> /adv/ even, quits (in gambling).

ك ى ح

كاح *kaaḥ (i)* /vt/ **1** to tease. *baṭṭal tikiiḥ ʔuxt-ak iṣ-ṣuɣayyara* stop teasing your little sister! **2** to bother, irritate. *fii dimmil fi-kitf-i kayiḥ-ni* I've got a boil on my shoulder that's been bothering me. - vn *keeḥ, kayaḥaan*; ava *kaayiḥ*.

كيحة *keeḥa* /inst n, pl *-aat*/ a teasing.

كيّاح *kayyaaḥ* **1** /adj */ given to teasing. **2** /n */ a perpetual tease.

اتكاح *ʔitkaaḥ* or *ʔikkaaḥ* /vi/ **1** to be teased. **2** to be bothered, be irritated. - iva *mitkaaḥ*.

انكاح *ʔinkaaḥ* = *ʔitkaaḥ*. - iva *minkaaḥ*.

كايح *kaayiḥ* /vt/ to tease persistently, *ʔilḥaqi ya maama faṭḥi ʕammaal yikaayiḥ ʔiʃ-ʃaɣɣaala* mummy, mummy, Fathi keeps teasing the maid! - vn *mikayḥa*; ava *mikaayiḥ*.

اتكايح *ʔitkaayiḥ* or *ʔikkaayiḥ* /vi/ to be teased persistently. - iva *mitkaayiḥ*.

ك ى د see also ء ك د^{1}

كاد *kaad (i)* /vt/ **1** to spite, thwart. *yalla nfarfiʃ wi-nkiid-u* let's go and have a good time and spite him. **2** to vex, annoy. *kidt*^{a} *ḥamaat-i b-ẓuraaṭ-i [prov]* (I annoyed my mother-in-law with my farting) ≈ I cut my nose off to spite my face. - vn *keed*; ava *kaayid*.

كيدة *keeda* /inst n, pl *-aat*/ a spiteful act. *ḥ-aruuḥ bil-keeda fiiku* I'll go if only to spite you!

كيّاد *kayyaad* /adj */ spiteful.

مكيدة *makiida* /n pl *makaayid*/ **1** plot, intrigue, scheme. **2** trap.

مكياد *mikyaad* /n pl *makayiid*/ penis (in the jargon of homosexuals).

اتكاد *ʔitkaad* or *ʔikkaad* /vi/ **1** to be spited, be thwarted. **2** to be vexed, be annoyed. - iva *mitkaad*.

انكاد *ʔinkaad* = *ʔitkaad*. - iva *minkaad*.

كايد *kaayid* /vt/ to play malicious tricks on, spite. *waḥda ʕamalit da mkayda fiiha* some woman did that to spite her. - vn *mikayda*; ava *mikaayid*.

اتكايد *ʔitkaayid* or *ʔikkaayid* /vi/ passive of *kaayid*. - iva *mitkaayid*.

ك ى ز ر
كيزر *kayzar* /coll n/ bread rolls.

ك ى س [1]
كيس *kiis* /n pl *kiyaas, ʃikyaas, ʃakyaas*/ **1** sack, bag. *ʃakyaas mixaddaat* pillow cases. *kiis dahab* a purse of gold. *kiis naylun* polythene bag. *kiis filuus* (lady's) money purse, change purse. ‖*kiis duhni [path]* sebaceous sac. **2** bath mitt of coarse wool.
كيسة *kiisa* /n pl *-aat*/ little sack or bag.
كيّس *kayyis* /vt/ **1** to massage and scrub (s.o.). **2**↓ to save (money). *raagil baxiil bi-yiqbaḍ filuus wi-ykayyis-ha* he is a miser who gets money and stores it up. - vn *takyiis*; ava *mikayyis*.
مكيّس *mikayyis* /adj */ rich, wealthy.
مكيّساتى *mikayyisaati* /n pl *-yya*/ public bath attendant who massages and scrubs patrons.
اتكيّس *ʃitkayyis* or *ʃikkayyis* /vi/ **1** to be massaged and scrubbed. **2** to be saved (of money). - iva *mitkayyis*.

ك ى س [2]
كياسة *kiyaasa*↑ /n/ tact, diplomacy.
كواسة *kawaasa* /n/ niceness, excellence. *ʃin-nibiit da ʃaaxir kawaasa* this wine is top-notch.
كويّس *kuwayyis, kiwayyis* **1** /adj */ nice, good, fine. *raagil kuwayyis* a good man. *raagil kuwayyis fi-fuxl-u* a man who is good at his work. *ʤirʃeen kiwayyisiin* a good sum of money. *maʃy-a-ha miʃ kuwayyis* her comportment is not nice. *ʃizzayy-ak. - kuwayyis il-ḥamdu li-llaah* 'How are you?' 'Fine, thanks.' **2** /adv/ well. *ʃana ʤarf-u kwayyis* I know him well.

ك ى س [3]
كيس *kees* <Fr *caisse*> **1** /n pl *-aat*/ pay desk, cashier's desk. **2** /interj/ call by shop assistant for sold merchandise to be taken for wrapping and collection by customer.

ك ى ش
كيشة *kiiʃa* /adj invar/ spineless. *raagil kiiʃa* spineless man, jellyfish type.

ك ى ف
كيف *keef* /n/ **1** preference, liking, inclination. *ma-ʤandii-ʃ keef lis-siima l-lelaa-di* I'm in no mood for the cinema this evening. *ʤandu keef yiʃrab nibiit* he feels like drinking wine. *ʤala keef-ak* as you like. ‖*nisiib id-dinya timʃi ʤala kef-ha* ≈ we'll let the world go hang! - *ʃinta w-keef-ak* it's up to you. - *huwwa b-keef-ak illi b-yiigi hina* is it up to you who comes here? **2** addiction. – /pl *kuyuuf*/ **3** narcotic.
كيف *kiif* /interrog adv/ *[non-Cairene]* how? *ʃig-gaww[i] b-yiʤmil kiif* how's the weather doing? *ʃabuu-k ʤaamil kiif* how's your father?
كيفيّة *kayfiyya* /n/ manner, way. *nikkallim ʤan kayfiyyit ʤamal il-kunaafa* let's talk of how *kunaafa* is made.
كيّيف *kayyiif* /n pl *kayyiifa*/ **1** buff, enthusiast. *kayyiif qahwa* a coffee buff. **2** connoisseur, sophisticated devotee. *kayyiif mazziika* a devoted music lover.
كيّف *kayyif* /vt/ **1** to give pleasure to. *ʃaʤraf ʃakayyif iz-zibuun* I know how to make the customer happy. *ʤaawiz mara mitwaddika tkayyif-u w-tibsiṭ-u* he wants an experienced woman who can please him in every way. **2** to adjust, adapt. *laazim tiʤraf tikayyif nafs-ak fi-maʤiifit ig-geeʃ* you must learn to adapt yourself to army life. - vn *takyiif*; ava/pva *mikayyif*.
تكييف *takyiif* /n/ adaptation, adjustment. *takyiif hawa* air conditioning.
مكيّف *mukayyif* /n pl *-aat*/ **1** narcotic. **2** air conditioner.
مكيّفاتى *mikayyifaati* /n pl *-yya*/ hedonist, epicurean.
اتكيّف *ʃitkayyif* or *ʃikkayyif* /vi/ **1** to be given pleasure. **2** to be adapted, be adjusted. **3** to adapt oneself. *naas ma-tkayyifit-ʃ[i] maʤa l-mugtamaʤ* people who have not adapted themselves to society. - ava/iva *mitkayyif*.

ك ى ك [1]
كيك *keek* <Engl> /coll n/ small cake(s).
كيكة *keeka* /n pl *-aat*/ **1** type of plain cake, sometimes containing raisins or jam. **2** blank, block (of plastic or other raw material to be pressed or stamped by a machine). **3** *[mil]* mess tin.
كيكاية *kekaaya* /unit n, pl *-aat*/ a small cake.

ك ى ك [2] see ك ى ا ك : *kiyaak*

ك ى ل
كيل *keel* /n/ volume, measure. *kaan laban maxfuuf wi-kamaan il-keel naaqiṣ* the milk was adulterated and the amount was short too.
كيلة *keela* /n pl *-aat*/ **1** dry measure of 16.72 litres, being one-twelfth of an ardeb. **2** container for measuring such a quantity.
كيّال *kayyaal* /n */ measurer (particularly of grains). *ʃil-kayyaal bi-ykayyil il-ɣalla* the man with the measure measures out the wheat. ‖*kull[i] fuula w-laha kayyaal [prov]* (every bean has its weigher) every Jack has his Jill.
مكيال *mikyaal* /n pl *makayiil*/ measuring container (for liquids).

كيّل *kayyil* /vt/ to measure by volume. *kayyil talaata litr*^{i} *laban* he measured out three litres of milk. - vn *takyiil*; ava/pva *mikayyil*.
اتكيّل ʔ*itkayyil* or ʔ*ikkayyil* /vi/ to be measured by volume. - iva *mitkayyil*.

ك ى ل و
كيلو *kiilu* <Fr *kilo*> /n pl -*waat*/ **1** kilogram. *kiilu laḥma w-nuṣṣ*^{i} *kiilu ruzz* one kilogram of meat and half a kilogram of rice. **2** kilometre. ʔ*il-ɛarabiyya btaɛt-u qaṭaɛit ʔarbiɛiin kiilu mbaariḥ* his car covered forty kilometres yesterday. **3** kilowatt. *daffaaya btaaɛit kiilu w-nuṣṣ* a one-and-a-half kilowatt heater.

ك ى ن [1]
كوكايين *kukayiin* <Fr *cocaïne*> /n/ cocaine.

اتكيّن ʔ*itkayyin* or ʔ*ikkayyin* /vi/ to become high on cocaine. - ava *mitkayyin*.

ك ى ن [2] see ك و ن : *kayaan, kiyaan*

ك ى ن [3] see ك ا ن : *kaana*

ك ى ن [4] see ك ا ن ى : *kaani*

ك ى ن ا
كينا *kiina* <It *china*> /n/ **1** quinine. ‖*xaʃab kiina singaabi* cinchona, Peruvian bark. **2** tonic wine based on a cinchona extract.

ك ى ه ك see ك ى ا ك : *kiyahk*

ك ى ى see ك و ى

ل

ل

ل *li-* /w pron suff and independently: ***liyya, lik/liik, liki/liiki, lu(h)/lii(h), laha/liha/liiha, lina/liina, lukum/liikum, luhum/liihum***; enclitically: ***-li, -lak, -lik, -lu, -lha, -lna, -lkum, -lhum***/ preposition indicating **1** direction in space or time. *baṣṣuu-li* they looked at me. *mil-ʕarḍ[i] l-fooq* from the floor up. *li-ʕaaxir in-nahaar* to the end of the day. *min sana l-sana* from one year to the next. **2** dative relationship. *ʠaluu-li kida* they told me so. *ḥubb-ak ʕinta liyya* your love for me. *xàdt[a] ḥaaga lik-kuḥḥa* I took something for the cough. *ʕiʕmil-li maʕruuf* do me a favour. *rakkib laha n-nuur* he installed the electricity for her. **3** preferential or supportive relationship. *saybaa li-waaḥid taani* she has left him for another. *ʕiḥna liiha miyya fil-miyya* we're for it one hundred per cent! *yoom liik wi-yoom ʕaleek [prov]* one day is for you, another against you. ‖*la liyya wala ʕalayya* minding my own business, doing no harm. **4** appertainment. *ma-lhaa-ʃ beet* she doesn't have a house. *huwwa-na liyya ɣeer-ak* do I have anyone but you? *kull[i] lukanda liiha mudiir* every hotel has a manager. *gidd-u l-ʕabuu* his paternal grandfather. *lu ʕaʃart iyyaam fi-maṣr* he's been in Egypt ten days. *lu talatt iyyaam ma-gaa-ʃ* he hasn't come for three days. **5** entitlement. *ma-ḥadd[i]-ʃ lu ʕandi ḥaaga* I don't owe anything to anyone. *liik ʕalayya tneen gineeh* I owe you two pounds. **6** ethical dative. *rawwaḥt[i] w-laʠet-lak iʃ-ʃaʠʠa kull-a-ha duxxaan* I returned home and, lo and behold, the flat was full of smoke! *ruḥt[i] katib-lak ḥittit diin ʃakwa* so I wrote up, I certainly did, a real bitch of a complaint!

¶ *li-ʕinn* /conj/ because. *ḍarabt-u l-ʕinnu narviz-ni* I hit him because he annoyed me.

ل *la-* **1** /conj, esp after v *xaaf* or imper/ lest. *ʕuskut la-yiḍrab-ak* be quiet lest he hit you. *ʕana xaayif la-ykuun il-mablaɣ miʃ ʕagb-ak* I'm afraid that the amount may not please you. **2** emphatic particle introducing strong assertion or oath. *ḥilfit la-tifarraʠ ʕeef ʕal-masakiin* she swore that she would distribute bread to the poor. *law kunt[i] ʕaʃargi la-kunt astiʠiil miṣ-ṣubḥ* if I were a traffic cop I'd resign tomorrow for sure!

ل ا

لأ، لاء، لا *la* or *laa* or *laʕ* or *laʕʕa* /interj/ no! *ʕinta gayy.*
- *la ʕana maʃxuul* 'Are you coming?' 'No, I'm busy.' *ʕinta raayiḥ walla laʕ* are you going or not?

¶ *la* (or *laa*) ... *wala* /correl conj/ neither ... nor, as in *la ɣani wala faʠiir* neither rich nor poor. *ma-fii-ʃ la ʠahwa wala ʃaay* there's neither coffee nor tea. ‖*la liyya wala ʕalayya* minding my own business. - for frozen contexts commencing with *la* (e.g., *la budd*), look up the second component. *-laʕʕa lamma tluʕʕ-(ak) [abus]* retort to *laʕʕa* when said in a brusque or offensive way.

لا *la-* negative particle used in the formation of such compounds as *lasilki* /n/ wireless. *ʕil-lafuʕuur↑* /n/ the unconscious. *ʕil-lamubalaah↑* /n/ apathy.

تلولك *tiluʕʕ-ak: laʕʕa lamma tluʕʕ-ak [abus]* retort to *laʕʕa* (q.v.) when said in a brusque or offensive way.

ل ا ز و ـ

لازورد *laazaward* /n/ *[min]* lapis-lazuli.

(ل ا س)

لاسة *laasa[1]* /n pl *-aat*/ white wrapper of fine linen or silk worn around a cotton skullcap.

لاسة *laasa[2]↓* /n pl *-aat*/ gum (of the teeth). - also *lisa, lasa.*

ل ا ك ا

لاكا *laaka* <It *lacca*> /n/ lacquer, lac, shellac. *xaʃab laaka* lacquered wood.

ل ا ل see ل ل ى: *laala*

ل ا ك ن

لكن *laakin* (also *lakin, lakiin*) /conj; w foll pron suff *lakinn-*/ but. ‖*ma-lakin-ʃ* ≈ there are no ifs and buts about it.

ل ا م

لام *laam*[1] /fem n, pl *-aat*/ twenty-third letter of the Arabic alphabet. ‖*baqa laam ʔalif* ≈ he got staggering drunk (since the ligature لا in Arabic script resembles a pair of legs crossed at the ankles).

ل ء and ل ء ء see ل أ: *laʔ, laʔʔa, tiluʔʔ-ak*

ل ء ل see ل ل ى[1]

ل ء م[1]

لأم *laʔam (u)* (also *laʔan*) /vi/ to behave with deceit or cunning. *ʔil-wad da laʔam ɛaleena w-xallaa-na saddaqnaa* the kid pulled the wool over our eyes and made us believe him. *huwwa ɛammaal yilʔum ɛaʃaan yaaxud il-ʔarq*[i] *rxiiṣa* he's trying all the sly tricks he can think of to get the land cheap. - vn *luʔm*; ava *laaʔim*.

لؤم *luʔm* (also *luʔn*) /n/ cunning.

لؤميّة *luʔumiyya* (also *luʔuniyya*) = *luʔm*.

لئيم *laʔiim* (also *laʔiin*) /adj pl *liʔaam, luʔama* (also *liʔaan, luʔana*)/ cunning, sly. *raagil laʔiim bitaaɛ maqaalib* a cunning man given to intrigues. *ʔid-dunya laʔiima* it's a wicked world.

ألأم *ʔalʔam* (also *ʔalʔan*) /el/ more/ most cunning or sly.

ائتلأم *ʔitlaaʔim*[1] (also *ʔitlaaʔin*) /vi/ to behave deviously or cunningly. *ʔinta b-titlaaʔim ɛaleena leeh - fakir-na miʃ fahmiin-ak* why are you being so devious with us? do you think we don't know what you're up to? - ava *mitlaaʔim, mutalaaʔim*↑.

استلئم *ʔistalʔim* (also *ʔistalʔin*) 1 /vt/ to consider cunning. 2 /vi/ to behave cunningly. - vn *ʔistilʔaam*; ava *mistalʔim*.

ل ء م[2]

لائم *laaʔim*↑ /vt/ to suit, be compatible with. *ʔil-ʔigraʔaat illi tlaaʔim ẓuruf-na* the procedures consistent with our circumstances. - vn *mulaʔma*; ava *mulaaʔim*.

لايم *laayim* /vt/ 1 to content, suit, (s.o.). *ṭab - ḫa-nruuḥ ɛaʃaan nilayim-hum bass* O.K. we'll go just to make them happy. ‖*layim-ha* take it easy! - *layim-ha ʃwayya maɛaa* go easy on him! - *ʔid-dinya ma-laymit-haa-ʃ maɛaaya* things haven't gone my way. 2 to enable to get hold (of s.th.). *layim-ni ɛal-filuus* let me get my hands on the money! - vn *milayma*; ava *milaayim*.

ائتلأم *ʔitlaaʔim*[2]↑ /vi/ to be compatible, go well together. *ṭabiɛt-u ma-titlaʔim-ʃ*[i] *maɛa n-naas dool* he has no rapport with those people. - vn *talaaʔum*; ava *mutalaaʔim*.

ائتلايم *ʔitlaayim* /vi/ passive of *laayim*. - iva *mitlaayim*.

التأم *ʔiltaʔam*↑ /vi/ to heal (of a wound). - vn *ʔiltiʔaam*; ava *miltiʔim, multaʔim*.

ل ء م م see ء م م ا: *la-ʔimma, la-ʔimman*

ل ء ن see ل ء م: *laʔan, luʔn, luʔuniyya, laʔiin, ʔalʔan, ʔitlaaʔin, ʔistalʔin*

ل ب ا ن

لبان *libaan*[1] <Copt> /n/ tow rope (of a Nile sailing boat).

ل ب ب[1]

لبّ *lubb*↑ /n/ 1 pith, pulp (of fruit etc.). 2 essence, essential part. *ɛirif lubb il-ḥikaaya ɛala ṭuul* he grasped the essence of the matter immediately. 3 mind, reasoning power.

لبّ *libb* /coll n/ edible seeds (mainly) of plants of the cucurbit family.

لبّة *libba* /n/ 1 /unit n, pl *-aat*/ a single *libb* seed. ‖*baṭṭiixa nuṣṣ*[i] *libba* a medium-ripe water-melon. — /pl also *libab*/ 2 base of the neck. 3 gold necklace (of the choker type).

لبّاية *libbaaya* = *libba* 1.

لبب *labab* /n/ martingale.

لبابة *libaaba, lubaaba* /n/ soft inner part (e.g., of bread).

لبيب *labiib* /adj pl *ʔalibba*/ sensible. *kullu labiibin bil-ʔiʃaarati yafhamu [prov]* ≈ a nod for a wise man.

لبّب *labbib* /vt/ to make a gash in (a water-melon, to test its ripeness). ‖*labbib kirʃ-a-ha* he sliced open her belly (like a water-melon). - vn *talbiib*; ava/pva *milabbib*.

تلابيب *talabiib: ʔil-mask*[i] *min* (or *fi-*) *talabiib(-u)* taking hold of (s.o.) by the front of his clothes.

ائتلبّب *ʔitlabbib* /vi/ to be incised with a gash (of a water-melon, to test its ripeness). - iva *mitlabbib*.

ل ب ب[2]

لبّ *labb (i)* 1 /vt/ *[slang]* to hit, whack. *ʔil-buliiṣ labb-u ɛalqa ḫilwa* the police gave him a good going-over. 2 /vi/ to quiver, shake. *ʔil-miɛaddiyya bi-tlibb*[i] *taḫtiik*

the footbridge shakes under you. - vn *labb, lababaan*; ava *laabib*; pva *malbuub*.
اتلبّ *ʔitlabb* /vi/ *[slang]* to be hit, be whacked. - iva *mitlabb*.

ل ب ب ى ك see ل ب ى¹: *labbay-k*

ل ب ت ر
لبتر *libitr* <Fr *pupitre*> /n/ music rack (of a piano).

ل ب خ¹
لبخ *labax¹ (i)* /vt/ to perplex, confuse. - vn *labaxaan, labx, labxa*; ava *laabix*; pva *malbuux*.
لبخة *labxa* /n/ **1** /pl *-aat, libax*/ poultice. **2** /invar/ bungler, inept person.
ألبخ *ʔalbax* /el/ more/most inept.
اتلبخ *ʔitlabax* /vi/ to be or become perplexed or confused. *ʔitlabaxna labxit il-kilaab* we were at a complete loss. - ava/iva *mitlibix*.
لبّخ *labbax* /vi/ **1** to apply a poultice. *labbax ʕala l-xurraag li-ḥadd¹ ma yistiwi* apply a poultice to the boil until it comes to a head. **2** to make a mess. *maafi tlabbax fiṭ-ṭiin leeh* why are you stomping about in the mud? *ʔil-walad da labbax fil-imtiḥaan* that boy made a complete mess of the examination. - vn *talbiix*; ava *milabbax*.
¶ *labbax fik-kalaam* (1) to commit a solecism. (2) to speak rudely or offensively.
استلبخ *ʔistalbax* **1** /vt/ to con, dupe. **2** /vi/ to play the fool. - vn *ʔistilbaax*; ava/pva *mistalbax*.

ل ب خ²
لبخ *labax²* /coll/ lebbek tree(s) (Acacia lebbek).

ل ب د¹
لبد *labad* or *libid (a, i)* /vi/ **1** to lurk, lie in ambush. *labid-lu fid-dura* lurking in the maize, waiting to get him. ‖ *zayy it-tiʕbaan yuqruṣ wi-yilbad* like a snake he strikes and then lies low (said of one who is secretly malicious). **2** *[slang]* to hang about, outstay one's welcome. - vn *labadaan*; ava *laabid*.
لبدة *libda¹* /n pl *libad*/ blind, hide (for shooting).
اتلبّد *ʔitlabbid¹* /vi/ **1** to lurk, lie in ambush. **2** *[slang]* to hang about, outstay one's welcome. - ava *mitlabbid*.
استلبد *ʔistalbad↓*, *ʔistalbid* = *labad*. - ava *mistalbid*.
استلبّد *ʔistilabbad, ʔistilabbid* = *ʔistalbad*. - ava *mistilabbid*.

ل ب د²
لبدة *libda²* /n pl *libad*/ *[obsol]* cap of heavy felt (worn by Egyptian peasant men).
لبودى *libuudi* or *lubuudi* /n pl *-yya*/ maker of felt caps.
لبّاد *libbaad* /n/ felt.
لبّادة *libbaada* /n pl *-aat*/ **1** /unit n/ a piece of felt. **2** saddle pad.
لبّد *labbid* /vt/ **1** to felt (wool, hair, grass etc.). **2** *[metal]* to sinter. — /vi/ **3** to become matted. *ʃaʕr-a-ha xifin wi-mlabbid zayy iṣ-ṣuuf* her hair is coarse and matted like fleece. - vn *talbiid*; ava/pva *milabbid*.
اتلبّد *ʔitlabbid²* /vi/ **1** to be felted (of wool, hair, grass etc.). **2** *[metal]* to be sintered. - iva *mitlabbid*.

ل ب ر و
لبرو *libru* <It *libero*>: *[naut] muxṭaaf libru* anchor a-weigh!

ل ب س¹
لبس *libis (i)* /vt/ **1** to don, put on, get dressed in. *ʔilbis huduum-ak* put on your clothes. *libsit is-saaʕa* she put on the watch. ‖ *libis xazuuq* to fall for a dirty trick. **2** to wear, be dressed in. *ʔana b-albis badla ṭuul in-nahaar* I wear a suit all day. **3** to possess (of a demon). *ʔis-sawwaaq malbuus* the driver is possessed by the Devil. — /vi/ **4** to get dressed (in clothes suitable for going out). *ma-tinzil-ʃ if-ʃaariʕ bil-bijaama - laazim tilbis* don't go out in the street in your pyjamas - you must be properly dressed. **5** to fit. *ʔig-gawanti da b-yilbis fi-ʔiid-i* these gloves fit me. **6** to strike home (of a blow). *taalit marra ḍ-ḍarba libsit* at the third try the blow struck home. *ʕarabiyya libsit fiyya fil-garaaʃ* a car ploughed into me in the garage. *ʔil-koora libsit fig-goon* the ball slammed into the goal. ‖ *ʔil-fikra libsit fi-dmaaɣ-u* he became obsessed by the idea. **7** *[naut]* to run aground. - vn *libs, labasaan*; ava *laabis*; pva *malbuus*.
لبس *libs¹* **1** /vn/ ‖ *(ʔiʃ-ʃiwaal) kaan lu libs* (the sack style)) used to be worn, it had its time as a fashion. **2** /n/ clothing, dress, attire. *libs¹ koora* soccer outfit. *libs[a] ʕaskari* police uniform.
ملبوسات *malbusaat* /pl n/ clothes, clothing.
لبس *labs↑* /n/ misunderstanding. *ḥaṣal labs¹ fil-mawquuʕ* some confusion arose in the matter.
لبسة *labsa* /pl *-aat*/ instance noun of *libs*. *yadoobak labsiteen wi-yittaakil* hardly two wearings and it gets frayed. *gat-laha labsa* she became possessed.
لباس *libaas* /n pl *ʔilbisa, libisa*/ **1** underpants, drawers. **2** motif in tent appliqué work (see Pl.H, 14).
لبوس *lubuus* /n/ **1** /coll/ suppositories. **2** /pl *-aat*/ suppository.

لبّيس *labbiis* /pl *labbiisa*/ **1** /n/ *[obsol]* valet, body servant. **2** /adj/ well-dressed, elegant, having dress-sense.
لبّيسة *labbiisa* /n pl *lababiis*/ **1** (also *labbiisit gazma*) shoehorn. **2** cap, cover (e.g., for a pen).
ملابس *malaabis* /pl n/ clothes, clothing.
اتلبس *ʔitlabas* /vi/ **1** to be worn. ‖*ma-yitlibis-ʃ*^{i} *ɛalee hduum* clothes are not worn on it (said, e.g., of something painful), as in *ʔik-kalam-da ma-yitlibis-ʃ*^{i} *ɛalee huduum* such talk causes much pain. **2** to be possessed by a demon. - iva *mitlibis*.
لبّس *labbis* /vt/ **1** to dress. *labbist-u ʕaḥmar* I dressed him in red. ‖*labbis il-xunfisa tibqa sitt in-nisa* and *labbis il-buuṣa tibqa ɛaruusa [prov]* ≈ clothes make the person. **2** to cause to wear. *labbist-a-ha l-balṭu* I made her wear the coat. ‖*labbisuu l-ɛimma* they fooled him. - *labbist-u ṭ-ṭarabeeza* I crowned him with the table. - *labbisuu-ni xazuuq* they put a dirty trick over on me. **3** to fit. *ʔil-kababgi labbis il-laḥma fis-siix* the *kababgi* fitted the meat on the skewer. - vn *talbiis*; ava/pva *milabbis*.
تلبيسة *talbiisa* /n pl *talabiis*/ **1** instance noun of *talbiis*. **2** set of false teeth. **3** belly-dancer's outfit. **4** *[mech]* plain bearing. **5** backing of certain designs in tent appliqué work (see Pl.H, 28).
ملبّس *milabbis* **1** /adj/ fatty (meat). **2** /coll n/ sugar-coated almonds, (loosely also) any hard sweets or candies.
ملبّسة *milabbisa* /unit n, pl *-aat*/ a sugared almond, (loosely also) a hard sweet or candy.
ملبّسايّة *milabbisaaya* = *milabbisa*.
اتلبّس *ʔitlabbis* /vi/ **1** passive of *labbis*. **2** to take possession (of a demon). *ʔis-sawwaaq ʔif-fiṭaan mitlabbis bii* the Devil has possessed the driver. - ava/iva *mitlabbis*.
تلبّس *talabbus* /n/ *[leg]* flagrante delicto.
متلبّس *mutalabbis* /adj */ *[leg]* in flagrante delicto, red-handed.
التبس *ʔiltabas*↑ /vi/ to become confused or mixed (with s.th. else) in such a way as to give a false impression. *ʔiṣ-ṣuwar iltabasit bi-baɛḍ* the pictures were superimposed on each other. *ʔiltabas ɛalee ʔil-ʔamr* he misinterpreted the situation. - vn *ʔiltibaas*; ava *miltibis, multabis*.

ل ب س ²

لبس *libs*^{2} /n/ a carp-like Nile fish (Labeo niloticus and other varieties).
لبيس *libiis* <Copt> = *libs*^{2}.

ل ب س ا ن

لبسان *labsaan* <P *labsân*> /n/ black mustard.

ل ب ش

لبش *libʃ* <Copt> /coll n/ **1** bundle(s) (of certain plants, e.g., carrots, onions, sugar cane). **2** bushy growth put out by plants of the cucurbit family. **3** *[constr]* (concrete) slab foundation.
لبشة *libʃa* /pl *-aat*/ unit noun of *libʃ*. *ʔil-baṭṭiixa ma-tikbar-ʃ*^{i} *ʔilla f-libʃit-ha [prov]* ≈ a fruit cannot grow off the tree.
لبشاية *libʃaaya* = *libʃa*.
لبّش *labbiʃ* /vt/ **1** to incapacitate. *ʔir-rumatizm*^{i} *labbiʃ riglee-ha* rheumatism left her unable to walk. *ʔil-bard*^{i} *mlabbiʃ gism-i* the cold is paralysing me. *ṣabaḥt*^{i} *ɛenay-ya mlabbiʃa* I got up in the morning unable to open my eyes. **2** to bundle and tie (certain plants, e.g., carrots, onions, sugar cane). — /vi/ **3** to become bushy (of plants of the cucurbit family). - vn *talbiiʃ*; ava/pva *milabbiʃ*.
اتلبّش *ʔitlabbiʃ* /vi/ **1** to be incapacitated. *ʔitlabbiʃt*^{i} *mil-xoof* I was paralysed with fear. **2** to be bundled and tied. - iva *mitlabbiʃ*.

ل ب ص

لبص *labaṣ (u)* /vi/ **1** to jerk, dart, start. *ʔis-samak ɛammaal yilbuṣ fil-mayya* the fish are darting through the water. *ʔiftakaru l-walad maat lakinnu baɛd*^{i} *ʃwayya labaṣ wi-ḥarrak gism-u* they thought the boy had died but after a while he quivered and moved his body. **2** to play a trick. - vn *labṣ, labaṣaan*; ava *laabiṣ*.
لبص *libiṣ* /adj */ evasive, deceptive, deceitful.

ل ب ط

لبط *labaṭ*^{i} *(u)* /vt/ to knock to the ground. - vn *labṭ*; ava *laabiṭ*; ava *malbuuṭ*.
لبطة *labṭa* /inst n, pl *-aat*/ a knock that fells to the ground. ‖*malbuuṭ labṭa sooda* in an awful dilemma, going through a terrible crisis.
لبط *libiṭ* /adj * and pl *labaṭ*/ contentious, trouble-seeking, bullying.
لبط *labaṭ*^{2} /n/ *[path]* vitiligo.
ألبط *ʔalbaṭ* /adj, fem *labṭa*, pl *lubṭ*/ **1** piebald (of animals). **2** afflicted with vitiligo (of humans).
لباطة *labaaṭa* /n/ contentiousness, trouble-seeking, bullying.
اتلبط *ʔitlabaṭ* /vi/ to be knocked to the ground. - iva *mitlibiṭ*.
لبّط *labbaṭ* /vt/ **1** to splash, spatter, blot. **2** to smear, soil. - vn *talbiiṭ*; ava/pva *milabbaṭ*.
اتلبّط *ʔitlabbaṭ* /vi/ **1** to be splashed, be spattered, be blotted. **2** to be smeared, be soiled. - iva *mitlabbaṭ*.

لابط *laabiṭ* /vt/ to wrestle with. - vn *milabṭa*; ava *milaabiṭ*.
اتلابط *ʔitlaabiṭ* /vi/ to wrestle (with one another). - ava *mitlaabiṭ*.

ل ب ع
لبع *labaɛ (a)* /vt/ **1** to startle, scare. *ʔiskut labaɛt il-walad wi-xalleet-u ysarrax* stop that! you've given the child a fright and made him cry. **2** to hustle, rush. *maa-lak malbuuɛ kida* what are you rushing like that for? - vn *labɛa*, *labaɛaan*; ava *laabiɛ*; pva *malbuuɛ*.
اتلبع *ʔitlabaɛ* /vi/ **1** to be startled, be frightened, be scared. **2** be hustled, be rushed. - iva *mitlibiɛ*.

ل ب ق
لبق *labiqˀ* /adj */ well-spoken, polished in manners and speech.
لباقة *labaaqaˀ* /n/ polish of manners and speech.

ل ب ك
لبك *labak (u, i)* /vt/ **1** confuse, muddle. *ʔil-walad kaan bi-yitkallim kiwayyis wi-nta lli labakt-u w-xalleet-u yiɤlaṭ* the boy was speaking perfectly well but you got him in a muddle and made him slip up. **2** to cause to be lumpy. *ruzzˀ malbuuk* lumpy rice. - vn *labk, labakaan, labka*; ava *laabik*; pva *malbuuk*.
اتلبك *ʔitlabak* /vi/ **1** to be confused, be muddled. **2** to become or be made lumpy. - ava/iva *mitlibik*.
لبّك *labbik* **1** /vt/ to cause to be lumpy, gummy or sticky. *labbikit ir-ruzz* she made the rice lumpy. ‖ *labbik il-mawḍuuɛ* he made things complicated. **2** /vi/ to become lumpy, gummy or sticky. *ʔil-ɛagiin milabbik* the dough is lumpy. *makaroona mlabbika* gummy pasta. - vn *talbiik*; ava/pva *milabbik*.
اتلبّك *ʔitlabbik* /vi/ to be made or become lumpy, gummy or sticky. - vn *talabbuk*; ava/iva *mitlabbik*.
تلبّك *talabbuk* /vn/ ‖ *talabbuk fil-miɛda* indigestion.

ل ب ل ب
لبلب *lablib* **1** /vi/ to grow fresh and supple (of plants). *ʔil-quṭnˀ lablib lamma firib* the cotton plants were invigorated when they were watered. **2** /vt/ *[slang]* to cane, beat (with a pliant stick). - vn *lablaba*; ava/pva *milablib*.
لبلب *liblib* /adj * and invar/ *[slang]* quick-witted and talkative. *naadi l-waad il-liblib illi hnaak da* call that boy over there who's so full of quick answers. *liblib fi-* fluent in, as in *ʔil-bintˀ di liblib fil-faransaawi* this girl is fluent in French. *zayy il-liblib* fluently, as in *bi-titkallim ʔingiliizi zayy il-liblib barḍu* she speaks English fluently too.
لبلاب *liblaab* /n/ *[bot]* hyacinth bean (Dolichos lablab).
لبلوب *labluuḃ* /n pl *labaliib*/ **1a** tendril. **1b** switch, whippy stick. **1c** *[constr]* lath. **2** *labluub il-wirk* inner thigh **3** = *liblib*.
اتلبلب *ʔitlablib* /vi/ **1** to bend. *ʔil-xarazaana ṭariyya wi-b-titlablib* the cane is supple and bends easily. **2** *[slang]* to be caned. - ava/iva *mitlablib*.

ل ب ن [1]
لبن *laban* /n/ **1** milk. *laban ḥaliib* fresh milk. *laban ḍarb* buttermilk. *laban raayib* curdled milk. *sinaan il-laban* milk teeth. ‖ *nahaar-ak laban* may your day be fine! - *ṣaafi ya laban* formula of reconciliation after a quarrel. - *ʔummˀ laban [bot]* spurge. **2** *[coarse]* **2a** semen, come. ‖ *filmˀ laban* a sexy film. - *leela laban* an orgiastic evening. - *ʔabu laban* insulting form of address or reference to the driver of a horse-drawn carriage. **2b** vaginal secretions produced during sexual excitement, love juice.
ألبان *ʔalbaan* /pl n/ **1** types of milk. ‖ *muntagaat ʔalbaan* dairy products. **2** dairy, shop selling dairy products.
لبنى *labani* /adj/ **1a** pale blue. **1b** milky (of colour). **2** sucking (of a young animal).
لبّان *labbaan* /n * and pl *labbaana*/ milkman, milk-seller.
لبّانة *labbaana* /n pl *-aat*/ **1** milk jug. **2** milkmaid.
لبّانى *labbaani* /invar/ **1** /adj/ sucking (of a young animal). *ɛiglˀ labbaani* a nursing calf. **2** /n/ *[butcher]* young veal.
لبّين *libbeen* /n/ wild lettuce, acrid lettuce (Lactuca virosa).

ل ب ن [2]
لبان *libaan*[2] /n/ chewing gum. *ɛala wiff-ak libaan ya maddaaɤ il-libaan [prov]* ≈ whatever you do, it will show. ‖ *libaan dakar* resin of frankincense, olibanum. - *libaan nitaaya* a natural chewing gum.
لبانة *libaana* /unit n, pl *-aat*/ a piece of chewing gum, a piece of frankincense. ‖ *libanit-ha zarqa [prov]* she's a malicious gossip.
ملبن *malban* /n/ Turkish delight. ‖ *fattaḥ ɛeen-ak taakul malban [prov]* ≈ keep alert and you'll gain the best prize. - *bintˀ malban* a voluptuous girl.
لبّن *labbin* /vi/ to mumble, or talk in in a garbled fashion. - vn *talbiin*; ava *milabbin*.
¶ *labbin ɛala* to put the evil eye on (s.o., by talking about him).

³ ل ب ن see ل ب ا ن: *libaan¹*

ل ب ن ا ن
لبنان *libnaan, lubnaan* /prop n/ Lebanon.
لبناني *libnaani, lubnaani* **1** /adj */ Lebanese. **2** /n */ a Lebanese.

ل ب ن د
لبنده *labanda* <It *alla banda*>: *[naut] saqaala labanda* hard-a-port. *sangaq labanda* hard-a-starboard.

ل ب و
لبوة *labwa* /n pl *libaw/* **1** lioness. **2** highly-sexed woman. see further under ل ب و ن

ل ب و ن see also ل ب و
لبونة *labwana* /n/ *[coarse]* **1** unseemly conduct. **2** demeanour or behaviour of a highly-sexed woman.
ملبونة *milabwina* /fem adj/ *[coarse]* highly-sexed.
اتلبون *ʔitlabwin* /vi/ **1** *[coarse]* to behave coarsely (of women). **2** *[abus]* to be troublesome or nagging (of men). - ava *mitlabwin*.

¹ ل ب ى
لبّى *labba* **1** /vt/ to comply with (a request). **2** /vi/ *[Isl]* to utter the formula beginning *labbay-ka ʔallaahumma labbay-k* ('I answer your call, O God', recited by Muslims on pilgrimage to Mecca, and by all Muslims after the prayers recited during *ʔil-ʕiid il-kibiir* and the three days following). - vn *talbiyya, talbiyaʔ*; ava *milabbi*.
التلبية *ʔit-talbiyya* /n/ *[Isl]* the formula beginning *labbay-ka ʔallaahumma labbay-k*.
لبّى *labbay: labbay-ka ʔallaahumma labbay-k* see *labba* 2.
اتلبّى *ʔitlabba* /vi/ to be complied with (of a request). - iva *mitlabbi*.

² ل ب ى
لوبية، لوبيا *lubya* <P *lûbiyâ*> **1** /coll n/ cow-pea(s), black-eyed pea(s) or bean(s) (Vigna sinensis, Vigna catjang, Dolichos lubia, Dolichos sesquipedalis). ‖ *lubya sudaani* cajan pea(s), pigeon pea(s) (Cajanus indicus). **2** /adj invar/ fresh and young (of vegetables). *xiyaar lubya* young and crunchy cucumbers. *lubya ya figl! lubya [vendor's cry]* tender radishes! ‖ *bint! lubya* a dishy girl. - *nahaar lubya* a lucky day.

ل ب ى ا
ليبيا *libya* /prop n/ Libya.
ليبي *liibi* **1** adj */ Libyan. **2** /n */ a Libyan.

ل ت ت
لتّ *latt (i)* **1** /vt/ to knead. *tirubb il-ʕagiin wi-tlitt-u* you beat the dough and knead it. ‖ *ħikaaya maltuuta* an old story (i.e. something heard before). **2** *[slang]* to give a thrashing to. *ʔabuu-k ħa-ylitt-ak* your father will give you a good hiding. – /vi/ **3** to chatter, prattle. *ʕaʕadit tilitt! (fil-kalaam) maʕa l-mumarriḍaat* she sat chattering with the nurses. ‖ *latt! w-ʕagn* endless chatter. - vn *latt, latataan*; ava *laatit*; pva *maltuut*.
لتّة *latta* /n pl *-aat*/ piece of kneaded dough. ‖ *ʔiṭ-ṭiina min iṭ-ṭiina wil-latta mil-ʕagiina [prov]* ≈ like father, like son.
لتّات *lattaat* /n * and pl *lattaata*/ chatterbox.
اتلتّ *ʔitlatt* /vi/ **1** to be kneaded. **2** *[slang]* to be thrashed. - iva *mitlatt*.

ل ت ر
لتر *litr* (also *ritl↓*) <Fr *litre*> /n pl *-aat*/ litre.

ل ت ر ى
لوتريّة *lutiriyya, lutariyya* <It *lotteria*> /n pl *-aat*/ lottery.

ل ت ز ا ن
لاتزان، لتزان *latazaan* (also *xaʃab latazaan*) /n/ whitewood planking. - also *laṭazaan*.
لاتزانة، لتزانة *latazaana* = *latazaan*. - also *tazaana, laṭazaana*.

ل ت م
لتام، لثام *litaam* /n pl *-aat, litíma*/ veil or cover (for the lower part of the face). *ħaraami laabis litaam* a thief wearing a scarf (or the like) over his face.
لتّم، لثّم *lattim* /vt/ **1** to veil or cover the lower face of. **2** to bind the jaw of (a corpse, to prevent it falling). - vn *taltiim*; ava/pva *milattim*.
اتلتّم، اتلثّم *ʔitlattim* /vi/ **1** to be veiled or covered (of the lower part of the face). **2** to be bound (of the jaw of a corpse). - iva *mitlattim*.

ل ت ى ن
لاتيني *latiini* /adj */ Latin. *ʔil-ħuruuf il-latiniyya* Latin characters. *ʔil-kanaayis il-latiniyya [Chr]* the churches following the Latin rite. ‖ *ʔinta ħa-tkallim-ni latiini* don't speak to me in double-Dutch!

ل ث see ل س and ل اس

ل ث م see ل ت م

ل ج ء

لجأ *laga‘ (a)* /vi/ to resort, have recourse. *di ‘aaxir ħaaga b-yilga‘ laha* this is the last thing to which he resorts. - vn *luguu‘*; ava *laagi‘*; pva *malguu‘*.

لاجئ *laagi‘* /n */ refugee.

ملجأ *malga‘* /n pl *malaagi‘*/ (place of) sanctuary, refuge, home, asylum. *malga‘ ‘aytaam* orphanage. *malga‘ ʕagaayiz* home for the aged.

ألجأ *‘alga‘* /vt/ to cause to resort, cause to seek support. *‘eeh illi ‘alga‘-ak lik-kidb* what made you resort to lying? - ava *milgi‘*.

التجأ *‘iltaga‘* /vi/ to seek refuge, seek support, resort. *‘iltaga‘t^i l-rabb-i-na* I asked God for help. *huwwa dayman miltigi‘ liihum* he's always trying to get support from them. - vn *‘iltigaa‘*; ava *miltigi‘*.

ل ج ج

لجّ *lagg (i)* /vi/ to insist, nag. - vn *lagagaan, lagg*; ava *laagig*.

لجاجة *lagaaga* /n/ nagging.

ل ج ل ت –

لجلاتور *laglatoor* <poss Fr *régulateur*> /n pl *-aat*/ tuning key (of piano).

ل ج ل ج

لجلج *laglig* /vt and vi/ to cause to stutter. *‘il-xaḍḍa lagligit-ni* the shock left me stuttering. - vn *laglaga*; ava/pva *milaglig*.

اتلجلج *‘itlaglig* /vi/ **1** to be caused to stutter. **2** to stutter. - ava/iva *mitlaglig*.

ل ج م

لجام *ligaam* /n pl *‘ilgima, ligíma*/ bridle.

لجّم *laggim* /vt/ to bridle. *ʃiil is-sarg^i bass^i xalli l-ħuṣaan milaggim* remove the saddle, but leave the horse bridled. *yilaggim-u rabb-i-na yoom il-ʕiyaama b-ligaam min naar* may Our Lord bridle him with a bridle of fire on the day of resurrection! - vn *talgiim*; ava/pva *milaggim*.

تلجيمة *talgiima* /n pl *-aat*/ headstall and reins of a bridle.

اتلجّم *‘itlaggim* /vi/ **1** to be bridled. **2** to be dumbstruck, become speechless. *saaʕit ma faaf il-ʕaaḍi tlaggim* when he saw the judge he couldn't utter a word. - ava/iva *mitlaggim*.

ل ج ن

لجنة *lagna, lugna↓* /n pl *ligaan, lugaan↓*/ **1** committee. **2** examination room in a school.

لجّن *laggin* /vt/ to appoint committees for. *‘il-ħukuuma lagginit il-mafruuʕ* the government assigned the project to a committee (or several committees). - vn *talgiin*; ava/pva *milaggin*.

اتلجّن *‘itlaggin* /vi/ to be assigned to committee(s). - iva *mitlaggin*.

ل ح ح

لحّ *laḥḥ↑ (i)* /vi/ to insist. *laḥḥeet ʕalee yiigi maʕaana* I insisted he come with us. - vn *laḥḥ, laḥaḥaan*; ava *laaḥiḥ*.

لحوح *laḥuuḥ↑* /adj */ insistent.

لحّاح *laḥḥaaḥ↑* /adj */ insistent.

ألحّ *‘alaḥḥ↑* = *laḥḥ*. - vn *‘iliḥḥaaḥ*; ava *muliḥḥ*.

ملحّ *muliḥḥ↑* /adj/ pressing, urgent. *ħikaaya muliḥḥa* an urgent matter.

ل ح د [1]

لحد *laḥd* /n pl *luḥuud, luḥúda*/ underground chamber in which the corpse of someone important (or of anyone not wanting his bones removed from the site) is interred.

لحّاد *laḥḥaad* /n */ gravedigger.

لحّد *laḥḥad* /vt/ to entomb. - vn *talḥiid*; ava *milaḥḥad*.

اتلحّد *‘itlaḥḥad* /vi/ to be entombed. - iva *mitlaḥḥad*.

ل ح د [2]

إلحاد *‘ilḥaad↑* /n/ atheism.

ملحد *mulḥid↑* /n */ atheist.

ل ح س

لحس *laḥas[1] (a)* /vt/ **1** to lick. *bi-tilḥas ṣawabiʕ-ha baʕd il-‘akl* she licks her fingers after eating. *ruuḥ li-‘umm-ak tilḥas-ak* (go to your mother and she'll lick you) ≈ run home to your mother (a patronizing and usually offensive remark). ‖*laḥas kalaam-u* he went back on his word, he broke his promise. - *bi-yilḥas il-lahluuba* he's an audacious thief. - *‘alḥas misann-i w-‘abaat mihanni [prov]* (I'll lick my grindstone and sleep happy) ≈ better go without than get into debt. **2** to render temporarily blind (of a bright light, excessive reading etc.). **3** to deal (s.o.) a slap (especially, on the back of the neck). - vn *laḥs*; ava *laaḥis*; pva *malḥuus*.

لحس *laḥas[2] (i)* /vt/ to drive crazy (often with pleasure). *‘il-bint^i laḥasit-ni* the girl really made me flip. *ʕarabiyya tilḥis* a mind-blowing car. - vn *laḥas*; ava *laaḥis*; pva *malḥuus*.

ملحوس *malḥuus* /adj pl *malaḥiis*/ soft in the head, cuckoo.

ألحس ʔalḥas /el/ more/most touched, nutty or crazy.
لحّاس laḥḥaas /n */ **1** one who licks. **2** one who slaps. *ʔid-dafa ɛafa wil-bard[i] laḥḥaas il-qafa [prov]* warmth is health, cold is like a blow on the back of the neck.
اتلحس ʔitlaḥas[1] /vi/ passive of *laḥas[1]*. - iva *mitliḥis*.
اتلحس ʔitlaḥas[2] /vi/ to be driven crazy or go crazy (often with pleasure, wonder etc.). *ʔitlaḥast[a] ɛal-badla* I blew my mind over the suit. - ava/iva *mitliḥis*.
لحّس laḥḥas /vt/ to give to lick, give to suck. *ʔil-ʔumm[i] laḥḥasit ibn-a-ha ʂ-ʂuxayyar il-maṣṣaaṣa* the mother gave her little son a lolly to suck. *ʔil-walad da kibir ɛala t-talḥiis* that child is too big to be bottle-fed (or breast-fed). - vn *talḥiis*; ava/pva *milaḥḥas*.
اتلحّس ʔitlaḥḥas /vi/ **1** to be given to lick or suck. *ʔiṭ-ṭifl itlaḥḥas kitiir* the child was breast-fed (or bottle-fed) frequently (or for a long time). **2** to yearn (for, e.g., food). *qaaɛid yitlaḥḥas ɛal-ʔakl* he's sitting licking his lips in anticipation of the food. - ava/iva *mitlaḥḥas*.

ل ح س ن see ح س ن
لحسن laḥsan = ʔaḥsan[1] 2.

ل ح ظ
لحظ laḥaẓ↑ *(a)* /vt/ to notice. - vn *laḥaẓaan*; ava *laaḥiẓ*; pva *malḥuuẓ*.
لحظ laḥẓ /n pl ʔalḥaaẓ/ *[poet]* glance, look. *ʔalḥaẓ-ha tigraḥ* (the arrows of) her glances wound.
لحظة laḥẓa /n pl *-aat*/ moment. *fi-ʔaaxir laḥẓa* at the last moment. ‖*fi-laḥẓa waḥda* at one and the same moment. - *ʔaxbaar ʔaaxir laḥẓa* hot news.
ملحوظة malḥuuẓa /n pl *-aat, malaḥiiẓ*/ note, comment, observation, remark.
لاحظ laaḥiẓ /vt/ **1** to notice, take note of. *laḥiẓt innuhum naas ṭayyibiin* I realized that they were kind people. - /the literary passive imperfect also occurs/ *yulaaḥaẓ ɛaleehum ʔinnuhum buxala* they are noted for being miserly. **2** to pay attention to. *laaḥiẓ iṭ-ṭabiix ɛan-naar* keep an eye on the food on the gas! - vn *mulaḥẓa*; ava *milaaḥiẓ*; pva *mulaaḥaẓ↑*.
ملاحظة mulaḥẓa /n pl *-aat*/ observation, comment, remark.
ملاحظ mulaaḥiẓ /n */ overseer, superintendent, officer in charge.
اتلاحظ ʔitlaaḥiẓ /vi/ **1** to be noticed, be noted. **2** to be given attention. - iva *mitlaaḥiẓ*.

ل ح ف
لحاف liḥaaf /n pl ʔilḥifa, liḥífa/ quilt. *ɛala qadd[i] lḥaaf-ak maddid riglee-k [prov]* (according to the size of your quilt, stretch out your legs) ≈ cut your coat according to your cloth.
لحّف laḥḥaf /vt/ *[agric]* to level off by hand (inundated land unreachable by the *lawwaaṭa*). - vn *talḥiif*; ava/pva *milaḥḥaf*.
اتلحّف ʔitlaḥḥaf /vi/ passive of *laḥḥaf*. - iva *mitlaḥḥaf*.

ل ح ق[1]
لحق liḥiq or laḥaq *(a)* /vt/ **1** to reach, catch up with (with implication of speed). *ʔilḥaq-na ɛas-suuq* catch us up at the market. *ma-lḥiqnaa-ʃ il-qaṭr* we didn't make the train. *ʔil-waksa ʔilli laḥaqit-u* the misfortune which overtook him. *ʔig-gadaɛ huwwa lli yilḥaq maṭraḥ fil-ʔutubiis* the champ is the one who manages to get a seat on the bus. **2** to come to the rescue of, hurry to the aid of. *ʔilḥaquu-ni bid-duktuur* bring me the doctor quickly! *ʔil-mumassiliin bi-ybuṣṣu lil-mulaqqin ɛafaan yilḥaq-hum* the actors look to the prompter to help them out. **3** /preverb/ **3a** to have time to. *ma-lḥiqt[i]-ʃ ʔaḥaddan yimiin* I didn't have time to pull over to the right. **3b** to hurry (to do s.th.) before it's too late. *yalla ɛafaan tilḥaq tiruuḥ is-suuq wi-tgiib il-quuṭa l-ḥilwa di* hurry off to the market and get those nice tomatoes (before they're all gone). *ʔilḥaq tuub* hurry and mend your ways (before it's too late for you). ‖*malḥuuqa (barḍak)* it's not too late (for you to do something about the matter). **3c** to begin or manage (to do s.th.) earlier than expected. *ya mṣibt-i liḥqu yṣaddu* damn! they're already rusting! *huwwa liḥiq yiftaaq li-bn-u* has he started to miss his son so soon? - vn *laḥaqaan*; ava *laaḥiq*; pva *malḥuuq*.
اتلحق ʔitlaḥaq /vi/ passive of *laḥaq*. - iva *mitliḥiq*.

لحّق laḥḥaq /vt/ to cause (s.o.) to catch up with or be in time for. *laḥḥaqt-u ṭ-ṭayyaara* I helped him make the plane. - vn *talḥiiq*; ava/pva *milaḥḥaq*.
ملحّق milaḥḥaq /adj */ capable of keeping up with things. *mif milaḥḥaq ɛala ɛyaal-u* he can't make ends meet family-wise.
لاحق laaḥiq /vt and vi/ to keep up (with). *mif milaaḥiq ɛaʃ-ʃuɣl* he can't keep up with the work. *w-ana b-amallii-k laḥiq-ni fil-kitaaba* keep up with me in writing when I dictate to you. *ʔana mif milaḥiq-hum fil-ʔakl* I can't eat as fast as they do. ‖*ma-tlaḥiq-nii-ʃ fil-kalaam* don't keep anticipating what I'm going to say! - vn *milaḥqa*; ava *milaatiq*.
¶ *laaḥiq ɛala* to keep (s.o.) supplied. *mif milaaḥiq ɛaleehum filuus* I can't keep up with their demands for money.
ألحق ʔalḥaq /vt/ to cause to join, enrol, register. *leeh*

ma-tilḥiq-ʃ ibn-ak bi-maɛhad ṣinaaɛi why don't you enrol your son in a technical institute? - vn *ʃilḥaaq*; ava *milḥiq*; pva *mulḥaq*.

ملحق *mulḥaq* /n pl *malaaḥiq*/ **1** supplementary examination. *ʃil-waad saqaṭ fil-ɛarabi w-ɛandu mulḥaq* the boy failed in Arabic and has to do a supplementary examination. **2** annex (of a building). *kull istudyu lii mulḥaq* each studio has an annex. **3** appendix (to a book). **4** employer's copy of a payroll paid by a bank on his behalf. — /pl *-iin*/ **5** attaché. *xaff^{i} wizaarit il-xaarigiyya ka-mulḥaq* he entered the Ministry of Foreign Affairs as an attaché. — /adj */ **6** attached, annexed. *kull^{i} maktab ɛiqaari mulḥaq bii maktab handasi* each real-estate office has an engineering office attached to it.

التحق *ʃiltaḥaq*$^{\uparrow}$ /vi/ **1** to enrol, register oneself. *ʃiltaḥaqt^{i} bil-maɛhad* I enrolled in the institute. **2** to take up work (in an occupation or institution). *ḥa-yiltiḥiq bi-waẓiifa gdiida* he will take up a new post. - vn *ʃiltiḥaaq*; ava *miltiḥiq*.

² ل ح ق

see ل ح و ق: *luḥuuqi*

ل ح ل ح

لحلح *laḥlaḥ* /vt/ to stir to activity, set moving. *da kaslaan xaaliṣ - m-aɛraf-ʃ alaḥlaḥ-u ʃizzaay* he's very lazy - I don't know how to get him moving. *huwwa l-baqfiif illi ylaḥlaḥ-u* it's the tip that makes him move. *miʃ qaadir ʃalaḥlaḥ il-ɛarabiyya min maṭraḥ-ha* I can't budge the car from its place. - vn *laḥlaḥa*; ava/pva *milaḥlaḥ*.

لحلحة *laḥlaḥa* /n/ resourcefulness. *ʃir-rizq^{i} yḥibb il-laḥlaḥa [prov]* ≈ fortune shines upon those who bestir themselves.

ملحلح *milaḥlaḥ* /adj */ lively and resourceful. *ʃilli b-yingaḥ huwwa ʃ-ʃabb il-milaḥlaḥ* the one who succeeds is the enterprising young man.

لحلاح *liḥlaaḥ* /coll n/ *[bot]* **1** thistle(s). **2** meadow saffron.

لحلوح *laḥluuḥ* /n pl *laḥaliiḥ*/ *[slang]* an Egyptian pound (especially in contexts of bribing).

لحلوحة *laḥluuḥa: ʃik-kalba l-laḥluuḥa [coarse]* a pair of mating dogs.

اتلحلح *ʃitlaḥlaḥ* /vi/ **1** to be stirred into activity. **2** to get going, get moving. *ʃitlaḥlaḥ laḥsan maɛaad il-xada ḥa-yfuut* get a move on or you'll miss the lunch appointment. - ava/iva *mitlaḥlaḥ*.

¹ ل ح م

لحم *laḥam (i)* /vt/ **1** to join (by welding, soldering, splicing etc.). **2** to patch, mend. *ʃil-ɛagala ɛawza lḥaam* the tyre needs patching. — /vi/ **3** to heal (of a wound). *li-ḥadd^{i} ma l-garḥ^{i} yilḥim* until the wound heals. - vn *liḥaam, laḥm, laḥamaan*; ava *laaḥim*; pva *malḥuum*.

لحام *liḥaam* **1** /vn/ ‖*firiiṭ liḥaam* soldering flux. *liḥaam bunṭa* spot welding. **2** /n pl *-aat*/ join, joint. *ʃil-liḥamaat illi b-tibqa been il-balaaṭa wit-tanya* the joins between one tile and another. **3** *[text]* weft.

لحمة *laḥma^{i}* /inst n, pl *-aat*/ a weld.

لحمة *liḥma* /n pl *-aat*/ *[text]* weft. *ɛamalna fin-nasiig sida quṭn^{i} w-liḥmit ḥariir* we made a warp of cotton and a weft of silk in the fabric.

لحّام *laḥḥaam* /n */ one who solders, welder.

ملحمة *malḥama* /n pl *malaaḥim*/ epic. *malḥamit il-ʃilyaaza* the Iliad.

اتلحم *ʃitlaḥam* /vi/ **1** to be joined (by welding, soldering etc.). **2** to be patched, be mended. - iva *mitliḥim*.

لحّم *laḥḥam^{i}* = *laḥam* 1 and 2. - vn *talḥiim*; ava/pva *milaḥḥam*.

اتلحّم *ʃitlaḥḥam^{i}* = *ʃitlaḥam*. - iva *mitlaḥḥam*.

اتلاحم *ʃitlaaḥim*$^{\uparrow}$ /vi/ to close with one another. *ʃitlaḥmu bis-silaaḥ il-ʃabyaq* they fell upon each other with knives and bayonets. - ava *mitlaaḥim*.

التحم *ʃiltaḥam*$^{\uparrow}$ /vi/ **1** to heal over (of a wound). **2** = *ʃitlaaḥim*. - vn *ʃiltiḥaam*; ava *miltiḥim, multaḥim*.

ملتحمة *multaḥama* /n/ *[anat]* conjunctiva. *ʃiltihaab il-multaḥama* conjunctivitis.

² ل ح م

لحم *laḥm* /n/ **1** flesh. *dool min laḥm-i-na w-damm-i-na* they're our own flesh and blood. *huwwa ga b-laḥm-u w-damm-u* he came in person. *laḥm^{i} ktaaf-ak min xeer-i* (the flesh of your shoulders is from my goodness) you owe everything to me. ‖*ɛala l-laḥm* with nothing on underneath, as in *laabis baʃkiir ɛala l-laḥm* wearing a towel with nothing on underneath. - *ɛala laḥm^{i} baṭn-u* on an empty stomach. - *kal laḥm^{i} ʃabuu* he spoke ill of his father. - *raagil ɣalbaan fi-raqabt-u koom laḥm* a poor man with a lot of (helpless) children. - *dafaɛ min il-laḥm il-ḥayy* he paid what he could ill afford. **2** /pl *luḥuum*/ meat. *laḥm^{i} xanziir* pork. *ɛuguul il-laḥm* calves for meat. ‖*ʃaxd^{i} laḥm^{u} ɛala ɛaḍm* taking the good with the bad. - *kal-ha laḥm^{i} w-ramaa-ha ɛaḍm* he used her when she had something to offer and threw her out when she was finished.

لحمة *laḥma²* /n/ meat. *laḥma b-xuḍaar* meat and vegetable stew. ‖*ɛiid il-laḥma [slang Isl]* the Greater Feast (cf *ɛiid il-ʃaḍḥa*). - *ma-faf-f^{i} laḥma [slang]* he's a virgin, he's never had a woman.

لحماية *laḥmaaya* /n pl *-aat*/ fleshy growth in or on the body.

لحميّة *laḥmiyya* /n pl *-aat*/ **1a** piece of extraneous flesh, fleshy growth. **1b** adenoids. **2** inner fleshy surface (of the skin). *laḥmiyyit il-ʕeen [anat]* conjunctiva. ‖*laḥmiyyit il-fuxxaar* the unglazed surface of the earthenware.

ملحم *milḥim* /adj * and invar/ fleshy, fat. *mara milḥima* (or *milḥim*) a plump woman.

لحّم *laḥḥam*[2] **1** /vt/ to dress (a hide, by removal of flesh etc.). **2** /vi/ to become fleshy, become fat. - vn *talḥiim*; ava *milaḥḥam*.

اتلحّم *ʔitlaḥḥam*[2] /vi/ to be dressed (of a hide, by the removal of flesh, etc.). - iva *mitlaḥḥam*.

ل ح ن

لحن *laḥan (a)* /vi/ to make an error (in grammar, Koranic recitation etc.). - vn *laḥn*; ava *laaḥin*.

لحنة *laḥna* /inst n, pl *-aat*/ error, slip (in grammar, Koranic recitation etc.).

لحن *laḥn* /n pl *ʔalḥaan*/ melody or musical composition (especially vocal music).

لحّن *laḥḥan* /vt/ to set (words) to music. *laḥḥant-a-ha laḥn*[i] *samaaʕi* I composed the music for it by ear. - vn *talḥiin*; ava/pva *milaḥḥan*.

ملحّن *mulaḥḥin* /n */ composer of music (especially for songs).

اتلحّن *ʔitlaḥḥan* /vi/ to be set to music. - iva *mitlaḥḥan*.

ل ح و ق

لحوقى *luḥuuqi* /n/ type of shallow cooking pan.

ل ح ى

لحية *liḥya*↑ /n pl *liḥa*/ beard.

ل خ ب ط

لخبط *laxbaṭ* **1** /vt/ to muddle, confuse, make a mess of. *ḥikaaya tlaxbaṭ il-ʕaql* a matter that confuses the mind. ‖*ḥ-alaxbaṭ kayaan-u* I'll give him what for! - *ḥ-alaxbaṭ wiff-u* I'll give him a bloody nose! - *maa-lik milaxbaṭa wiff-ik kida* why have you slapped all that filthy make-up on your face? - *ʔaxallii-k timfi ʕal-ʕagiin ma-tlaxbaṭ-uu-f* ≈ I'll teach you manners! **2** /vi/ to act or speak improperly. *ḥa-ylaxbaṭ maʕaana fil-filuus* he'll try and cheat us. *laxbaṭu maʕaana fik-kalaam* they used bad language with us. - vn *laxbaṭa*; ava/pva *milaxbaṭ*.

لخبطة *laxbaṭa* /n pl *laxabiiṭ*/ muddle, confusion, mix-up. *ḥaṣalit laxbaṭa fit-tazaakir* there was a mix-up over the tickets.

اتلخبط *ʔitlaxbaṭ* /vi/ to be or become muddled up, become confused, become messed up. *laʕeet il-ḥikaaya tlaxbaṭit* I found that things had become muddled. - ava/iva *mitlaxbaṭ*.

ل خ خ

لخ *laxx (u)* /vi/ to tell a tall story. - vn *laxx, laxaxaan*; ava *laaxix*.

لخّاخ *laxxaax* /n * and pl *laxxaaxa*/ teller of tall stories.

ل خ ص

لخّص *laxxaṣ* /vt/ to summarize. - vn *talxiiṣ*; ava/pva *milaxxaṣ*.

ملخّص *mulaxxaṣ* /n pl *-aat*/ summary.

اتلخّص *ʔitlaxxaṣ* /vi/ to be summarized. - iva *mitlaxxaṣ*.

ل خ ف ن

لخفن *laxfin* /vt/ to muddle, confuse, perplex. - vn *laxfana*; ava/pva *milaxfin*.

اتلخفن *ʔitlaxfin* /vi/ to be muddled, confused or perplexed. - iva *mitlaxfin*.

ل خ ل خ[1]

لخلخ *laxlax* **1** /vt/ to loosen, allow play. **2** /vi/ to become loose, have play. *rukab-i laxlaxit min il-maʃy* my knees become rubbery from walking. - vn *laxlaxa*; ava/pva *milaxlax*.

اتلخلخ *ʔitlaxlax* = *laxlax* 2. - ava *mitlaxlax*.

[2] ل خ ل خ see م ل خ ل خ: *muluxlux*

ل خ م

لخم *laxam (i)* /vt/ to overtax, fluster and confuse with excessive demands. *goz-ha laxim-ha fil-wilaad* her husband has given her so many children she's at her wit's end. *ʔana malxuuma ʕaʃaan ma-kunt*[i]*-ʃ ʕamla ḥsaab-i ʔasaafir dilwaqti* I'm all in a muddle because I had not reckoned to be leaving now. - vn *laxma, laxamaan*; ava *laaxim*; pva *malxuum*.

لخمة *laxma* /n/ **1** confusion, embarrassment. ‖*lamma b-aqaf quddaam il-mudiir b-adrab laxma* when I stand before the director, I get confused. **2** /invar/ slow-witted person.

اتلخم *ʔitlaxam* /vi/ to be overtaxed, become flustered or confused. - ava/iva *mitlixim*.

استلخم *ʔistalxam* /vt/ to consider slow-witted. *ʔistalxamu l-muwaẓẓaf ig-gidiid wi-ḥaṭṭu ʕala dmaaɣ-u f-fuɣl*[i] *kull-u* seeing that the new employee was a bit dim they piled all the work onto him. - vn *ʔistilxaam*; ava/pva *mistalxam*.

ل د د see ل ز ز [2]: *ladd, ladiid*

ل د ع
لدع، لذع *ladaɛ* (also *ladax*) *(a)* /vt/ **1** to sting, bite (of a snake or scorpion), affect (s.o.) sharply with (s.th.). *ʔit-tiɛbaan ladaɛ-u mawwit-u* the snake bit him and killed him. *ladaɛ-ni ʔalam* he gave me a stinging slap. *ḥ-aldaɛ-ha gawaab yixallii-ha tgii-li ɛala mala wiff-a-ha* I'll send her a letter that will make her jump and come running to me. *ladaɛnaa-hum fakwa* we put in a strong complaint against them. **2** to steal, swipe. *raaḥ laadiɛ il-filuus* he went and swiped the money. ‖*ladaɛ il-ʔakla* he polished off the food. **3** *[metal]* to fuse. *ʔif-faraara ladaɛit il-ʔablatiin* the sparks fused the contact breaker. — /vi/ **4** *[metal]* to become fused. - vn *ladɛ, ladaɛaan*; ava *laadiɛ*; pva *malduuɛ*.

لدعة، لذعة *ladɛa* /n pl *-aat*/ **1** (also *ladɣa*[1]) /inst n/ a sting. **2** *[metal]* spot-solder, spot-weld.

لاذع *laaziɛ*↑ /adj/ biting, harsh and hurtful. *naqd laaziɛ* biting criticism.

ملدوع، ملذوع *malduuɛ* /n pl *maladiiɛ*/ *[coarse]* son of a bitch. *ʔil-ḥitta di kull-a-ha naas maladiiɛ* this whole place is (filled with) rotten bastards. ‖*ṭallaɛ maladiiɛ (-i) [coarse]* he gave (me) hell.

ملدوعة، ملذوعة *malduuɛa* /n pl *maladiiɛ*/ *[coarse]* loose woman, whore, tart. *ʔibn malduuɛa* ≈ son of a bitch.

اتلدع *ʔitladaɛ* (also *ʔitladax*) /vi/ passive of *ladaɛ*. - iva *mitlidiɛ*.

[1] ل د غ
يلدغ *yulduɣ (fik-kalaam)* /imperf v/ to speak with defective pronunciation (especially rhotacism). - vn *ladaɣaan*.

لدغة *ladɣa*[2] /n pl *-aat*/ instance of defective pronunciation (especially rhotacism).

ألدغ *ʔaldaɣ* /adj, fem *ladɣa*, pl *ludɣ*/ having defective pronunciation (especially rhotacism).

[2] ل د غ see ل د ع: *ladax, ladɣa*[1], *ʔitladax*

[1] ل د ن
لدّن *laddin* /vt/ *[rur]* to dry out (bread) by baking it a second time. *ɛeef miladdin* twice-baked bread. ‖*sitt mladdina* a skinny or bony woman. - vn *taldiin*; ava/pva *miladdin*.

اتلدّن *ʔitladdin* /vi/ passive of *laddin*. - iva *mitladdin*.

[2] ل د ن
لداين *ladaayin*↑ /pl n/ plastics.

ل ذ ذ see ل ز ز [2]

ل ذ ع see ل د ع

ل ر ج
لارج *larj* <Fr *large*> /adj invar/ generous.

ل ر ن ج
لارنج *laring* <P *nârang*> /coll n/ Seville oranges. - also *naring*.

ل ز ا ل ك see ز ا: *li-zaalik*

ل ز ج
لزج *lazig, lizig* /adj/ **1** viscous. **2** boorish.
لزوجة *luzuuga* /n/ viscosity.

[1] ل ز ز
لزّ *lazz*[1] *(i)* /vt/ to push, shove. *lazz it-ṭarabeeza ɛal-ḥeeṭa* he pushed the table against the wall. ‖*lazzuu ɛalɣa ṭayyiba* they gave him a good thrashing. - vn *lazz, lazazaan*; ava *laaziz*; pva *malzuuz*.

اتلزّ *ʔitlazz*[1] /vi/ to be pushed, be shoved. ‖*ʔitlazz*[a] *ɛalɣa suxna mbaariḥ* he got a thorough beating yesterday. - iva *mitlazz*.

[2] ل ز ز
لذّ *lazz*[2] *(i)* /vt/ to please, delight. *yilizz-u ʔinnu yiḍrab* he gets pleasure out of beating. *di ḥaaga bi-tlizz-u ʔinnu yiɛmil-ha* this is something which he is delighted to do. ‖*mimma lazza wa-ṭaab*↑ ≈ the choicest of food. - vn *lazazaan*; ava *laaziz*; pva *malzuuz*.

لذّ *ladd (i)* /vi/ to appeal, meet with approval. *fakl-a-ha ladd*[a] *ɛalayya* her appearance appealed to me. *ʔinfa-lla l-ʔakl ylidd*[a] *ɛaleek* I hope you find the food to your taste. - vn *ladd, ladadaan*; ava *laadid*.

لذّة *lazza* /n pl *-aat*/ pleasure. *lazza roḥiyya* a spiritual joy.

لذيذ *laziiz* /adj pl *luzaaz, luzaza*/ nice, pleasant. *ʔakl laziiz* tasty food. *bint laziiza* a sweet girl.

لديد *ladiid*↓: *ladiid ya tirmis [vendor's cry]* delicious lupin seeds!

ألذّ *ʔalazz* /el/ more/most nice or pleasant.

ملذّات *malazzaat* /pl n/ sensual pleasures.

اتلذّ *ʔitlazz*[2] /vi/ to obtain sensual pleasure. *fii naas ma-titlazz-ʃ mil-ʔakl il-masluuq* there are people who don't enjoy boiled food. - ava *mitlazz*.

اتلذّذ *ʔitlazziz* /vi/ to experience enjoyment, feel pleasure. *ʔitlazzizt min il-musiiqa* I enjoyed the music. - ava *mitlazziz*.

التذّ *ʔiltazz* = *ʔitlazz*. -ava *miltizz*.

استلذّ *ʔistilazz, ʔistalazz* **1** /vt/ to find enjoyable, find pleasurable. *ʔistilazz il-ʔakl' ʿaam faṭṭab ʿalee* he found the food delicious so he polished it off. **2** /vi/ to find enjoyment, find pleasure. *ʔistalazz' lid-dafa ʿaam naam* finding comfort in the warmth, he went to sleep. -vn *ʔistilzaaz*; ava *mistilazz, mistalazz*.

ل ز ع see ل د ع: *laaziɛ*

ل ز ق

لزق *liziq (a)* /vi/ to adhere, stick. *ʔil-ʔaɛʃaab il-baḥriyya ʔilli b-tilzaq ɛal-markib* the seaweed which adheres to the ship. -vn *lazaqaan, liziiq*; ava *laaziq*.

لزق *lazaq (a)* /vt/ **1** to stick, affix (with adhesive matter). *bi-yilzaq il-xaʃab fi-baɛḍ-u bil-ṿira* he glues the wood together. **2** to slap. *lazaq-ni ɛala sdaaṿ-i* he slapped me on my cheeks. -vn *lazq*; ava *laaziq*; pva *malzuuq*.

لزيق *liziiq* /n/ adhesive matter.

لزق *lazq* /vn/ ‖*xabṭ' lazq* abruptly and bluntly, as in *raaḥ xabṭ' lazq" ḥaka l-ḥikaaya* he plunged right into the story, he blurted out the story.

لزقة *lazqa* /n pl *-aat, luzaq*/ **1** sticking plaster, adhesive tape. ‖*huwwa lazqa b-ṿira* ≈ is one never to be rid of him? **2** poultice.

لزّاق *lazzaaq* **1** /adj/ sticky, adhesive. *waraq lazzaaq* masking tape, sticky tape. **2** /n/ glue.

ملزقة *malzaqa* /n pl *malaaziq*/ clamp.

اتلزق *ʔitlazaq* /vi/ **1** to be stuck, be affixed (with adhesive substance). **2** to adhere, attach oneself. *ʔitlizig gamb il-baab* stick close to the door! - ava/iva *mitlizig*.

لزّق *lazzaq* **1** /vt/ to affix, stick. ‖*lazzaq it-tuhma f-ṣaḥb-u* he pinned the rap on his friend. **2** to make (dung) into cakes. *ḥatta g-gilla ylazzaquu-ha wi-ywallaɛu biiha* even cattle dung they mix with straw and shape into cakes to use for fuel. — /vi/ **3** to stick, be sticky. *laqeet il-mixadda ɛaleeha buqɛa ṣafra bi-tlazzaq* I found that the pillow had a sticky yellow mark on it. -vn *talziiq*; ava/pva *milazzaq*.

اتلزّق *ʔitlazzaq* /vi/ **1** to be affixed, be stuck. **2** be made into cakes (of dung). -iva *mitlazzaq*.

ل ز م

لزم *lizim (a)* **1** /vt and vi/ to be necessary (for). *yilzam-ak ḥaaga* or *yilzam-lak ḥaaga* or *lazm-ak ḥaaga* or *lazim-lak ḥaaga* do you need anything? *lizim-ak ḥaaga* etc. did you need anything? *kaan yilzam-ak ḥaaga* were you in need of anything? *yilzam-ak badla* you need a suit. *tilzam-ak il-badla di* do you need this suit? *ʔil-ḥagaat illi ma-tilzam-naa-ʃ* the things we don't need. ‖*yilzam xidma* can I be of service? -*ʔilli ma-maɛuu-ʃ ma-yilzam-uu-ʃ [prov]* he who has nothing cannot (afford to) need anything. **2** /vt/ to keep to. *ʔilzam ḥadd-ak* (or *ḥuduud-ak*) (keep to your limits!) mind your own business! *ʔilzam ʔadab-ak* mind your manners! -vn *lizuum, luzuum*; ava *laazim*; pva *malzuum*.

لزم *lazam' (i)* /vt/ to hold responsible. *ʔinta ɛamalt-a-ha tibqa malzuum biiha* you're the one who did it so you're responsible. -vn *lizuum, luzuum*; ava *laazim*; pva *malzuum*.

لزوم *lizuum, luzuum*/n/ **1** need. *ma-fii-ʃ lizuum tikallif nafs-ak* there's no need for you to trouble yourself. *ɛand il-luzuum* at need, when necessary. **2** use, function. *ʔil-bafra lizum-ha l-laff is-sagaayir* cigarette paper is used for rolling cigarettes.

لازم *laazim'* **1** /ava/ ‖*ʔil-laazim* what is necessary, as in *takliif ʔaktar min il-laazim* more trouble than necessary, *qul-li l-laazim wi-bass* just tell me what is necessary, *ʔit-tamargiyya ɛamalit laha l-laazim* the nurse gave her the required treatment, *ʔiddii-lu l-laazim bitaaɛ-u b-ḥees ʔinnu ma-yiftikii-ʃ* give him what he needs so he won't complain. **2** /invar/ **2a** modal of necessity. *laazim tikfif ɛand' duktoor kiwayyis* you must be examined by a good doctor. *miʃ laazim yiigi* (1) he must not come. (2) he need not come. (3) he should not come. *kaan laazim titɛaʃʃa maɛaana* you (really) should have had supper with us. **2b** modal of probability. *laazim rawwaḥit* she must have gone home. *ʔilli xad ir-radyu laazim yikuun ʔaxuu-k* it must be your brother who took the radio.

لازمة *lazma* /n/ **1** need. *lamma ykuun fii lazma lil-ɛarabiyya* when there is a need for the car. *ma-lhaa-ʃ lazma* it is unnecessary. **2** use, function. *lazmit is-sanduuq ʔinnu yɛallim il-ḥarakaat* the function of the vaulting box is to teach exercises. — /pl *-aat*/ **3** *[mus]* instrumental interlude in a song. — /pl *lawaazim*/ **4** mannerism. *kitiir min il-mudarrisiin liihum lawaazim tidaḥḥak* many teachers have funny mannerisms.

لوازم *lawaazim* /pl n/ equipment, requisites. *lawaazim il-xayyaṭiin* tailors' requisites.

لزم *lazam²* /adv/ in the closest propinquity. *bet-hum gambina lazam* their house is right beside us. *ʔaxuuya lazam* my german brother.

ألزم *ʔalzam'* /el/ more/most necessary.

ملزمة *malzama* /n pl *malaazim, malzamaat*/ **1** *[print]* signature (of eight or sixteen sheets). **2** *[acad]* set of stencilled lecture notes.

اتلزم ʔitlazam /vi/ passive of *lazam*[1]. - iva *mitlizim*.
لزّم *lazzim* /vt/ to hold responsible. *lamma kasar il-ɛagala lazzimuu biiha* when he broke the bicycle they held him responsible for it. - vn *talziim*; ava/pva *milazzim*.
اتلزّم *ʔitlazzim* /vi/ to be held responsible. - iva *mitlazzim*.
لازم *laazim*[2] /vt/ **1** to stick to, adhere to. *ʔil-faqr*[i] *mlazim-hum* poverty clings to them. ‖*ya-lli l-gooza mlazmaa-k* you who are never without a *gooza*. - *sitt*[i] *mlazma l-firaaf* a bed-ridden woman. **2** to accompany (musically). - vn *milazma*; ava *milaazim*.
ملازم *mulaazim* /n */ **1** (also *mulaazim taani*) *[mil]* second-lieutenant. ‖*mulaazim ʔawwal* first-lieutenant. **2** *[nav]* sub-lieutenant. ‖*mulaazim taani* midshipman, acting sub-lieutenant.
ألزم *ʔalzam*[2] = *lazam*[1]. ‖*sinn*[i] *ʔilzaam* school age. - vn *ʔilzaam*; ava *milzim, mulzim*; pva *mulzam*.
إلزامى *ʔilzaami* /adj/ compulsory. *taɛliim ʔilzaami* compulsory schooling.
التزم *ʔiltazam* /vi/ **1** to undertake an obligation or responsibility. *kull*[i] *waaḥid minhum bi-yiltizim bi-ḥaaga muɛayyana* each one of them is responsible for a particular thing. **2** to adhere, be committed. *fii naas miltizmiin bil-lawaayiḥ* there are people who stick to the rules. **3** *[obsol]* to be the holder of a concession or franchise. - vn *ʔiltizaam*; ava *miltizim, multazim*↑.
التزام *ʔiltizaam* /n pl *-aat*/ **1** obligation, responsibility. **2** *[obsol]* concession, franchise.
ملتزم *multazim* /n */ **1** adherent. **2** *[obsol]* holder of a concession or franchise.
استلزم *ʔistalzam*↑ /vt/ to require, deem necessary. - vn *ʔistilzaam*; ava *mistalzim*; pva *mustalzam*.
مستلزمات *mustalzamaat* /pl n/ equipment, requisites.

ل س

لثة *lisa* or *lasa* /n pl *-aat*/ gum (of the teeth). *kayy il-lisa* cauterization of the gums. - also *laasa*.

ل س ت

لستة *lista* <It *lista*> /n pl *-aat, lisat*/ **1** list (of any kind). **2** bill of fare, menu.

ل س س ا

لسّه *lissa* /adv, w pron suff *lissaa-*/ **1** still, (not) yet. *huwwa lissa ṣuɣayyar* he's still young. *lissaa-ku ma-ruḥtuu-ʃ* haven't you gone yet? *lissa talaata saaɣ* still three piastres (to go, owing etc.). *saafir lissa ma-fii-ʃ gumɛa* it's not yet a week since he left. *lissa ḥ-awaddi l-kutub* I've still to deliver the books. *gah walla lissa* has he come yet or not? *ʃuft il-mudiir*. - *lissa* 'Have you seen the manager?' 'Not yet.' ‖*huwwa-nta lissa ʃuft*[a] *ḥaaga* you haven't seen anything yet! - *lissa badri* it's early yet, there's still plenty of time (said, e.g., to encourage departing guests to stay longer). - *lissa badri ɛala* it's still too soon for, as in *ʔil-baṭṭiix ṭiliɛ laakin it-tiin lissa badri ɛalee* water-melon is in season but it will be a while before the figs come in, *ʔiṭ-ṭifl*[i] *ṣɣayyar - lissa badri ɛala l-maʃy* the baby is very young - it's too early for him to walk. - *ʔistaḥmilna ktiir - wi-lissa* we've put up with a lot, and there's more to come! **2** just, just now, only recently. *di lissa kaanit waqfa gambi min sanya* she was standing next to me just a second ago. *da-nti lissa diik in-nahaar kunti b-titkallimi ɛan il-gawaaz* why, only the other day you were talking about marriage! *ʔis-sitt illi kaanit lissa gayya min ɛand id-duktuur farhadit* the lady who had just come from the doctor's fainted.

ل س ع

لسع *lasaɛ (a)* /vt/ **1** to scorch. *ʔil-makwa s-suxna lasaɛit il-huduum* the hot iron scorched the clothes. **2** to sting. *lasaɛit-ni naḥla* a bee stung me. ‖*lasaɛ-u ɋalam* he gave him a stinging slap. **3** *[slang]* to steal. *lasaɛ minni ktaab* he pinched a book from me. — /vi/ **4** to become stinging or acrid (of taste). - vn *lasɛ*; ava *laasiɛ*; pva *malsuuɛ*.
لسعة *lasɛa* /inst n, pl *-aat*/ a scorch, a sting, etc.
ملسوع *malsuuɛ* /adj */ jumpy, easily startled.
اتلسع *ʔitlasaɛ* /vi/ **1** to be scorched. *xallii-ha titlisiɛ fuwayya b-naar il-ḥubb* let her be scorched a little by the fire of love. **2** to be stung. **3** *[slang]* to be stolen. - iva *mitlisiɛ*.

ل س ك

لسكا *laska* <It *lasco*> /n/ *[naut]* slack (of a rope). *ʔiɛmil laska* slacken the rope!
لسّك *lassik* /vi/ *[naut]* to slacken a rope. - vn *talsiik*; ava *milassik*.

ل س ل ك

لاسلكى *lasilki* /n/ wireless.

ل س ن

لسان *lisaan* /n pl *lisína*; *ʔilsina*/ **1** tongue (of an animal or human). *ʔism-u ɛala kull*[i] *lsaan* his name is on every tongue. *nuṣṣ*[i] *lsaan wi-snaan ɛiira* half a tongue and false teeth (said of one who does not speak well). *yikkallim ɛan lisaan-i* he speaks on my behalf. *ʔiqṭaɛ lisaan ɛadiww-ak bis-salaamu ɛaleekum [prov]* (cut the

tongue of your enemy with a greeting) disarm your enemy by means of courtesy. *lisaan-ak ḥuṣaan-ak ʕin ṣunt-u ṣaan-ak [prov]* your tongue is (like) your horse; if you take care of it, it will take care of you. ‖ expressions referring to 'pulled' and 'long' tongues indicate insolence, thus *lisaan-u ṭawiil* (his tongue is long), *huwwa magruur min lisaan-u* (he has been pulled by his tongue), *ʒayy illi d-daaya garraa min lisaan-u* (like one whose tongue was pulled by the midwife), *mitlaffaʕ bi-lsaan-u* (his tongue is so long that he can be wrapped in it). - *ʕaayiz sikirteer milyoon lisaan fi-buqq-u* he wants a secretary who can deal with a million things at once. - *waakil lisaan gidy* he has eaten a billy goat's tongue ≈ he talks too much. **2a** (roughly) tongue-shaped object. *lisaan gazma* shoe-tongue. *lisaan ʒarf* envelope flap. **2b** spit (of land). **2c** wedge. **2d** *[carp]* a tenon. — /pl also *ʔalsun/* **3** (foreign) language, (foreign) tongue. *kulliyyit il-ʔalsun* (Ain Shams University) College for foreign languages. ‖ *ʔit-takallum bil-ʔalsun [Chr]* speaking with tongues.

لسّن *lassin* /vi/ **1** to hang out, loll (of the tongue, from tiredness). **2** to speak unkindly or slanderously. *bi-ylassin ʕalayya* he says bad things about me. — /vt/ **3** to wedge. - vn *talsiin*; ava/pva *milassin*.

اتلسّن *ʔitlassin* /vi/ (impersonal) passive of *lassin* 2. *ʔil-bint di tlassin ʕaleeha ktiir* this girl has been the subject of a lot of slanderous gossip. - iva *mitlassin*.

ل س ن س

ليسانس *lisans, lasans* <Fr *licence*> /n pl *-aat*/ degree of Bachelor of Arts. *lisans ḥuqquq* bachelor's degree in law.

ل س و ع

لسوع *laswaʕ* **1** /vt/ **1a** to scorch. *ʔin-naar laswaʕit ʔiid-i* the fire scorched my hand. **1b** to give a scorching or stinging pain to. *ʔik-kurbaag laswaʕ riglay-ya* the whip stung my legs. **2** /vi/ **2a** to be scorched. **2b** to burn or sting with pain. - vn *laswaʕa*; ava/pva *milaswaʕ*.

اتلسوع *ʔitlaswaʕ* /vi/ **1** = *laswaʕ* 2. **2** be scorched on top and undercooked inside (of a dish of food). - iva *mitlaswaʕ*.

ل س ى ه

لاسيه *laseeh* <Fr *lacet*> /n/ type of lace work employing braid.

ل س ى و ن

لوسيون *lusyoon* <Fr> /n pl *-aat*/ lotion.

ل ش ى

اتلاشى *ʔitlaaʃa* **1** /vt/ to avoid. *ḥaawil titlaaʃa l-ʁalaṭ il-marra g-gayya* try to avoid making a mistake next time. **2** /vi/ to disappear. - vn *talaaʃi*; ava *mitlaaʃi*.

ل ص ص

لصّ *liṣṣ* /n pl *luṣuuṣ*/ thief, robber.

لصوصيّة *luṣuṣiyya* /n/ thievery.

ألصّ *ʔalaṣṣ* /el/ more/most thieving. *ma-ʃuft-ʃ ʔalaṣṣ minnu fiʃ-ʃirka* he's the biggest thief I know in the whole company.

اتلصّص *ʔitlaṣṣaṣ* /vi/ to snoop, spy. - vn *talaṣṣuṣ*; ava *mitlaṣṣaṣ*.

ل ص ق

لصق *laṣaq, laṣaq (a)* /vt/ to glue, stick, affix. ‖ *ʔit-tarkiib bil-laṣq [hort]* approach grafting. - vn *laṣq, laṣq*; ava *laaṣiq, laaṣiq*; pva *malṣuuq, malṣuuq*.

لصق *laṣq, laṣq* /n/ adhesion, adhesiveness. *ma-lhaa-ʃ ʔayy quwwit laṣq* it has no sticking power.

ملصقات *mulṣaqaat, mulṣaqaat* /pl n/ notices, posters, advertisements.

اتلصق *ʔitlaṣaq* /vi/ to be glued, be stuck, be affixed. - iva *mitliṣiq*.

التصاق *ʔiltiṣaaq, ʔiltiṣaaq: ʔiltiṣaaq ir-rukbiteen* knock-kneedness. *ʔiltiṣaaq fil-maṣariin* intestinal lesions.

ل ص م

لصّم *laṣṣam* /vt/ to do a temporary or slapdash fixing-up job on (s.th.). *laṣṣamit il-fustaan li-ʁaayit ma tgiib waaḥid gidiid* she fixed up the (old) dress to carry her through till she could get a new one. *laṣṣam il-baab li-ʁaayit ma yaaxud il-filuus wi-yimʃi* he has fixed the door so that it will just hang together until he gets his money and goes away. - vn *talṣiim*; ava/pva *milaṣṣam*.

تلصيمة *talṣiima* /inst n, pl *-aat*/ a temporary or slapdash fixing-up job.

اتلصّم *ʔitlaṣṣam* /vi/ **1** to be temporarily or sloppily fixed. **2** to find or seize on a pretext. *ʔitlaṣṣamit-lu ʕala kilma w-sabit-lu l-beet* she seized upon a word (he said) as an excuse for leaving him. - ava/iva *mitlaṣṣam*.

ل ض م

لضم *laḍam (u)* **1** /vt/ to thread. *laḍm il-ʔibra* threading the needle. *laḍamit sabaʕ ḥabbaat fil-fatla* she strung seven beads on the string. **2** /vi/ to connect firmly, join together closely. - vn *laḍm, laḍamaan*; ava *laaḍim*; pva *malḍuum*.

¶ *laḍam maʕa* to join with (in conversation etc.). *laḍam*

maɛaa fik-kalaam he got into conversation with him. *laḍamu maɛa baɛḍ[i] fif-fitiima* they started insulting one another.

اتلضم *ʔitlaḍam* /vi/ to be threaded. - iva *mitliḍim*.

ل ض ى

اللضى *ʔil-laḍa*: such expressions as *miʃ laaɋi l-laḍa, ma-ɛanduu-ʃ il-laḍa* etc. he is penniless.

اتلضّى *ʔitlaḍḍa* /vi/ to be tortured, suffer pangs (of love, hunger etc.). *ʔitlaḍḍa mig-guuɛ* he was starved. - ava *mitlaḍḍi*.

ل ط خ

لطخ *laṭax (u, i)* /vt/ **1** to smear, soil. *laṭaxu l-ħeeṭa b-ṭiin* they smeared the wall with mud. *laṭax ɋamiiṣ-u b-damm* he got blood on his shirt. **2** to deal (a blow or the like) to. - vn *laṭx, laṭaxaaṅ*; ava *laaṭix*; pva *malṭuux*.

لطخ *laṭx* /n pl *luṭuux, luṭúxa*/ obtuse and rude person, stupid and boorish person.

لطخيّة *laṭxiyya* /inst n, pl *-aat*/ a smearing. *laṭaxna l-ħeeṭa taani laṭxiyya w-bardu ʃaɋɋaɋit* we plastered over the wall a second time but it still developed cracks.

ألطخ *ʔalṭax* /el/ more/most obtuse, stupid, clumsy etc.

اتلطخ *ʔitlaṭax* /vi/ **1** to be smeared, be soiled. **2** to be dealt a blow or the like. - iva *mitliṭix*.

لطّخ *laṭṭax* /vt/ **1** to smear or soil thoroughly. **2** to deal many blows to. — /vi/ **3a** to talk insultingly. **3b** to talk nonsensically. - vn *talṭiix*; ava/pva *milaṭṭax*.

اتلطّخ *ʔitlaṭṭax* /vi/ to be thoroughly smeared or soiled. - iva *mitlaṭṭax*.

استلطخ *ʔistalṭax* /vt/ **1** to consider dimwitted. **2** to select for stupidity. *ʔistalṭaxu r-raagil wi-diħku ɛalee w-xadu fluus-u* they picked on the man as a fool, tricked him and got his money. — /vi/ **3** to behave boorishly. *ʔinta ħa-tistalṭax ɛala miin* what do you think we are for you to be rude to us? - vn *ʔistilṭaax*; ava/pva *mistalṭax*.

ل ط ز ا ن

لطزان، لاطزان *laṭazaan* (also *xaʃab laṭazaan*) /n/ whitewood planking. - also *latazaan*.

لاطزانة *laṭazaana* = *laṭazaan*. - also *latazaana, tazaana*.

ل ط ش

لطش *laṭaʃ (u)* /vt/ **1** to steal, filch. *ʔil-ɛiyaal laṭaʃu l-maħfaẓa btaɛt-i* the kids swiped my wallet. ‖ *ʃayfin-na miħtagin-hum yulṭufu zayy[i] ma humma ɋayziin* they realize that we're dependent on them so they take us for all they can get. **2** to hit, strike. *ʔil-ɋarabiyya laṭaʃit-u* the car struck him. *ʔil-balṭagi laṭaʃ-ha ɋalameen* the thug knocked her about. *ʔilṭuf il-ħeeṭa wiff[i] buuya* slap a coat of paint on the wall. ‖ *damm-u yulṭuf* he's antipathetic. - *kubbaayit biira b-tulṭuf-u* he gets drunk on one glass of beer. **3** to scorch. *ʔin-naar laṭaʃit huduum-u* the fire scorched his clothes. ‖ *ʔif-fams[i] laṭaʃit-u* he got sunstroke. — /vi/ **4** to be scorched. *ʔil-xaʃaba laṭaʃit* the piece of wood got scorched. - vn *laṭf*; ava *laaṭif*; pva *malṭuuf*.

لطش *laṭf* /n/ *[carp]* process of attaching something to a surface without using joints (i.e. by gluing, nailing etc.).

لطشة *laṭfa* /n pl *-aat*/ **1** instance noun of *laṭf*. *laṭfit ʃams* (bout of) sunstroke. **2** blot, smudge.

ملطوش *malṭuuf* **1** /adj * and pl *malaṭiif*/ touched in the head. **2** /n pl *malaṭiif*/ *[slang, deris]* an Egyptian pound.

لطّاش *laṭṭaaf* /n pl *-aat*/ *[text]* rubbing leather (of a loom).

لطّاشة *laṭṭaaʃa* /n pl *-aat*/ **1** leather bandage to prevent a horse's legs from knocking together. **2** = *laṭṭaaf*.

ملطشة *malṭaʃa* /n/ butt (for jokes, scorn, anger etc.).

اتلطش *ʔitlaṭaf* /vi/ **1** to be stolen, be filched. **2** to be hit, be struck. **3** to be brushed against. - iva *mitliṭif*.

لطّش *laṭṭaf* /vt/ **1** to slap, hit. *xud-u laṭṭaf-lu wiff-u* take him and give his face a slapping. **2** to blotch, blot, make blotchy. — /vi/ **3** to flail or blunder about as though in the dark, behave in a slapdash manner, make a mess of things. *maaʃi ylaṭṭaf fiḍ-ḍalma* going blundering about in the dark. *ʔid-duktuur laṭṭaf fit-tafxiiṣ* the doctor botched the diagnosis. *ʔid-dinya mlaṭṭaʃa maɛaaya* life messes me around. **4** to blotch, blot. *ʔiṣ-ṣabɣa laṭṭaʃit* the dye blotched. *mumkin il-ħibr[i] ylaṭṭaf fil-waraɋ* the ink may make blotches on the paper. - vn *talṭiif*; ava/pva *milaṭṭaf*.

اتلطّش *ʔitlaṭṭaf* /vi/ passive of *laṭṭaf*. - iva *mitlaṭṭaf*.

[1] ل ط ط

لطّ *laṭṭ (u)* /vt/ to touch (lightly). *ʔil-ħagar id-daayir la budd[i] min laṭṭ-u [prov]* ≈ a rolling stone is bound to get a bit of a knock. - vn *laṭṭ, laṭaṭaan*; ava *laaṭiṭ*; pva *malṭuuṭ*.

لطّة *laṭṭa* /inst n, pl *-aat*/ a slight touch.

اتلطّ *ʔitlaṭṭ* /vi/ to be touched. ‖ *ʔinta tlaṭṭeet fi-raas-ak* have you gone crazy? - iva *mitlaṭṭ*.

[2] ل ط ط

لطّ *luṭṭ* <Engl> /n pl *-aat*/ lot (in an auction).

ل ط ع

لطع *laṭaɛ (a)* /vt/ **1** to stick (s.th. or s.o. onto s.th.). *ʔiddeet-u falluut laṭaɛ-u fil-ħeeṭa* I gave him a kick that had him flat against the wall. ‖ *ʔilṭaɛ il-kariima* kiss the

hand. **2** to leave (s.o.) stranded. -vn *laṭaɛaan, laṭɛ, laṭɛa*; ava *laaṭiɛ*; pva *malṭuuɛ*.

لطعة *laṭɛa*[1] /pl *-aat*/ instance noun of *laṭɛ*.

لطعة *luṭɛa, laṭɛa*[2] /n pl *luṭaɛ*/ patch or cluster (of insect eggs, on leaves, plants etc.).

اتلطع *ʔitlaṭaɛ* /vi/ to be kept waiting. -iva *mitliṭiɛ*.

اتلطّع *ʔitlaṭṭaɛ* /vi/ to delay, hang about. *ʔitlaṭṭaɛ gamb il-ḥeeṭa* he hung about by the wall. *kull*[i] *ma ʔabɛat-ha f-fuɣla timfi titlaṭṭaɛ* whenever I send her on an errand she dawdles along. -ava *mitlaṭṭaɛ*.

ل ط ف

لطف *laṭaf (u)* /vi/ to show mercy (of God). *ʔulṭuf bi-ɛabiid-ak ya rabb* have mercy on Thy servants, Lord (prayer used in time of hardship). *ʔalla yulṭuf-bu* may God be kind to him (implying mental deficiency). -vn *luṭf*; ava *laaṭif*; pva *malṭuuf*.

لطف *luṭf* **1** /n pl *ʔalṭaaf*/ mercy, kindness. *luṭf-ak ya rabb* (I seek) Thy mercy, Lord. *ya xafiyy il-ʔalṭaaf naggii-na mimma nxaaf* O possessor of unknown mercies, save us from what we fear! ‖ *ʔil-luṭf*[a] *ɛand il-qaḍa* (may God show) mercy in the administration of fate. — /no pl/ **2** gentility. *raagil kull-u luṭf* he's gentility itself. *da bass*[i] *min luṭf-ak* ≈ you are too kind (in reply to a compliment). **3** silliness, softness in the head. *ɛandu luṭf* and *ḥaṣal-lu luṭf* he's touched.

لطافة *laṭaafa* /n/ charm, pleasantness. ‖ *bi-ṣanɛit laṭaafa* with persuasive charm.

لطيف *laṭiif* **1** /adj pl *luṭaaf*/ pleasant, charming. *ʔil-bint*[i] *di ʃakl-a-ha laṭiif* this girl has a pleasant appearance. *nukat laṭiifa* amusing jokes. *ʔig-gins il-laṭiif* the fair sex. **2** /n/ Merciful One (epithet of God). *ya laṭiif* (1) God forbid! (2) God protect us!

ألطف *ʔalṭaf* /el/ more/most pleasant, agreeable, nice or charming.

لطّف *laṭṭaf* **1** /vt/ to make pleasant or refreshing. *ruff*[i] *mayya barra tlaṭṭaf ig-gaww* sprinkle water outside the door to cool the air. *ʔifrab ḥaaga saqɛa tlaṭṭaf qalb-ak* have a cold drink to refresh you. **2** /vi/ to become pleasant. *ʔig-gaww*[i] *laṭṭaf* the weather grew pleasant. -vn *talṭiif*; ava/pva *milaṭṭaf*.

لاطف *laaṭif* /vt/ to humour, indulge, be nice to. -vn *milaṭfa, mulaṭfa*; ava *milaaṭif*.

ملاطف *milaaṭif* /adj */ companionable.

استلطف *ʔistalṭaf* /vt/ **1** to consider agreeable or pleasant. **2** to select for pleasantness. — /vi/ **3** to behave in a pleasant manner. -vn *ʔistilṭaaf*; ava *mistalṭaf*.

ل ط م

لطم *laṭam (u)* **1**[1] /vt/ to slap. **2** /vi/ to slap one's face (in grief or lamentation). ‖ *ɛaayiz ganaaza yiḍbaɛ fiiha laṭm* he wants (to find) a funeral where he can slap his face to his heart's content (of one who looks for other people's troubles to enjoy). -vn *laṭm*; ava *laaṭim*; pva *malṭuum*.

لطمة *laṭma* /inst n, pl *-aat*/ a slap.

ملطمة *malṭama* /n invar/ butt (for anger, scorn etc.).

لطّم *laṭṭam* /vt/ to knock repeatedly one way and another. *ʔiz-zaman ẓalam-ni w-laṭṭam-ni* life has been unfair to me and given me some hard knocks. ‖ *raagil milaṭṭam* a hard-bitten person, hard nut to crack. -vn *talṭiim*; ava/pva *milaṭṭam*.

اتلطّم *ʔitlaṭṭam* /vi/ **1** to be knocked about, be pushed around. *baqeet ʔatlaṭṭam fi-ḥayaat-i* life began to be hard for me. *ʔitlaṭṭamt*[i] *min maktab li-maktab* I was pushed around from office to office. **2** to be hardened by experience. *ʔil-waẓiifa di tiḥtaag waaḥid mitlaṭṭam fiwayya* this job requires someone seasoned by a bit of experience. -iva *mitlaṭṭam*.

ل ظ ل ظ

لظلظ *laẓlaẓ* /vi/ to become plump. -vn *laẓlaẓa*; ava *milaẓlaẓ*.

لظلوظ *laẓluuẓ* /adj * and pl *laẓaliiẓ*/ plump.

ل ظ ى see ل ض ى

ل ع ب

لعب *liɛib (a)* /vt/ **1a** to play (a game or sport). *bi-yilɛabu koora* they play football. *b-alɛab gumbaaz* I do gymnastics. *bi-nilɛab il-qumaar* we gamble. ‖ *liɛib it-talat waraqaat ɛaleehum* he cheated them. **1b** to make a play with. *liɛib ik-koora li-mḥammad* he passed the ball to Muhammad. *liɛibt iz-zahr* I threw the dice. *liɛib is-sabɛa* he played the seven. **1c** to play (a musical instrument). *bi-yilɛab gitaar* he plays the guitar. **2** to act (a role or part). *liɛibt*[i] *door il-baṭal* I took the part of the hero. — /vi/ **3** to play. *ʔil-ɛiyaal bi-yilɛabu fig-gineena* the children are playing in the garden. *xud baal-ak mil-faras - bi-yilɛab kitiir* watch out for the horse - it's very frisky. ‖ *liɛibt*[i] *fil-burṣa* I gambled on the stock exchange. - *bi-yilɛab bi-deel-u* (1) he's not straight, he messes around. (2) he sleeps around, he's not faithful. **4** to play around, tinker, mess around. *ʔil-ɛiyaal liɛbu fir-radyu kassaruu* the children tinkered around with the radio and broke it. *bi-yilɛab fi-manaxiir-u* he picks his nose. **5a** to be loose (of parts). *ʔil-ʔaks*[i] *b-yilɛab* the axle has some play. **5b** to wag, wiggle. *juuf ik-kalb in-nuunu deel-u b-yilɛab ʔizzaay* see how the darling little dog's tail wags! **5c** to become choppy or rough (of the sea). **5d** to heave, pitch (of a

ship). - vn *liɛb*; ava *laaɛib*; pva *malɛuub*.
¶ *liɛib ɛala* to cheat, dupe.
لعبة *liɛba* /n pl *liɛab, liɛbaat*/ **1** toy. — /pl *ʔalɛaab*/ **2a** game, sport. *ʔalɛaab il-quwa* field and track sports (including weightlifting). **2b** move, pass, shot etc. in a game or sport. **3** trick, stratagem. *liɛba makfuufa* an obvious play. *ʔalɛaab siḥriyya* conjuring tricks. **4** act or turn (in a circus). *ʔalɛaab ʔakrubatiyya* acrobatic turns.
لعبى *liɛabi* /adj pl *-iyya*/ feckless, frivolous.
لاعب *laaɛib*[1] /n */ **1** player. **2** (circus) performer.
ملعوب *malɛuub* **1** /pva/ ‖*di kaanit malɛuubą* that was deliberate, that was no fluke. - *da malɛuub fii [coarse]* he's a queer. **2** /n pl *malaɛiib*/ trick. *ɛamalu fiyya malɛuub* they played a trick on me.
لعاب *luɛaab* /n/ saliva.
لعوب *laɛuub* /adj invar/ dissolute.
لعّيب *laɛɛiib* /n pl *laɛɛiiba*/ (skilled) player. *ya laɛɛiib* what a pro!

ملعب *malɛab* /n pl *malaaɛib*/ **1** area where a game is played, athletics field, pitch, (tennis) court etc. **2** playground. **3** playpen.
ملعبة *malɛaba* /n/ one played around with or played tricks on, plaything.
ملعب *mulɛab* /adj invar/ **1** socially attentive (of a man). **2** seductive (of a woman, usually with the accompanying connotation of being sexually amenable).
ألعوبة *ʔulɛuuba* /n pl *ʔalaɛiib*/ trick, stratagem.
ألعبان *ʔulɛubaan* /adj invar/ cunning and treacherous.
اتلعب *ʔitlaɛab* /vi/ to be played. *ʔil-liɛba di b-titliɛib bi-ɛaṣaaya mil-xaʃab* this game is played with a wooden stick. - iva *mitliɛib*.

لعّب *laɛɛab, laɛɛib* /vt/ to cause to play. *laɛɛab il-ɛayyil* have the child play! play with the child! ‖*laɛɛab ḥawagb-u* he wiggled his eyebrows. - vn *talɛiib*; ava/pva *milaɛɛab*.
لاعب *laaɛib*[2] /vt/ to play with, have a game with. *laaɛib il-ɛayyil* play with the child! *tilaɛib-ni kutfiina* will you have a game of cards with me? - vn *milaɛba*; ava/pva *milaaɛib*.
اتلاعب *ʔitlaaɛib* /vi/ **1** to play a match or the like with one another. **2**↑ to play around, play tricks. *huwwa-na malɛabt-ak titlaaɛib biyya* am I your plaything to do with as you like? *ʔit-talaaɛub fil-mizaniyya* monkeying with the budget. - vn *talaaɛub*↑; ava *mitlaaɛib, mutalaaɛib*↑.

ل ع ب ط
لعبط *laɛbaṭ* **1** /vt/ to distort, twist (out of shape). *ʔil-farraan laɛbaṭ il-ɛeef* the baker spoilt the shape of the (loaves of) bread. **2** /vi/ to twist or contort oneself. *ʔis-samak bi-ylaɛbaṭ fil-mayya* the fish weave about in the water. - vn *laɛbaṭa*; ava/pva *milaɛbaṭ*.
ملعبط *milaɛbaṭ* (also *fiṭiir milaɛbaṭ*) /coll n/ large pastry consisting of many layers of dough and clarified butter or cream, baked and eaten with cream, honey or cheese (more commonly called *miʃaltit*).
اتلعبط *ʔitlaɛbaṭ* /vi/ **1** to twist or contort oneself. *ʔir-raqqaaṣa tlaɛbaṭit zayy it-tiɛbaan* the dancer twisted herself like a snake. **2** to be twisted or contorted. - ava/iva *mitlaɛbàṭ*.

ل ع ب ك
لعبك *laɛbik* /vt/ to tangle. *ʔil-quṭṭa laɛbikit id-dubaara* the cat got the string in a tangle. - vn *laɛbaka*; ava/pva *milaɛbik*.
لعبكة *laɛbaka* /n pl *laɛabiik*/ tangle, confusion, mess. *ʔiʃ-ʃabaka kull-a-ha laɛabiik* the net is a mass of tangles. *ḥayat-ha kull-a-ha laɛabiik* her life is one big mess.
اتلعبك *ʔitlaɛbik* /vi/ to be or become tangled. - ava/iva *mitlaɛbik*.

ل ع د و د
لعدود *laɛduud* /n pl *laɛadiid*/ oaf, clod, simpleton.

ل ع ق
لعق *laɛaq (a)* /vt/ to lick. *qaaɛid yilɛaq fi-ṣawabɛ-u* he's licking away at his fingers. - vn *laɛq, laɛaqaan*; ava *laaɛiq*; pva *malɛuuq*.
لعوق *luɛuuq, liɛuuq* /n pl *-aat*/ electuary.
اتلعق *ʔitlaɛaq* /vi/ to be licked. - vn *mitliɛiq*.
لعّق *laɛɛaq* /vt/ to cause to lick. - vn *talɛiiq*; ava *milaɛɛaq*.
اتلعّق *ʔitlaɛɛaq* /vi/ passive of *laɛɛaq*. - iva *mitlaɛɛaq*.

[1] ل ع ل
لعلى *laɛli* /adj invar/ bright red.

[2] ل ع ل see [2] ع ل ل : *laɛalla*

ل ع ل ط
لعلط *laɛlaṭ* /vi/ to shimmer, gleam. *ʔin-niguum laɛlaṭit* the stars twinkled. *ʔil-ɛarabiyya bi-tlaɛlaṭ* the car is gleaming. *qumaaf milaɛlaṭ* scintillating material. - vn *laɛlaṭa*; ava *milaɛlaṭ*.
اتلعلط *ʔitlaɛlaṭ* = *laɛlaṭ*. - ava *mitlaɛlaṭ*.

ل ع ل ع
لعلع *laɛlaɛ* /vi/ **1a** to shine brightly. *ʔil-qamar bi-ylaɛlaɛ* the moon is shining brightly. *loon milaɛlaɛ* a

bright colour. **1b** to get into a radiant and sparkling mood, feel wonderful. *famma waḥda xallit-ni ʕalaʕlaʕ* one sniff and I was in heaven. **2a** to ring out, sound clear (of a voice). *ṣoot-u baqa ylaʕlaʕ fif-faqqa* his voice echoed round the flat. **2b** to have a splendid noisy time. *ʕamalna ḥafla kunna mlaʕlaʕiin ṣabbaaḥi* we had a party, making a huge din until morning. - vn *laʕlaʕa*; ava *milaʕlaʕ*.

ل ع ل ل see ² ل ع ل : *laʕalla*

ل ع ن

لعن *laʕan (a)* /vt/ to curse. *(ʔallaah) yilʕan ʔabuu-k* (may God) curse your father! *laʕant is-saaʕa lli twalad fiiha* I cursed the day he was born! ‖ *yilʕan diin ʔumm-ak* (may your mother's religion be damned!) ≈ damn you! - also *naʕal*. - vn *laʕn*; ava *laaʕin*; pva *malʕuun*.

لعنة *laʕna* /inst n, pl *-aat*/ a curse. *ʕalee laʕnit allaah* may God's curse be upon him. ‖ *da raagil laʕna* the man's a plague!

ملعون *malʕuun* /adj pl *malaʕiin*/ **1** cursed, damned, wretched. **2** crafty and treacherous. See further under م ل ع ن

ألعن *ʔalʕan* /el/ more/most wicked or abominable. *ʔinta ʔalʕan mi-lli b-yisraq* you're worse than one who steals. *ʔalʕan mayya hiyya btaaʕit iṭ-ṭurʃi* the worst kind of liquid is that from pickles.

لعين *laʕiin*↑ /adj pl *luʕana*/ accursed.

اتلعن *ʔitlaʕan* /vi/ to be cursed. - iva *mitliʕin*.

التعن *ʔiltaʕan* = *ʔitlaʕan*.

ل ع و ق

لعوق *laʕwaq* /vi/ to toady, indulge in obsequious flattery. - vn *laʕwaqa*; ava *mtlaʕwaq*.

اتلعوق *ʔitlaʕwaq* = *laʕwaq*. - ava *mitlaʕwaq*.

ل غ see ل غ و : *luɣa*

ل غ د

لغد *luɣd* /n pl *liɣaad, luɣuud, luɣúda*/ double chin.

لغّد *laɣɣad* /vi/ to develop a double chin. - vn *talɣiid*; ava *milaɣɣad*.

ل غ ز

لغز *luɣz* /n pl *ʔalɣaaz*/ **1** (verbal or manual) puzzle (to be solved for fun). *kitaab ʔalɣaaz* a puzzle book. **2** enigma, mystery.

ل غ ط

لغط *laɣaṭ* /n/ **1** *[path]* (heart) murmur. **2** hum of conversation. ‖ *fii laɣaṭ kitiir fil-mawḍuuʕ da* there is a lot of gossip about this subject.

ل غ غ

لغ *laɣɣ (u)* /vi/ **1** to lap with the tongue. **2** to eat and drink in a greedy and disgusting fashion. ‖ *baṭṭal il-laɣɣ illi bi-tluɣɣ-u da* ≈ stop eating so piggishly! - vn *laɣɣ*; ava *laaɣig*.

لغّغ *laɣɣaɣ* /vt/ *[rur]* to force-feed. - vn *talɣiiɣ*; ava/pva *milaɣɣaɣ*.

اتلغّغ *ʔitlaɣɣaɣ* /vi/ to be force-fed. - iva *mitlaɣɣaɣ*.

ل غ ل غ

لغلغ *laɣlaɣ* /vt/ to force-feed. - vn *laɣlaɣa*; ava/pva *milaɣlaɣ*.

لغلوغ *laɣluuɣ* /n pl *laɣaliiɣ*/ root (usually of the tongue).

لغلوغة *laɣluuɣa* = *laɣluuɣ*.

اتلغلغ *ʔitlaɣlaɣ* /vi/ to be force-fed. - iva *mitlaɣlaɣ*.

ل غ م

لغم *laɣm, luɣm, laɣam* <T *lağım*> /n pl *ʔalɣaam*/ (explosive) mine.

لغّم *laɣɣam* /vt/ to mine, plant mines in. ‖ *ʔil-ḥitta mlaɣɣama buliis* the place is stiff with police. - *geeb-u mlaɣɣam* he's loaded (with money). - vn *talɣiim*; ava/pva *milaɣɣam*.

اتلغّم *ʔitlaɣɣam* /vi/ to be mined, be planted with mines. - iva *mitlaɣɣam*.

ل غ م ص see ل غ م ط : *laɣmaṣ, ʔitlaɣmaṣ*

ل غ م ط

لغمط *laɣmaṭ* (also *laɣmaṣ*) /vt/ to smear, soil. *ʔidee milaɣmaṭa fukulaata* his hands are smeared with chocolate. - vn *laɣmaṭa*; ava/pva *milaɣmaṭ*.

اتلغمط *ʔitlaɣmaṭ* (also *ʔitlaɣmaṣ*) /vi/ to be smeared, be soiled. - iva *mitlaɣmaṭ*.

ل غ و

لغة *luɣa* /n pl *-aat*/ **1** language. *ʔil-luɣa l-ʔingiliziyya* the English language. **2** speech, manner of speaking. *luɣit iṣ-ṣiʕiid* the speech of Upper Egypt.

لغوة *laɣwa*↓ /n pl *-aat*/ language, speech.

لغوى *luɣawi, laɣawi*↓ **1** /adj/ linguistic. *ʔil-magmaʕ il-luɣawi* the Arabic Language Academy of Egypt. **2** /n */ linguist.

لاغى *laaɣa* /vt/ **1** to make conversational overtures to, approach in a pleasant and friendly way. *ḥaaga gazabit-ni lii fa-btadeet ʕalaɣii* something attracted me

to him, so I started to draw him into conversation. *laavi l-ɛaskari b-sigaara* give the policeman a cigarette to break the ice. **2** *[magic]* to converse with (spirits, in their own tongue). - vn *milaʏiyya*; ava *milaavi*.
اتلاغى ʔitlaaʏa /vi/ passive of *laaʏa*. - iva *mitlaaʏi*.

ل غ و ص
لغوص *laʏwaṣ* **1** /vt/ to smear, soil. *laʏwaṣt*^{i} *ɡamiiṣ-i zeet* I got my shirt smeared with oil. **2** /vi/ to act messily. *ʔil-ɛayyil laʏwaṣ fil-ʔakl* the child made a mess with his food. ‖*laʏwaṣna fil-mawḍuuɛ* we became embroiled in the matter. - vn *laʏwaṣa*; ava/pva *milaʏwaṣ*.
لغوصة *laʏwaṣa* /n pl *laʏawiiṣ*/ mess. *dool ʃiwayyit laʏawiiṣ fayḍiin min il-ʔakl* they're (just) some messy bits of left-over food.
اتلغوص ʔitlaʏwaṣ /vi/ to be or become smeared, become soiled. - ava/iva *mitlaʏwaṣ*.

ل غ ى
لغى *laʏa (i)* /vt/ to make void, annul. *laʏeet l-ittifaaq leeh* why did you cancel the agreement? *ʔis-sawra lamma gat laʏit il-ʔaḥzaab kull-a-ha* when the revolution came it abolished all political parties. - vn *laʏy, laʏayaan*; ava *laaʏi*; pva *malʏi*.
لاغى *laaʏi* /adj */ annulled.
اتلغى ʔitlaʏa /vi/ to be made void, be annulled. *bi-ṣuduur il-qanuun it-taani ʔitlaʏa l-ʔawwalaani* with the promulgation of the second law, the first became void. - iva *mitliʏi*.
ألغى ʔalʏaˀ = *laʏa*. - vn *ʔilʏa*; ava *mulʏi, milʏi*.

ل ف ت [1]
لفت *lafat (i)* /vt/ **1** to turn, redirect. *ʔilfit raas-ak in-naḥya t-tanya* turn your head the other way. **2** to draw (attention). *ɡaayiz yiḥiss innu b-yilfit naẓar ʔaṣḥaab-u* he wants to feel that he attracts the attention of his friends. *lafat naẓar-i lil-muʃkila* he directed my attention to the problem. ‖*laft*^{i} *naẓar [admin]* warning that further negligence will be subject to disciplinary action. - vn *laft, lafataan*; ava *laafit*; pva *malfuut*.
لفتة *lafta*^{1} /n pl *-aat*/ **1** instance noun of *laft*. **2** gesture. *di tibqa lafta kwayyisa nnina nzuur-u fil-mustaffa* it would be a nice gesture for us to visit him in hospital.
لافتة *lafta*^{2}ˀ /n pl *-aat*/ notice, sign. - also *yafta*.
تلفيتة *talfiita* /n pl *-aat*/ glance aside. *ma-fii-ʃ talfiita b-abuṣṣ*^{i} *ma-laqet-ʃ iʃ-ʃanṭa* I just looked away for a second and the bag was gone. *hiyya talfiita kaan in-nahaar xiliṣ* before you could say Jack Robinson the day was over.

اتلفّت ʔitlaffit /vi/ to look from side to side. *wi-nta bi-tsuuq ma-titlaffit-ʃ* don't keep looking about when you drive! ‖*ḥ-axallii yimʃi yitlaffit waraa* I'll put him in fear for his life! - ava *mitlaffit*.
التفت ʔiltafat /vi/ **1** to turn one's face and look. **2** to give one's attention. *ʔiltifit li-ʃuʏl-ak* pay attention to your work! - vn *ʔiltifaat*; ava *miltifit*.
استلفت ʔistalfat, ʔistalfit /vt/ to attract (the attention, the gaze). *ʔistalfat naẓar-i w-ʔana maaʃi manẓar il-baḥr* the view of the sea caught my eye as I was walking. ‖*ḥaaga ma-tistalfit-ʃ in-naẓar* a trivial thing. - vn *ʔistilfaat*; ava *mistalfit, mustalfit*.

ل ف ت [2]
لفت *lift*^{1} /coll n/ turnip(s).
لفتة *lifta* /unit n, pl *-aat*/ a turnip.
لفتاية *liftaaya* = *lifta*.

ل ف ت [3]
لفت *lift*^{2} <Engl> /n/ **1** hydraulic car lift. **2a** lift, elevator. **2b** dumb waiter, service lift.

ل ف ح
لفح *lafaḥ (a)* /vt/ **1** to catch (of wind etc.). *ʔil-hawa lafaḥ-u* a gust of wind caught him. **2** to catch and affect the colour of (of sunshine, fire etc.). *ʔiʃ-ʃams*^{i} *lafaḥit wiʃʃ-i* my face caught a touch of sun. - vn *lafḥ*; ava *laafiḥ*; pva *malfuuḥ*.
لفحة *lafḥa* /inst n, pl *-aat*/ a sudden touch. *lafḥit hawa* a gust of wind. *gat-li lafḥit bard* I got a touch of cold.
تلفيحة *talfiiḥa* /n pl *-aat, talafiif*/ narrow woollen scarf worn by men (see Pl.F, 2).- also *tarfiiḥa, talfiiɛa*.
اتلفح ʔitlafaḥ /vi/ passive of *lafaḥ*. - iva *mitlifiḥ*.
اتلفّح ʔitlaffaḥ /vi/ to don a *talfiiḥa*. - ava *mitlaffaḥ*.

ل ف ظ
لفظ *lafaẓ (u)* /vt/ **1** to reject, dismiss. **2** to utter. - vn *lafẓ*; ava *laafiẓ*; pva *malfuuẓ*.
لفظ *lafẓ* /n pl *ʔalfaaẓ*/ (spoken) expression, utterance.
ملافظ *malaafiẓ* /pl n/ language, (spoken) vocabulary. *ʔil-walad da malafẓ-u wiḥʃa* that boy has a nasty turn of phrase. *ḥassin malafẓ-ak* don't be rude!
اتلفظ ʔitlafaẓ /vi/ to be rejected, dismissed. - iva *mitlifiẓ*.
اتلفّظ ʔitlaffaẓ /vi/ to give utterance. *ma-tlaffaẓ-ʃ*^{i} *b-ḥarf* he didn't utter a word. - ava *mitlaffaẓ*.

ل ف ع
لفع *lafaɛ (a)* /vi/ to cast (upon one's shoulder). *lafaɛt*^{i} *mlayt-i (ɡala kitf-i)* I threw my wrap over my shoulder.

- vn *lafɛ, lafaɛaan*; ava *laafiɛ*; pva *malfuuɛ*.

اتلفع ʔitlafaɛ /vi/ to be cast (upon the shoulder). - iva *mitlifiɛ*.

لفّع *laffaɛ* /vt/ to wrap (s.o., particularly about the head and shoulders). *ʔis-sitt[i] laffaɛit ibn-a-ha bit-talfiiɛa* the woman wrapped her son around with the scarf. - vn *talfiiɛ*; ava/pva *milaffaɛ*.

تلفيعة *talfiiɛa* /n pl *-aat, talafiiɛ*/ narrow woollen scarf worn by men (see Pl.F, 2). - also *tarfiiḥa, talfiiḥa*.

اتلفّع ʔitlaffaɛ /vi/ to be wrapped or wrap oneself (particularly about the head and shoulders). ‖*mitlaffaɛ bi-lsaan-u* insolent. - ava/iva *mitlaffaɛ*.

استلفّع ʔistilaffaɛ[↓] /vi/ to put on a *talfiiɛa*. - ava *mistilaffaɛ*.

ل ف ف

لفّ *laff[↓]* *(i)* /vt/ **1a** to wrap, envelop. *liff[i]-haa-li f-waraq* wrap it in paper for me. *liff-i-lna sgaara* roll us a cigarette. **1b** to wind, twist, coil. *laffit il-xuṣla ɛar-rulooh* she wound the lock of hair round the curler. *laffu l-ɋalɛ* they furled the sail. **2** to cause to turn. *liff ik-kursi naḥyit-i* turn the chair towards me. *ḥuṭṭi d-diɋiiɋ fil-mayya w-liffii* put the flour in the water and stir it around. *ɋaɛadit tiliff il-mavzal* she kept on twirling the spindle. ‖*laff[i] dmav-* to get a hold over, influence, as in *laff[i] dmav-ha b-kilmiteen ḥilwiin* he took her in with a few sweet words, *ʔil-bint[i] laffit dimaav-u* the girl turned his head. **3a** to move in a circle around, make a circuit of. *ʔil-ʔutubiis laff il-midaan* the bus went round the square. *ʔiz-zaffa laffit il-balad* the procession made a circuit of the village. **3b** to go around, go about. *laffeet il-ḥawaari* I walked about the alleyways. *laffeena ʔurubba kull-a-ha* we travelled all over Europe. **4** to round off, make rounded. *ʔin-naggaar laff il-ʔaṭraaf* the carpenter rounded off the edges. *zarradiyya b-buuz malfuuf* round-nosed pliers. — /vi/ **5a** to turn, make a turn. *liff[i] ʃmaal ɛand ik-kubri* turn left at the bridge. *ʔil-maṣaaṭib laffa daaxil il-ḥagz* the benches run round the walls of the detention cell. *ɋarn[i] laafif* a curly horn. ‖*laff[i] maɛa r-riiḥ [naut]* to wear. **5b** to twist, warp. *ʔil-xaʃab in-naaʃif ma-yliff[i]-ʃ* dry wood doesn't warp. **5c** to rotate, revolve. *ɛaɋaarib is-saaɛa bi-tliff[i] ymiin* the hands of the clock rotate clockwise. *ʔil-ɛagala bi-tliff[a] ɛal-faaḍi* the wheel revolves freely. ‖*ʔid-dinya bi-tliff [prov]* (1) things are always changing. (2) it's a small world. **6** to go around, go about. *laffeet waraa fiʃ-ʃawaariɛ* I followed him about through the streets. *b-aliff[i] maɛaahum kitiir* I go about with them a lot. ‖*laff[i] w-daar* to knock around, gain experience here and there, as in *ʔil-waad da laff[i] w-daar* that kid's been around. **7** to be devious, be wily. *ma-tliff[i]-ʃ maɛaaya* don't play games with me! - vn *laff, lafafaan*; ava *laafif*; pva *malfuuf*.

¶ *laff[a] ɛala* to take in, dupe.

لفّ *laff[2]* /vn/ ‖*fiṭiir laff* rich pastry made with cream eaten with cheese or honey. - *ʔil-laff[i] wid-dawaraan* (1) beating about the bush. (2) deviousness. - *waraɋ laff* wrapping paper.

لفّة *laffa* /n/ **1** /pl *-aat*/ instance noun of *laff[2]*. *ʔusṭuwanaat xamsa w-ʔarbiɛiin laffa* 45 r.p.m. gramophone records. *waaxid il-ɛagala laffa* taking the bike for a spin. *laffa ntixabiyya* election campaign tour. — /pl *lifaf*/ **2** parcel, package..**3** roll. *laffit waraɋ tuwalitt* a roll of lavatory paper. **4** strip of cloth worn wound about the head. **5a** swaddling cloth. **5b** nappy, diaper.

ملفوف *malfuuf* /adj/ cylindrical.

لفافة *lifaafa* /n pl *lafaayif*/ *[Chr]* napkin held over the mouth by a communicant to prevent any of the host falling to the ground.

لفّاف *laffaaf* /n pl *laffaafa, laffafiin*/ **1** person engaged in rolling, coiling etc. **2** loafer.

ملفّ *milaff, malaff* /n pl *-aat*/ **1** folder, file; dossier. *milaff il-xidma* employment record. *milaff il-ɋaḍiyya* case file. **2** *[text]* tuft of cotton. **3** *[elec]* coil. **4** bow-drill. **5** curve, bend (in a road). *xad il-malaff[i] gaamid* he took the bend sharply.

اتلفّ ʔitlaff /vi/ **1** to be wrapped, be enveloped. ‖*ʔiid-ak titlaff[i] f-ḥariir* your hand deserves to be wrapped in silk! (to a craftsman in appreciation of his skill). **2** to be wound, be twisted, be coiled. **3** to be turned, be turned round. **4** to be rounded, be rounded off. - iva *mitlaff*.

لفّف *laffif* /vt/ **1** to wind or twist or coil repeatedly. **2** to turn repeatedly. **3** to round off repeatedly. **4** to take around. *ɫaffif-ni maṣr* he took me round Cairo. - vn *talfiif*; ava/pva *milaffif*.

تلافيف *ɫalafiif: ʔumm it-talafiif [zool]* omasum, many-plies. - also *ʔumm if-ʃalatiit, ʔumm il-lafaliif*.

اتلفّف ʔitlaffif /vi/ passive of *laffif*. - iva *mitlaffif*.

ل ف ق

لفق *lafaq (u)* /vt/ to baste, tack, sew with temporary stitches. - vn *lafɋ, lafaɋaan*; ava *laafiɋ*; pva *malfuuɋ*.

لفّق *laffaɋ* /vt/ to concoct, fabricate. *laffaɋit-lu ɋaḍiyya* she concocted a case against him, she framed him. - vn *talfiiɋ*; ava/pva *milaffaɋ*.

تلفيقة *talfiiɋa* /inst n, pl *talafiiɋ*/ a fabrication.

اتلفّق ʔitlaffaɋ /vi/ to be fabricated, be concocted. - iva *mitlaffaɋ*.

ل ف ل ف

لفلف *laflif* /vt/ to wrap up. *laflif nafs-u min il-bard* he wrapped himself up against the cold. -vn *laflafa*; ava/pva *milaflaf*.

لفليفة *lufleefa* /n pl *-aat, lafaliif*/ **1** wrap. **2** crease. ‖ *ʕumm il-lafaliif [zool]* omasum, manyplies.

اتلفلف *ʔitlaflif* /vi/ to be wrapped up. -iva *mitlaflif*.

ل ف م ا ن

لافومانو *lavumaanu* <It *lavamano*> /n pl *lavumanaat/ [plumb]* basin, sink.

ل ف ي ه

لفيه *lifeeh* <Fr *levée*> /n pl *-aat*/ (small) support used in work with sheet metal.

ل ق ب

لقب *laqab, laqabᵗ* (also *naqbᵈ*) /n pl *ʔalqaab*/ **1** title, honorific. **2** family name.

ل ق ح ¹

لاقح *laaqiḥ* /adj */ penniless, broke, scrounging.

لقّح *laqqaḥ ¹* /vt/ to dump, throw down or out in a casual or dismissive way. *laqqaḥ il-baltu ʕak-kursi* he tossed his coat down on the chair. *bi-yiigi fil-yoom nobteen talaata ylaqqaḥ il-biḍaaʕa* he comes two or three times a day to dump off the goods. *ʕarabiyyit-ak qidmit qawi - laqqaḥ-ha baqa* your car's completely passed it - why don't you dump it? ‖ *laqqaḥ ʕala-... bi-kalaam* to throw out insulting comments about (s.o.). - *laqqaḥ gittit-u ʕala-* to impose one's presence on (s.o.), as in *kull ʲ yoom bi-yiigu ylaqqaḥu gittit-hum ʕaleena* every day they come hanging around us when they're not wanted. - vn *talqiiḥ*; ava/pva *milaqqaḥ*.

تلقيحة *talqiiḥa* /n/ **1** /pl *talaqiiḥ*/ one who imposes himself on others, burdensome boor. **2** /inst n, pl *-aat*/ a dumping.

اتلقّح *ʔitlaqqaḥ ¹* /vi/ to be dumped or dump oneself. *ʔiṭ-ṭuub da baqaa-lu ʃahr ʲ mitlaqqaḥ ʕar-raṣiif* those bricks have been sitting there on the pavement for a month. *ʔinta mitlaqqaḥ gambi kida leeh* why have you parked yourself next to me like that? -ava/iva *mitlaqqaḥ*.

استلقح *ʔistalqaḥ* /vi/ to impose oneself (on others). - vn *ʔistilqaaḥ*; ava *mistalqaḥ*.

استلقّح *ʔistilaqqaḥ* /vi/ *[abus]* = *ʔitlaqqaḥ*. -ava *mistilaqqaḥ*.

ل ق ح ²

لقاح *liqaaḥ, liqaaḥ* /n/ **1** pollen. **2** vaccine.

لقّح *laqqaḥ ²*, *laqqaḥ* /vt/ **1** to fertilize, fecundate, pollinate. *talqiiḥ ṣinaaʕi* artificial insemination. **2** to inoculate. - vn *talqiiḥ*; ava/pva *milaqqaḥ*.

اتلقّح *ʔitlaqqaḥ ²* /vi/ passive of *laqqaḥ ²*. -iva *mitlaqqaḥ*.

ل ق د see ق د : *laqad*

ل ق ص ر see ق ص ر ³ : *l-uqṣur*

ل ق ط

لقط *laqaṭ (u, i)* /vt/ **1** to gather, collect. *bi-tulquṭ quṭn* she picks cotton. ‖ *laqaṭ nafas-u* he caught his breath. - *ʔil-liḥaam bil-ʔuksijiin yulquṭ naẓar-i* oxygen welding blinds me. **2a** to pick up, catch onto. *bi-yulquṭ kull ʲ ɣalṭa* he catches every mistake. *ʔil-maɣnaṭiis bi-yulquṭ masamiir* the magnet picks up nails. *mikrufoon ḥassaas bi-yulquṭ dabbit in-namla* a sensitive microphone that picks up the footsteps of an ant (i.e. the slightest sound). ‖ *laqaṭ il-fuula* to see the catch, catch on. - *ʕaaʕid lis-saʕṭa wil-laʕṭa* waiting for anything that may come one's way. **2b** to pick up (a stitch, in knitting). **3a** to take, accept (dye etc.). *bi-yulquṭ is-sabɣa kwayyis* it takes the dye well. **3b** to become impregnated with (a taste or smell). *ʔif-faay laaqiṭ ʕaaz* the tea smells of paraffin. **4** *[needlew]* to stitch, sew (by hand). *ʔulquṭi d-deel makaan ma tfakk* stitch up the hem where it has come undone. **5** *[phot]* to take an exposure of, snap. ‖ *muftaaḥ il-laqṭ* shutter release (of a camera). - vn *laqṭ, laqaṭaan*; ava *laaqiṭ*; pva *malquuṭ*.

لقطة *laqṭa* /n pl *-aat*/ **1** instance noun of *laqṭ*. **2** *[phot]* exposure, snap. **3** *[cin]* take.

لقطة *luqṭa* /n/ bargain, rare find, lucky find. *ʔil-ʕariis da luqṭa* that bridegroom is a good catch.

لقيط *laqiiṭ* /n pl *luqaṭa*/ foundling.

لقيط *liqiiṭ* /n/ *[agric]* **1** cotton pickings. **2** seed dropped into the furrow behind the plough.

ملقط *malqaṭ* /n pl *malaaqiṭ*/ tweezers. ‖ *(fi-)ṣalqaṭ (fi-) malqaṭ* see *ṣalqaṭ*.

ملقاط *mulqaaṭ* /n pl *malaqiiṭ*/ **1** tweezers. **2** *[slang]* pickpocket.

لقّط *laqqaṭ* /vt/ **1** to pick up one by one. *ʔil-firaax bi-tlaqqaṭ il-qamḥ* the chickens peck up the grain. **2** to make final improvements on, smarten up. *baʕd ⁱ ma nistaʕdil iṣ-ṣaag nilaqqaṭ-u* after straightening the sheet metal we go over it and remove any remaining irregularities. **3** *[agric]* to sow (seeds) by dropping them one by one into the furrow behind the plough. - vn *talqiiṭ*; ava/pva *milaqqaṭ*.

تلقيطة *talqiiṭa* /n pl *-aat*/ defect, fault (on a surface, in material etc.).
اتلقّط *ʔitlaqqaṭ* /vi/ passive of *laqqaṭ*. - iva *mitlaqqaṭ*.
استلقط *ʔistalqaṭ* /vi/ to look for haphazardly or without any special plan. *ʔastalqaṭ-li ʔayyʲ ʃuɤla mwaqqata* I'm going to look for any temporary job that may come my way. *ʔistalqaṭ-lak ʔayyʲ ɦaaga mit-tallaaga taṣbiira* take anything you happen to find in the refrigerator as a snack. - vn *ʔistilqaaṭ*; ava *mistalqaṭ*.

ل ق ف
لقف *laqaf (u)* **1** /vt/ to catch, catch hold of. *ʔil-goon laqaf ik-koora* the goalkeeper caught the ball. **2** /vi/ to be laboured (of breathing, heartbeats). *nafas-u b-yulquf* his breathing is laboured. - vn *laqf, laqafaan*; ava *laaqif*; pva *malquuf*.
لقفة *laqfa* /pl *-aat*/ instance noun of *laqf*. *laqfa ɦilwa* a good catch.
لقّافة *laqqaafa* /n pl *-aat*/ water-wheel scoop.
لقّيف *laqqiif* /n pl *laqqiifa*/ catcher (e.g., in an acrobatic performance).
ملقف *malqaf* /n pl *malaaqiif*/ **1** device built on a roof for catching the breeze and conducting it to the rooms below (specifically, in old houses, a large wooden shed with a sloping roof open to the north). **2** *malqaf hawa* draught of air. *ʔiwɛa tuqaf fi-malqaf hawa wi-nta ɛarqaan* don't stand in a draught when you're sweating!
اتلقف *ʔitlaqaf* /vi/ to be caught. - iva *mitliqif*.
اتلقّف *ʔitlaqqaf* /vt/ to snatch up, swipe quickly. - ava/pva *mitlaqqaf*.
استلقف *ʔistalqaf* /vt/ to catch (s.th. thrown). - vn *ʔistilqaaf*; ava/pva *mistalqaf*.
¶ *ʔistalqaf ɛala* to long for. *ʔil-waaɦid bi-yistalqaf ɛala gawaab yiigi minnu* I am dying to get a letter from him.
استلقّف *ʔistilaqqaf* = *ʔistalqaf*. - ava *mistilaqqif*.
¶ *ʔistilaqqaf ɛala* = *ʔistalqaf ɛala*.

ل ق ق
لقّ *laqq (u)* **1** /vt/ to rattle (s.th.). **2** /vi/ to make a rattling sound. ‖*beeḍa bi-tluqq* an egg whose albumen can be felt to move when the egg is shaken (i.e., a bad egg). - *laqqʲ b-kalaam* (1) to talk a lot of claptrap, run on nonsensically. (2) to speak spitefully. - vn *laqq, laqaqaan*; ava *laaqiq*; pva *malquuq*.
لقّاق *laqqaaq* /adj */ over-talkative.
اتلقّ *ʔitlaqq* /vi/ to be rattled. - iva *mitlaqq*.

ل ق ق ا ن
لقّان *laqqaan* (also *ṣalaat il-laqqaan*) /n/ *[Chr]* ceremony of the washing of the feet.

لقّانة *laqqaana* /n pl *-aat*/ earthenware tub for kneading dough, similar to a *maguur* (see Pl.A, 8), but smaller.

ل ق ل ق
لقلق *laqlaq* **1** /vt/ to make unsteady or unstable, cause to wobble. *laqlaq il-musmaar fiwayya* ease the nail sideways a little. **2** /vi/ to be hesitant (in speech). *laqlaq fik-kalaam* to intersperse one's talk with endless ums and ers. - vn *laqlaqa*; ava/pva *milaqlaq*.
ملقلق *milaqlaq* /adj */ indecisive.
لقلاق *liqlaaq* /n/ tell-tale, tale-bearer.
اتلقلق *ʔitlaqlaq* /vi/ **1** to be made unsteady or unstable. **2** to wobble. - ava/iva *mitlaqlaq*.

ل ق م
لقم *laqam (u)* /vt/ to take a bite of. *ɛammaal yilqum is-sandawiʃ* he's biting away at the sandwich. *ʔil-kalbʲ laqam rigl-i* the dog took a bite out of my leg. - vn *laqm, laqamaan*; ava *laaqim*; pva *malquum*.
لقمة *laqma* /inst n, pl *-aat*/ a bite.
لقمة *luqma* /n pl *-aat, luqam*/ **1** morsel, mouthful (especially of bread). *luqma b-gibna* a bit of bread and cheese. *ma-ʃii-ʃ fil-beet wala luqmit ɛeeʃ* there's not even a scrap of bread in the house. *ɦaḍḍaru luqma* they prepared a bite to eat. ‖*luqmit il-qaaḍi* a confection consisting of balls of deep-fried batter dipped in honey, syrup or cream. - *huwwa zayy il-luqma fiz-zoor* he sticks in one's craw. - *ʔil-luqma l-haniyya tkaffi miyya [prov]* ≈ a meal in pleasant company goes a long way. **2** basic sustenance, keep. *ʔil-fuqara b-yinfiɤlu bil-garyʲ wara luqmit-hum* the poor are busy trying to keep body and soul together. *laazim tiftaɤali b-luqmit-ik* you must earn your keep. **3** *[mech]* **3a** jaw of a chuck. **3b** leaf of a leaf spring. **3c** wheel chock. **3d** (loosely) any small flat piece of metal. **4** *[mus]* short reed acting as the mouthpiece of an *ʔarɤuul*. **5** motif in tent appliqué designs (see Pl.H, 21).
لقّم *laqqam* /vt/ **1** to feed in small quantities, feed bit by bit. *talqiim il-ʔaṭfaal* spoon-feeding of children. ‖*laqqamt-u gneeh* I slipped him a pound. **2** to feed, charge. *laqqamtʲ ik-kanaka bunn* I put the proper amount of coffee into the cannikin. *laqqam il-bunduqiyya* he loaded the rifle. ‖*talqiim iz-zarɛ* placing fertilizer under plants in handfuls. - vn *talqiim*; ava/pva *milaqqam*.
تلقيمة *talqiima* /n pl *-aat, talaqiim*/ a sufficient quantity for one feeding, loading or charging. *ɛandina talqiimit bunnʲ waɦda bass* we only have enough coffee for one pot.
اتلقّم *ʔitlaqqam* /vi/ passive of *laqqam*. - iva *mitlaqqam*.

ل ق ن [1]

لقّن *laqqan* /vt/ **1** to prompt. *lamma kunt[i] b-atkallim fit-tilifoon laqqanuu-ni k-kalaam* when I was speaking on the phone they told me what I ought to say. *bi-ylaqqin il-mumassiliin lamma yinsu k-kalaam* he prompts the actors when they forget their lines. **2** *[Isl]* to instruct (a deceased person at his grave) how to reply to anticipated questions by the two angels charged with questioning the dead. **3** *[mil]* to brief. - vn *talqiin*; ava/pva *milaqqan*.

ملقّن *mulaqqin* /n */ prompter.

اتلقّن *ʔitlaqqan* /vt/ passive of *laqqan*. *huwwa tlaqqan ir-radd[i] qabl[i] ma yitsiʔil* he was given the answer before the question was asked. - iva *mitlaqqin*.

ل ق ن [2] see ل ق ق ا ن: *laqqaan, laqqaana*

ل ق و

لقوة *laqwa* /n/ tetanus (as a disease of cattle).

ل ق ى [1]

لقى *laqa[1], liqi (a)* /vt/ **1** to find, come upon. *laqeet ik-kitaab iḍ-ḍaayiʕ* I found the book that was lost. ‖*laqa yaakul* (usually in negative contexts) to make enough money to keep alive, as in *hiyya miʃ laqya taakul* she's hardly managing to make a living, *huwwa-ḥna laqyiin naakul ʕafaan niruuḥ ʔiskindiriyya* we're hardly managing to get by, let alone go off to Alexandria! **2** to realize, perceive. *laqeet in-naas bi-tbuṣṣ-i-li* I realized that people were looking at me. *laqu l-ʔutubiis miʃ raayiḥ il-ḥitta lli humma rayḥin-ha* they found that the bus wasn't going where they were going. — *tilqaa* **3** modal of probability. *tilqaa-ku ma-kaltuu-ʃ* you probably haven't eaten yet, I don't suppose you've eaten yet. *tilqaa ma-gaa-ʃ ʕalaʃaan ʕayyaan* he probably hasn't come because he's ill. - vn *laqayaan*; ava *laaqi*; pva *malqi*.

لقا *luqa* /n/ meeting, encounter. *luqaa-na maʕa baʕḍ* our meeting with one another.

لقاء *liqaaʔ↑* /n pl *-aat*/ encounter, meeting. *ʔila l-liqaaʔ* until we meet again, *au revoir*.

تلقائى *tilqaaʔi↑* /adj/ spontaneous.

¶ *tilqaʔiyyan* /adv/ spontaneously.

اتلقّى *ʔitlaqqa* = *ʔistilaqqa*. - ava *mitlaqqi*.

لاقى *laaqa* /vt/ **1** to discover, perceive. *ʔadawwar ʕala mraat-i ʔalaqii-ha xaragit* I look for my wife and find that she has gone out. *tilaqii ʔaṣlaʕ* you'll find him bald. **2** to meet. *ḫ-alaqii-k feen* where shall I meet you? ‖*laqii-ni wala tʏaddii-ni* ≈ a warm welcome is worth more than a meal. - *waaḥid yiḍrab wit-taani ylaaqi* one is tough and the other is kind. — *tilaaqi* **3** modal of probability. *tilaaqii-k ma-kunt[i]-ʃ ʕaawiz tiigi* you probably just didn't want to come. *tilaqii qaaʕid ʕandu fil-beet* he's probably at home now. *tilaaqi ʔinn[i] fii ʕandu mafaakil kitiira* he probably has a lot of problems. - vn *milaqiyya*; ava *milaaqi*.

¶ *yilaqii-ha min ... walla min ...* ≈ to be beset by troubles. *ʔalaqii-ha mineen walla mineen* I am plagued by difficulties.

اتلاقى *ʔitlaaqa* /vi/ **1** to be found. *ʔitlaaqit taḥt[i] koom kutub* it was found under a pile of books. **2** to meet one another. *ḫa-nitlaaqa ʕan-naṣya* we'll meet on the corner. - ava/iva *mitlaaqi*.

ألقى *ʔalqaʔ↑* /vt/ **1** to recite, make or deliver (a speech, recitation etc.). *ʔalqa qaṣiida gamiila min ʔalf[i] leela w-leela* he recited a lovely poem from The Thousand and One Nights. *nooʕ min il-ɤuna been il-ɤuna wil-ʔilqaaʔ* a kind of singing which is between singing and recitation. **2** to throw down, drop. *ʔil-qanaabil illi ḫa-yilqii-ha l-ʕadiww* the bombs which the enemy will drop. - vn *ʔilqaaʔ*; ava *mulqi*; pva *mulqa*.

التقى *ʔiltaqa* /vt/ **1** to find, perceive. *ʔiltaqa nafs-u ntaqal min ig-ganna li-gihannam* he found himself transported from Heaven to Hell. **2** to encounter, come across. *ʔiltaqeet-u fiʃ-faariʕ w-ana maafi* I found it in the street as I was going along. *dawwar iz-ziir ʕala ɤaṭaa lamma ltaqaa [prov]* (the water-jar looked for its lid until it found it) ≈ every Jack has his Jill. — /vi/ **3** to meet together, get together. *ḫa-niltiqi ʔimta* when shall we get together? - ava *miltiqi*.

استلقى *ʔistalqa: ʔistalqa waʕd-ak* receive your due! you're in for it now!

استلقّى *ʔistilaqqa* /vt/ to receive. *bi-yistalaqqa t-taʕlimaat mil-ʕumda* he gets his instructions from the mayor. *ʔistilaqquu-ni bif-fitiima* they received me with insults. ‖*ruuḥ istilaqqa waʕd-ak* (go and meet your fate!) go if you must, but don't say you haven't been warned! - *wiqiʕt[i] mis-sama wi-nta stilaqqet-ni* (I fell from the sky and you caught me) I was in desperate straits and you helped me. - ava *mistalaqqi, mistalaqqa*.

ل ق ى [2]

لقى *laqa[2] (i)* /vt/ *[text]* to string (a warp thread on a loom). - vn *laqy*; ava *laaqi*; pva *malqi*.

لقّى *laqqa* /vt/ *[text]* to string (warp threads on a loom). - vn *talqiyya*; ava/pva *milaqqi*.

ملقّى *milaqqi* /n */ *[text]* draw-frame operator.

ل ك ر

لاكر *lakar* <Engl> /n/ lacquer (coating on a gramophone record).

ل ك ز

لكز *lakaz (u, i)* /vt/ to hit, poke, dig (especially with the elbow). *kull[i] ʃwayya yilkuz ʕaxuu b-ʔiid-u f-gamb-u* he keeps digging his brother in the side with his arm. - vn *lakz, lakazaan*; ava *laakiz*; pva *malkuuz*.

لكزة *lakza* /inst n, pl *-aat*/ a hit, a poke, a dig (especially with the elbow).

اتلكز *ʔitlakaz* /vi/ to be hit, poked or dug (especially with the elbow). - iva *mitlikiz*.

ل ك س

لوكس *luks* <Fr *luxe*> /adj invar/ de luxe. *ɛaayiz ʔasaafir f(id-daraga) il-luks[i] walla balaaʃ* I want to travel luxury class or not at all. ‖ *ɦaaga luks* the perfect thing, just the thing. *-ʃaqqa luks* a flat meeting certain government specifications stipulating high quality. *-ʃaqqa nuṣṣ[i] luks* a flat one grade below *ʃaqqa luks*. *-ʃaqqa luks[i] luks* a flat of the highest grade according to these same specifications.

ل ك ش

لكش *lukʃ* /coll n/ *[rur]* small undeveloped melon(s).

لكشة *lukʃa* /unit n, pl *-aat*/ *[rur]* a small undeveloped melon.

لكشاية *lukʃaaya* = *lukʃa*.

ل ك ع

لكع *likiɛ* /adj */ given to dawdling or loitering.

لكعة *lakaɛa* /n/ dawdling, loitering. *da miʃ waqt[i] lakaɛa* this is no time to dawdle.

لكعى *likaɛi* or *lukaɛi* /pl *-yya*/ **1** /adj/ given to dawdling or loitering. **2** /n/ dawdler.

لكاعة *lakaaɛa* = *lakaɛa*.

تلكيع *talkiiɛ* = *lakaɛa*.

اتلكع *ʔitlakkaɛ* /vi/ to loiter, dawdle. *min ṣuɣr-a-ha tɦibb[i] titlakkaɛ fil-maɦallaat* ever since she was young she's had a liking for hanging around the shops. - ava *mitlakkaɛ*.

اتلاكع *ʔitlaakiɛ* /vi/ to dawdle, take (too much) time. *bi-yitlaakiɛ fiʃ-ʃuɣl[i] wi-yɛaṭṭal maṣaaliɦ in-naas* he wastes time over the work and so damages people's interests. - ava *mitlaakiɛ*.

ل ك ك

لكّ *lakk (u)* /vi/ to chatter, prattle. - vn *lakk, lakakaan*; ava *laakik*.

لكّاك *lakkaak* /adj */ over-talkative, given to chattering and prattling.

اتلكّك *ʔitlakkik* /vi/ to search for or pick on some trivial matter as an excuse (for anger etc.). - ava *mitlakkik*.

ل ك ل ك

لكلك *laklik* /vt/ to do (s.th.) in a slapdash way, do (s.th.) carelessly and badly. - vn *laklaka*; ava *milaklik*.

اتلكلك *ʔitlaklik* /vi/ to be done in a slapdash way, be done carelessly and badly. - iva *mitlaklik*.

¶ *ʔitlaklik ɛala* to pick on (s.th.) as a pretext. *ʔitlaklik-li ɛala kilma w-qarab-ni* he used a word I said as an excuse to hit me.

ل ك م

لكم *lakam (i)* /vt/ **1** to hit with the fist, punch. **2** to surfeit, cause to feel over-full (of food). *ʔid-dihn[i] b-yilkim* fat makes for satiety. *ʔil-ʔakl[i] b-yilkim* ≈ the food is so heavy and filling that one can't draw a proper breath. - vn *lakm*; ava *laakim*; pva *malkuum*.

لكمة *lakma* /inst n, pl *-aat, lakamaat*/ a blow with the fist, a punch.

لكّميّة *lukkamiyya* /n pl *-aat, lakakiim*/ blow with the fist, punch.

اللكّيم *ʔil-lukkeem* (also *ʔabu l-lukkeem*) /n/ *[path]* mumps.

اتلكم *ʔitlakam* /vi/ **1** to be given a blow with the fist, be punched. **2** to be surfeited, be made to feel over-full. - iva *mitlikim*.

لاكم *laakim* /vi/ to box, fight with the fists. - vn *mulakma*; ava *milaakim*.

ملاكم *mulaakim* /n */ boxer, prize-fighter.

اتلاكم *ʔitlaakim* /vi/ to fist-fight (with o.a.) - ava *mitlaakim*.

ل ك ن [1]

لكنة *lakna, lukna* /n pl *-aat*/ foreign and defective accent.

ل ك ن [2] see ل ا ك ن : *lakin, laakin, lakiin*

ل ك ن د

لوكاندة *lukanda* <It *locanda*> /n pl *-aat*/ hotel.

ل ك و ر

لكور *lakoor* <Fr *raccord*> /n pl *lawakiir, lakoraat*/ pipe coupling.

ل ك ى ه

لاكيه *lakeeh* <Fr *laqué*> /n pl *-aat*/ lacquer, lac, shellac.

ل ل ل ي

اللالّى *ʔil-lalli* /n/ playfulness, light-heartedness.

ʕil-ɋird' b-yilɛab il-lalli the monkey is frolicking about. *baʈʈal ʃuɤl il-lalli* stop mucking about!

ل ل ى [1]

لالا *laala*[1] /vi/ to glitter, shimmer. *ʕin-nuguum bi-tlaali* the stars shine. - vn *milaliyya*; ava *milaali*. see further under ل و ل ى

ل ل ى [2]

لالى *laala*[2] <Copt> /vi/ to ring out (of voice). ‖ *da ʈuul il-leel yilaali* all night long he calls out (from pain). - vn *milaliyya*; ava *milaali*.

ل م

لم *lam*↓ /neg particle/ never. *gamaal lam raʕat-u ɛeen* beauty the like of which has never been seen.

ل م ا ن

لومان، ليمان *lumaan* <Gr *limên*> /n pl *-aat*/ prison.

لومانجى، ليمانجى *lumangi* /n pl *-yya*/ one who is always in and out of prison, jailbird.

ل م ب

لمبة *lamba* (also *lamɖa*↓ and *lanɖa*↓) <It *lampa*> /n pl *lambaat, lumaɖ, lunaɖ*/ 1 lamp. *lambit maktab* desk lamp. *lambit gaaz* paraffin lamp. *lamba ʂafiiḫ* or *lamba ʃawwaaʈi* small oil-lamp (see Pl.B, 2). ‖ *lamba ɋaʈɛiyya* (welder's) acetylene torch. 2 light-bulb. ‖ *lambit radyu* radio valve.

ل م ب د -

لمبدير *lambadeer* <Fr *lampadaire*> /n pl *-aat*/ standard lamp.

ل م ح

لمح *lamaḫ (a)* /vt/ to glimpse, catch sight of. - vn *lamḫ, lamaḫaan*; ava *laamiḫ*; pva *malmuuḫ*.

لمحة *lamḫa* /inst n, pl *-aat*/ a glimpse. *fi-lamḫit baʂar* in the twinkling of an eye.

لمّاح *lammaaḫ*↑ /adj */ perceptive.

ملامح *malaamiḫ* /pl n/ facial features. ‖ *baayin ɛalee malaamiḫ il-ɤaɖab* he looks angry.

اتلمح *ʕitlamaḫ* /vi/ to be glimpsed, be caught sight of. - iva *mitlimiḫ*.

لمّح *lammaḫ* /vi/ to hint. *lammaḫ-li ʕinnu ɛaayiz ɋirʃeen* he hinted to me that he wanted some money. *lammaḫ-li b-ɤaɖab-u* he gave a hint of his anger. ‖ *lamma n-nahaar yilammaḫ* when the day first breaks. - vn *talmiiḫ*; ava *milammaḫ*.

اتلمّح *ʕitlammaḫ* /vi/ 1 (impersonal) passive of *lammaḫ*. *mugarrad ma tlammaḫ-lu fihim ɛala ʈuul* as soon as a hint was dropped he understood straight away. 2 to catch a glimpse. *ʕitlammaḫt' bii w-ʕana maaʃi* I caught sight of him while I was walking along. - ava/iva *mitlammaḫ*.

ل م ز

لمّز *lammiz* /vi/ assonant intensifier used in conjunction with *ɤammiz* (q.v.). *taɤmiiz wi-talmiiz* nudging and winking. - vn *talmiiz*.

اتلمّز *ʕitlammiz* /vi/ assonant intensifier used in conjunction with *ʕitɤammiz* (q.v.). - ava *mitlammiz*.

ل م س

لمس *lamas (i)* /vt/ 1 to touch. *ḫaawil tilmis rukab-ak bi-raas-ak* try to touch your knees with your head. 2 to perceive, sense. *lamast innu mitdaayiɋ* I sensed that he was upset. - vn *lams, lamasaan*; ava *laamis*; pva *malmuus*.

لمسة *lamsa* /inst n, pl *-aat*/ a touch.

ملموس *malmuus*↑ /adj/ tangible, palpable, concrete. *ʕana ɛaayiz nataayig malmuusa* I want tangible results.

ملمس *malmas*↑ /n pl *malaamis*/ 1 touch, feel. *ɋumaaʃ naaɛim il-malmas* cloth soft to the touch. 2 feeler, antenna, tentacle.

اتلمس *ʕitlamas* /vi/ 1 to be touched. 2 to be perceived, be sensed. - iva *mitlimis*.

لمّس *lammis* /vt/ to cause or allow to touch. *lammis-ni l-ɋumaaʃ* he gave me the cloth to feel. - vn *talmiis*; ava/pva *milammis*.

اتلمّس *ʕitlammis* 1 /vt/ to probe, search out. *ʕitlammis-li l-ʕaɛzaar* he tried to find excuses for my behaviour. 2 /vi/ to be caused or allowed to touch. - iva *mitlammis*.

لامس *laamis* /vt/ to touch, come into contact with. *ʕil-ʕaslaak lamsit baɛɖ-a-ha w-ḫaʂal maas* the wires touched and a short-circuit occurred. - vn *milamsa*; ava/pva *milaamis*.

اتلامس *ʕitlaamis* /vi/ to touch one another, come into mutual contact. - ava *mitlaamis*.

التمس *ʕiltamas* /vt/ to request, solicit (s.th. from s.o.). - vn *ʕiltimaas*; ava *miltimis*.

التماس *ʕiltimaas* /n/ 1 request, solicitation. 2 petition. 3↓ *[elec]* short-circuit.

ملتمس *multamas* /n/ petition.

ل م ض [1]

لمض *limiɖ* /adj * and pl *lumaɖa*/ loquacious, voluble.

لماضة *lamaaɖa* /n/ loquacity, volubility.

اتلمّض، تلمّظ ʔitlammaḍ /vi/ to smack the lips. *kull[i] m-adxul il-maṭbax ʔalaqii bi-yitlammaḍ* every time I go into the kitchen I find him smacking his lips. ‖ *kal wi-tlammaḍ* he ate and smacked his lips too, he thoroughly enjoyed the meal. - ava *mitlammaḍ*.

اتلامض ʔitlaamiḍ /vi/ **1** to talk a lot. **2** to engage in repartee. - ava *mitlaamiḍ*.

ل م ض [2] see ل م ب: *lamḍa*

ل م ظ see ل م ض [1]

ل م ع

لمع *lamaʕ (a)* /vi/ to shine. - vn ***lamʕ, lamaʕaan***; ava *laamiʕ*.

لمعة *lamʕa* /n/ shine, lustre. ‖ *ʔabu lamʕa* epithet for an extravagant boaster (after a popular comedian of the same name).

لمعي *lamʕi* /adj/ shiny.

لمعيّة *lamʕiyya* /n/ brightness, shine.

ألمع *ʔalmaʕ* /el/ more/most shiny.

لمّاع *lammaaʕ* /n pl ***lammaaʕa, lammaʕiin***/ polisher, one who polishes.

لمّاعة *lammaaʕa* /n pl *-aat*/ polishing cloth.

لميع *lammiiʕ* /adj/ gleaming, shining. *wid-dahab fii lammiiʕ wi-fii maṭfi* as for gold, there is shiny (gold) and dull (gold). ‖ *gild[i] lammiiʕ* patent leather. - *waraq lammiiʕ* glossy photographic paper.

لمّع *lammaʕ* /vt/ to polish, make shine. *lammaʕ gazmit-ak* polish your shoes! - vn *talmiiʕ*; ava/pva *milammaʕ*.

تلميعة *talmiiʕa* /inst n, pl *-aat*/ a polishing.

اتلمّع ʔitlammaʕ /vi/ to be polished. - iva *mitlammaʕ*.

استلمع ʔistalmaʕ /vt/ **1** to consider shiny. **2** to select for shininess. *ʔistalmaʕ gazma wi-ftirii-ha* choose a shiny pair of shoes and buy them. - ava *mistalmaʕ*.

ل م ل م

لملم *lamlim* **1** /vt/ to gather up, gather together. *lamlim ḥagaat-ak wi-mfi* gather up your stuff and get out! **2** /vi/ to mix with people below one's station, go slumming. - vn *lamlama*; ava/pva *milamlim*.

اتلملم ʔitlamlim /vi/ to be gathered up, be gathered together. - iva *mitlamlim*.

ل م م

لمّ *lamm (i)* /vt/ **1** to collect, gather. *limm il-waraq wi-rmii fis-sabat* collect up the paper and throw it in the basket. *lammit il-ɣasiil min ʕal-ḥabl* she gathered the washing from the line. *ʔilli ylimm-u min hina ybaʕtar-u min hina* whatever he acquires from one quarter, he squanders in another. ‖ *limm[i] ʔiid-ak* (1) to make a fist. (2) don't be so extravagant. **2** to hold in check. *limm[i] lsaan-ak* hold your tongue! *ʔilli mʕaa kilma ylimm-a-ha* he who has a word (of reproach, or protest) should keep a check on it. **3** *[soccer]* to take over (a ball). — /vi/ **4** to come together, gather. *ʔin-naas ḥa-tlimm[a] ʕaleena* people will gather around us. **5** to heal over (of a wound). - vn *lamm, lamamaan*; ava *laamim*; pva *malmuum*.

لمّة *lamma[1]* /n/ crowd, mob. ‖ *ʔil-baraka fil-lamma* ≈ the more the merrier. - *ʔil-ḥikaaya baqit lamma* it became pandemonium.

لامة *limaama* /n/ riff-raff, rabble.

لمّام *lammaam* /n */ collector, gatherer. *da lammaam sabaaris wi-zbaala* he collects cigarette ends and rubbish.

ملمّ *malamm* /n pl *-aat*/ gathering place. *beet-i malamm* everyone congregates at my house.

اتلمّ ʔitlamm /vi/ **1** to be collected, be gathered. **2** to gather, mass, assemble. *ʔin-naas itlammit ʕaleena* people gathered around us. *ʔitlammu ʕalee wi-ḍarabuu* they ganged up on him and beat him up. - ava/iva *mitlamm*.

¶ *ʔitlamm[a] ʕala* (1) to get in contact with (s.o.). *ma-ʕandii-ʃ il-ʕinwaan wi-miʃ ʕaarif ʔatlamm[a] ʕaleeha* I don't have the address and I don't know how to get in touch with her. *ʔitlamm[a] ʕala kabʃit ʕiyaal ṣuyyaʕ* he joined up with a bunch of no-good kids. (2) to take a hold on (o.s.), get a grip on (o.s.). *miʃ ʔaadir ʔatlamm[a] ʕala nafs-i* I can't get a hold of myself, I can't pull myself together. *miʃ ʕaarif ʔatlamm[a] ʕala gism-i* I can't get my body in order.

ألمّ *ʔalamm↑* /vi/ **1** to happen (to s.o.). *ʔalammit bii muṣiiba* a disaster befell him. **2** to familiarize oneself. *ʔana ʔalammeet bil-mawḍuuʕ kull-u* I acquainted myself with the whole subject. - vn *ʔilmaam*; ava *mulimm*.

إلمام *ʔilmaam↑* /n/ capability, adequate knowledge or ability. *ʕandu ʔilmaan bi-ʕuluum ik-kimya* he has a fair knowledge of the chemical sciences.

ملمّ *mulimm↑* /adj */ capable, having adequate knowledge or ability. *mulimm[i] bil-ʔiraaya wil-kitaaba* he can read and write.

ل م م ا

لمّا *lamma[2]* /conj/ **1** when. *ma-kunt[i]-ʃ b-aʕraf lamma tuxrug* I used not to know when she went out. *lamma laʔeet il-filuus inbasaṭt* when I found the money, I was happy. **2** until. *yaklu lamma yifbaʕu* they eat until they're full. *ma-baʔenaa-ʃ nifuf-ha lamma nsiina fakl-a-ha ʔeeh* we haven't seen her for so long we've

forgotten what she looks like. *ʕismaʒ lamma ʃaqul-lak* hang on till I tell you! **3** if, since. *lamma ʕintu mistaʒgiliin waqfiin kida leeh* if you are in a hurry, why are you standing around like that? **4** even if. *lamma ʃakuuṅ ḫ-amuut* even if I were to die. *miʃ ḫa-yaxd-u lamma ykuun ʃalmaaʒ* he wouldn't take it even if it were diamonds.

ل م ن [1] see ل م ا ن: *lumaan, lumangi*

ل م ن [2] see ل م و ن: *lamuun, lamuuna, lamuuni*

ل م ن ا –
ليموناتة *lamunaata* <It *limonata*> /n/ lemonade.
ليمونادة *lamunaada* = *lamunaata*.

ل م و ن
ليمون *lamuun* /coll n/ lemon(s); particularized as *lamuun baladi* Egyptian lemon(s) (Citrus limonum var. pusilla) and *lamuun ʃaḍalya* common lemon(s) (Citrus limonum var. vulgaris). *lamuun ḫilw* round bland variety of lemon.
ليمونة *lamuuna* /unit n, pl *-aat*/ a lemon. ‖*lamuuna f-balad ʠarfaana [prov]* ≈ just what's needed.
ليموني *lamuuni* /adj/ lime-green.

ل م ي ه
لاميه *lameeh* <Fr *lamé*> /n/ fabric with a glittering finish, *lama*, (loosely also) satin.

ل ن ت ي ب
لينوتيب *linutiib* <Fr> /n/ linotype. *makan linutiib* linotype machines. - also *linyu*.

ل ن ت ؤ ت
لنتوت *lantuut* /n pl *lanatiit*/ peg on the beam of a plough, or of a *saʠya*, for the attachment of harness (see Pl.D, 13). - also *ʃantuut, bantuut*.

ل ن ج
لنج *lang: gidiid lang* brand-new.

ل ن د ن
لندن *landan, lundun↓* /prop n/ London.

ل ن ش
لنش *lanʃ* <Engl> /n pl *-aat*/ *[naut]* launch.

ل ن ش ن
لنشن *lanʃun* <Engl> /n/ (beef) luncheon meat, (beef) luncheon sausage.

ل ن ض see ل م ب: *lamḍa*

ل ن و ه
لينوه *linooh* <Fr *linon*> /n/ lawn. *ʠamiiṣ linooh* a lawn shirt.

ل ن ى
لنية *linya* <It *linea*> /n pl *-aat*/ **1** one-eighth of an inch. *ʃazmiil linya* a chisel with a one-eighth inch bit. *musmaar linyiteen* a screw with a one-quarter inch thread. **2** electric power cable.

ل ن ى و
لنيو *linyu* <Fr *linotype*> /n/ linotype. *makan linyu* linotype machines. - also *linutiib*.

ل ه ب
لهب *lahab↑* /coll n/ flame(s).
التهب *ʕiltahab↑* /vi/ **1** to become ignited. **2** to become inflamed. - vn *ʕiltihaab*; ava *miltihib*.
التهاب *ʕiltihaab* /n pl *-aat*/ inflammation, (loosely also) infection.
ملتهب *multahib* /adj/ flammable.

ل ه ت see ل ه و ت: *lahuut*

ل ه ث see ل ه س

ل ه ج [1]
لهج *lahag (i)* /vt/ to cause to rush, hustle. *malhuug ʒala ʃeeh* what is the rush? - vn *lahagaan*; ava *laahig*; pva *malhuug*.
لهجة *lahga[1]* /inst n, pl *-aat*/ a rush, a hurry.
اتلهج *ʕitlahag* /vi/ to be rushed, be hurried. - iva *mitlihig*.

ل ه ج [2]
لهجة *lahga[2]* /n pl *-aat*/ **1** dialect. **2** accent. **3** manner of speaking.

ل ه س
لهث *lahaṣ↑ (a)* /vi/ to pant. - vn *lahṣ*; ava *laahiṣ*.

ل ه ط
لهط *lahaṭ (a)* /vt/ **1** to guzzle (food). **2** to embezzle (money). - vn *lahṭ, lahaṭaan*; ava *laahiṭ*; pva *malhuuṭ*.
لهطة *lahṭa* /n pl *-aat*/ large mouthful (of something soft, e.g., jelly, cream, etc.). *lahṭit ʠifṭa* a large mouthful of cream. *bitt[1] zayy lahṭit il-ʠifṭa* a delicious girl.
اتلهط *ʕitlahaṭ* /vi/ **1** to be guzzled (of food). **2** to be embezzled (of money). - iva *mitlihiṭ*.

ل ه ف

لهف *lahaf (a)* /vt/ **1** to snatch, swipe. ***lahaf il-bint*ˈ *minni b-kilmiteen ḫilwiin*** he stole the girl from me with a couple of sweet words. *law ɣifiltˈ ɛannu dqiiqa ḫa-yilhaf filuus-ak* if you take your eyes off him for a minute, he will pinch your money. **2** to hit, strike. ***lahafit-u l-ɛarabiyya*** the car struck him. *ʕil-mudarris lahaf-u ɋalameen* the teacher gave him a slapping. - **vn** ***lahf***; ava *laahif*; pva *malhuuf*.

¶ *lahaf ɛala* to give cause to worry over, cause to be anxious about. *ʕinta dayman laahif ʕumm-ak ɛaleek kida leeh* why do you always have to make your mother anxious about you like that?

لهفة *lahfa* /n/ **1** worry, anxiety. ***lahfit-ha ɛala-bn-a-ha*** her anxiety over her son. ‖*ya lahfit nafs-i* ≈ alas! **2** yearning, desire.

ملهوف *malhuuf* /adj */ yearning, longing, excited.

اتلهف *ʔitlahaf* /vi/ **1** to be stolen, be swiped. **2** to be hit, be struck. - iva *mitlihif*.

اتلهّف *ʔitlahhaf* /vi/ to yearn, be eager. ***b-atlahhaf ɛalee*** I am longing to see him. - vn *talahhuf*ˆ; ava ***mitlahhif***.

ل ه ل ب

لهلب *lahlib* /vt/ **1** to sear (of acid, dry heat and hot liquids). *ʔif-furba lahlibit-li buɋɋ-i* the soup burnt my mouth. *ʔil-ḫaamiḍ bi-ylahlib il-gild* acid burns the skin. **2** to cause a burning sensation in. ***ʔil-ḫumma lahlibit gism-i*** the fever burned me up. ‖ *ʔil-bint*ˈ *lahlibit-ni* the girl set my heart aflame. - *ʔasɛaar milahliba* horrendous prices. – /vi/ **3** to be seared. *gild-i lahlib mil-ḫaamiḍ* my skin was burnt by the acid. **4** to experience a burning sensation. *gism-u mlahlib mil-ḫumma* his body is burning with fever. - vn *lahlaba*; ava/pva ***milahlib***.

ملهلب *milahlib* /adj */ active, dynamic, on-the-ball.

لهلوب *lahluub* /n pl *lahaliib*/ flame, tongue (of fire).

لهلوبة *lahluuba* /n pl *lahaliib*/ **1** flame. ‖*gayyiin waraana zayy il-lahluuba* coming up after us lickety-split. **2** active and dynamic person, ball of fire.

لهاليبو *lahaliibu* /n/ *[slang]* active and dynamic person, ball of fire.

اتلهلب *ʔitlahlib* /vi/ **1** to be seared. **2** to experience a burning sensation. *baṭn-i b-itlahlib* I get a burning feeling in my stomach. - iva *mitlahlib*.

ل ه ل ه

لهله *lahlah* /vt/ to cause to pant, rush and flurry. - vn *lahlaha*; ava *milahlah*.

اتلهله *ʔitlahlah* /vi/ to be made to pant, be rushed and flurried. *ʔinta gayyˈ mitlahlah ɛala ʔeeh* what are you rushing here in such a state for? - iva ***mitlahlah***.

ل ه م

لهم *laham*↓ *(i)* /vt/ to inspire. *rabb-i-na laham-ni ʕaagi n-nahar-da* God made me come today. - vn *lahamaan*; ava *laahim*.

ألهم *ʔalham* (also *ʔanham*↓) /vt/ to inspire (s.o.) with (s.th.). *ʔalham-u rabb-i-na ṣ-ṣabr* God inspired him with patience. - vn *ʔilhaam*; ava *mulhim*; pva *mulham*.

إلهام *ʔilhaam*ˆ /n/ inspiration.

استلهم *ʔistalham*ˆ /vi/ to draw inspiration for. *ʔistalham il-ɋiṣṣa min siira faɛbiyya* he drew the inspiration for the story from a folk epic. - vn *ʔistilhaam*; ava *mustalhim*.

ل ه و see ل ه ى: *lahw, lahwa*

ل ه و ت

لاهوت *lahuut* /n/ *[Chr]* **1** divinity. *lahuut il-masiiḫ wi-nasuut-u* the divinity and humanity of Christ. **2** theology. *kulliyyit lahuut* theological college.

لاهوتى *lahuuti* *[Chr]* **1** /adj/ theological. **2** /n */ theologian.

ل ه و ج

لهوج *lahwig*, /vt/ to rush, hurry. *lahwig-ni xallaa-ni ʕabawwaz if-fuxl* he rushed me and made me mess up the work. - vn *lahwaga*; ava/pva *milahwig*.

اتلهوج *ʔitlahwig* /vi/ to be hurried, be rushed. - iva *mitlahwig*.

ل ه ى

لهى *laha (i)* /vt/ **1** to distract. *ʔilhi l-kalbˈ b-ɛaḍma [prov]* distract the dog with a bone (and it won't bite you). **2** to afflict (in contexts of cursing or abusing). *yilhii-k ɛala ɛeen-ak ya bɛiid* may you be afflicted with the loss of your sight! *ʔeeh illi lahaa-k xallaa-k ʔiddet-huu-lu* why the hell have you given it to him? - vn *lahayaan*, *lahw*; ava *laahi*; pva *malhi*.

لهو *lahw* /n/ distraction (caused by anguish or bewilderment). *ya lahw-i* conventional exclamation of dismay or distress. *ya lahw-i ɛaleek ya-xuu-ya [women in trad soc]* what a disaster it is to lose you! (exclamation of mourning).

لهوة *lahwa = lahw*.

ملهى *malha* /n pl *malaahi*/ night-club. ‖*(madiinit) il-malaahi* fun-fair, amusement park.

ملهيّة *milahiyya* /n/ distraction.

اتلهى *ʔitlaha* /vi/ **1** to be or become distracted. *ʔitlaha f-kitaab* he became absorbed in a book. **2** to be afflicted (in contexts of cursing or abusing). *ʔitlihi ʔiṭlaɛ min*

hina get the hell out of here! *ʕitlihi* get lost! stop being a nuisance! shut up! - ava/iva *mitlihi*.

ل و see also ل و ل ا and ل و م ا

لو *law* /conj/ **1** /usu introducing hypothetical condition/ if. *huwwa law kaan hina kaan ɋatal-ak* if he had been here, he would have killed you. *law kaan ʕaxuu-ya hina kaan ḩa-yiddii-lak* if my brother were here, he would give (it) to you. *law tiigi bukra ḩ-addii-lak il-filuus* if you come tomorrow, I'll give you the money. ‖*ʃagarit law ma-b-tiṫraḩ-ʃi [prov]* the 'if' tree doesn't bear fruit. **2** even if. *ʕana law miwaafiɋ ɛala kida miʃ ḩ-awaafiɋ ɛala kull[i] kalaam-ak* even if I agree to that, I shan't agree to all you say.

¶ *wa-law* /conj/ **1** (also *wa-law ʕinn*) even though, even if. *b-aḩibb-ak wa-law ʕinni zaɛlaana minnak* I love you, even though I am angry with you. *xud il-ʕaṣiila wa-law kaanit ɛal-ḩaṣiira [prov]* marry a well-born woman even if she be poor. **2** even as much as, even as little as. *ʕaɋdar ʕagiib wa-law miit kiilu kabaab* I can bring as much as one hundred kilos of kebab. *xallii-na nfuuf-ak wa-law marra fis-sana* let us see you, even if it's only once a year. — /interj/ **3** so what! even so! *ʕana ruḩt-i-lu mbaariḩ. - wa-law - laazim tiruḩ-lu bukra barḍu* 'I went to see him yesterday.' 'So what! You still have to go and see him again tomorrow.'

ل و ان

لوان *liwaan* (also *ʕiwaan*[ṫ]) <P *aiwân*> /n pl *-aat/ [obsol]* **1** raised floor on either side of a *durɋaaɛa*, estrade. **2** small recess with a raised floor off the main room of a public bath.

لوانجي *liwangi* /n pl *-yya/ [obsol]* male upper servant.

لوانجيّة *liwangiyya* /n pl *-aat/ [obsol]* female upper servant.

ل و ء see [2] ل و ى

ل و ب

لوب *luub* <Fr *loupe*> /n pl *-aat/* magnifying glass.

ا ل و ب ى see [2] ل ب ى : *lubya*

ل و ت

لوت *luut* /n/ Mediterranean and Red Sea fish of the species Sciae.

ل و ث see ل و س

ل و ج

لوج *loog, looj* <Fr *loge*> /n pl *ʕalwaag, ʕalwaaj/* theatre or cinema box.

[1] ل و ح

لوح *lawaḩ (i)* /vt/ to twist, bend (out of shape). *lawaḩt[i] rigl-i* I twisted my ankle. ‖*lawaḩ-ni b-ɛaṣaaya* he beat me out of shape with a stick, he gave me a real whacking. *-bint[i] tilwiḩ* ≈ a stunning girl. - vn *lawaḩaan, lawaḩ*; ava *laawiḩ*; pva *malwuuḩ*.

لوحة *lawḩa* /inst n, pl *-aat/* a twist, a bend.

اتلوح *ʕitlawaḩ* /vi/ to be or become twisted or bent (out of shape). *rigl-u tlawaḩit* his leg got twisted. - ava/iva *mitliwiḩ*.

لوّح *lawwaḩ[ṫ]* /vi/ **1**↑ to wave (with the hand). **2** *[path]* to suffer spasms. - vn *talwiiḩ*; ava *milawwaḩ*.

تلويحة *talwiiḩa* /inst n, pl *-aat, talawiiḩ/ [path]* a spasm.

[2] ل و ح

لوح *looḩ* /n pl *ʕalwaaḩ/* **1a** plank, board. *looḩ bunṫi* scaffolding plank. **1b** baker's wooden tray. **1c** winnowing shovel. **2** sheet, plate (of metal, glass etc.). *looḩ (ʕirdiwaaz)* schoolroom slate. ‖*looḩ talg* block of ice. **3** shoulder blade, scapula. *beet il-looḩ* shoulder (of meat). **4** oaf. *xud maɛaak il-looḩ is-sawwaaɋ ig-gidiid da* take that dimwit of a new driver with you.

لوحة *looḩa* /n pl *-aat, liwaḩ/* **1** board (including, e.g., notice-board, sign-board, drafting board, panel). **2** plate (including, e.g., name-plate, number-plate, licence-plate). **3** painting, drawing, design draft, sketch. **4** *[print]* frame of type. **5** chart.

لوّح *lawwaḩ[2]* /vt/ to fit with (wooden) planking or (metal) plating. - vn *talwiiḩ*; ava/pva *milawwaḩ*.

اتلوّح *ʕitlawwaḩ* /vi/ to be fitted with (wooden) planking or (metal) plating. - iva *mitlawwaḩ*.

استلوح *ʕistalwaḩ* /vi/ **1** to act like a dullard. *waaɋif mistalwaḩ leeh* why are you standing around like a blockhead? **2** to consider, or take for, a dullard. - vn *ʕistilwaaḩ*; ava *mistalwaḩ*.

[1] ل و د

لاد *laad (u)* /vi/ to suffer. *ʕil-waaḩiḍ laayid min ig-guuɛ* I am starving. - vn *looda, lawadaan, layadaan*; ava *laayid*.

لايد *laayid* /adj */ low, loutish, sluttish. *ʕibn il-layda* son of a bitch.

لوّد *lawwid[1]* /vt/ to subject to protracted discomfort. *xad-ni yvaddii-ni lawwid-ni mig-guuɛ* he took me to

have lunch and kept me waiting till I was starving. *ʕil-ḥubb[1] lawwid ʔalb-u* love set his heart aflame. - vn *talwiid*; ava *milawwid*.
اتلوّد *ʔitlawwid* /vi/ to be subjected to protracted discomfort. - iva *mitlawwid*.

ل و د [2]
لوّد *lawwid[2]: la tḥawwid wala tlawwid* it goes straight to the target.

ل و ذ see ل و ز [2]

ل و ر و
لاورو *lawru* (also *waraʔ lawru*) <It *lauro*> /coll n/ bay leaves.

ل و ر ى
لورى *luuri* <Engl> /n pl *lawaari, luriyyaat*/ **1** lorry, truck. **2** hand-operated truck used by railway labourers.

ل و ز [1]
لوز *looz* /coll n/ **1** almond(s). ‖*looz ya tirmis looz [vendor's cry]* delicious lupins as sweet as almonds! **2** cotton boll(s). — /adj invar/ **3** delicious. *bint[1] looz ʔawi* a really delectable girl.
لوزة *looza* /unit n, pl *-aat*/ **1** an almond. ‖*looza salt* motif in tent appliqué design (see Pl.H, 9). **2** a cotton boll. — /n pl *liwaz*/ **3** tonsil. *ʕandu l-liwaz* he has tonsillitis. **4** leather reinforcing patch put on a slipper of the *bulya* type at the point where the leather heel and sole strips meet. **5** kind of spot weld.
لوّز *lawwiz* **1** /vt/ to put a *looza* on (a slipper of the *bulya* type). **2** /vi/ to form bolls (of cotton). - vn *talwiiz*; ava *milawwiz*.
اتلوّز *ʔitlawwiz* /vi/ to be reinforced with a *looza* (of a slipper of the *bulya* type). - iva *mitlawwiz*.

ل و ز [2]
لاذ *laaz (u)* /vi/ to take refuge. *ʔin-naas illi bi-tluuz liihum dool miʃ ḥa-yinfaʕuu-k* those people you're relying on will let you down. *ʔana laayiz bi-ganaab illaah* I am taking refuge in God. - vn *lawazaan*; ava *laayiz*.

ل و س
لوّث *lawwis*↑ /vt/ to pollute, contaminate. - vn *talwiis*; ava/pva *milawwis*.
اتلوّث *ʔitlawwis*↑ /vi/ to be polluted, be contaminated. - vn *talawwus*; iva *mitlawwis*.

ل و ش
لاش *laaʃ (u)* /vt/ **1** to gobble up, devour completely. *ʔid-diib laaʃ il-xaruuf* the wolf gobbled up the sheep. **2** to embezzle (money). **3** to deal (a hard blow or the like) to. *laʃ-ni ʔalam* he slapped me hard. *laʃ-ni kurbaag* he gave me a whipping. **4** to sting (of a scorpion, snake etc.). - vn *lawaʃaan*; ava *laayiʃ*.
لوّاشة *lawwaaʃa* /n pl *-aat*/ twitch (for restraining an animal).
اتلاش *ʔitlaaʃ* /vi/ **1** to be gobbled up. **2** to be embezzled. **3** to be dealt (e.g., a blow). **4** to be stung. - iva *mitlaaʃ*.
لوّش *lawwiʃ* **1** /vt/ *[agric]* to tie (a crop) into sheaves or bundles. **2** /vi/ to grope about (in the dark, in the manner of a blind person, etc.). - vn *talwiiʃ*; ava/pva *milawwiʃ*.
تلويشة *talwiiʃa* /n pl *-aat, talawiiʃ*/ a sheaf, a bundle (of a crop, especially sugar cane).
اتلوّش *ʔitlawwiʃ* /vi/ to be tied into bundles or sheaves. - iva *mitlawwiʃ*.

ل و ص
لاص *laaṣ (u)* /vi/ to be at a loss, be in a muddle. *laaṣ ʔil-imtiḥaan* he was at a loss in the exam. - vn *lawaṣaan, layaṣaan*; ava *laayiṣ*.
لوصة *looṣa* /n pl *-aat*/ state of bewilderment, fix.
لاوص *laawiṣ* /vi/ to dither, vacillate. prevaricate. *ʔaʕad yilaawiṣ wi-ma-rḍii-ʃ yiʕtirif bil-ḥaʔʔ* he kept shilly-shallying and wouldn't tell the truth. - vn *milawṣa*; ava *milaawiṣ*.
اتلاوص *ʔitlaawiṣ* = *laawiṣ*. - ava *mitlaawiṣ*.

ل و ط [1]
لاط *laaṭ[1] (u)* /vi/ to loaf around, hang about. *ṭuul in-nahaar laayiṭ barra* he hangs around out (in the streets) all day long. - vn *lawaṭaan*; ava *laayiṭ*.
لوّاطة *lawwaaṭa* /n pl *-aat*/ (animal-drawn) beam used for levelling tillage under water.
لوّط *lawwaṭ* /vt/ to level or smooth (land which is under water) with a *lawwaaṭa*. - vn *talwiiṭ*; ava/pva *milawwaṭ*.
اتلوّط *ʔitlawwaṭ* /vi/ passive of *lawwaṭ*. - iva *mitlawwaṭ*.

ل و ط [2]
لاط *laaṭ[2] (u)* /vi/ to have sexual relations with another male (of a male). - vn *lawaṭaan*; ava *laayiṭ*.
لوطى *luuṭi* /n pl *-yya*/ active homosexual.

ل و ع
لوعة *looʕa, lawʕa* /n/ (mental) agony. *ḥa-tiktim*

loɛit-ha guwwa ɋalb-a-ha she will conceal her agony in her heart.

لوع *lawaɛ* /n/ deviousness. *da malyaan lawaɛ* he is all deviousness.

لوّع *lawwaɛ* /vt/ **1** to subject to subtle (and usually protracted) torment. *ʔil-ħubb[i] lawwaɛ-ni* love made me suffer agonies. *ʔil-muwaẓẓaf lawwaɛ-na kull[i] yoom bi-yɋuul bukra* the employee kept us on tenterhooks, saying 'Tomorrow' every day. **2** to make devious or tortuous. *ma-tlawwaɛ-ʃ[i] kalaam-ak* don't mince your words! — /vi/ **3** to act in a devious or tortuous way. - vn *talwiiɛ*; ava/pva *milawwaɛ*.

ملوّع *milawwaɛ* /adj */ artful, worldly-wise.

اتلوّع *ʔitlawwaɛ* /vi/ **1** to be subjected to subtle (and usually protracted) torment. **2** to act or be made to act in a devious manner. - iva *mitlawwaɛ*.

لاوع *laawiɛ* /vt/ to string (s.o.) along, bamboozle. *ʔis-simsaar lawiɛ-ni l-ħadd[i] ma xassar-ni ʔalf[i] gneeh* the agent led me on and lost me a thousand pounds. - vn *milawɛa*; ava *milaawiɛ*.

اتلاوع *ʔitlaawiɛ* /vi/ to act deviously. *ʔit-taagir itlaawiɛ ɛaleehum fit-taman* the trader swindled them over the price. *ma-titlawiɛ-lii-ʃ* don't play games with me! - ava *mitlaawiɛ*.

ل و ف [1] see also **ء ل ف [1]** and **و ل ف [1]**

لاف *laaf (u)* /vi/ to become friendly or intimate. *ʔil-walad da laayif ɛala* (or *bi-*) *ʔaṣħaab miʃ kuwayyisiin* that boy is associating with unpleasant companions. *ʔil-bint[i] diyya bi-tluuf ɛala* (or *bi-*) *ʔayy[i] waaħid* this girl takes up with anyone. - vn *loof, lawafaan*; ava *laayif*.

اتلاف *ʔitlaaf* /vi/ (impersonal) passive of *laaf*. *dool naas yitlaaf ɛaleehum* are these people of the type (one) comes to feel at home with? - iva *mitlaaf*.

لوّف *lawwif* **1** /vt/ to cause to feel friendly or intimate. *ʔil-bint[i] di lawwifit-u ɛaleeha min yoom waaħid* this girl managed to hook him in one day. **2** /vi/ to become friendly or intimate. - vn *talwiif*; ava/pva *milawwif*.

اتلوّف *ʔitlawwif* /vi/ passive of *lawwif* 1. - iva *mitlawwif*.

ل و ف [2]

لوف *luuf* /coll n/ loofah plant, dish-cloth gourd (Luffa aegyptica, the fibre of which is commonly used as a scouring pad). ‖*luuf ʔaħmar* palm fibre.

لوفة *luufa* /pl -aat/ unit noun of *luuf*.

ل و ق [1]

لوق *lawaɋ* /n/ pronouncing of *r* as *y* (a speech defect).

ألوق *ʔalwaɋ* /adj, fem *looɋa*, pl *luuɋ*/ having the speech defect called *lawaɋ*.

ل و ق [2]

لوق *luuɋ, looɋ: baab il-luuɋ, baab il-looɋ* /prop n/ district of central Cairo.

ل و ك

لاك *laak (u)* /vi/ to speak critically, bring accusations. *bi-yluuku f-sumɛit-ha* they are tearing her reputation to shreds. - ava *laayik*.

لوّك *lawwak* /vi/ to chew at. *ɛammaal yilawwak il-ʔakl[i] f-buɋɋ-u* he keeps chewing the food around in his mouth. - vn *talwiik*; ava/pva *milawwak*.

اتلوّك *ʔitlawwik* /vi/ **1** to be chewed at. **2** to chew away (at s.th.). - ava/iva *mitlawwik*.

ل و ل see **ل و ل ى**: *luuli, luliyya*

ل و ل ا see also **ل و** and **ل و م ا**

لولا *loola* (also *lolaa-ʃ*) /conj, w foll pron suff *lolaa-*/ but for, were it not for. *lolaay kaan ɋatal-ak* but for me, he would have killed you. *loola musaɛdit ʔaxuu-ya kaan ɛaɋl-i ṭaar* but for the help of my brother, I should have gone crazy. *lolaa-ʃ ik-kalb[i] hina ma-kunt[i]-ʃ ɛirift inn il-ħaraami fil-beet* had the dog not been here I wouldn't have known the thief was in the house. - also *looma*.

¶ *loola ʔinn* but for the fact that, were it not for the fact that. *loola ʔinnu ɛiyi kaan maɛaana dilwaɋti* if he hadn't fallen ill, he'd be with us now.

ل و ل ب

لولب *lawlab* /n pl *lawaalib*/ **1** spring, coil. *lawlab baakim* valve spring. **2** coil (intra-uterine device).

لولبي *lawlabi* /adj */ **1** spiral, helical. ‖*raɋɋaaṣa lawlabiyya* undulating dancer. **2** devious.

ل و ل و

لولو *lawliw* /vt/ to twist, coil. ‖*ʔil-mayya s-saɋɋa lawliwit maṣariin-i* cold water gave me cramps in the stomach. - vn *lawlawa*; ava/pva *milawliw*.

اتلولو *ʔitlawliw, ʔitlawlaw* /vi/ **1** to slip away, wriggle away. **2** to become twisted. *ħabl it-tilifoon ʔitlawlaw* the telephone cord has become twisted. - ava *mitlawliw*.

ل و ل ى see also **ل ل ى [1]**

لولى *luuli* /coll n/ **1** pearl(s). **2** *[fig]* gleaming teeth.

لولية *luliyya* **1** /unit n, pl -aat/ a pearl. **2** /n pl *lawaali*/ copper mounting for the reed of the *muzmaar*.

ل و م

لام *laam²* *(u)* /vt/ to blame, reproach. *miraat-u bi-tluum-u ɛala maṣariif-u l-kitiira* his wife blames him for his heavy spending. - vn *loom, malaam, malaama, lawamaan*; ava *laayim*; pva *maluum↑*.

ملامة *malaama* /n/ blame, reproach. ‖*loola l-malaama* ... were it not reprehensible ..., as in *loola l-malaama kunt^i ḍarabt-u ɣalam* but for the shame of doing it, I would have slapped him.

اتلام *ʔitlaam* /vi/ to be blamed. - iva *mitlaam*.

ل و م ا see also ل و and ل و ل ا

لوما *looma* (also *lomaa-f*) /conj, w foll pron suff *lomaa-/* but for, were it not for. *lomaa ɛaleehum ma-kanuu-ſ liqyu yaklu* but for his helping them they wouldn't have had anything to eat. - also *loola*.

ل و م ا ن see ل م ا ن: *lumaan*

ل و ن ¹

لون *loon* /n pl *ʔalwaan*/ **1** colour. *loon-u ʔazraq* it's blue. **2** colouring matter. *ʔalwaan mayya* water colours. *ʔalwaan ſamɛ* wax crayons. *ʔalwaan zeet* (artist's) oil paints. **3** style, type. *fii ʔaſkaal wi-ʔalwaan* there are all sorts and types. *kull^i muxanni lu loon* every singer has his own style.

لون *liwin* /adj */ outgoing and (perhaps a little too) approachable (usually of a woman).

لوّن *lawwin* **1** /vt/ to colour. *ʔin-naqqaaſ lawwin il-ħeṭaan ʔaħmar* the decorator coloured the walls red. — /vi/ **2** to begin to wear coloured clothes (of women, after wearing black during a period of mourning). **3** to ripen (of fruit). - vn *talwiin*; ava/pva *milawwin*.

ملوّن *milawwin* /adj/ multi-coloured. *ɣamiiṣ milawwin* a coloured (as opposed to a single colour) shirt.

ملوّن *mulawwan* /adj */ coloured, non-white.

اتلوّن *ʔitlawwin* /vi/ to be coloured.. *ʔil-ɣumaſaat bi-titlawwin bis-sabya* fabrics are coloured by means of dye. ‖ *ʔil-manikaan titlawwin ħasab il-fustaan* the model takes on the characteristics of the dress. - iva *mitlawwin*.

متلوّن *mutalawwin* /adj */ time-serving, opportunist.

ل و ن ² see ل و ا ن: *liwaan, liwangi, liwangiyya*

ل و ن د

لوندة *lawinda* <It *lavanda*> /n/ lavender. *mayyit lawinda* lavender water.

ل و ن د ى

لوندى *lawindi* /n/ highfalutin talk. -/adverbially/ *bi-yikkallim lawindi* he talks like a toff.

ل و ى ¹

لوى *lawa (i)* /vt/ **1** to bend. *huwwa raagil ɛitra yiɛraf yilwi l-ħadiid bi-ʔiid-u* he's a strong man, able to bend iron (bars) with his bare hands. **2** to twist. ‖*lawa buuz-(u)* or *lawa wiff-(u)* to scowl. — /vi/ **3** to writhe. *baṭn-u b-tiwgaɛ-u b-yilwi biiha* his stomach hurts and he is writhing with it. - vn *lawy, layy*; ava *laawi*; pva *malwi*.

لىّ *layy¹* /vn/ ‖*ṭayy^i ɛala layy* on an empty stomach, as in *baat ṭayy^i ɛala layy* he went to bed supperless.

لوية *lawya* /inst n, pl *-aat*/ a bend, a twist, a writhe.

لىّ *layy²* /n pl *-aat*/ flexible hose (of a water-pipe, see Pl.J, 4).

لويّة *lawiyya* /n/ convolvulus.

ملاوى *malaawi* /pl n/ *[rur]* pegs (of a rebab).

التواءة *ʔiltiwaaʔa↑* **1** /n pl *-aat*/ twist or bending (of the body). **2** *ʔil-ʔiltiwaʔaat* /pl n/ *[path]* nitrogen narcosis, the bends.

اتلوى *ʔitlawa* /vi/ **1** to be bent. **2** to be twisted. - iva *mitliwi*.

اتلوّى *ʔitlawwa* /vi/ to writhe, squirm. *ɣaɛad yitlawwa min il-wagaɛ* he kept writhing with pain. - ava *mitlawwi*.

ل و ى ²

لوا، لواء *liwa* /n/ *[mil]* **1** /pl *liwaʔaat, ʔalwiya↑*/ brigade. **2** /pl *liwaʔaat*/ **2a** major-general or brigadier-general. **2b** *liwa baħri* rear-admiral.

ل ى ا ق

لياقة *liyaaqa^t* <T *yaka*> /n pl *-aat*/ collar (of a garment). *nuṣṣ^i lyaaqa* mandarin collar, half collar. - also *yaaqa*.

ل ى ب see ل ب ى ا: *liibi*

ل ى ج

لايج *laayig* /adj */ restless. *laqeet-u laayig fil-beet* I found him pacing about the house. *ɛeneen layga* shifty eyes.

ل ى ح

لاح *laaħ (i)* /vi/ to appear from a distance. *lamma l-fagr^i laaħ* when dawn broke. - vn *layaħaan*; ava *laayiħ*.

لائحة *layħa↑* /n pl *lawaayiħ*/ set of regulations. *layħit il-bariid* the post office regulations. *ɛuquuba ħasab il-lawaayiħ* a penalty according to the regulations.

ل ى د see ل و د: *laayid*

ل ى د و
ليدو *liidu* /n/ ludo (game).

ل ى س [1]
ليّس *layyis* /vt/ **1** to stop up or seal up (with mud). **2** *[slang]* to shut (s.o.'s mouth). *layyis-lu buqq-u* shut his trap for him! - vn *talyiis*; ava/pva *milayyis*.
اتليّس *ʔitlayyis* /vi/ **1** to be stopped up or sealed up (with mud). **2** *[slang]* to shut up or be made to shut up. *ʔitlayyis* shut your gob! - ava/iva *mitlayyis*.
متليّس *mitlayyis* /adj */ stupefied with hashish.

ل ى س [2]
ليس *laysa: laysa ʔilla* and no more, and that's that, as in *gineeh laysa ʔilla* one pound and not a penny more, *huwwa kiilu laysa ʔilla* it's a kilo (you'll be getting) and that's all.

ل ى ص ا
ليصا *liiṣa* /interj/ *hubb[i] liiṣa* heave-ho!

ل ى ط
ليطة *leeṭa* /n/ mire.
ليّط *layyaṭ* /vt/ to smear with. *layyaṭu l-ḥeeṭa ṭiin* they daubed the wall with mud. *layyaṭt[i] hduum-i buuya* I got my clothes smeared with paint. - vn *talyiiṭ*; ava/pva *milayyaṭ*.
اتليّط *ʔitlayyaṭ* /vi/ to be smeared. - iva *mitlayyaṭ*.

ل ى ف
ليف *liif* /coll n, pl *ʔalyaaf*/ fibre(s), palm fibre(s).
ليفة *liifa* /n pl *-aat*/ **1** tuft of palm fibres used as a brush. **2** bath sponge, loofah.
ليفى *liifi* /adj/ fibrous.
ليّف *layyif* **1** /vt/ to scrub with a *liifa* or a *luufa*. **2** /vi/ **2a** *[path]* to become cirrhotic. **2b** to become fibrous. - vn *talyiif*; ava/pva *milayyif*.
اتليّف *ʔitlayyif* /vi/ **1** to scrub oneself with a *liifa*. **2** to be scrubbed with a *liifa*. **3a** *[path]* to become cirrhotic. **3b** to become fibrous. - ava/iva *mitlayyif*.
تليّف *talayyuf* /n/ *[path]* cirrhosis.

ل ى ق [1]
لاق *laaq (i)* /vi/ to be suitable, be fitting, be apt. *bi-yliiq ɛaleek il-loon il-bunni* brown suits you. *taṣarrufaat miʃ layqa* improper behaviour. *yiliq-lu ʔinnu yiɛmil kida* it's only right and fitting that he should behave that way. *da ma-yliq-ʃ[i] minnak* you shouldn't do that kind of thing. - vn *layaqàan*; ava *laayiq*.
لياقة *liyaaqa[2]*, *liyaaqa* /n/ **1** suitability, appropriateness. *faabb[a] ɛandu lyaaqa qawi* a most eligible young man. **2** fitness. *tamariin liyaaqa badaniyya* physical fitness exercises.

ل ى ق [2]
ليقة *liiqa* /n pl *liyaq*/ pad of silk or cotton fibre placed in an inkwell to absorb and hold ink.

ل ى ق [3] see ل ى ا ق: *liyaaqa[1]*

ل ى ل
ليل *leel* /n/ night-time. *ʔid-dinya baqit leel* night came. *ṭuul il-leel* all night long. *tisɛa w-nuṣṣ[i] bil-leel* nine-thirty at night. *ʔimbaariḥ bil-leel* last night. ‖ *ʔibn[i] leel* burglar. - *ʔil-leel bi-ʔaxr-u [prov]* ≈ one can't tell how things will turn out till the end. - *ya leel ya ɛeen ya leel* traditional opening formula of a *mawwaal*. – /adjectivally/ *ʔiswid leel* pitch black.
ليلة *leela* /n pl *layaali, lelaat*/ **1** evening, night. *lelt-ak saɛiida* good evening. *leelit ʔimbaariḥ* last night. *ʔil-lelaa-di* tonight, this evening. *leelit il-xamiis (il-gumɛa* etc.) Wednesday (Thursday etc.) night. *fi-leela mil-layaali* one night. ‖ *ya leela beeḍa* exclamation of joy. - *layaali ḥamra* nights of sensual pleasure, orgiastic nights. - *leelit il-ɛiid* the eve of the feast. - *ʔil-leela k-kibiira* the last and climactic night of a *muulid*. **2** a gathering extending into the nocturnal hours, often with food and music and culminating in a *zikr*, open to the neighbourhood, and usually sponsored as a gesture of thanks to God for a specific deliverance (e.g., recovery from illness) or to gain religious merit. – *layaali* /pl n/ **3** opening section of a *mawwaal* improvised by the singer on the traditional formula *ya leel ya ɛeen ya leel*. ¶ *leelit ma* /conj/ (on) the night when. *leelit ma tqabilna* (on) the night we met.
ليلى *layli* /adj invar/ nocturnal. *ṭayaraan layli* a night flight.
ليلاتى *lelaati* /adv/ nightly, every night.
ليّلت *layyilit* /vi/ to turn to night. (*ʔid-dinya*) *layyilit ɛaleena* night overtook us. - ava *milayyila*.

ل ى م [1]
ليم *liim* /n/ pitch line (in marbles).

ل ى م [2] see ل ء م [2]: *laayim, ʔitlaayim*

ل ى ن

لان *laan (i)* /vi/ to become pliable, supple, flexible, soft or yielding. *bi-yraṭṭabu l-kittaan ʕaʃaan yiliin* they moisten the flax to make it pliant. *liin il-ʕaḍm* softening of the bones. *ʔulub-hum laanit* their hearts softened. ‖ *ʔis-sitt[i] lanit-lu* the woman yielded to his advances. - vn *liin, layanaan*; ava *laayin*.

لين *liin* /n/ **1** softness, yieldingness, gentleness. *ʔitʕaamil maʕaahum· bil-liin* treat them gently. **2** looseness of the bowels, mild diarrhoea.

ليّن *layyin[1]* /adj */ pliable, flexible, soft, yielding. *kursi layyin* a soft chair. *raagil layyin* (1) an easy-going man, a flexible man. (2) a spineless man. ‖ *sitt[i] layyina* a woman of easy virtue.

ليونة *liyuuna* or *luyuuna* /n/ pliancy, flexibility, softness, yieldingness. *ʔir-ruṣaaṣ fii liyuuna* lead is pliable.

ليّن *layyin[2]* /vt/ **1** to make pliable, supple or flexible, soften, cause to yield. *ʔil-mayya layyinit il-xaʃab* the water softened the wood. ‖ *layyin raas-* (or *dimaaɣ-*) to wear down the resistance of, persuade, as *ʔaʕadit tilayyin dimaaɣ-i bil-filuus marra w-bit-tahdiid marra* she kept on at me to change my mind, now offering money, now threatening. **2** to run in, break in (a car). - ava/pva *milayyin*.

ملّين *mulayyin* /n pl *-aat*/ laxative.

اتليّن *ʔitlayyin* /vi/ **1** to be made pliable, supple, flexible, soft or yielding. **2** to be run in, be broken in (of a car). - iva *mitlayyin*.

تليّن *talayyun* /n/ suppleness.

استلين *ʔistalyin* /vi/ **1** to consider (too) soft. **2** to select for softness. ‖ *ʔistalyinu ʔaxuu-hum wi-xadu kull[i] fluus-u* they realized that their brother was easy to fool so they took him for all his money. - ava *mistalyin*.

ل ى ه

ليه *leeh* **1** /interrog adv/ why? *leeh il-badla di* why this suit? *ʔinta waaqif kida leeh* why are you standing like that? *saʔal-ni ma-zurtu-huu-ʃ leeh* he asked me why you didn't visit him. **2** /conj/ why. *ʕirift[i] leeh zar-ni* I found out why he visited me.

ل ى ى [1]

ليّة *liyya* /n/ **1** /pl *-aat*/ tail of a sheep. **2** /no pl/ fat from the tail of a sheep.

ل ى ى [2] see ل و ى [1] : *layy*

م

م

م *mi-* contracted form of *min* (q.v.).

م ا

ما *ma*[1] particle occurring with certain prepositions and nouns to form phrasal conjunctions, as either a continuous or discontinuous unit. *baʕd*[i] *ma s-sibaaq ibtada* or *baʕd is-sibaaq ma btada* after the race began. - for phrasal conjunctions with *ma*, see under the respective preposition or noun; fused classical conjunctions (e.g., *mimma, lamma*) look up as headwords.

ما *ma-* **1** particle lending emphasis to a suggestion or invitation. *ma-tuqʕud* come on, sit down! do sit down! *ma-balaaf* come on, forget it! *ma-yismaʕ* so what if he hears! let him hear! **2a** /when occurring w a foll n or pron (or pron suff in the case of 3rd pers *ma-hu, ma-hi* and *ma-hum*)/ particle signalling expostulation. *ma-ɦna ʕarfiin kida* but we know that already! *ma-l-mafruuq ʔinnak tistanna* but you're supposed to wait! *ma-l-ʕiyaal ʔaɦbaab allaah* after all, children are God's loved ones. *ma-hu* (or *ma-huwwa*) *qaal kida* but that's what he said! **2b** /when occurring w foll 3rd pers pron or pron suff plus a n or pron (in the case of a foll 3rd pers pron, *ma-hu* only)/ particle signalling emphasis of expostulation. *ma-hu* (or *ma-huwwa*) *ʔiɦna ʕarfiin kida* but we know that very well already! *ma-hu* (or *ma-huwwa*) *l-mafruuq ʔinnak tistanna* but the point is that you're supposed to wait! *ma-hu* (or *ma-huwwa* or *ma-hi* or *ma-hiyya*) *l-ʕiyaal ʔaɦbaab allaah* after all, the fact is that children are God's loved ones. *ma-hu huwwa qaal kida* but that's really what he said! **3** /as a part of the discontinuous unit *ma-...-ʃ*/ negating particle. *ma-titkallim-ʃ* don't speak! *ma-ʕamalt*[a]*-haa-ʃ* I didn't do it. *ma-nii-ʃ kaddaab* I am not a liar. *siriir ma-ʕalehuu-ʃ martaba* a bed with no mattress on it. *ma-fii-ʃ* (1) there is not (any), there are not (any). (2) nothing, nought, as in *ɦilt-u ma-fii-ʃ* he has nothing to his name. (3) nought, none, blank (in such games as dominoes). - /occasionally, after an oath in a colloquial context, or in classicisms, without the second constituent/ *w-allaahi ma-na raakib* by God, I will not get on! *ma-yiqdar ʕal-qudra ʔilla rabb-i-na* only God is master of fate.

ما *maa, ma*[2] **1** /interrog pron/ what? *maa raʔy-ak baqa f-ʔinn*[i] *ʔana lissa ʃayf-u* so what do you say to the fact that I've just seen him? ‖*maà l-* (1) what's wrong with ...? what's the matter with ...? as in *maa lak* what's the matter with you? *maa l-rigl-ak* what's the matter with your leg? *maa lak bi-tqul-ha kida* now what makes you say it like that? (2) what has it to do with ...? *ʔana maa li* what business is it of mine? - *wi-maa lu* (1) so what? (2) that's O.K., that's fine. - *maa l-... wi-maa l-...* what has ... to do with ..., as in *maa lak wi-maa lil-walad* what concern of yours is the boy? (i.e. why don't you stop interfering with the boy?). *maa li ʔana w-maa lil-bint* (1) what have I got to do with the girl? (2) I have no longer any wish to be involved with the girl, I wash my hands of the girl. **2**↑ /rel pron/ that which. *maʕaak ma yisbit ʔinnak ʕuḍw* do you have anything to prove you're a member? **3**↑ /pron used in apposition to an indefinite n/ certain, particular. *ʔila ɦaddin maa* to a certain extent. *fi-makaanin maa* in a certain place. **4** /w foll el form as v/ particle indicating surprise or wonder. *ʔil-ɦubb*[i] *maa ʔaɦlaa* love is wonderful. *maa ʔarzal-ak* how cheeky you are!

¶ *maa ʕada* /prep/ except.

[1] م ا ء see also [1] م ى ى

ماء *maaʔ*[1]↑ /n/ water (occurring in common speech in set phrases, proverbs, riddles etc.). *maaʔ il-ward* rose-water.

مائى *maaʕi* /adj */ pertaining to water. *magaari maʕiyya* water channels.

م ا ء [2]
ماء *maaʔ*[2] onomatopoeia for the bleating of a sheep or goat. see further under م ء م ء

م ا د see م د ى: *maada*

م ا ذ ا see م ا ز ا

م ا ر
مارى *maari* <Syr> /n/ *[Chr]* title for a male saint. *maari girgis* Saint George.

م ا ر س
مارس *maaris*[1] <Fr *mars*> /n/ March.

م ا ز ا
ماذا *maaza: maaza wa-ʕilla* ... or else ...! *ʕawwil if-fahr*[1] *ʕaaxud il-filuus maaza w-ʕilla* on the first of the month I take the money or else ...!

م ا س
ماس *maas* <Fr *masse*> /n/ *[elec]* short-circuit.

م ا ش
ماشة *maaʃa* <P *mâsha*> /n pl *-aat*/ pair of fire tongs.

م ا ل see م و ل: *maal*[1], *maali, maliyya*

م ا م ا
ماما *maama* /n, constr *maamit-*/ **1** mummy, mother. ‖ *ya maama [children]* exclamation of fear. **2** affectionate form of address to young girls and, by women, to young boys.

م ا ن ا
مانا *maana: ḥaana w-maana* see *ḥaana*.

م ا ن ى
مانى *maani: kaani w-maani* see *kaani*.

م ا ه see م ه ى ى: *mahiyya*

م ا ى و
مايو *maayu* /n/ May.

م ء ل ت see also ء ل ت
اتمألت *ʔitmaʕlit* /vi/ to make fun (of s.o.). *dayman yitmaʕlitu ɛaleeha* they are always poking fun at her. -vn *maʕlata*; ava *mitmaʕlit*.

م ء ل س see also ء ل س
مألسة *maʕlasa* /n/ derision.
اتمألس *ʔitmaʕlis* /vi/ to enjoy disparaging or depreciating. *baṭṭal timaʕliis ɛala n-naas* stop laughing at people! -vn *timaʕliis*; ava *mitmaʕlis*.

م ء م ء see also م ا ء [2]
مأمأ *maʕmaʕ* /vi/ to bleat. -vn *maʕmaʕa*; ava *mimaʕmaʕ*.

م ء ن see م و ن: *muʕna, maʕuuna*

م ب ر [1] see ن ب ر [1]: *mambar, mimbar*

م ب ر [2] see م ن ب ا ر: *mimbaar*

م ب ل ى ا
موبيليا *mubilya* (also *nabulya*↓) <It *mobilia*> /n pl *-aat*/ furniture.

م ت ت [1]
متّ *matt*[1] *(i)* /vi/ to be or become related. *ma-bi-ymitt*[i]*-f lina b-ṣila* he is in no way related to us. -ava *maatit*.

م ت ت [2]
متّ *matt*[2] /n/ *[hort]* cord fortifying a graft.

م ت ر [1]
متر *mitr*[1] <Fr *mètre*> /n pl *ʕamtaar*/ **1** metre (unit of length). *ʕil-fustaan ɛayiz-lu talatt imtaar ɋumaaʃ* the dress will need three metres of cloth. **2** tape-measure, metre rule.
مترى *mitri* /adj/ metric.
متّر *mattar* /vt/ to measure by the metre. - vn *tamtiir*; ava *mimattar*.
اتمتّر *ʔitmattar* /vi/ to be measured by the metre. - iva *mitmattar*.

م ت ر [2] (م ت ر)
متر *mitr*[2] <Fr *maître*> /n/ title of, and form of address or reference to, a lawyer or head waiter.
متر *mitr*[3] /n pl *ʕamtaar*/ navigable canal (in the jargon of Nile boatmen).

م ت ر د
مترد *matrid* /n pl *mataarid*/ earthenware vessel similar

in shape to a *maguur* (see Pl.A, 8), but smaller.

م ت ر ل –
مترليوز *mitrilyooz* <Fr *mitrailleuse*> /n pl *-aat*/ machine-gun.

م ت ر و
مترو *mitru* <Fr *métro*> /n/ metropolitan electric train. *mitru l-ʕanfaaq* underground train system.

م ت ر ي س
متريس *matriis* <Fr *matrice*> /n pl *mataaris*/ *[tech]* matrix.

م ت ر ي –
متريول *matriyool* /n/ *[chem]* nitric acid.

م ت س ك ل
موتوسيكل *mutusikl* <Fr> /n pl *-aat*/ motor-cycle.

م ت ش
ماتش *matʃ* or *matʃ* <Engl> /n pl *-aat, -aat*/ match, game. *matʃ koora* football match.

م ت ع
متعة *mutʕa, mitʕa* /n pl *mutaʕ*/ enjoyment, pleasure.
متع *mitiʕ* /adj */ *[deris]* strong, tough, brawny.
أمتع *ʔamtaʕ* /el/ more/most enjoyable.
متاع *mataaʕ* /n pl *ʔamtiʕa*/ luggage.
متع *mattaʕ* /vt/ to give pleasure to, cause to rejoice. *ya rabb mattaʕ-na f-xilfit-na* O Lord, let us live to enjoy our children! - vn *tamtiiʕ*; ava/pva *mimattaʕ*.
اتمتّع *ʔitmattaʕ* /vi/ 1 to derive enjoyment. *laazim tiṣḥa badri ʕaʃaan titmattaʕ bi-hawa ṣ-ṣubḥ* you must wake up early so as to enjoy the morning breeze. 2 to be privileged. *bi-yitmattaʕ bi-ʔiʕfaaʔ gumruki* he enjoys customs exemption. - ava *mitmattaʕ*.
استمتع *ʔistamtaʕ* /vi/ to derive enjoyment. *ʔistamtaʕ bi-ḥayaat-u ʔaaxir istimtaaʕ* he enjoyed his life to the full. - vn *ʔistimtaaʕ*; ava *mistamtiʕ*.

م ت ل see م س ل : *ʔistamtil*

م ت ن
متانة *mataana* /n/ solidity, strength, durability. *gizam zamaan ʔaaxir mataana* in the old days shoes were really tough.
متين *matiin* 1 /adj pl *mutaan, mutana*/ solid, strong, durable. 2 /n/ Dependable One (epithet of God).

أمتن *ʔamtan* /el/ more/most solid, strong etc.
استمتن *ʔistamtin* /vt/ 1 consider strong or durable. 2 to select for strength or durability. - vn *ʔistimtaan*; ava *mistamtin*.

م ت و ر
متور، ماتور *mutoor, mutuur, matuur* <Fr *moteur*> /n pl *-aat, mawatiir*/ motor.

م ث ل see م س ل

م ث ن see [1] م س ن

م ج د
مجد *magd* /n pl *ʔamgaad*/ glory.
مجيد *magiid* /n/ Glorious One (epithet of God).
ماجد *maagid* /n/ Glorious One (epithet of God).
مجّد *maggid* /vt/ to glorify. *bi-nmaggid rabb-i-na* we glorify God. - vn *tamgiid*; ava/pva *mimaggid*.
اتمجّد *ʔitmaggid* /vi/ to be glorified. - iva *mitmaggid*.

م ج د ع see ج د ع : *magdaʕ, magdaʕa*

[1] م ج ر
مجر *magar* /n/ eighteen carat gold (goldsmiths' term).
المجر *ʔil-magar* /prop n/ Hungary.
مجرة *magara* /n pl *-aat*/ gold or golden disc (similar in size and often in design to a half-sovereign) used in cheap necklaces and bracelets.
مجرى *magari* 1 /adj */ Hungarian. ‖*(ʔid-diizil) il-magari* express train (Hungarian-made). 2 /n. */ a Hungarian. 3 /n, no pl/ the Hungarian language.

[2] م ج ر see م ج و ر : *maguur*

م ج ر م see also [1] ج ر م
اتمجرم *ʔitmagram* /vi/ to act or behave in a cruel ruthless way. - vn *magrama*; ava *mitmagram*.

م ج س ت –
ماجستير *majisteer* <Fr *magister*> /n pl *-aat*/ *[acad]* master's degree.

م ج م ج
مجمج *magmig* /vi/ to become soft, become wobbly. *ʔid-dimmil magmig* the boil softened up. ‖*kalaam mimagmig* empty words. - vn *magmaga*; ava *mimagmig*.
اتمجمج *ʔitmagmig* /vi/ to wobble. *ʔil-miḥallabiyya lissa ʕariyya b-titmagmig* the blancmange is still soft and

wobbly. *bi-timʃi titmagmig fi-baɛḍ-a-ha min it-tuxn* she's so fat that her whole body shakes when she walks. - ava *mitmagmig*.

م ج ن [1]
مجّانا *maggaanan* /adv/ gratis.
مجّاني *maggaani* /adj */ gratis. *taɛliim maggaani* free education. *bil-maggaani* for free, gratis.

م ج ن [2]
مجنة *mugana* <It *mogano*> /n/ mahogany.

م ج ن ص
مجنص *magnaṣ* /n/ very strong person.
مجانص *magaaniṣ* /pl n/ latissimus dorsi muscles. ‖*ya raagil ya magaaniṣ* hey, muscle-man!

م ج و ر
ماجور *maguur* /n pl *mawagiir*/ large earthenware bowl (for kneading etc., see Pl.A, 8). ‖*kafa ɛala l-xabar maguur* ≈ he kept the news under his hat.

م ج ي ر
مجير *majeer* <Fr *majeur*> /adj invar/ *[mus]* major. *sillim il-majeer* major scale.

م ح ح
محى *muḥḥi*↑*: ʃil-kiis il-muḥḥi* the yolk sac.

م ح ر see also ح و ر [1]
محّر *maḥḥar* /vt/ *[constr]* to smooth or level (plaster) with a *maḥaara*. - vn *tamḥiir*; ava/pva *mimaḥḥar*.
اتمحّر *ʃitmaḥḥar* /vi/ passive of *maḥḥar*. - iva *mitmaḥḥar*.

م ح ض
محض *maḥaḍ* (also *maḥaṭ*) *(a)* /vt/ *[abus]* to give birth to. *yilɛan ʃabu lli maḥaḍ-u* (God) curse his parentage!

م ح ط see م ح ض: *maḥaṭ*

م ح ك
تمحيك *tamḥiik* /vn/ **1** ingratiation, toadying. **2** using pretexts.
تمحيكة *tamḥiika* /pl *tamaḥiik*/ instance noun of *tamḥiik*.
اتمحّك *ʃitmaḥḥak* /vi/ **1** to ingratiate oneself (with s.o.) for ulterior motives. *ʃitmaḥḥakt*↑ *fil-mudiir ɛaʃaan ʃaṭlub ʃagaaza* I made up to the director in the hope of getting a holiday. **2** to use a pretext, pick (on s.th.) as an excuse for carrying out one's own intentions. *ʃitmaḥḥak fi-kilma w-ɛamal-lu dawʃa* he picked on a word (that was said) and used it to stir up a lot of fuss. - ava *mitmaḥḥak*.
استمحّك *ʃistimàḥḥak*↓ = *ʃitmaḥḥak*. - ava *mistimaḥḥak*.

م ح ل س
محلس *maḥlis* /vi/ to toady to, make up to. - vn *maḥlasa*; ava *mimaḥlis*.
اتمحلس *ʃitmaḥlis* /vi/ to speak or behave in an unctuous toadying way. *qaɛadit titmaḥlis ɛala ʃabuu-ha l-ɤaayit ma waafiq ɛala safar-ha* she kept on wheedling her father till he finally agreed to let her make the journey. - ava *mitmaḥlis*.

م ح ن
محن *muḥn* /n/ cunning born of affliction.
محنة *miḥna* /n/ hardship, distress, affliction. *dool' ɛayʃiin fi-miḥna min nahaar ʃabuu-hum ma saab if-fuvl* they've been having a hard life ever since their father stopped working.
ممحون *mamḥuun* /adj */ sexually experienced (especially of women). *quul lil-mara l-mamḥuuna di tiskut* tell that slut of a woman to shut up!
محّن *maḥḥan* /vt/ to torment with desire. *misik ruzam il-filuus quddaam qarayb-u w-qaɛad yimaḥḥan-hum ɛaleeha* he picked up the wads of money in front of his relatives and had them itching to get their hands on it. - vn *tamḥiin*; ava/pva *mimaḥḥan*.
اتمحّن *ʃitmaḥḥan* /vi/ to be or become tormented with desire. *qaɛdiin yitmaḥḥanu ɛala ʃaqqa ḥilwa* they are longing to get a nice flat. - ava/iva *mitmaḥḥan*.
امتحن *ʃimtaḥan* **1** /vt/ to examine, set (s.o.) an examination. **2** /vi/ to take an examination. *laazim yimtiḥin fil-ʃingiliizi* he has to take an examination in English. - vn *ʃimtiḥaan*; ava/pva *mimtiḥin*.
امتحان *ʃimtiḥaan* /n pl *-aat*/ examination.
استمحن *ʃistamḥan*↓ = *ʃimtaḥan*. - vn *ʃistimḥaan*; ava/pva *mistamḥan*.

م ح و see م ح ي: *maḥw*

م ح ي
محا *maḥa (i)* /vt/ to obliterate. *ʃimḥi l-mawḍuuɛ da min muxx-ak* erase that matter from your mind! *ḥa-nimḥii* we'll finish him off! - vn *maḥy, maḥw*↑, *maḥayaan*; ava *maaḥi*; pva *mamḥi*.
محو *maḥw* /vn/ ‖*maḥw il-ʃummiyya* eradication of illiteracy (among the adult population).
ماحي *maaḥi* /adj */ **1** useless, ineffectual (of a person).

ʂaḥb-ak da maaḥi maḥayaan that friend of yours is utterly useless! **2** penniless, poverty-stricken.
أمحى ʕamḥa /el/ more/most **ineffectual** (of a person).
امّحى ʔitmaḥa /vi/ to be obliterated. -iva *mitmiḥi*.

م خ خ
مخ *muxx* /n pl ʕamxaax, mixaax/ **brain**. *maṭʕam kibda w-muxx* a liver and brain restaurant. *faṭṭaḥ muxx-ak* (1) be alert! (2) you'd better give (him) a tip. ‖ *ʔin-naas doolat ʕamxaax* those people are **stupid**. -*kaan muxx-i ḥa-yṭiir* I was about to lose my mind!
مخّخ *maxxax, maxxix* **1** /vt/ to improvise, invent. **2** /vi/ *[deris]* to play the pundit. *ʠaaʕid yimaxxix wi-yxarraf min ɣeer ma yiʕraf ḥaaga* he keeps making pronouncements and rambling on without knowing anything (about the subject). -vn *tamxiix*; ava/pva *mimaxxax*.
امّخّخ ʔitmaxxax /vi/ to be improvised, be invented. -iva *mitmaxxax*.

م خ ط
مخاط *muxaaṭ* /n/ mucus, snot.
مخاطي *muxaaṭi* /adj/ slimy, snotty, mucous.
مخّط *maxxaṭ* /vi/ to produce mucilage, become slimy (of certain vegetables during preparation or cooking). -vn *tamxiiṭ*; ava *mimaxxaṭ*.
امّخّط ʔitmaxxaṭ↑ /vi/ to blow one's nose. -ava *mitmaxxaṭ*.

م خ ط ر
مخطرة *maxṭara* /n/ swaggering gait.
امّخطر ʔitmaxṭar /vi/ to swagger, strut. *xad dabbuura gdiida w-rigiʕ beet-u yitmaxṭar biiha* he got a new pip and went home to swagger about with it. -ava *mitmaxṭar*.

م خ و ل
مخول *maxwil* /vt/ to confuse, perplex. -vn *maxwala*; ava/pva *mimaxwil*.
امّخول ʔitmaxwil /vi/ to be or become perplexed. -ava/iva *mitmaxwil*.
استمخول ʔistimaxwil↓ = ʔitmaxwil. -ava *mistimaxwil*.

م د ا ح
مداح *madaaḥ: sadaaḥ madaaḥ* see *sadaaḥ*.

[1] م د ا م
مدام *madaam*[1] <Fr *madame*> /n pl *-aat*/ title of, and form of address or reference to, a (usually middle- or upper-class) married woman. *madaam samiira*. Mrs. Samira (Samira being her given name). *madaam darwiiʃ* Mrs. Darwish (Darwish being her husband's given or family name). ‖ *ʔil-madaam bitaʕt-i* my wife.

[2] م د ا م see also [1] د و م
مدام، مادام *madaam*[2] (also *ʕadaam*[2]↓) /conj/ since, so long as. *madaam miḥammad hina yibʠa laazim tizur-na* since Muhammad is here you must visit us. *madaam ʔintu giitu* since you have come. *madaam humma taʕbaniin ma-fii-ʃ lazma nruḥ-luhum* so long as they're ill, there's no point going to see them.

[1] م د ح
مدح *madaḥ (a)* /vt/ to praise. *ʔil-ʕariis da kull in-naas madaḥit-u* everyone has praised this suitor. -vn *madḥ, madaḥaan, madiiḥ*; ava *maadiḥ*; pva *mamduuḥ*.
مديح *madiiḥ* /n/ **1** eulogy. **2** songs in praise of God and the Prophet Muhammad.
مدّاح *maddaaḥ* /n */ singer of songs in praise of God and the Prophet Muhammad.
مدّح *maddaḥ* /vi/ to utter repeated or extravagant praises. *ʔil-maddaaḥ ʕammaal yimaddaḥ fin-nabi* the singer keeps praising the Prophet. ‖ *maddaḥ in-nabi* name your price! (said by a salesman to a buyer of, e.g., livestock or poultry). -vn *tamdiiḥ*; ava *mimaddaḥ*.

[2] م د ح see س د ا ح: *madaaḥ*

م د د
مدّ *madd*[1] *(i)* /vt/ **1** to extend, stretch out. *ʔil-minabbih ḍarab - madd*[i] *ʔiid-u sakkit-u* the alarm clock rang, he stretched out his hand and silenced it. ‖ *madd*[i] *ʔiid-u li-* (1) to assist, as in *madd*[i] *ʔiid-u liyya fi-waʠt iʃ-ʃidda* he helped me when times were hard (2) to ask for or accept bribes from, as in *ʔana lamma ʔamidd*[i] *ʔiid-i mafruuḍ m-amidd*[a]*-haa-ʃ li-waaḥid ʒayyak* when I ask for a bribe it should not be from a (poor) man like you. (3) to beg, as in *wala ymidd*[i] *ʔiid-u l-waaḥid* he doesn't beg from anyone. -*madd*[i] *ʔiid-u ʕala* (1) to steal, as in *ʕumr-i ma-maddeet ʔiid-i ʕala ḥagaat ɣeer-i* I've never stolen anyone else's things. (2) to hit, as in *ʔiza maddeet ʔiid-ak ʕalee ḥ-aḍrab-ak* if you lay a finger on him, I'll hit you. **2** to prolong, protract. *laazim timidd il-ʔiqaama* you have to (get permission to) extend the period of your residence. *rabb-i-na ymidd*[i] *(f-)ʕumr-ak* may God give you long life! **3**↑ to supply. *rusya maddit-na b-silaaḥ* Russia supplied us with arms. — /vi/ **4** to extend, creep (usually of plants). *ʔin-nabaat bi-ymidd*[a] *ʕas-suur* the plant climbs over the wall. ‖ *ʕuud madd* stake for plants to climb on. -*ʔil-ʕirʠ*[i]

ymidd[i] l-saabiɛ gidd [prov] ≈ like father like son. **5** to hasten one's stride. *maddeet li-ɣaayit ma ḥaṣṣalt-a-ha* I hurried until I caught up with her. -vn *madd, madadaan*; ava *maadid*; pva *mamduud*.

مدّ *madd[2]* /n/ **1** pull (of a tide, flood etc.). **2** drawing out of the voice over long vowels. *ḥuruuf (or ʕaṣwaat) il-madd* long vowels.

مدّة *madda[1]* /n pl *-aat*/ **1** instance noun of *madd[2]*. **2** *[ling]* diacrital mark over the letter *ʕalif* denoting hamza vocalized with long *aa (ʕaa)*.

مادّة *madda[2], maadda↑* /n pl *mawaadd, maddaat↓*/ **1a** substance, matter. *ʕil-mawaadd il-bitroliyya* petroleum products. **1b** material. *ʕil-ʕisṭuwanaat bi-ttittammin ḥasab il-madda l-musaggala ɛaleeha* the records are priced according to the material recorded on them. *madda xafiifa* light subject-matter. **2** school or university subject. **3a** place (usually a specially erected pavilion) where condolences are received at a funeral. **3b** mourning, period of mourning.

مادّى *maddi, maaddi* /adj */ **1** material. *daliil maddi* material evidence. **2** materialistic. *raagil maddi* a materialistic man. — /n */ **3** materialist.

مادّيّة *maddiyya* /n/ materialism.

ممدود *mamduud* /adj/ *[ling]* followed by a long vowel (of a consonant).

مدّة *mudda* /n pl *-aat, mudad*/ **1** period (of time). *min muddit sana* a year ago. *baqaa-li mudda ma-ʃuft[a]-haa-ʃ* it's been a while since I saw her. ‖ *kull[i] mudda* every so often. **2** *[slang]* prison term, stretch. **3** *[comm]* unit of three minutes used for measuring long-distance telephone calls.

مدّة *midda* /n/ pus.

مدد *madad* **1** /n/ supply, supplies. **2** /interj/ *[Isl]* aid! (cry for aid to God or saints).

مديد *madiid↑* /adj/ extended, prolonged. *ɛumr[i] madiid* a long life.

مدّاد *maddaad* /n pl *-aat*/ **1** creeping plant. **2** *[mech]* connecting arm.

امتدّ *ʕitmadd* /vi/ to be or become extended or stretched out. -iva *mitmadd*.

مدّد *maddid* /vt/ **1** to stretch out, lay out. *maddid nafs-ak* stretch out, lie down. **2** to extend, prolong. — /vi/ **3** to suppurate, discharge pus. -vn *tamdiid*; ava/pva *mimaddid*.

تمديدة *tamdiida* /pl *-aat*/ instance noun of *tamdiid*.

امتدّد *ʕitmaddid* /vi/ **1** to be stretched out. **2** to be extended, be prolonged. **3** to stretch oneself out, lie down. *ʕana raayiḥ ʕatmaddid fis-siriir* I'm going to stretch out on the bed. - ava/iva *mitmaddid*.

أمدّ *ʕamadd↑* /vt/ to supply. - vn *ʕimdaad*; ava *mimidd*.

إمداد *ʕimdaad* /n pl *-aat*/ *[mil]* supply.

م د ر see د ر ى[3]: *midra*

م د غ see ن د غ: *madaɣ, madɣa, ʕitmadaɣ*

م د ل ل see م د ى ل: *mudill*

م د ل ى

مدلية *midalya* <It *medaglia*> /n pl *-aat*/ medallion.

م د م see م د ا م: *madaam*

م د م و ز

مداموازيل *madmiwazeel, madamwazeel* <Fr *mademoiselle*> /n pl *-aat*/ title of and form of address or reference to, a young unmarried lady. -also *mazmazeel, mazmazeeh*.

م د ن[1]

مدنى *madani* /adj */ **1** civil. *ʕil-maḥaakim il-madaniyya* the civil courts. **2** civilian. *libs[i] madani* civilian dress. *laabis madani* wearing civilian clothes. — /n */ **3** civilian.

مدنيّة *madaniyya↑* /n/ civilization, civilized world. *labsiin quṣayyar - di madaniyya* wearing short skirts - is that (a sign of) civilization?!

مدينة *madiina* /n pl *mudun*/ city. *maglis madiina* city council.

مدّن *maddin* /vt/ to civilize. -vn *tamdiin*; ava/pva *mimaddin*.

امتدّن *ʕitmaddin* /vi/ to be or become civilized. -vn *tamaddun* (also *tamadyun*); ava/iva *mitmaddin*.

م د ن[2] see ء ز ن[1]: *madna*

م د ن[3] see م ى د: *midaan*

م د ى

مدى *mada* /n/ **1** extent, degree, measure. *ɛala mada ʕusbuɛeen* for two weeks, throughout two weeks. **2** period of time. *ɛala ṭuul il-mada mumkin yiɣayyar raʕy-u* with the passage of time he may change his mind.

مادى *maada: kull[i] maada* (1) with the passage of time. *kull[i] maada wiṣ-ṣudaaɛ bi-yziid* the headache gets worse as time goes by. (2) every once in a while. *kull[i] maada ɛala ma yidfaɛ* he takes his time before he pays up. *kull[i] maada w-maada ɛala ma yiigi* he comes very rarely.

م د ى ل
موديل *mudeel* (also *mudill*) <Fr *modèle*> /n pl *mudillaat*/ **1** fashion, style, model. *mudillaat ir-rabiiʕ* spring fashions. *ʕarabiyya ʃaaxir mudeel* a car of the latest model. **2** fashion model, mannequin.

م ر ء
المرء *ʃil-marʃ* /n/ a person, one. *yoom l-imtiḥaan yukram il-marʃ[i] ʃaw yuhaan [prov]* (on examination day one is either honoured or humiliated) ≈ it is through trial that every man's worth is discovered.
مره *mara* /n in absol state only/ **1** *[derog]* **1a** woman. *ʃinti ya mara* hey you, woman! ‖ *ya mara* you weakling! you spineless creature! (insult to a man). - *ʃibn[i] mara* (cowardly, unreliable) bastard. **1b** wife. *ʃil-mara btaʕt-u* ≈ his old woman. **2**↓ woman (as opposed to man). *ʃil-mara ma-tiwris-ʃ[i] ʠadd ir-raagil* a woman does not inherit as much as a man. **3** a real woman, a feminine female.
مرأة *marʃa*↑ /n/ **1** woman, wife. **2** womankind. *ḥuʠuuʠ il-marʃa* women's rights.
مرات *miraat* /fem n, in constr only/ wife of. *miraat-i* my wife. *miraat id-duktuur* the doctor's wife. *miraat ʃabuu* his stepmother.
مروءة *maruuʃa*↓, *muruuʃa* /n/ helpfulness, generosity, gallantry.
مروّة *miriwwa* /n/ stamina, strength.

م ر ت
مرتة *murta* /n/ milk solids left after clarifying butter (by a process which involves adding salt to the butter and boiling it at length; the brown salty milk solids are eaten as a delicacy).

م ر ت د -
مرتديلا *murtadella* <It> /n/ mortadella sausage.

م ر ت ز م
مورتزم *maratizm*↓ or *muratizm*↓ (also *muraṭizm*↓) <Engl> /n/ rheumatism. - also *rumatizm, marmatism.*

م ر ت ى ز
مرتيز *martiiz* /n/ hammer (of a piano).

[1] م ر ج
مرجان *murgaan, margaan* /n/ **1** coral. **2** sea bream. **3** a Nile fish (Barilius nilotica, Barilius loati).
مرجانى *murgaani, margaani* /adj/ pertaining to coral.

[2] م ر ج
مرج *marag: harag wi-marag* turmoil, chaos.

م ر ج ح
مرجح *margaḥ* /vt/ **1** to swing. *ʠaaʕid wi-bi-ymargaḥ rigl-u* he's sitting swinging his leg. *kalaam mimargaḥ* indecisive talk. **2** to push (s.o.) on a swing, merry-go-round or seesaw. - vn *margaḥa*; ava *mimargaḥ*.
مرجيحة *murgeeḥa* /n pl *maragiiḥ*/ **1** swing. **2** merry-go-round. **3** seesaw.
اترجح *ʃitmargaḥ* /vi/ **1** to swing or be swung. **2** to vacillate. - ava/iva *mitmargaḥ*.

م ر ج ل see also [1] ر ج ل
مرجل *margil* /vt/ to make a man of (s.o.). *kull-a-ha yomeen maʕaana wi-nmargil-u* in just a few days we'll make a man out of him. - vn *margala*; ava/pva *mimargil, mimargal.*
مرجلة *margala* /n/ manly behaviour.
اترجل *ʃitmargil* /vi/ **1** to behave in a manly way. **2** to be made a man of. - ava/iva *mitmargil.*

م ر ح
مرح *maraḥ* /n/ gaiety, cheerfulness.
مرح *mariḥ* /adj */ happy, cheerful.
مرّح *marraḥ* /vi/ to stretch out, relax. *ʠaaʕid mimarraḥ ʕak-kanaba* reclining on the sofa. - vn *tamriiḥ*; ava *mimarraḥ.*

م ر خ
المرّيخ *ʃil-marriix* /prop n/ (the planet) Mars.

[1] م ر د
ماردmaarid /n pl *marada*/ giant.
اتمرّد *ʃitmarrad* /vi/ to rebel. - vn *tamarrud*↑; ava *mitmarrad.*
متمرّد *mutamarrid*↑ /n */ rebel.

[2] م ر د see [1] و ر د : *muráda, murda*

م ر د غ
مردغ *mardaɣ* /vt/ to roll in the dirt. - also *marraɣ, marmaɣ*. - vn *mardaɣa*; ava/pva *mimardaɣ*.
اتمردغ *ʃitmardaɣ* /vi/ to roll, or be rolled, in the dirt. - also *ʃitmarraɣ, ʃitmarmaɣ*. - ava/iva *mitmarmaɣ*.

[1] م ر ر
مرّ *marr (u)* /vi/ **1** to elapse, go by, pass. *ʃil-ʃayyaam bi-tmurr* the days go by. *li-ḥadd[i] ma tmurr il-ʃazma*

until the crisis is over. **2** to pass, run, flow, go. *ʔil-mayya bi-tmurr^{i} f-ʿaʿr il-xaṭṭ* the water flows along the bottom of the furrow. *ʔil-musmaar bi-ymurr^{i} fii min id-daaxil* the nail goes through it from the inside. *ʔil-ʿarabiyyaat bi-tmurr^{i} min taḥt ik-kubri* the cars pass under the bridge. **3** to take place. *ʔil-ʿamaliyya di bi-tmurr^{i} ṭabiiʿi giddan fi-maṣr* this kind of thing passes without comment in Egypt. - vn *marr, mararaan, muruur*; ava *maarir*.

¶ *marr^{a} ʿala* (1) to pass by with a brief stop, as in *b-amurr^{a} ʿalee kull^{i} yomeen* I call in on him every two days, *marreet ʿala sayyid-na l-ḥuseen* I dropped by the Hussein mosque. (2) to check, inspect, as in *ʔig-garraaḥ bi-ymurr^{a} ʿal-ʿayyaniin* the surgeon makes the rounds of the patients, *murr^{a} ʿalee bil-ʿalam il-ʔaḥmar ʿabl^{i} ma yruuḥ il-maṭbaʿa* check it over (marking) with a red pencil before it goes to the press. (3) to come to the attention of, as in *ma-marrit-f^{i} ʿaleek ik-kilmaa-di* haven't you come across this word? - *marr^{i} bi-* (1) to undergo, as in *fii maraaḥil bi-tmurr^{i} biiha* it goes through several stages, *ʔiḥna marreena b-nafs il-mafaakil* we have suffered from the same problems. (2) to make a brief stop at (a place) in passing, as in *ʔana marreet bi-bariis fi-ṭariʿ-i l-landan* I stopped off at Paris on my way to London.

مرّة *marra* /n pl *-aat*/ instance, time. *talat marraat* three times. *nizilt^{i} marra wi-tneen wi-talaata* I went down once, and then a second and third time. *kull^{i} waaḥid yifuuṭ marra* each one shoots once. *(fi-)marra kunt^{i} maʿzuum maʿa mraat-i* once I was invited with my wife. *misiir-i f-marra ʔaṣṭaad-ak ya ʿirra* I'm bound to get you sometime, you scoundrel! ‖ *marraat* (1) many times, time and again. (2) sometimes, occasionally. - *marra waḥda* (1) at one and the same time, simultaneously, as in *bi-nṣubb is-saʿf^{i} wil-kamaraat marra waḥda* we lay the roof and the girders at one go. (2) all at once, as in *kaan faʿiir wi-marra waḥda baʿa ɣani* he was poor and suddenly he became rich. - *marra ... wi-marra* or *marraat ... marraat* at times ... at other times, as in *marra lik wi-marra ʿaleek* ≈ you can't win them all. - *bil-marra* (1) at the same time (as s.th. else), as in *madaam ʔinta naazil is-suuʿ hat-li kabriit bil-marra* since you're going shopping, get me some matches while you're at it, *ma-naaxud taks^{i} wi-nwaṣṣal-u bil-marra* let's take a taxi and drop him off on the way. (2) /in neg contexts/ (not) at all, as in *ʔiḥlif ma-tifrab (sagaayir) bil-marra* swear you'll never smoke! *mif ʿaawiz ʔafuuf-ak hina bil-marra* I don't want to see you here at all!

مرور *muruur* /n/ traffic. *ʿalam il-muruur* the Traffic Department. *maṣr^{i} muruur* Cairo transit (post office).

ممرّ *mamarr* /n pl *-aat*/ **1** passageway, corridor. **2** path.

مرّر *marrar^{1}* /vt/ to cause to pass. - vn *tamriir*; ava/pva *mimarrar*.

تمريرة *tamriira* /n pl *-aat*/ a pass (in soccer, hockey etc.).

استمرّ *ʔistamarr* /vi/ to continue. *bi-nistamirr^{i} fin-naʿaawa l-yadawiyya l-muddit ʃahreen* we continue hand-picking for two months. *ḥa-yistamirr^{i} fil-liʿba lin-nihaaya* he will stay on in the game till the end. - vn *ʔistimraar*; ava *mustamirr*.

استمرار *ʔistimraar* /n/ continuousness, continuation. *bi-stimraar* continuously.

استمرارى *ʔistimraari* /adj/ continuous.

م ر ر 2

مرّ *murr* **1** /adj/ bitter, galling. *ʿahwa murra* sugarless coffee. *ʿiʃt-i maʿaahum murra* my life with them is bitter. ‖ *ʔeef ramaa-k ʿal-murr.* - *ʿaal ʔilli ʔamarr^{i} minnu [prov]* ≈ one is sometimes forced to choose the lesser of two evils. **2** /n/ myrrh.

مرّة *murra* /n/ hardship. *ʔil-ḥilwa wil-murra* ≈ good and bad, thick and thin. *waʿfa gamb^{i} goz-ha fil-ḥilwa wil-murra* she stands by her husband through thick and thin.

مرارة *mararaan* /n/ bitterness.

أمرّ *ʔamarr* /el/ more/most bitter, more/most galling.

مرار *maraar* /n/ bitter suffering.

مرارة *maraara* /n/ **1** bitterness, gall. *b-aḥiss^{i} bin-nadam wi-bil-maraara* I feel regret and bitterness. **2** gall bladder. ‖ *marart-u dayyaʿa* he is short-tempered. - *di ḥaaga tifʿaʿ il-maraara* this is enough to make you blow a gasket!

مرير *mariir^{i}* /adj/ bitter, galling.

مرّر *marrar^{2}* /vi/ to become bitter or galling. *ʔil-ʔakl^{i} marrar* the food became bitter. *ʔil-ḥikaaya marrarit ʿawi* the affair went from bad to worse. - ava *mimarrar*.

استمرّ *ʔistamrar* /vt/ to consider (too) bitter. *kunt^{i} fil-ʔawwil b-astamrar il-ʿahwa s-saada* at first I used to find sugarless coffee too bitter. - ava *mistamrar*.

م ر ز

ميرز *mirz* /coll n/ pieces of mother-of-pearl cut to shape for use in inlay.

م ر س 1

اتمرّس *ʔitmarras* /vi/ to become thoroughly familiar (with s.th.), become an adept. *da mitmarras bis-suuʿ tamaam* he knows the market inside out. - vn *tamarrus*; ava *mitmarras*.

مارس *maaris*[2] /vt/ **1** to practise, engage in. *mumkin iṭ-ṭalaba ymarsu koora ṭayra* the students can take up volley-ball. *bi-ymaaris ig-gins* he engages in sexual activity. **2** to perform, execute. *bi-ymaaris masʕuliyyaat-u* he carries out his responsibilities. - vn *mumarsa*; ava *mimaaris*.

ممارسة *mumarsa* /n pl *-aat*/ sale by private agreement.

ممارس *mumaaris* /n */: *mumaaris ɛaamm* general practitioner.

اتمارس *ʕitmaaris* /vi/ **1** to be practised, be engaged in. **2** to be performed, be executed. - iva *mitmaaris*.

[2] م ر س

مرس *mars* <P *mars*> /n pl *-aat*/ a round in backgammon in which the winner removes all his chips from the board before his opponent removes any; a gammon (cf. *ʕuyun*).

[3] م ر س see م ا ر س : *maaris*[1]

[4] م ر س see م ر ي س : *ʕil-miriisi*

[5] م ر س see و ر س : *miraas*

م ر ْس ت –

مرستان *murustaan* <P *mâristân*> /n/ lunatic asylum, bedlam. ‖*ɛamaluu-li murustaan fi-dmaaɣ-i* they caused a babel in my brain.

م ر س ح see س ر ح : *marsaḥ*

م ر س و ن

مرسون *marasoon* <Engl> /n/ *[athl]* marathon.

م ر س ي

مرسي *mirsii* <Fr *merci*> /interj/ thank you! *mirsii ɋawi* thank you very much!

م ر س ي –

مرسيدس *marseedis* or *marsiidis* <prop n *Mercedes*> /n/ Mercedes car. - also *marfeedis, marfiidis*.

م ر س ي س

مرسيس *marsiis: xarsiis marsiis* see *xarsiis*.

م ر ش

مرش *marf* <Fr *marche*> /n pl *-aat*/ **1** march. *ʕiṭ-ṭabla di ʕilli b-yiṭabbilu ɛaleeha l-marfaat* this drum is the one on which they beat out the marches. **2** *[auto]* **2a** ignition, starter. **2b** *marf aryeer* reverse, back up. *ʕiɛmil marf aryeer* back up!

م ر ش ي –

مرشيدس *marfeedis* or *marfiidis* <prop n *Mercedes*> /n/ Mercedes car. - also *marseedis, marsiidis*.

م ر ض

مرض *miriḍ (a)* /vi/ to fall ill, become sick. - vn *maraḍ*; ava *marḍaan*.

مرض *maraḍ*[1] *(i)* /vt/ **1** to cause to be ill. *huwwa l-ʕakl illi maraḍ-ni* it was the food which made me ill. **2** to upset, annoy. - vn *maraḍaan*; ava *maariḍ*; pva *mamruuḍ*.

مرض *maraḍ*[2] /n pl *ʕamraaḍ*/ illness, disease. *ʕamraaḍ nisa* gynaecological diseases or disorders. ‖*maraḍ il-kalb* rabies. - *ʕil-ɣaraḍ maraḍ [prov]* (prejudice is a disease) ≈ you cannot judge things properly if your interest is in the way.

مرضي *maraḍi* /adj/ pertaining to illness. *ʕagaaza maraḍiyya* sick-leave.

مريض *mariiḍ* /pl *marḍa, muraḍa*↓/ **1** /adj/ ill, sick. **2** /n/ patient.

اتمرض *ʕitmaraḍ* /vi/ to be or become depressed or exasperated. *ʕana tmaraḍt-i miʃ-fuɣlaa-di* I'm fed up with this job. - ava/iva *mitmiriḍ*.

مرّض *marraḍ* /vt/ to nurse (the sick). - vn *tamriiḍ*; ava *mimarraḍ*.

ممرّض *mumarriḍ* /n */ male professional nurse.

ممرّضة *mumarriḍa* /n pl *-aat*/ female professional nurse.

اتمرّض *ʕitmarraḍ* /vi/ to be nursed (medically). - iva *mitmarraḍ*.

اتمارض *ʕitmaariḍ* /vi/ to feign illness. *bi-yitmaariḍ ɛafaan yaaxud ʕagaaza* he pretends to be ill in order to get leave of absence. - vn *tamaaruḍ*; ava *mitmaariḍ, mutamaariḍ*.

م ر ط ز م see م ر ت ز م : *muraṭizm*

م ر ع

مرع *maraɛ*↓ *(a)* /vt/ **1** to rip, tear up. **2** to inflate the pride of. — /vi/ **3** to boast extravagantly, tell fishing stories. - vn *marɛ*; ava *maariɛ*; pva *mamruuɛ*.

مرعة *marɛa*↓ instance noun of *marɛ*.

مرّاع *marraaɛ*↓ /adj */ boastful.

اتمرع *ʕitmaraɛ*↓ /vi/ to swell with pride. - ava *mitmiriɛ*.

مرّع *marraɛ*↓ /vt/ to rip, tear up. *lamma gaa-lu ṣ-ṣaraɛ marraɛ hiduum-u* when he had a fit of epilepsy he tore his clothes. - vn *tamriiɛ*; ava/pva *mimarraɛ*.

اتمرّع ʔitmarraʕ↓ /vi/ passive of *marraʕ*. - iva *mitmarraʕ*.

م ر غ

مرغ *maraɣ (u)* **1** /vt/ to roll (s.th. or s.o.) in the dust. **2** /vi/ to delay, tarry, take a long time. *ma-tumruɣ-fi fis-sikka* don't dilly-dally on the way. **3** /vi/ to talk nonsense. - vn *maraɣaan, maraɣ*; ava *maariɣ*; pva *mamruuɣ*.

مرغ *miriɣ* /adj */ easy-going, leisurely and slow.

أمرغ ʔamraɣ /el/ more/most leisurely or slow.

مرّاغ *marraaɣ* /adj */ **1** = *miriɣ*. **2** over-talkative.

اترغ ʔitmaraɣ /vi/ to be rolled in the dust. - iva *mitmiriɣ*.

مرّغ *marraɣ* /vt/ to roll successively on the ground or in the dust. - also *mardaɣ, marmaɣ*. - vn *tamriiɣ*; ava/pva *mimarraɣ*.

اتمرّغ ʔitmarraɣ /vi/ to roll or be rolled successively on the ground or in the dust. ‖ *ʔin faat-ak il-miiri ʔitmarraɣ fi-traab-u [prov]* ≈ a government job, no matter how base, is better than any other job. - also *ʔitmardaɣ, ʔitmarmaɣ*. - ava/iva *mitmarraɣ*.

م ر ف ى ن

مورفين *murfiin* <Fr> /n/ morphine.

م ر ق [1]

مرق *miriq* /adj */ **1** runny, liquid (of food). **2** slow, confused (of people).

مرق *maraq* /n/ stock, bouillon, broth. ‖ *baqa ʕaraq-i maraq-i* ≈ I'm burning with embarrassment.

مرقة *maraqa* = *maraq*.

اترق ʔitmaraq /vi/ to become moist or liquid (of food). - ava *mitmiriq*.

مرّق *marraq* /vt/ to make (food) moist or liquid. - vn *tamriiq*; ava/pva *mimarraq*.

م ر ق [2]

مرق *maraq↓ (u)* /vi/ to go at a fast pace. *ʔimruq min hina* push off! - vn *maraqaan*; ava *maariq*.

مرّق *marraq↓* /vt/ to let (s.o. or s.th.) pass. - vn *tamriiq*; ava *mimarraq*.

م ر ق ص

مرقص *murquṣ* /prop n/ *[Chr]* male given name. *maari murquṣ* St. Mark.

مرقصى *murquṣi* /adj/ pertaining to St. Mark. *ʕamalu l-faraḥ fi(l-kiniisa) l-murquṣiyya* they had the wedding in St. Mark's Church.

م ر ق ع

مرقع *marqaʕ* /vt/ to make (s.o.) frivolous or flighty. - vn *marqaʕa*; ava *mimarqaʕ*.

اترقع ʔitmarqaʕ /vi/ to dally, tarry, potter. *ʕayzaa-li raagil la yitmarqaʕ wala yiskar* I want a man who won't dilly-dally around or get drunk. - vn *marqaʕa*; ava *mitmarqaʕ*.

(م ر ك)

مرك *mark* <Fr *marque*> /n pl *-aat, -aat*/ tailor's marker.

مرك *mark* <Fr *marque*> /n pl *-aat*/ metal or plastic token (purchased and then given up in exchange for, e.g., drinks in a snack bar).

مركة *marka* = *mark*.

مركة *marka*[1] = *mark*. ‖ *walad marka* a lad who's on-the-ball.

ماركة *marka*[2] <It *marca*> /n pl *-aat*/ brand, make, trade name.

م ر ك ز see also ر ك ز

مركز *markiz* /vt/ **1** to determine the centre. *markiz id-dayra* he determined the centre of the circle. **2** to put into a central position, centralize. *markiz il-koora* centre the ball! *markiz wasaaʔil il-ʔintaag fi-manṭiqa waḥda* he centralized the means of production in one area. - vn *markaza*; ava/pva *mimarkiz*.

اتمركز ʔitmarkiz /vi/ passive of *markiz*. - iva *mitmarkiz*.

م ر ك ز –

مركزيت *markazitt* <Fr> /n/ marquisette (fabric).

م ر ك س

مركسى *markisi* <prop n *Marx*> **1** /adj */ Marxist. **2** /n */ a Marxist.

مركسيّة *markisiyya* /n/ Marxism.

مركس *markis* /vt/ to make (s.o. or s.th.) Marxist or (loosely) leftist. - vn *markasa*; ava/pva *mimarkis*.

اتمركس ʔitmarkis /vi/ to be made Marxist or (loosely) leftist. - iva *mitmarkis*.

م ر ك و –

مركونى *markooni* <prop n *Marconi*> /n/ *[naut]* wireless operator.

م ر ل ا ى see ء م ر ا: *miralaay*

م ر م ت –

مرمتزم *marmatizm↓* <Engl> /n/ rheumatism. - also *maratizm, muratizm, rumatizm*.

م ر م ر

مرمر *marmar* /n/ alabaster, translucent marble.

م ر م ط
مرمط *marmaṭ* /vt/ to mishandle, bear hard on, victimize. *marmaṭuu-ni ʠuddaam illi yiswa wi-lli ma-yiswaa-ʃ* they treated me like dirt in front of everyone. *marmaṭit-u fil-maḥaakim* she dragged him through the courts. - vn *marmaṭa*; ava/pva *mimarmaṭ*.
اتمرمط *ʔitmarmaṭ* /vi/ to be given a hard time, be victimized. *ʔitmarmaṭ fi-ḥayaat-u* he's had a wretched life. - iva *mitmarmaṭ*.

م ر م ط –
مرمطون *marmaṭoon* <Fr *marmiton*> /n pl *-aat*/ drudge, scullion.

م ر م غ
مرمغ *marmaɣ* /vt/ to roll (s.o. or s.th.) in the dirt. - also *mardaɣ, marraɣ*. - vn *marmaɣa*; ava/pva *mimarmaɣ*.
اترمغ *ʔitmarmaɣ* /vi/ to roll or be rolled in the dirt. - also *ʔitmardaɣ, ʔitmarraɣ*. - ava/iva *mitmarmaɣ*.

م ر ن [1]
مرن *marin, mirin* /adj */ pliant, flexible.
مران *miraan*↑ /n/ practice. *ʔil-xibra wil-miraan* experience and practice.
مرونة *muruuna* /n/ pliancy, flexibility.
مرّن *marran* /vt/ to cause to practise, train. *marranit-ni ʃis-sibaaḥa* she gave me swimming practice. *ʕallim-ni w-marran-ni f-fuɣl-u* he taught me and trained me in his work. ‖*fatra taḥt it-tamriin* probationary training period. - vn *tamriin*; ava/pva *mimarran*.
تمرين *tamriin* /n pl *-aat, tamariin*/ exercise. *tamrinaat riyaḍiyya* (1) physical exercises. (2) mathematical exercises.
اتمرّن *ʔitmarran* /vi/ **1** to be trained, **2** to practise, do exercises. *bi-yitmarran ʕal-biyaanu* he's practising at the piano. - ava/iva *mitmarran*.

م ر ن [2] see م ر ى ن : *mariina*

م ر و see م ر ء : *miriwwa*

م ر ى see م ر ء ى : *miraaya*

م ر ى س [1] see also ر ء س
مريسة *maryasa* /n/ overbearing behaviour, bossiness.
اتمريس *ʔitmaryis* /vi/ to act the boss, throw one's weight around. - ava *mitmaryis*.

م ر ى س [2]
المريسى *ʔil-miriisi* <Copt> /n/ south wind (in the jargon of Nile boatmen).

م ر ى ن
مرينة *mariina* /n pl *maraayin*/ *[constr]* standard-size wooden beam four metres by ten centimetres by ten centimetres.

م ر ى ن –
مريانوس *maryanoos* /n/ *[obsol]* kind of thick cotton material.

م ز ج
مزج *mazag*↑ *(i)* /vt/ **1** to mix, blend. **2** to put in a good mood. - vn *mazg, mazagaan*; ava *maazig*; pva *mamzuug*.
مزاج *mazaag* /n pl *ʔamziga, mazagaat*/ **1** humour, mood, fancy. *ʕala mazaag-ak* as you like. *ʕakkar mazaag-i* it put me in a bad humour. *ma-lii-ʃ* (or *ma-ʕandii-ʃ*) *mazaag* I don't feel like it, I'm not in the mood. *bi-mazaag* eagerly and with pleasure. ‖*bi-mazaag-(u)* (1) whenever or however (one) pleases, as in *b-aftaxal bi-mazaag-i* I work to suit myself. (2) of (one's) own free will, as in *ʔil-mudiir bi-yakul-ha b-mazaag-u* the director knowingly allows himself to be duped. - *daxal mazaag* ... to be pleasing to ..., as in *ʔil-bitt*[i] *daxla mazaag-i ʠawi* the girl is just my cup of tea, *ʠablit il-mudiir wi-daxalit mazaag-u* she met the director and gained his approval. - *xad mazaag-(u)* to have (one's) fill, as in *lamma ʃaaxud mazaag-i min il-ʕarabiyya di ḫ-aftiri ɣer-ha* when I've had enough of this car, I'll buy another. - *ṣaaḥib mazaag* a man fond of good living. **2** object of one's fancy, object of pleasure. *da mazaag ʕandu* it gives him pleasure. **3** *ʔil-mazaag* hashish. ‖*mazaag ʕaali* high quality of hashish. - *ʔibn*[i] *mazaag* hashish-smoker.
مزيج *maziig* /n/ medical preparation, mixture.
اتمزج *ʔitmazag*↑ /vi/ passive of *mazag*. - iva *mitmizig*.
مزّج *mazzig* /vt and vi/ to please, gratify. - vn *tamziig*; ava/pva *mimazzig*.
اتمزّج *ʔitmazzig* /vi/ to be or become pleased or gratified. - ava/iva *mitmazzig*.
مازج *maazig* /vt/ to humour, gratify the fancy of (s.o.). *ʠaʕadt amazig-ha l-ɣaayit ma riḍyit* I kept humouring her until she agreed. - vn *mimazga*; ava/pva *mimaazig*.
اتمازج *ʔitmaazig* /vi/ **1** to be humoured, have one's fancy gratified. **2** to amuse oneself. - ava/iva *mitmaazig*.

م ز ر ط
اتمزرط *ʔitmazraṭ* /vi/ *[abus]* to put on airs, shoot a line. - vn *mazraṭa*; ava *mimazraṭ, mitmazraṭ*.

م ز ز [1]
مزّ *mazz*[1] *(i)* /vt/ to card (cotton, wool etc.). - vn *mazz*;

ava *maaziz*; pva *mamzuuz*.
مزّة *mazza*[1] /pl *-aat*/ instance noun of *mazz*. *mazzu ʂ-ʂuuf mazza ħilwa* they gave the wool a good carding.
اتمزّز *ʔitmazz* /vi/ to be carded (of cotton, wool etc.). - iva *mitmazz*.

[2] م ز ز
مزز *miziz* /adj/ sour. *ʔil-lamunaata mizza* the lemonade is sour.
مززان *mazazaan* /n/ sourness, tartness.
مزازة *mazaaza* = *mazazaan*.
مزّز *mazziz*[1] /vi/ to become sour. - vn *tamziiz*; ava *mimazziz*.

[3] م ز ز
مزّة، مازّة *mazza*[2] <T *meze* from P> /n pl *-aat*/ hors d'oeuvres served with drinks.
مزّ *mazz*[2] *(i)* /vi/ to pick (at hors d'oeuvres served with drinks). - vn *mazz*; ava *maaziz*.
مزّز *mazziz*[2] /vi/ to eat *mazza*. - ava *mimazziz*.

م ز ع
مزع *mazaʕ (a)* **1** /vt/ **1a** to rip. *mazaʕ il-waraq nuṣṣeen wi-ramaa f-wiff-i* he ripped the papers in half and threw them at me. **1b** to rip off, wrench off. *nataʕ il-baab mazaʕ-u min maṭraħ-u* he wrenched the door and ripped it off its hinges. **2** /vi/ to tell whopping lies, spin yarns. - vn *mazʕ*; ava *maaziʕ*; pva *mamzuuʕ*.
مزعة *mazʕa* /n pl *-aat*/ tall story, whopping lie.
أمزع *ʔamzaʕ* /el/ more/most given to telling extravagant lies.
مزّاع *mazzaaʕ* /n */ teller of whopping lies.
اتمزع *ʔitmazaʕ* /vi/ **1a** to rip, be ripped. **1b** to be ripped off, be wrenched off. **2** to become inflated with pride. *ʔitmazaʕ lamma ʕaluu-lu ʔinta gadaʕ* it made him feel good when they told him he was a fine fellow of a man. - ava/iva *mitmiziʕ*.
مزّع *mazzaʕ* /vt/ to tear to shreds. - vn *tamziiʕ*; ava/pva *mimazzaʕ*.
اتمزّع *ʔitmazzaʕ* /vi/ **1** to tear, become torn. **2** to be torn to shreds. - ava/iva *mitmazzaʕ*.

م ز ق
مزق *mazaq (u)* /vt/ to tear (a muscle). *mazaqt*[i] *ḍahr-i w-ʔana ʃaylaa* I strained my back when I was carrying him. - vn *mazaqaan, mazq*; ava *maaziq*; pva *mamzuuq*.
مزقة *mazqa* /n pl *-aat*/ **1** instance noun of *mazq*. **2** a tear, a sprain.
اتمزق *ʔitmazaq* /vi/ to tear or be torn (of a muscle). - ava/iva *mitmiziq*.
مزّق *mazzaq* /vt/ to tear up, cut to shreds. *mazzaqit-lu ħduum-u* she tore up his clothes. - vn *tamziiq*; ava/pva *mimazzaq*.
اتمزّق *ʔitmazzaq* /vi/ **1** to tear (of muscles). **2** *[Isl]* to become an unbeliever (Sufi usage). **3** to be torn up, be cut to shreds. - ava/iva *mitmazzaq*.

م ز ك
مزّيكة *mazziika* /n/ **1** music. **2** /pl *mazaziik*/ mouth-organ.
مزّيكاتى *mazzikaati*↓ /n pl *-yya*/ (musical) instrumentalist.
مزّك *mazzik* /vi/ to make music. *ʕaaʕid yimazzik fig-gineena ʕaʃaan ħadd*[i] *yiddii-lu ʕirf* he sits playing music in the park so that people will give him a piastre. - vn *tamziik*; ava *mimazzik*.
اتمزّك *ʔitmazzik* /vi/ (impersonal) passive of *mazzik*. *laazim yitmazzik-lu ʕaʃaan yinaam* he has to have music played to him before he can get to sleep. - iva *mitmazzik*.

م ز ل ق see also ز ل ق
مزلق *mazlaq* /vi/ to become slimy. *ʔil-ʔakl*[i] *mazlaq wi-ṭayyar ṭaʕm-u* the food become slimy and its taste changed. - vn *mazlaqa*; ava *mimazlaq*.

– م ز م ب
مزمبليه *mizambiliih* <Fr *mise en plis*> /n pl *-aat*/ hair-set(ting).

م ز م ز
مزمز *mazmiz* /vi/ **1** to nibble at food. **2** to enjoy at leisure. *xadt il-ʕaʃara gneeh ʕaʕadt amazmiz fiihum ʕala mazaag-i* I took the ten pounds and enjoyed spending them bit by bit. - vn *mazmaza*; ava *mimazmiz*.

– م ز م ز
مزمزيل *mazmazeel*↓ <Fr *mademoiselle*> /fem n, pl *mazmazillaat*/ title of, and form of address or reference to, a young unmarried woman. - also *madimwazeel, madamwazeel*.
مزمزيه *mazmazeeh*↓ /fem n, pl *mazmazehaat*/ = *mazmazeel*.

م ز ن see و ز ن : *mizaan, mizaniyya*

– م ز ن س
ميزنسين *mizanseen* <Fr *mise en scène*> /n/ direction (of a play, film).

م ز و ر
مازورة *mazuura* <It *misura*> /n pl *mawaziir*/ **1** *[mus]* measure, bar. **2** tape-measure.

م ز ي
مزيّة *maziyya* /n pl *mazaaya*/ merit, virtue.

م ز ي ك و
مزيكو *muzayku* <It> /n/ **1** mosaic. **2** name given to various manufactured imitations of marble.

م س ا ج
مساج *masaaj* <Fr> /n/ massage.

م س ء see م س ى

م س ت ك
مستكة، مصطكة *mistika* <Gr *mastikha*> /n/ mastic.

م س ت ى ك
مستيكة *mastiika* <Gr *mastikha*> /coll n/ chewing gum.

م س ج see م س ا ج : *masaaj*

م س ح
مسح *masaḥ (a)* /vt/ **1** to wipe (clean). *ʕimsaḥ wiff-ak bil-mandiil* wipe your face with the handkerchief! *ʕimsaḥ-li g-gazma* polish my shoes for me! *ʕilli yquul-u n-nahar-da yimsaḥ-u b-ʕastiika bukra* ≈ what he says one day, he denies the next. *ḥ-amsaḥ biik il-ʕarḍ* I'll wipe the floor with you! ‖*masaḥ-l(u) guux* to toady to (s.o.). **2** *[Chr]* to anoint. **3** to survey, scan. **4** to smooth (with a plane). **5** *[agric]* to deepen (furrows) with a mattock after ploughing. – /vi/ **6** to glow with health, look glossy and in good condition. -vn *masḥ, masaḥaan*; ava *maasiḥ*; pva *mamsuuḥ*.
مسح *masḥ* **1** /vn/ ‖*kawitf-i masḥ* a worn tyre. -*maḍrab masḥ* ping-pong bat with a smooth rubber surface. **2** /n/ *[agric]* (season of) the widening of furrows in preparation for planting cotton.
مسحة *masḥa* /n pl -*aat*/ instance noun of *masḥ*.
مسحيّة *masḥiyya* = *masḥa*.
مسحاة *misḥa* /n pl -*aat*/ *[non-Cairene]* mattock, hoe.
مساحة *misaaḥa* /n pl -*aat*/ surface area, space. *ʕil-ḥukuuma bi-tḥaddid il-misaḥaat il-mazruuʕa quṭn* the government specifies the surface area of cotton that may be planted. ‖*maṣlaḥit il-misaaḥa* the Survey Department.
المسيح *ʕil-misiiḥ* or *ʕil-masiiḥ* /prop n/ the Messiah, Christ. *wil-misiiḥ il-ḥayy* by the Living Christ! *ʕil-misiiḥ* (or *ʕil-misiix*) *id-daggaal* (or *ig-gaddaal*↓) the Anti-Christ.
مسيحى *misiiḥi* or *masiiḥi* **1** /adj */ Christian. **2** /n */ a Christian.
مسيحيّة *misiḥiyya* or *masiḥiyya* /n/ Christianity.
مسّاح *massaaḥ* /n */ surveyor.
مسّاحة *massaaḥa* /n pl -*aat*/ wiper. *massaaḥit ʕarabiyya* car (windscreen) wiper.
ممسحة *mamsaḥa* /n pl *mamaasiḥ*/ **1** mop. **2** doormat.
اتمسح *ʕitmasaḥ* /vi/ passive of *masaḥ*. -iva *mitmisiḥ*.
مسّح *massaḥ* **1** /vt/ to wipe. **2** /vi/ to make a pass or passes (with the hand over s.o. or s.th.). -vn *tamsiiḥ*; ava *mimassaḥ*.
تمسيحة *tamsiiḥa* /pl -*aat*/ instance noun of *tamsiiḥ*.
اتمسّح *ʕitmassaḥ* /vi/ **1** to rub oneself (against s.th.). *gat il-quṭṭa titmassaḥ fi-rigl-i* the cat came and rubbed up against my leg. ‖*bi-yitmassaḥ fiina ʕaʃaan ɣadwa* he hangs around us hoping for a meal. **2** to create an appearance of relationship (e.g., with influential persons). *ʕammaal yitmassaḥ fil-ʕeela di* he's always making himself out to be a member of this family. **3** to be wiped. -ava/iva *mitmassaḥ*.

م س خ
مسخ *misix (a)* /vi/ to become tasteless or insipid. -vn *masaxaan*; ava *maasix, masxaan*.
مسخ *masax (a)* /vt/ to transform into (s.th. inferior). *rabb-i-na masax-u qird* God changed him into a monkey. ‖*kalaam mamsuux* garbled words. -vn *masaxaan, masx*; ava *maasix*; pva *mamsuux*.
ماسخ *maasix* /adj */ tasteless, bland, insipid. ‖*xallaa-ha masxa* he exceeded the bounds of good taste. -*ʃaay maasix* watery tea.
مسخة *musxa* /n pl *musax*/ laughing-stock, object of ridicule.
أمسخ *ʔamsax* /el/ more/most insipid, bland, tasteless etc.
المسيخ *ʕil-misiix, ʕil-masiix: ʕil-misiix id-daggaal* (also *ʕil-masiiḥ id-daggaal*) /prop n/ the Anti-Christ.
اتمسخ *ʕitmasax* /vt/ to be turned into, transformed into (s.th. inferior). -iva *mitmisix*.
مسّخ *massax* **1** /vt/ to mar, spoil. *kutr il-mikyaaj massax gamal-ha* too much make-up spoiled her beauty. ‖*massax il-kalaam ʕaleena* he spoke unpleasantly about us. **2** /vi/ to become tasteless or bland. *ʕil-ḥikaaya di massaxit ʔawi* this affair has gone quite stale. -vn *tamsiix*; ava/pva *mimassax*.
اتمسّخ *ʕitmassax* /vi/ to be marred, be spoiled. -iva *mitmassax*.

م س خ ر see also س خ ر ¹
مسخر *masxar* /vt/ **1** to slate, abuse. *kunt axaaf ʕafrab kitiir la-yiɣrafu fil-beet fa-ymasxaruu-ni* I was afraid to drink a lot lest they find out at home and give me a tongue-lashing. **2** *[slang]* to beat soundly, leave (s.o.) without a leg to stand on (e.g., in a match, competition, argument etc.). - vn *masxara*; ava/pva *mimasxar*.
مسخرة *masxara* /n/ **1** /pl *masaaxirˁ*/ (piece of) preposterous behaviour, farce. **2** ridicule, sarcasm.
اتمسخر ʔitmasxar /vi/ **1** passive of *masxar*. **2** to become derisive, engage in mockery. - ava/iva *mitmasxar*.

م س ر see م س و ر : *masuura*

م س ر ا
مسرى *misra* <Copt> /n/ Misra, the twelfth month of the Coptic year, early August to early September. *fi-misra tigri kullˁ tirɛa ɛisra [prov]* during Misra all the canals flow in sultry weather (rhyme indicating that it is the time of the Nile flooding).

م س ر ى ق
مسريقة *masariiqa* /n/ fatty covering, covering of the intestine.

م س ط ر د see م ص ط ر د

م س س
مسّ *massˁ (i)* /vt/ **1** to touch (lightly). **2** to reflect upon, cast aspersions on. *massˁ karamt-u* it undermined his dignity. *ʔin ħaddˁ massˁ ṭaraf-ak bi-kilma ʔana l-masʔuul* if anyone insinuates anything about you, I'll take care of it. *ma-fii-ʃ ħaaga fit-taqriir timiss-ak* there is nothing in the report that reflects on you. **3** to affect (of a demon, spirit). **4** to apply a (medicated) swab to. *niziil il-ɣiʃaaʔ wi-nmiss il-maṭraħ* we remove the membrane and swab the area. — /vi/ **5** to apply a (medicated) swab. *ʔid-duktuur massᵃ ɛal-ɛeen* the doctor swabbed the eye with medication. - vn *mass, masasaaan*; ava *maasis*; pva *mamsuus*.
مسّ *massˁ²* /n/ **1** medication applied with a swab to eye or gum infections. **2** treatment of eye or gum infections with medication.
مسّة *massaˁ* /inst n, pl *-aat*/ a single application of a (medicated) swab.
اتمسّ ʔitmass /vi/ passive of *massˁ*. - iva *mitmass*.
تماسّ *tamaass* /n/ **1** contiguity. ‖*xaṭṭ it-tamaass [soccer]* touch-line. **2** *[math]* tangency.

م س ط ر —
مسطرين *masṭareen* /n pl *-aat*/ builder's trowel.

م س ق see م س ى ق : *musiiqa, misiiqi*

م س ق ا ر see also م س ى ق
موسيقار *musiqaar* /n pl *-aat*/ expert musician, maestro.

م س ق ق ع
مسقعة *misaqqaɛa* /n/ dish whose main ingredients include minced meat and egg-plant, moussaka.

م س ك ¹
مسك *misik (i)* /vt/ **1** to take hold of, grasp. *misikt-a-ha min ʔid-ha* I took hold of her by the hand. *ʔis-suxuniyya timsik-ni bil-leel* the fever grips me at night. ‖ *ʔimsik nafs-ak* get a hold on yourself, pull yourself together! - *ʔimsik il-xaʃab* touch wood! (i.e. for luck). - *ʔimsik il-ɛaṣaaya min in-nuṣṣ* ≈ keep all possibilities open. - *ʔil-ħagar maasik nafs-u kwayyis* the rock is of solid consistency. **2** to capture, arrest. *misk-u l-buliis* the police arrested him. **3** to take on, be in charge of. *kullˁ ẓaabiṭ fil-markib bi-yimsik wardiyya* each officer on the ship takes a watch. *kullˁ lagna maska qṭaaɛ* each committee is in charge of a sector. *maskˁ dafaatir* bookkeeping. **4** to harp on, keep on about. *miskuu-lu l-ɣalṭa lli ɛamal-ha* they kept reminding him of his mistake. — /vi/ **5** /preverb/ to up and .... *misikt-a-ha ḍarabt-a-ha ɛalqa suxna* I upped and gave her a good thrashing. **6** to stick, adhere, hold. *ʔis-sabɣa b-timsik ṭawwaali* the dye sets immediately. *ʔir-riiħa b-timsik fil-huduum* the odour clings to clothing. ‖ *ʔimsik fimaal-ak* keep to the left! - *ɛafaan baṭn-a-ha timsik* so that her bowels will firm up. - *ʔil-keef misik fi-dmaaɣ-u* he became addicted. - vn *mask, masakaan*; ava *maasik*; pva *mamsuuk*.
¶ *misik fi-* (1) to invite pressingly, as in *misik fiyya ɛal-ɣada* he insisted on my lunching with him. (2) to pick a quarrel with, as in *ṭuul in-nahaar yimsik fi-lli raayiħ wi-lli gaay* he's always picking quarrels with the passers-by.
مسكة *maska* /inst n, pl *-aat*/ a grip, a hold. *ʔil-maska mneen* how does one hold (it)?
اتمسك ʔitmasak /vi/ passive of *misik*. - iva *mitmisik*.
مسّك *massikˁ* /vt/ **1** to cause to take hold of. *massikuu fanuus* they put a lantern in his hand. **2** to cause to hold, cause to adhere. *ʔamassik kullˁ ruloteen bi-klibs* I secure each pair of rollers with a hairpin. **3** to charge with, entrust to. *massikt axuu-ya l-maħall* I put my brother in charge of the store. - vn *tamsiik*; ava/pva *mimassik*.
اتمسّك ʔitmassikˁ /vi/ **1** passive of *massik*. **2** to insist. *ʔil-muħaami tmassik bi-nuqṭa ʔigraʔiyya* the lawyer

clung to a point of procedure. -vn *tamassuk*↑; ava *mutamassik*; ava/iva *mitmassik*.

اتماسك *ʔitmaasik* /vi/ to take hold of oneself. *laazim titmaasik fiwayya* you should be a bit firm with yourself. -vn *tamaasuk*; ava *mitmaasik, mutamaasik*↑.

تماسك *tamaasuk*↑ /n/ consistency, cohesiveness.

متماسك *mutamaasik*↑ /adj */ cohesive.

أمسك *ʔamsak* /vi/ *[Isl]* to fast from dawn to sunset in Ramadan. -vn *ʔimsaak*; ava *mumsik*.

إمساك *ʔimsaak* /n/ **1a** abstention. **1b** *[Isl]* time before dawn in Ramadan when Muslims are supposed to stop eating. **2** constipation.

إمساكيّة *ʔimsakiyya* /n/ Ramadan calender giving the times of the five prayers, the *furuuq* and the *ʔimsaak*.

م س ك [2]

مسك *misk* /n/ musk.

مسكة *miska* /coll n/ *[euphem]* cattle dung.

مسّك *massik*[2] /vt/ perfume with musk. ‖*ṣabuun mimassik* scented toilet soap. -ava/pva *mimassik*.

اتمسّك *ʔitmassik*[2] /vi/ to be perfumed with musk. -iva *mitmassik*.

م س ك ن

مسكين *maskiin, miskiin* /adj pl *masakiiñ/* pitiable, wretched. *da maskiin ma-luu-ʃ ḫadd* he is to be pitied for he has no one. *maskiina - goz-ha maat in-nahar-da* poor woman, her husband died today. *huwwa maskiin fi-ʒaql-u* he's simple-minded.

اتمسكن *ʔitmaskin* /vi/ **1** to feign humility and submissiveness. *ʔitmaskin lamma titmakkin [prov]* ≈ fawn and beg until you get your chance. **2** to pretend to be pitiable or wretched. -vn *maskana*; ava *mitmaskin*.

(م س ك ى)

موسكي *muski* <poss *Moscow*> /coll n/ type of pitch pine.

الموسكى *ʔil-muski* <poss Fr *mosquée*> /prop n/ street in Cairo running from Ataba to el-Azhar through a market area.

م س ل

مثل *misl* /n/ like thing, peer. *ma-laqet-ʃ*[i] *misl-ak* I did not find the like of you. *misl*[i] *ʒaalik* like this. *bil-misl* similarly, in similar fashion, as in *ʔil-muʕamla bil-misl* tit for tat. *ka-misl* see *ka-*.

مثل *masal* /n pl *ʔamsaal/* **1** proverb, saying. *ʕala raʔy il-masal* as the proverb says. **2** example, instance. *ʔana miʃ faahim - ʔiddii-ni masal* I don't understand - give me an example. ‖*masal ʔaʕla* ideal (person).

¶ *masalan* /adv/ for example, for instance.

أمثال *ʔamsaal* /pl n, in constr/ the likes of. *ʔil-quwwaad il-kubaar ʔamsaal-u* great leaders like him.

مثال *misaal* /n pl *ʔamsila/* **1** example. *ʕala sabiil il-misaal* by way of example. **2** sign, symbol. *misaal is-saluus* a symbol of the Trinity. **3** like thing, peer. *ma-lhaa-ʃ misaal* there is nothing like it, it is beyond compare. **4** ideal model, exemplar. *misaal liʃ-ʃagaaʕa* a model of courage.

مثالى *misaali* /adj */ **1** ideal, exemplary. **2** living in a world of one's own, living in an ivory tower.

مثاليّة *misaliyya* /n/ perfectionism.

مثيل *masiil* /n/ like thing, peer. *ma-lhaa-ʃ masiil* there is nothing like it, it is beyond compare.

أماثل *ʔamaasil*↓ **1** /pl adj/ staunch, reliable. *naas ʔamaasil* solid citizens. **2** /pl n/ fuss, trouble. *kull*[i] *yoom yiigi yiʕmil-lu ʔamaasil hina* every day he comes here and creates a scene.

مثّال *massaal*↑ /n */ **1** cast maker. **2** sculptor.

تمثال *timsaal* /n pl *tamasiil/* statue, statuette. *timsaal niṣfi* bust.

مثّل *massil* /vt/ **1** to act (a role). *bi-tmassil door il-baṭala* she plays the part of the heroine. **2** to represent. *massil il-hayʔa fil-muʔtamar* he represented the organization at the conference. *ʔit-tamsiil id-diblumaasi* diplomatic representation. ‖*badal tamsiil* expense allowance. **3** to depict, portray. *ʔil-ʔalwaan il-ʁamqa bi-tmassil il-ḫuzn* the dark colours represent grief. — /vi/ **4** to act, play-act. *ʔinta ʕayyaan fiʕlan walla bi-tmassil* are you really ill or just putting it on? *tamsiil ṣaamit* mime. -vn *tamsiil*; ava *mimassil*.

تمثيليّة *tamsiliyya* /n pl *-aat/* drama, play.

ممثّل *mumassil* /n */ **1** actor. **2** representative. *mumassil niyaaba* counsel for the prosecution.

ممثّلة *mumassila* /n pl *-aat/* **1** actress. **2** woman representative.

اتمثّل *ʔitmassil* /vi/ **1** to be acted, be acted out. **2** to be represented. -iva *mitmassil*.

ماثل *maasil* /vt/ to correspond to. *ʔiṣ-ṣuura bi-tmaasil il-ʔaṣl* the copy corresponds to the original. -vn *mumasla*; ava *mimaasil*.

مماثل *mumaasil* /adj */ analagous, corresponding, similar.

امتثل *ʔimtasal* /vi/ to submit, subject oneself. *kull-i-na mimtisliin li-ʔamr illaah* we all surrender to the will of God. -vn *ʔimtisaal*; ava *mimtisil*.

استمتل *ʔistamtil*↓ /vi/ to submit, acquiesce. *ʔistamtil li-ḫukm illaah* he submitted to God's ruling. -vn *ʔistimtaal*; ava *mistamtil*.

م س ل م see also س ل م
اتسلم ʕitmaslim /vi/ *[derog]* to become a Muslim, convert to Islam (for reasons of convenience). - ava *mitmaslim*.

م س ل ى ن
موسلين *musiliin* (also *ħariir musiliin*) <Fr *mousseline*> /n/ type of artificial silk.

م س م ر see also س م ر [2]
مسمر *masmar* /vt/ **1** to nail. **2** to quilt-stitch. - vn *masmara*; ava/pva *mimasmar*.
اتسمر ʕitmasmar /vi/ **1** to be nailed. **2** to be quilt-stitched. - iva *mitmasmar*.

م س ن [1]
مسانة، مثانة *masaana* /n/ *[anat]* bladder.

م س ن [2] see س ن : *misaniyya*

م س ن [3] see م س و ن : *masuun, masuuni, ʕil-masuniyya*

م س و ر
ماسورة *masuura* <prob P *mâshûra*> /n pl *mawasiir, masuraat*/ **1** pipe, tube. *masuurit farmala* brake cable. *masuurit ik-kabbaas* piston casing, piston shaft. **2** marrow-bone.

م س و ن
ماسون *masuun* /coll n/ Freemasons.
ماسونى *masuuni* **1** pertaining to freemasonry. *maħfal masuuni* masonic lodge. **2** /n/ a Freemason.
الماسونيّة ʕil-masuniyya /n/ freemasonry.

م س ى
مساء *misa* or *masa, misaaʕ↑* or *masaaʕ↑* /n/ evening. *misa l-xeer* (or *masaaʕ il-xeer* etc., or *sa l-xeer*) good evening! good afternoon! ‖*miit misa* and *misa s-suṭal* greeting used between hashish-smokers.
¶ *misaaʕan* or *masaaʕan* /adv/ in the evening, in the afternoon. *ʕis-saaɛa sitta masaaʕan* six o'clock in the afternoon.
مسائى *misaaʕi* or *masaaʕi* /adj */ pertaining to the evening. *duruus masaʕiyya* evening classes.
أمسيّة ʕumsiyya↑ /n/ soirée, evening gathering.
مسّى *massa* [2] /vt/ **1** to cause to spend the evening (of God). *ʕallaah yimassii-k bil-xeer* God grant you a good evening! **2** to deal with (s.o.) in the evening. *massaa-ni b-ɛalqa* he wound up my day for me with a beating. ‖*la ṭṣabbaħ-u wala tmassii* ≈ keep well away from him! - /vi/ **3** to spend the evening. *ṣabaħna f-ɛaknana w-masseena f-xinaaqa* we started the day in irritation and ended it in a quarrel. **4** to say good evening. - vn *tamsiyya*; ava/pva *mimassi*.
تمسيّة *tamsiyya* /n pl *tamaasi*/ evening greeting. *masaaʕ it-tamaasi [joc]* the best of good evenings to you!
اتمسّى ʕitmassa /vi/ **1** passive of *massa* [2] 1 and 2. **2** to be late in the evening. *ʕitmasseena qawi ɛala ma qafalna d-dukkaan leelit ʕimbaariħ* we were very late in closing the shop last night. - ava/iva *mitmassi*.

م س ى ق
موسيقى *musiiqaʕ* <Gr> /n/ music.
موسيقى *musiiqiʕ* **1** /adj/ musical. *ʕalaat musiqiyya* musical instruments. **2** /n */ musician. see further under م س ق ا ر

م س ى و
مسيو *misyu* <perh Fr *monsieur*> /n/ informal term of address to a male or (occasionally) a female foreigner.

م ش
مش *miʃ, muʃ* /part/ not. *miʃ kida* (1) not like that. (2) isn't that so? *da miʃ mumkin* that's impossible. *miʃ ħ-aqul-lak* I shan't tell you.

م ش ت ش – see ش ف ى [1] : *muʃtaffa, miʃtaffa*

م ش د ق
اتشدق ʕitmaʃdaq /vi/ **1** *[deris]* to chew. *ṭuul in-nahaar titmaʃdaq bil-libaan* all day long she chews gum. **2**↑ to repeat erudite words senselessly. - also *ʕitʃaddaq*. - vn *maʃdaqa*; ava/pva *mitmaʃdaq*.

م ش ش
مشّ *miʃʃ* /n/ seasoned milk-based liquid culture in which cheese is fermented for about two years, the final product consisting of lumps of fermented cheese in a thick liquid. *miʃʃ daayir* fully thickened and matured *miʃʃ*. ‖*zayy il-miʃʃ - kull saaɛa fil-wiʃʃ [prov]* like *miʃʃ*, it's always around (said of something boringly familiar). - *zayy duud il-miʃʃ minnu fii [prov]* ≈ rot begins from within.
مشّش *maʃʃiʃ* /vi/ to become rotten, decay. *ʕil-beeq maʃʃiʃ min il-ħarr* the eggs have gone off because of the heat. - vn *tamʃiiʃ*; ava *mimaʃʃiʃ*.

م ش ط
مشط *miʃṭ* /n pl *miʃaaṭ, ʕamʃaaṭ, miʃṭa*/ **1** comb.

‖*kabriit miʃṭ* book matches. -*miʃṭ[i] kabriit* a book of matches. -*furʃa miʃṭ* flat paint brush. -*faara miʃṭ [carp]* roughening plane. -*miʃṭ[i] musaddas* cartridge clip. -*daxal fi-miʃṭ-i* I became fond of him. **2** ball of the foot. ‖*ʕiddaa-lu miʃṭ* he tripped him up. **3** (also *miʃṭ[i] samak*) a fish (usually of the perch type).

ماشطة *maʃṭa* /n/ woman employed to make up and prepare a bride. *ʕeeʃ tiʕmil il-maʃṭa fil-wiʃʃ il-ʕikir [prov]* ≈ you can't make a silk purse out of a sow's ear.

مشّط *maʃʃaṭ* /vt/ **1** to comb, card. **2** to rake. -vn *tamʃiiṭ*; ava/pva *mimaʃʃaṭ*.

اتمشّط *ʔitmaʃʃaṭ* /vi/ **1** to be combed, be carded. **2** to be raked. -iva *mitmaʃʃaṭ*.

م ش ك ح

مشكاح *miʃkaaḥ* given name used in proverbs (in combination with the equivalent female name *rüma* (q.v.)) to signify a good-for-nothing man.

مشكح *maʃkaḥ* /vi/ to idle about, loaf around. *ʕaaʕid yimaʃkaḥ fiʃ-ʃaariʕ - la ʃuɣla wala maʃɣala* he hangs about the street without a job of work or anything to do. -vn *maʃkaḥa*; ava *mimaʃkaḥ*.

اتشكح *ʔitmaʃkaḥ* = *maʃkaḥ*. -ava *mitmaʃkaḥ*.

م ش م see م ش ى : *maʃiima*

م ش م ش

مشمش *miʃmiʃ* /coll n/ apricot(s). ‖*fil-miʃmiʃ* ≈ that'll be the day, I should live so long! as in *ḥa-ygib-li l-fuluus bukra.* - *ʔil-kalaam da fil-miʃmiʃ* 'He'll bring me the money tomorrow.' 'That'll be the day!' -*bukra fil-miʃmiʃ* when pigs fly.

مشمشة *miʃmiʃa* /unit n, pl -*aat*/ an apricot.

مشمشاية *miʃmiʃaaya* = *miʃmiʃa*.

مشمشي *miʃmiʃi* /adj invar/ apricot-coloured.

مشمشيّة *miʃmiʃiyya* /n/ **1** dried apricots. **2** fruit compote of stewed dried apricots (sometimes including currants and nuts).

م ش ن ن

مشنّة *miʃanna* <perh Copt> /n pl -*aat*/ large shallow basket made of withies (see Pl.B, 9).

م ش و ر

مشوار *miʃwaar* /n pl *maʃawiir*/ **1** errand. *ruḥna miʃwarna* we went on our errand. **2** distance. *huwwa msaafir wi-miʃwaar-u ṭawiil* he is travelling a long distance. *ṭaxx[i] miʃwaar* see *ṭaxx*.

مشور *maʃwar* **1** /vt/ to send on (numerous or long) errands, cause (s.o.) to go a long way. **2** /vi/ to go on numerous errands. -vn *maʃwara*; ava/pva *mimaʃwar*.

اتشور *ʔitmaʃwar* /vi/ to be sent a long way or on long errands. -iva *mitmaʃwar*.

م ش ى [1]

مشى *miʃi (i)* /vi/ **1** to walk. *geet maaʃi* I came on foot. **2** to go, move away. *ḥa-timʃi wi-tsib-ni zaʕlaan kida* are you going to go and leave me upset like this? *ʔimʃi* shoo! away with you! get out! **3** to move, move along. *ʔil-ʔutubiis kaan maaʃi b-surʕa* the bus was moving fast. *maaʃi bil-koora* he's dribbling the ball. ‖*ʕala l-maaʃi* cursorily, as in *ḥ-aakul ʕal-maaʃi* I'll grab a bite to eat. **4** to proceed. *kull-u maaʃi tamaam* everything's going well. *kunt[i] maaʃi fil-ʔaaya w-baʕdeen sibt[i] kilma* I was going along (reciting) the verse and then I skipped a word. *kilma minnak wi-bass[i] w-kull-u yimʃi* one word from you would get things moving. *ʔid-dinya ma-b-timʃii-ʃ ʔilla b-kida* ≈ that's the way the world goes round. ‖*kalaam-u maaʃi* what he says goes. -*ʔalla-kilmit xaddaam timʃi ʕala kilmit ʔaxuu-k* what's this! the word of a servant overrules that of your brother? -*maʃayaan il-baṭn* diarrhoea. -*baṭn-i maʃya* I have diarrhoea. -*ma-timʃii-ʃ wara baṭn-ak* ≈ don't eat everything you feel like eating. **5** to conduct oneself, behave. *bi-yiigu maṣr[i] w-ma-yiʕrafuu-ʃ yimʃu xaaliṣ* they come to Cairo and they haven't any idea how to behave. **6** to function. *ʔig-gihaaz ma-b-yimʃii-ʃ maẓbuuṭ* the equipment doesn't work properly. *ḥa-yʔassar ʕala maʃyit is-saaʕa* it will affect the working of the watch. -vn *maʃy, maʃayaan*; ava *maaʃi*.

مشية *maʃya* /n pl -*aat*/ **1** instance noun of *maʃy*. **2** manner of walking, gait.

ماشى *maaʃi* /interj/ O.K., all right. *ḥa-nʃuuf-ak hina bukra.* - *maaʃi* 'We'll see you here tomorrow.' 'All right.'

ماشية *maaʃiya*↑ /coll n, pl *mawaaʃi*/ cattle.

مشاة *muʃaah* /pl n/ **1** infantry. **2** pedestrians.

مشّاية *maʃʃaaya* /n pl -*aat*/ **1** walkway, path. **2** long narrow carpet for a corridor, runner. **3a** baby-walker. **3b** child's scooter.

ممشى *mamʃa* /n pl *mamaaʃi*/ **1** path. **2** *[naut]* gangway, gangplank.

مشّى *maʃʃa* /vt/ to cause to walk, cause to move, cause to go etc. *bi-nmaʃʃi fiiha mayya* we let water pass through it. *di mumkin timaʃʃi ʃ-ʃuɣl* this may get the work moving. ‖*maʃʃa kalaam-(u)* to have one's own way. -*maʃʃa ḥaal-(u)* (1) to look out for oneself, promote one's own interests. (2) to get moving, get a move on. -vn *tamʃiyya*; ava/pva *mimaʃʃi*.

اتمشّى ʔitmaʃʃa /vi/ **1** passive of *maʃʃa*. **2** to walk, go for a walk, stroll. *ɛala baal ma ʔatmaʃʃa l-ɣaayit il-madrasa tkuun baɛit sabɛa* by the time I've walked to school, it'll be seven. ‖*nitmaʃʃa maɛa t-tilmiiz ɛala ɛadd^{i} ʔidraak-u* we go along with the student keeping step with his level of comprehension. **3a** to defecate (particularly after a spell of constipation). **3b** to have diarrhoea. - vn *tamʃiyya*; ava/iva *mitmaʃʃi*.

تمشّية *tamʃiyya* /n pl *-aat*/ stool.

اتماشى ʔitmaaʃa$^{↑}$ /vi/ to get along with, agree with. *laazim nitmaaʃa maɛa g-gaww* ≈ we have to go along with the tide. - ava *mitmaaʃi*.

^{2} م ش ى see م ا ش : *maaʃa*

م ص ت ك see م س ت ك

^{1} م ص ر

مصر *maṣr* /fem prop n/ **1** Egypt. *maṣr^{i} ʔumm id-dunya [prov]* Egypt is the cradle of civilization ≈ Egypt is the best place on earth. **2** Cairo. ‖*maṣr ig-gidiida* Heliopolis, a suburb north-east of Cairo. - *maṣr il-ɛadiima* Old Cairo, an area of southern Cairo east of the Nile. - *ʔibn^{i} maṣr* a Cairene (usually with implications of polish, politeness and sophistication).

مصرى *maṣri* **1** /adj */ Egyptian. ‖*hawa maṣri* north wind. **2** /n */ an Egyptian. **3** /n no pl/ drum rhythm (in the *zaar*).

مصراوى *maṣraawi$^{↓}$* /adj * and pl *-yya*/ Cairene (of people, with the implication of sophistication).

مصّر *maṣṣar* /vt/ to Egyptianize. - vn *tamṣiir*; ava/pva *mimaṣṣar*.

اتمصّر ʔitmaṣṣar /vi/ **1** to be Egyptianized. **2** to take Egyptian nationality. - ava/iva *mitmaṣṣar*.

^{2} م ص ر

مصران *muṣraan* **1** /n pl *maṣariin*/ intestine. *ʔil-muṣraan il-ʔaɛwar* the appendix. *ʔil-muṣraan il-ɣaliiẓ* the colon. **2** *maṣariin* /pl n/ intestines, entrails, bowels. ‖*ʈallaɛ maṣariin-(u)* to give (s.o.) a bad time.

^{1} م ص ص

مصّ *maṣṣ (u)* /vt/ **1** to suck. *bi-ymuṣṣ^{i} ṣbaaɛ-u* he sucks his thumb. *ɢaɛdiin yimuṣṣu ɢaṣab* sitting sucking the juice out of sugar cane. ‖*maṣṣ ... (zayy il-)lamuuna* to take all there is to get (from s.o. or s.th.). **2** to absorb (liquid). *ʔil-fanilla bi-tmuṣṣ il-ɛaraɢ* the undershirt absorbs sweat. **3** to emaciate, enervate (of an illness etc.). - vn *maṣṣ, maṣaṣàan*; ava *maaṣiṣ*; pva *mamṣuuṣ*.

مصّة *maṣṣa* /inst n, pl *-aat*/ a suck.

مصاصة *miṣaaṣa* /coll n/ that which remains after juice or sap has been extracted. *miṣaaṣit il-ɢaṣab bi-tidxul fi-ṣnaaɛit il-xaʃab il-ɦubaybi* sugar-cane fibre is used in the manufacture of chipboard.

مصّاصة *maṣṣaaṣa* /n pl *-aat*/ sucker, lollipop.

اتمصّ ʔitmaṣṣ /vi/ passive of *maṣṣ*. - iva *mitmaṣṣ*.

مصّص *maṣṣaṣ* /vt/ to give to suck. *maṣṣaṣit-u lamuuna ɛaʃaan ma-yistafraɣ-ʃ* she made him suck a lemon so he would not vomit. - vn *tamṣiiṣ*; ava/pva *mimaṣṣaṣ*.

اتمصّص ʔitmaṣṣaṣ /vi/ to be given to suck. - iva *mitmaṣṣaṣ*.

امتصّ ʔimtaṣṣ /vt/ to absorb. *ʔaɦuṭṭ^{i} raml^{a} ɛaʃaan yimtaṣṣ iz-zeet* I put down sand to absorb the oil. ‖*ʔimtaṣṣ^{i} ɣaḍab il-gamahiir* he neutralized the anger of the people. - vn *ʔimtiṣaaṣ*; ava *mimtaṣṣ*.

^{2} م ص ص

مصّيص *maṣṣiiṣ* /n/ plaster of Paris.

م ص ط ب

مصطبة *maṣṭaba* /n pl *maṣaaṭib*/ **1** bench of mud, brick or concrete built up against the wall of a building. **2** *[agric]* ridge between two furrows. **3** *[naut]* gridiron, cradle. **4** mastaba, stone tomb (ancient Egyptian).

م ص ط ر د

مسطردة، مصطردة *muṣṭarda* <It *mostarda*> /n/ mustard.

م ص ط ك see م س ت ك

م ص ل

مصل *maṣl* /n pl *ʔamṣaal*/ vaccine, serum.

م ص م ص

مصمص *maṣmaṣ* /vt/ **1** to chew and suck on. *ʔil-kalb^{i} kaan bi-ymaṣmaṣ (f)il-ɛaḍma* the dog was chewing on the bone. *maṣmaṣ ʃafayf-u* he sucked his lips. **2** to rinse out, swill. - vn *maṣmaṣa*; ava/pva *mimaṣmaṣ*.

اتمصمص ʔitmaṣmaṣ /vi/ **1** to be chewed and sucked on. **2** to be rinsed out. - iva *mitmaṣmaṣ*.

م ص و ع see also ص و ع

مصوع *maṣwaɛ* /vi/ to loaf about, bum around. - vn *maṣwaɛa*; ava *mimaṣwaɛ*.

اتصوع ʔitmaṣwaɛ = *maṣwaɛ*. - ava *mitmaṣwaɛ*.

– م ض ر ب see – م ط ر ب : *maḍrabiiṭa*

م ض غ see ن د غ : *maḍaɣ, maḍɣa, ʔitmaḍaɣ*

م ض م ض

مضمض *maḍmaḍ* /vt/ to rinse (one's mouth), swill water around in (the mouth). - vn *maḍmaḍa*; ava/iva *mimaḍmaḍ*.

مضمضة *maḍmaḍa* /n/ mouthwash.

اتمضمض *ʔitmaḍmaḍ* /vi/ to rinse one's mouth, swill water in the mouth. - ava *mitmaḍmaḍ*.

م ض ى [1]

مضى *maḍa*[1] *(i)* /vi/ **1** to sign one's name. *laazim timḍi ʕal-ʔistimaara* you have to sign the form. *maḍa ʕalee bil-miwafqa* he signed his consent on it. — /vt/ **2** to sign. *ʔimḍi-sm-ak ʔinta mif ism*[i] *mraat-ak* you sign your own name, not your wife's. *waraqa maḍii-ha raʔiis il-qism* a paper signed by the department chairman. **3** *[slang]* to put (hashish) on the tobacco (when preparing a water-pipe). - vn *ʔimḍa*; ava *maaḍi*; pva *mamḍi*.

إمضاء *ʔimḍa* /n pl *ʔimḍaʔaat*/ signature.

اتمضى *ʔitmaḍa* /vi/ to be signed. - iva *mitmiḍi*.

مضّى *maḍḍa*[1] /vt/ **1** to cause (s.o.) to sign his name. *bi-yruuḥ lil-muddaʕa ʕalee wi-ymaḍḍii ʕala l-ʔaṣl* he goes to the defendant and makes him sign the original. **2** to cause to be signed. *xud il-waraqa di maḍḍii-ha minnu* take this paper and get it signed by him. - vn *tamḍiyya*; ava/pva *mimaḍḍi*.

اتمضّى *ʔitmaḍḍa*[1] /vi/ to be made to sign one's name. - iva *mitmaḍḍi*.

م ض ى [2]

مضى *maḍa*[2] *(i)* /vi/ to pass, become part of the past. *kull*[i] *ʃeeʔ faat wi-maḍa* everything is over and done with. - vn *maḍayaan*; ava *maaḍi*.

ماضى *maaḍi* **1** /adj */ *[gram]* past. *fiʕl*[i] *maaḍi* past tense verb. **2** /n/ *ʔil-maaḍi* **2a** the past. *fil-maaḍi* in the past. **2b** parts already memorized (in Koranic study).

مضّى *maḍḍa*[2] /vt/ to pass, spend (time). *zimil-na bi-ymaḍḍi kull*[i] *waqt-u fil-qahwa* our colleague spends all his time in the coffee shop. - vn *tamḍiyya*; ava/pva *mimaḍḍi*.

اتمضّى *ʔitmaḍḍa*[2] /vi/ to be passed, be spent (of time). *ʔil-ʔagaaza tmaḍḍit fi-ʕazaab* the holiday was passed in anguish. - iva *mitmaḍḍi*.

م ط ر

مطر *maṭar* /n/ rain.

مطرة *maṭara* /n/ rain. - also *naṭara*.

مطّر *maṭṭar* /vi/ to rain. *ʔid-dinya* (or *ʔil-maṭara*) *maṭṭarit* it rained. *ʔid-dinya* (or *ʔil-maṭara*) *bi-tmaṭṭar* it is raining. - also *naṭṭar*. - vn *tamṭiir*; ava *mimaṭṭar*.

م ط ر ا ن

مطران *muṭraan* <Syr> /n pl *maṭarna*/ *[Chr]* metropolitan.

مطرانيّة *muṭraniyya* /n/ *[Chr]* **1** area of a metropolitan's jurisdiction. **2** residence and administrative centre of a metropolitan.

م ط ر ب –

مطربيطة *maṭrabiiṭa* (also *maḍrabiiṭa*) <It *madrevita*> /n pl *-aat*/ *[mech]* large thread-cutting stock and die.

م ط ط [1]

مطّ *maṭṭ*[1] *(u)* **1** /vt/ to stretch, pull out. ‖*maṭṭ*[i] *fafayf-u* he smacked his lips. **2** /vi/ to stretch. *ʔil-ʔastik maṭṭ* the elastic has stretched. - vn *maṭṭ, maṭaṭaan*; ava *maaṭiṭ*; pva *mamṭuuṭ*.

مطّة *maṭṭa* /inst n, pl *-aat*/ a stretching.

مطّاط *maṭṭaaṭ* **1**↑ /n/ rubber. **2** /adj/ rubbery, elastic.

مطّاطى *maṭṭaaṭi*↑ /adj/ of or pertaining to rubber. *ḥizaam maṭṭaaṭi* a rubber belt.

اتمطّ *ʔitmaṭṭ* /vi/ to stretch or be stretched. - ava/iva *mitmaṭṭ*.

مطّط *maṭṭaṭ* /vt/ to stretch out. ‖*maṭṭaṭ fafayf-(u)* to grimace in disagreement. - vn *tamṭiiṭ*; ava/pva *mimaṭṭaṭ*.

تمطيطة *tamṭiiṭa* instance noun of *tamṭiiṭ*. ‖*nooma w-tamṭiiṭa ʔaḥsan min faraḥ ṭiiṭa [prov]* a sleep and a stretch-out (at home) are better than (pointless) party-going.

اتمطّط *ʔitmaṭṭaṭ* /vi/ **1** to be stretched out. **2** to stretch oneself. *ʔil-quṭṭa qaʕda titmaṭṭaṭ wi-tiftaḥ buqq-a-ha* the cat is stretching and yawning. - ava/iva *mitmaṭṭaṭ*.

م ط ط [2]

مطّ *maṭṭ*[2] <prob Fr> /adj invar/ matt, dull (in colour). *zeet il-maṭṭ* oil used in applying a matt finish.

م ط ع

تمطيعة *tamṭiiʕa* /n/ stretching and yawning.

اتمطّع *ʔitmaṭṭaʕ* /vi/ to stretch oneself. - ava *mitmaṭṭaʕ*.

م ط ل

ماطل *maaṭil* (also *maaliṭ*↓) /vt/ to put off with fake excuses, prevaricate with. *baqu ymaṭluu-ni fil-ʔugra* they started stalling with the rent. - vn *mimaṭla*; ava *mimaaṭil*.

م ط ن ى

مطانية *maṭanya* <Gk *metanoia*> /n/ *[Chr]* prostration. *ʔiqrab-lu maṭanya* bow down to the ground before him.

م ط و see ط و ى : *maṭwa*

م ط و ل
مطول *maṭwil* /vi/ to prevaricate, be evasive (particularly in paying one's debts). - vn *maṭwala*; ava *mimaṭwil*.

م ط ى
مطيّة *maṭiyya* /n pl *maṭaaya*/ mount (usually a donkey). ‖*ʕamlin-ni maṭiyyit-hum* ≈ they are using me as a door-mat.

م ع
مع *maʕa* /w pron suff *maʕaa-*; 1st sing *maʕaaya*/ preposition indicating **1** accompaniment. *ʔitfaḍḍalu maʕaana* please come with us. *maʕaahum waḥda sitt* there's a woman with them. *maʕaak it-taẓkara* do you have the ticket with you? *ma-maʕii-ʃ fakka* I haven't any change on me. *ʔana mabsuuṭ maʕaakum* I'm happy to be (e.g., living or working) with you. ‖*xallii-k maʕa llaah* ≈ place your trust in God. - *maʕa ẓaalik* in spite of that. **2** concurrence of direction. *law ʔinta maaʃi maʕa t-tirʕa yibqa bet-na ʕala ʃmaal-ak* if you're walking in the same direction as the flow of the canal, our house is on your left. **3** concurrence of action. *bi-tifṣil maʕa surʕi il-mutoor* it disconnects as the motor picks up speed. *maʕa l-waqt* with the passage of time. **4** agreement or support. *ʔana maʕaak* (1) I agree with you. (2) I'm on your side. ‖*maʕaahum maʕaahum ʕaleehum ʕaleehum* when things are going for them he's with them, when things turn against them so does he (of one who has no mind of his own). **5** interaction. *ʔittafaqt maʕa g-giraan* I came to an agreement with the neighbours. *ziʕlit maʕa goz-ha w-sabít-u* she had a row with her husband and left him. *zaʕlaniin maʕa baʕḍ* on bad terms with each other.
¶ *maʕa ʔinn* /conj/ although, in spite of the fact that.

م ع ج ن see also ع ج ن
معجن *maʕgin* /vt/ to fill and smooth over (holes in a surface), dress (a surface preparatory to painting etc.). *ma-maʕgint-ʃ il-ḥeeṭa kwayyis ʔabl ma bayyaḍt-a-ha* you didn't dress the wall properly before painting it. - vn *maʕgana*; ava/pva *mimaʕgin*.
اتعجن *ʔitmaʕgin* /vi/ passive of *maʕgin*. - iva *mitmaʕgin*.

[1] م ع د
معدة *miʕda* /n/ stomach. *fumm il-miʕda* epigastrium. ‖*kalaam-i miʃ ʕala l-miʕda* people can't stomach what I say.

معدى *maʕidiʔ* /adj/ pertaining to the stomach.

[2] م ع د see و ع د : *maʕaad, miʕaad*

م ع د ن see [1] ع د ن

م ع ر
معر *maʕar (u)* /vi/ to brag, boast of one's exploits. - vn *maʕr*.
معرة *maʕra* /pl *-aat*/ instance noun of *maʕr*.
معّار *maʕʕaar* /n/ idle boaster.

م ع ز
معزة *miʕza* /n pl *-aat, miʕiiz, miʕaz*/ **1** (nanny) goat. **2** coward.

م ع ص ر – see [1] ع ص ر : *maʕṣaraawi*

م ع ظ م see also ع ظ م
اتعظم *ʔitmaʕẓam* /vi/ **1** *[iron]* to do great things, perform great feats. *ʔitmaʕẓam wi-gaab nuṣṣ kiilu ruzz* he performed the great feat of bringing half a kilo of rice. **2** to be stuck up or pompous. - ava *mitmaʕẓam*.

م ع ل ش ش
معلهش *maʕaliʃʃ, maʕalihʃ, maʕaliʃʃi, maʕaleeʃ* /interj/ **1** never mind, don't worry about it. **2** sorry! excuse me!

م ع م ع
معمعة *maʕmaʕa* /n/ turmoil, thick of things.

م ع ن
ماعون *maʕuun* /n, dual *maʕunteen*, pl *mawaʕiin*/ **1** kitchen pot. ‖*da min maʕuun baṭṭaal* he comes of bad stock. **2** *mawaʕiin* /pl n/ pots and pans, kitchen utensils in general.

م ع ى
أمعاء *ʔamʕa, ʔamʕaaʔ* /pl n/ intestines.
معوى *maʕawi* /adj/ pertaining to the intestines, intestinal. *nazla maʕawiyya* intestinal infection.

م غ ت
مغات *muɣaat* or *muɣaat* /n/ **1** roots of Glossostemon brugieri. **2** an infusion of the same (traditionally drunk by recently delivered mothers and their visiting well-wishers).

م غ ص
مغص *maɣaṣ [1] (u)* /vi/ to be afflicted with cramps or colic

(of the stomach or kidneys). *baṭn-i b-tumʏuṣ (ɛalayya)* I've got a stomach-ache. - vn *maʏaṣ, maʏaṣaan*; ava *maʏṣaan*.
مغص *maʏaṣ*[2] /n/ colic, stomach cramps. ‖*maʏaṣ kalawi* renal colic.
مغصة *maʏṣa* /n pl *-aat*/ an attack of colic.
مغّص *maʏʏaṣ* **1** /vi/ to be affected by (severe) colic. *lamma baṭn-u maʏʏaṣit raaḥ bi-surɛa lid-duktoor* when he got severe stomach cramps he went quickly to the doctor. **2** /vt/ to make colicky. - vn *tamʏiiṣ*; ava/pva *mimaʏʏaṣ*.
اتمغّص *ʔitmaʏʏaṣ* /vi/ to be made colicky. - iva *mitmaʏʏaṣ*.

م غ ن ط see also – م غ ن ط
مغنط *maʏnaṭ* /vt/ to magnetize. - vn *maʏnaṭa*; ava/pva *mimaʏnaṭ*.
اتمغنط *ʔitmaʏnaṭ* /vi/ to be magnetized. - iva *mitmaʏnaṭ*.

– م غ ن ط
مغنطيس *maʏnaṭiis* (also *maʏmaṭiis*) <Gr *magnêtês*> /n/ magnet.
مغنطيسي *maʏnaṭiisi* /adj/ magnetic. ‖*ʔit-tanwiim il-maʏnaṭiisi* hypnosis. see further under م غ ن ط

[1] م ق ت
مقت *maqat ʔu)* /vt/ to cause (health or a general situation) to deteriorate. - vn *maqt, maqataan*; ava *maaqit*; pva *mamquut*.
مقت *maqt* /n/ hatred.
مقتة *maqta* /n/ gloominess, moodiness.
اتمقت *ʔitmaqat* /vi/ passive of *maqat*. - iva *mitmiqit*.

[2] م ق ت see و ق ت : *miqaat, miqaati*

– م ق د و see – ب ق د و : *maqduunis*

م ق ق
مقّق *maqqiq* **1** /vt/ to strain (the eyes). ‖*maqqiq ɛenee-na min kutr il-intizaar* he made us wait for him a hell of a long time. **2** /vi/ to pore (over s.th.), give close attention (to s.th. written). *ʔinta bi-tmaqqiq fig-gawaab leeh* why are you scrutinizing the letter? - vn *tamqiiq*; ava/pva *mimaqqiq*.
تمقيقة *tamqiiqa* /pl *-aat*/ instance noun of *tamqiiq*.
اتمقق *ʔitmaqqiq* /vi/ to be or become strained (of the eyes). - ava/iva *mitmaqqiq*.

م ق ل see [1] ق ل ى : *maqla, miqla*

م ك ء ى ل
ميكائيل *mikaʔiil* (also *miikaaʔiil*) /prop n/ **1** male given name. **2** the archangel Michael.

م ك ت ت
ماكيت *makitt* <Fr *maquette*> /n pl *-aat*/ *[print]* dummy lay-out.
ماكيتة *makitta* = *makitt*.

م ك ر
مكر *makar (u)* /vi/ to act with deceit. *xalli baal-ak minnu la-yumkur ɛaleek* (or *biik*) be careful lest he take you in. - vn *makr*; ava *maakir*.
مكرة *makra* /inst n, pl *-aat*/ a deceitful trick.
مكّار *makkaar* /adj */ cunning, deceitful, sly.
أمكر *ʔamkar* /el/ more/most cunning, deceitful or sly.
اتمكر *ʔitmakar* /vi/ (impersonal) passive of *makar*. *laazim itmakar ɛaleek* you must have been taken in. - iva *mitmikir*.

– م ك ر ف
مكرفون *mikrufoon, makrafoon* <Fr> /n pl *-aat*/ **1** microphone. **2a** loudspeaker system. *ṣoot-u ɛaamil wala l-mikrufoon* his voice blares more than a loudspeaker. **2b** loudspeaker (e.g., of a radio).

م ك ر و ب
مكروب *mikroob, makroob* <Fr *microbe*> /coll n, pl *-aat*/ germ(s), microbe(s).

م ك ر و ن
مكرونه *makaroona* <It *maccheroni*> /n/ pasta. ‖*makaroona xawaatim* (or *maqṣuuṣa*) macaroni.

م ك س ى ك
المكسيك *ʔil-maksiik* <Fr> /prop n/ Mexico.
مكسيكى *maksiiki* **1** /adj */ Mexican. **2** /n */ a Mexican.

[1] م ك ك
مكّة *makka* /prop n/ Mecca.
مكّى *makki* /adj/ pertaining to Mecca. *ʔil-ḥaram il-makki* (1) area around Mecca considered sacred. (2) the Kaaba Mosque.

[2] م ك ك
مكّوك *makkuuk* /n pl *makakiik, makaaki*/ **1** *[text]* shuttle. ‖*ɛaamil zayy il-makkuuk* he rushes to and fro. **2** bobbin (of a sewing machine). ‖*firiit makkuuk* gathering tape (for curtains).

م ك ن [1]

مكن *mukn↓* /adj invar/ solid (of quality), sound. *raagil mukn* a sterling fellow. *ʕakla mukn* a great meal. *ɛalqa mukn* a sound beating.

مكّن *makkin* /vt/ to enable, give (s.o.) the upper hand. *makkin-ni ʕaxrug* he enabled me to go out. *ṣaaḥib zayy[i] ma-nta ɛaayiz bass[i] ma-tmakkin-f[i] ḥadd[i] minnak* make friends as you wish, but don't let anyone get a hold on you. ‖*makkinit-u min nafs-a-ha* she gave herself to him. - vn *tamkiin*; ava/pva *mimakkin*.

اتمكّن *ʕitmakkin* /vi/ to be enabled, manage to gain supremacy. *ʕitmakkin bi-makr-u min ɤiff-a-ha* he was enabled by his cunning to cheat her. *ʕitmaskin li-ɤaayit ma titmakkin [prov]* ≈ fawn and beg until you get your chance. - vn *tamakkun↑*; ava *mitmakkan*.

أمكن *ʕamkan (yimkin)* **1** /vt/ it was (is) possible for. *ma-yimkin-haa-f tiftiri waaḥid gidiid* it isn't possible for her to buy a new one. *yimkin-ni ʕanaam* is it possible for me to sleep? **2** /vi/ it was (is) possible. *ʕiza ʕamkan* if possible. *yimkin miraat-u b-tifrab sagaayir* perhaps his wife smokes. *huwwa yimkin taɛbaan* perhaps he's sick. - vn *ʕimkaan*; ava *mumkin*.

إمكان *ʕimkaan↑* /n/ **1** capability, power. *ʕiɛmil kull illi f-ʕimkaan-ak* do all that is in your power. **2** possibility.

إمكانيّة *ʕimkaniyya* /n pl *-aat*/ **1** capability. *di ṣaɛba fooq ʕimkaniyyit if-fubbaan* this is too difficult for the young. **2↑** possibility. — *ʕimkaniyyaat* /pl n/ **3** facilities. *ʕis-sinima l-maṣriyya taɛbaana ɛaʃaan ma-fii-ʃ ʕimkaniyyaat* Egyptian cinema suffers because there are no facilities.

ممكن *mumkin* **1** /adj/ possible. *kull iṭ-ṭuruq il-mumkina* all possible ways. **2** modal of possibility. *miʃ mumkin tiigi n-nahar-da* she cannot come today. *mumkin tiddii-ni fikra ɛanha* can you give me an idea of it?

م ك ن [2]

مكنة *makana* <It *macchina*> /unit n, pl *-aat*/ **1** machine, instrument. *makanit xiyaaṭa* sewing machine. *makanit (ḥilaaqa)* safety razor. ‖*katab ɛal-makana* to type. - *makana ɛarabi* an Arabic typewriter. **2** power-driven machine. *makanit in-nasiig* power loom. *makanit mayya* powered water-pump. *makanit markib* ship's engine.

مكن *makan* /coll n/ mechanical instruments, machines, machinery.

ماكينة *makiina* /n pl *-aat*/ machine, machinery. *ɛaamil makinaat iṭ-ṭuruq* road-machinery operator.

م ك ن [3] see ك و ن : *makaan*

(م ك ن ى –)

ميكانيكى *mikaniiki* <It *meccanico*> **1** /adj/ mechanical, mechanized. ‖*muʃaah mikanikiyya* armoured troops. **2** /n pl *-yya*/ mechanic, technician. *mikaniiki ɛarabiyyaat* car mechanic.

ميكانيست *mikaniist* <Fr *mécaniste*> /n/ *[theat]* technical director.

م ك ى ا ج

مكياج *mikyaaj* or *makyaaj* <Fr *maquillage*> /n/ make-up, cosmetics. *ḥaṭṭit mikyaaj* she put on make-up.

م ك ى ى ر

ماكيير *makyiir* <Fr *maquilleur*> /n pl *-aat*/ make-up man.

م ل ا

ملا *mala[t]: ɛala mala wiff(-u)* hurriedly and under constraint. *lamma smiɛt[i] ʕinn if-faqqa nḥaraqit geet gary[a] ɛala mala wiff-i* when I heard that the flat was on fire, I rushed off just as I was. *ga l-ɛaskari xad-u l-qism[a] ɛala mala wiff-u* the policeman came and bundled him off to the station.

م ل ا ن

ملانة *malaana* /coll n/ green chick-pea(s).

م ل ء see م ل ى

م ل ب ن see ل ب ن : *malban*

م ل ت و ف

مولوتوف *mulutoof: qumbula mulutoof* Molotov cocktail.

م ل ت و ن

ملتون *militoon* <Fr *molleton*> /n/ table felt.

م ل ح

ملح *malḥ* /n/ **1** salt. ‖*malḥ ingiliizi* Epsom salts. - *ɛeef wi-malḥ* true friendship (reference to the sharing of a meal being a sign of true friendship). - *tiruff il-malḥ[i] ma-yinzil-ʃ* (the place is so crowded) if you threw salt it wouldn't land. - *zayy il-malḥ[i] maḥfuriin fi-kull[i] feeʔ* ≈ poking their noses into everything. - *ḥuṭṭ[i] f-ɛeen-ak ḥaṣwaayit malḥ* ≈ have some shame! **2** *[rur]* chemical fertilizer. — /pl *ʕamlaaḥ*/ **3↑** mineral salt.

ملحة *malḥa* /unit n, pl *-aat*/ piece of coarse salt. ‖*malḥa f-ɛeen illi ma-yṣalli ɛan-nabi* a grain of salt in the eye of him who refuses to bless the Prophet (a formula of

protection against the evil eye, all who hear it being expected to bless the Prophet, unless they be the one with the eye). - *ʕaarif malḥit...* always picking on..., as in *leeh ʃinta ʕaarif malḥit il-wad-da* why are you always picking on this boy?

ملحاية *malḥaaya = malḥa.*

ملاحة *milaaḥa↑* /n/ navigation.

ملوحة *muluuḥa* /coll n/ **1** salted pickled fish (a specialty of Upper Egypt). **2** saltiness.

مليح *miliiḥ, maliiḥ↑* **1** /adj pl *milaaḥ*/ good, nice. *ʃil-maliiḥ ma-yikmal-ʃ [prov]* ≈ nobody is perfect. **2** *milaaḥ* /pl n/ chicks. *la yirabbi l-milaaḥ ʃilla l-milaaḥ [vendor's cry]* only nice people keep chicks.

ملّاحة *mallaaḥa* /n pl *-aat*/ salt cellar.

مالح *maaliḥ* /adj */ salty. (*ʃil-baḥr) il-maaliḥ* the sea. ‖*kalaam maaliḥ* coarse language. - *ʕafʕ-u maaliḥ [mus]* he plays (on a stringed instrument) slightly out of tune (by pressing the strings inaccurately).

موالح *mawaaliḥ↑* /pl n/ citrus fruit(s).

ملّح *mallaḥ* /vt/ **1** to salt. — /vi/ **2** to become salty. **3** to lose strength or effectiveness (of batteries, solutions etc.). - vn *tamliiḥ*; ava/pva *mimallaḥ*.

اتملّح *ʃitmallaḥ* /vi/ to be salted. - iva *mitmallaḥ*.

م ل خ

ملخ *malax (u)* /vt/ **1a** to uproot. **1b** to dislocate. *kitf-i mamluux* my shoulder is dislocated. **2** to put forth (leaves etc.). *ʃil-ʕuud bi-yumlux if-furraab* the stem puts out inflorescences. — /vi/ **3** to sprout, burgeon. - vn *malx, malaxaan*; ava *maalix*; pva *mamluux*.

ملخة *malxa* /pl *-aat*/ instance noun of *malx*.

اتملخ *ʃitmalax* /vi/ **1a** to be uprooted. **1b** to be dislocated. **2** to be caused to sprout (of leaves etc.). - ava/iva *mitmilix*.

ملّخ *mallax* /vt/ to uproot successively. *bi-nmallax ir-ruzz* we pull up the rice plants (one by one). - vn *tamliix*; ava/pva *mimallax*.

م ل خ ل خ

ملخلخ *muluxlux: ya muluxiyyit il-muluxlux* cry of the *muluxiyya* vendor.

م ل خ ي

ملخيّة *muluxiyya* <Gr *molokhê*> /coll n/ Jew's mallow (Corchorus olitorius).

م ل ر ي ا

ملاريا *malarya* <prob It> /n/ malaria.

م ل س

ملس *malas[1] (i)* /vt/ *[agric]* to draw a bundle or ball of mud and straw through (an irrigation ditch) to smooth and seal the sides against seepage. - vn *mals, malasaan, miliis, milaasa*; ava *maalis*; pva *mamluus*.

ملس *malas[2]* /n/ **1** Austrian crepe (fabric). **2** wrap, *milaaya* of Austrian crepe (worn by women).

ملس *milis* /adj */ sly, sneaky. *raagil milis* a slippery character.

أملس *ʃamlas* /adj, fem *malsa*, pl *muls*/ smooth. *burtuqaan ʃamlas* smooth-skinned oranges.

ملّاس *mallaas* /n/ muddy ball of straw drawn through an irrigation ditch to smooth and seal the sides against seepage.

اتملس *ʃitmalas* /vi/ passive of *malas[1]*. - iva *mitmilis*.

ملّس *mallis* /vi/ **1** to make a stroking motion. *mallis ʕala daqn-u* he stroked his beard. ‖*law mallis ʕaleek if-feex ḥa-tʃiib* if the sheikh blessed you (with his hand) you would recover. **2** to engage in mollycoddling. - vn *tamliis*; ava *mimallis*.

اتملّس *ʃitmallis* /vi/ (impersonal) passive of *mallis*. *ʃil-waad da ṭuul ma b-yitmallis ʕalee miʃ naafiʕ* as long as the boy is mollycoddled he'll never make the grade. ‖*ʃin-naas itmallisit bii* the people got him to bless them (with his hand). - iva *mitmallis*.

م ل ص

ملص *malaṣ (u)* **1** /vt/ to wrench out. *ḥ-amluṣ widaan-ak* I'll pull off your ears! **2** /vi/ to slip away, escape. *malaṣ minhum wi-hirib* he escaped from them and got away. - vn *malṣ, malaṣaan*; ava *maaliṣ*; pva *mamluuṣ*.

اتملص *ʃitmalaṣ* /vi/ to be wrenched out. - iva *mitmiliṣ*.

ملّص *mallaṣ* /vt/ to pull off or away. - vn *tamliiṣ*; ava/pva *mimallaṣ*.

اتملّص *ʃitmallaṣ* /vi/ to be pulled or pull oneself off or away. - ava/iva *mitmallaṣ*.

[1] م ل ط

مالطة *malṭa* /prop n/ Malta. ‖*bi-yiddan fi-malṭa [prov]* (he's calling to prayer in Malta) ≈ he is flogging a dead horse. - *baʕd[i] xaraab malṭa* ≈ (closing the stable door) after the horse has bolted.

مالطي *malṭi* **1** /adj */ Maltese. ‖*ḥamaam malṭi* large type of pigeon raised for food. - *(diik) malṭi* a cock with a long featherless neck. - *ḥumma malṭiyya* undulant fever. **2** /n */ a Maltese. **3** /n, no pl/ the Maltese language.

[2] م ل ط

ملط *malaṭ (u)* /vt/ **1** to strip off (clothes, feathers, skin

etc.). *malaṭt^{i} ḥduum-i w-naṭṭeet fil-baḥr^{i} waraa* I threw off all my clothes and jumped in the sea after him. **2** to strip bare. *malaṭit diraɛ-ha mil-ɛagiin* she scraped her arms clean of dough. — /vi/ **3** to become skinless. *wiff-i malaṭ miʃ-ʃams* my face peeled from exposure to the sun. **4** to come off (of skin). *gild-i malaṭ* my skin peeled. - vn *malṭ, malaṭaan*; ava *maaliṭ*; pva *mamluuṭ*.

ملط *malṭ* /adj invar/ bare, naked. *ɛiryaan (zalṭ^{i}) malṭ* stark naked. ‖*ma-tgib-ʃ is-sarg - ḥ-arkab malṭ* don't bring the saddle, I'll ride bareback.

اتملط *ʔitmalaṭ* /vi/ **1** to be stripped off. **2** to be stripped bare. - iva *mitmiliṭ*.

ملّط *mallaṭ* /vt/ to strip, lay bare. *ʔiliɛu ɛalee l-ḥaramiyya mallaṭuu min kull illi ɛalee* the robbers attacked him and stripped him of all he had. - vn *tamliiṭ*; ava/pva *mimallaṭ*.

اتملّط *ʔitmallaṭ* /vi/ to be stripped, be laid bare. - iva *mitmallaṭ*.

[3] م ل ط see م ط ل: *maaliṭ*

م ل ع ن see also ل ع ن

ملعن *malɛan* /vt/ to cause to be rascally. *dalaɛ ʔumm-ak fiik huwwa lli malɛan-ak* it is your mother's spoiling you that's made you so naughty. - vn *malɛana*; ava/pva *mimalɛan*.

اتملعن *ʔitmalɛan* /vi/ to be or become rascally. *ʔitmalɛan min ṣuɣr-u* he's been up to no good since he was small. - ava *mitmalɛan*.

م ل ق

ملقة *malaqa* **1** /n/ open space, waste land (used, e.g., for games etc.). **2** /adj invar/ spacious. *beet malaqa* a very large house.

م ل ك

ملك *malak^{1}, milik (i, u)* /vt/ **1** to possess. *yimlik beet* he owns a house. ‖ *ʔimlik waqt-ak* get a move on (so that you will still have time, i.e. be on time). **2** to get a grip on. *law milikt-u ḥ-addii-lu ḥittit ɛalqa* if I get my hands on him, some beating I'll give him! *ʔimlik ʔaʂʂaab-ak* steady yourself! *min il-manzar ma-mlikt^{i}-ʃ nafs-i* the sight made me lose all self-possession. **3** /preverb/ to be able to. *min iz-zaḥma ma-milikt^{i}-ʃ ʔaḥuṭṭ^{i} ʔiid-i f-geeb-i* it was so crowded I couldn't get my hand into my pocket. - vn *milk, mulk*; ava *maalik*; pva *mamluuk*.

ملك *milk* /n pl *ʔamlaak*/ **1** private property. *ʔil-ḥuṣaan da milk-i* I own this horse. *ṣaaḥib milk* property owner. *ṣaaḥib il-milk* the landlord. *raagil milk^{i} nafs-u* a man who is his own master. **2** *ʔamlaak* /pl n/ lands, landed property. *ḍariibit ʔamlaak* property tax.

ملك *mulk* /n/ **1** reign, kingship. *wi-baɛdeen faruuq xad il-mulk^{i} baɛd abuu* then Farouk ascended the throne after his father. **2** *ʔil-mulk* **2a** the universe. *xalli l-mulk^{i} lil-maalik* ≈ leave things be! ‖*ṣaaḥib il-mulk* God. **2b** the Heavens, one of the five parts of the Sufi cosmos. **3** a thing *sui generis*, a world unto itself. *ʔir-ragil-da mulk* that man lives in a world of his own.

مالك *maalik* /n pl *mullaak*/ proprietor, owner. ‖*maalik il-mulk* Sovereign of the universe (epithet of God).

المالكى *ʔil-malki: ʔil-mazhab il-malki* one of the four schools of Muslim jurisprudence (named after Malik b. Anas).

مملوك *mamluuk* /n pl *mamaliik*/ white male slave, mameluke.

مملوكى *mamluuki* /adj/ mameluke.

ملكيّة *milkiyya* /n/ ownership.

ملك *malak^{2} = malaak*.

ملكة *malaka* /n pl *-aat*/ knack, aptitude. *malakit il-ḥifẓ* the ability to learn by heart.

ملك *malik* /n pl *miluuk, muluuk*/ king. ‖*malik walla ktaaba* heads or tails?

ملكة *malika* /n pl *-aat*/ queen.

ملكى *malaki* /adj/ royal, regal. *niẓaam malaki* monarchical system. ‖*laabis malaki* wearing plain clothes, out of uniform.

ملوكى *muluuki* or *miluuki* /adj invar/ marvellous, magnificent. *ʔil-ḥafla kaanit miluuki* it was a marvellous party. ‖*ɛinab miluuki* variety of grape having a tough skin of a mottled reddish-green colour.

ملاك *malaak* /n pl *malayka*/ angel. *ʔiza ḥaḍarit il-malayka ẓahabit if-ʃayaṭiin [prov]* when angels enter devils leave (and vice versa). ‖*malaykit-u xufaaf* ≈ he has a cheerful disposition. - *malaykit-u haffit* I have a feeling he's about to arrive. - *bi-yaakul ruzz^{i} maɛa l-malayka* ≈ he's fast asleep.

ملّاكى *mallaaki* /adj invar/ privately-owned. *ɛarabiyya mallaaki* a private car.

مملكة *mamlaka* /n pl *mamaalik*/ kingdom.

ملكوت *malakoot, malakuut* /n/ **1** God's creation. *faakir ʔinnak ḥa-tɣaddil il-malakoot* do you think you can set the whole world to rights? ‖*malakuut allaah [Chr]* the Kingdom of God. - *hina malakoot* everything's topsy-turvy here, it's a madhouse. - *ɛayʃa f-malakoot taani* she lives in a dream world. **2** *ʔil-malakuut* the seven Paradises, one of the five parts of the Sufi cosmos.

اتملك *ʔitmalak* /vi/ passive of *malak^{1}*. - iva *mitmilik*.

ملّك *mallik* /vt/ **1a** to give (s.o.) possession of. *ʔil-ḥukuuma mallikit kull^{i} fallaaḥ xamas fadadiin* the

government gave every peasant possession of five feddans. **1b** to give ownership of. *ʕil-ḥukuuma mallikit xamas fadadiin li-kull[i] fallaaḥ* the government gave five feddans to every peasant. **2** to cause (s.o.) to gain the upper hand. *ma-tmallikuu-ʃ minnak* don't let him get a hold on you! - vn *tamliik*; ava ***mimallik***.
تمليك *tamliik* /n/ ownership. ‖*faqqa tamliik* a privately owned apartment (as opposed to one for which rent is paid).
اتملّك *ʕitmallik* **1** /vt/ to be given possession of. — /vi/ **2** to be given in ownership. *ʕil-ʕarḍ[i] b-titmallik lil-fallaḥiin* the land is given to the peasants to own. **3** to gain supremacy. *ʕil-ɣaḍab itmallik minnu* anger got the better of him. - vn *tamalluk*↑; ava/pva *mitmallik*.
امتلك *ʕimtalak* /vt/ to possess, own. *ʕumm-i timtilik xamas fadadiin* my mother owns five feddans. - vn *ʕimtilaak*; ava *mimtilik*; pva ***mumtalak***.
ممتلكات *mumtalakaat* /pl n/ possessions.

م ل ك ا ن

ملكان *malakaan* /coll n/ slots into which the slats of a shutter are fitted. *ʕiʒmil il-ɢaayim da malakaan* make that upright slotted (to hold slats). *waraɢ malakaan* slats (of a shutter).

[1] م ل ل

ملّ *mall (i)* **1** /vi/ to become bored. *ʕit-tamsiliyya xallit-ni ʕamill* the play bored me. **2** /vt/ to find boring. *malleet ir-rutiin* I found the routine boring. - vn *malal, malalaan*; ava *maalil*; pva ***mamluul***.
ملل *malal* /n/ boredom.
ممل *mumill* /adj */ boring.
اتملّ *ʕitmall* /vi/ **1** to be found boring. **2** (impersonal) passive of *mall* 1. *kalaam-u ma-yitmall[i]-ʃ minnu* his conversation is not boring. - iva ***mitmall***.

[2] م ل ل

ملّة *milla, mulla*[1]↓ /n pl *milal*/ **1** religion. ‖*raagil ma-luu-ʃ milla* a ruthless man. **2** religious community.
ملّي *milli*[1] /adj/ pertaining to a religious community. *maglis milli [Chr]* council of laymen which governs internal, financial and administrative affairs of the church.

[3] (م ل ل)

ملّة *malla*[1] /n/ warmth in an oven away from, or after the extinguishing of, the fire.
مول *mull* <Fr *bémol*> /n/ *[mus]* flat. *nuṣṣ[i] mull* quarter tone flat. - also *bimull*.

ملّة *mulla*[2] /n pl *mulal, mullaat*/ that part of a bed on which the mattress rests, mattress base.

م ل ل ي

ملي *milli*[2] <Fr *millimètre*> /n/ millimetre. ‖*bil-milli* precisely, as in *ḥ-aqabl-ak is-saaɢa tiṣɢa bil-milli* I'll meet you at nine o'clock on the dot.

م ل ل ى م

مليم *malliim* (also *malliin*↓) <Fr *millième*> /n pl *malaliim, malaliin*/ one tenth of a piastre, millime.

م ل م see م ل ل ى م : *malliim*

م ل م ق

ملمق *malmaq* /vt/ to splash, slop. *malmaq mayya ktiir wi-huwwa b-yiɣsil ʕidee* he splashed a lot of water around while washing his hands. - vn *malmaqa*; ava/pva *mimalmaq*.
اتلمق *ʕitmalmaq* /vi/ to be splashed, be slopped. - iva *mitmalmaq*.

م ل م ل

ململ *malmil* /vt/ to cause to become restless or fidgety. - vn *malmala*; ava *mimalmil*.
اتلمل *ʕitmalmil* /vi/ to become or be made restless or fidgety. - ava/iva *mitmalmil*.

[1] م ل ن see م ل ا ن : *malaana*

[2] م ل ن see م ل ل ى م : *malliin*

[1] م ل و

ملوة *malwa*[1] /n pl *-aat, malaawi*/ dry measure equivalent to one fourth of a *keela* (q.v.).

[2] م ل و see [1] م ل ى : *malw, malwa*[2]

[1] م ل ى

ملا *mala*[2] *(a)* /vt/ **1** to fill. *ʕimla l-ɢulla mayya* fill the pitcher with water. *mala l-xanaat* he filled in the blanks. ‖*ʕana raagil il-beet wi-laazim ʕamla markaz-i* I'm the man of the house and I must live up to my position. *raagil malw[i] hduum-u* a respected man. - *mala l-ɢeen* (1) to be worthwhile, as in *ʕiza kunt[a] ɢaayiz tiʒmil ḥaaga xallii-ha timla l-ɢeen* if you want to do something, let it be worthwhile. (2) to satisfy, as in *huwwa-na miʃ maali ɢeen-ak walla ʕeeh* ≈ aren't I good enough for you, or what? *ʕil-bani ʕaadam ma-yimlaa-ʃ ɢeen-u ʕilla*

t-turaab [prov] ≈ only the grave can put an end to man's greed. **2** to restring (e.g., a sieve). *ʕis-silk[1] ya-lli timli l-manxul [vendor's cry]* (here is) mesh, you who would restring your sieve! **3** to wind (a watch or clock). **4** to cut (a gramophone record). *ħa-yimla ʕusṭuwaana* he will cut a disc. - vn *maly, malw, malayaan*; ava *maali*; pva *mamli*.

ملو *malw* /n/ quantity sufficient for one filling. *malw[1] kubbaaya* a glassful.

ملوة *malwa[2]* /pl *-aat*/ instance noun of *malw*. *ʕil-maqrab ɛaayiz malwa gdiida* the racket needs re-stringing.

ملية *malya* = *malwa*.

ملىء *mali* /adj */ comfortably-off, wealthy.

مليان *malyaan* /adj */ **1** full. *ʕif-faariɛ malyaan naas* the street is full of people. ‖*ɢalb-i malyaan minnu* I've had enough of him. - *yiḍrab fil-malyaan* he shoots to kill. - *kalaam fil-malyaan* meaningful words. **2** plump. **3** rich, wealthy.

ملاّ *malla[2]* /n pl *mallayiin*/ **1** water carrier who fills receptacles with water for householders without a mains supply or pump. **2** *[rur]* mosque employee whose job it is to pump-fill the water-tank of the mosque.

ملاية *milaaya* /n pl *-aat, mily, mili*/ **1** bedsheet. *milaayit liḥaaf* loose covering for a quilt. **2** (also *milaaya laff*) black wrap worn by women in public (see Pl.F, 17). ‖*faraʃ il-milaaya li-* to abuse publicly and vulgarly, as in *ʕiskut la-tifriʃ-lak il-milaaya* keep quiet or she will give you a slanging!

اتملى *ʕitmala* /vi/ passive of *mala[2]*. - iva *mitmili*.

ملّى *malla[3]* /vt/ *[agric]* to irrigate by flooding. *bi-nmalli l-ʕarḍ[1] tamliyya xafiifa muddit ʕusbuɛeen* we flood the ground lightly for two weeks. - vn *tamliyya*; ava *mimalli*.

اتملّى *ʕitmalla[1]* /vi/ to be irrigated by flooding. - iva *mitmalli*.

انتلى *ʕintala* /vi/ **1** to become full. **2** to be filled. *ʕil-kubbaaya ntalit li-ḥabbit ɛen-ha* the glass has been filled to the brim. - ava/iva *mintili*.

م ل ى [2]

إملاء *ʕimla, ʕimlaaʔ* /n pl *ʕamaali*/ dictation.

ملّى *malla[4]* /vt/ to dictate (to). *mallii-lu d-dars* dictate the lesson to him. *mallii-ni* dictate to me! - vn *tamliyya*; ava *mimalli*.

اتملّى *ʕitmalla[2]* /vi/ to be dictated. - iva *mitmalli*.

م ل ى [3] see **م ل ا** : *mala[1]*

م ل ى ن –

مليونير *milyuneer* <prob Fr> /n pl *-aat*/ millionaire.

م ل ى و ن

مليون *milyoon, malyuun* <Fr> **1** /num pl *malayiin*/ million. **2** *ʕil-milyoon* /adj invar/ the millionth.

م م

مم *mam* (also *mammah*) <poss Copt> *[children]* **1** /n/ food. **2** /interj/ eat! - also *ʕamm, hamm*.

م م ب ر –

ممبريطة *mambariiṭa, mambareeṭa* <perh It *tamburetto*> /n pl *mambaraayiṭ*/ porthole.

م م ب ن –

ممبنوس *mambanoos* <perh T *bombires* from It> /n/ *[naut]* bowsprit.

م م ب ز –

ممبوزيا *mambuzya* /coll n/ Burdekin plum(s).

م م م ا

مما *mimmaʔ* /conj/ **1** a thing or fact which. *ʕahmalu f-tanfiiz il-marḥala l-ʕuula wit-tanya mimma ʕadda l-taʕxiir il-marḥala t-talta* they were negligent at the first and second stages, which led to the delaying of the third. **2** among the things or facts which. *duxul-hum fi-ḥugrit it-taftiiʃ mimma yitɛaarid maɛa ʕigraʕaat il-ʕamn* it was contrary to security regulations for them to enter the inspection chamber. ‖*mimma lazza wa-ṭaabʔ* ≈ the choicest of food.

م م م ٥ see **م م** : *mammah*

م ن [1]

من *min[1]* /often shortened before def art to *mi-*; w pron suff *minni, minnak, minnik, minnu, minha/minnaha, minna/minnina, minku/minnuku, minhum/minnuhum*/ preposition indicating **1a** point of origin or departure, tangible or intangible. *ga mil-balad* he came from the village. *dafaɛ talatiin gineeh min geeb-u* he paid thirty pounds out of his own pocket. *ṣaḥḥaa-ni min ɛizz[1] noom-i* he woke me from deep sleep. *ʕiṭlaɛ min ɛandak* come out from where you are! *ʕinzil min ɛas-sillim* come down off the ladder! *bi-yaaxud min bariiza w-ṭaaliɛ* he charges (anything) from ten piastres upwards. ‖*ʕismaɛ ya fandi minnak lu* listen, all of you (i.e. from first to last)! - *bi-yitgawwizu minhum fiihum* they marry within the family. - *la minnu wala kfaayit farr-u* not only does he make no helpful contributions, he does not even spare us his evil-doing. - *wiqiɛ min ṭuul-u* he fell down flat. **1b** passage through. *taɛaala min hina miʃ*

min hinaak come through here, not through there! *ʕiʃ-ʃams[i] ma-bi-tʇaddii-ʃ minha* sunlight does not pass through it. **2a** relation between past and present time. *min talatiin sana* thirty years ago. *kunt[i] hina min zamaan* I was here a long time ago. *rawwaḥ min nuṣṣ[i] saaʇa* he went home half an hour ago. **2b** duration from a point in past time up to the present. *min talatiin sana* for thirty years. ʕana *hina mīn zamaan* I've been here for a long time. *min ṣuvr-u* since his childhood. *bi-yiftaval muhandis min ʇiimit mudda* he's been working as an engineer for some time. **2c** incipience. *bi-yiigi min ṣabaaḥit rabb-i-na* he comes first thing in the morning. *bi-yiṣḥa mil-ʕadaan* he gets up at dawn. **3** cause or reason. *maat min il-ʇaṭaʃ* he died of thirst. *ʇamalt[i] da min vulb-i* I did that out of frustration. *ziʇlu minnu* they were upset with him. **4** comparative relationship. *hiyya l-burtuqaana ʕakbar min il-baṭṭiixa* is an orange bigger than a water-melon? ʕaktar *min nuṣṣ[i] saaʇa* more than half an hour. **5** partitive relationship. *ḥagar garanīt minnu ʕaḥmar wi-minnu ʕiswid* there is red granite and black. *min (ḍimn[i])* ʕasbaab *il-ḥadsa* among the reasons for the accident. *ʇadad kibiir min banaat il-ʕayyaam di* a great number of today's girls. ‖ *ʕin-nahar-da sabaʇtaaʃar minnu* today is the seventeeth of the month. *-minnu bawwaab wi-minnu ʃayyaal* he is both doorman and porter. *-minnu fii* all in one, as in *siriir wi-kanaba minnu fii* a bed and a sofa all in one. *-... wa-llazi minnu* ... and what not, as in *baʇd it-taḥiyyaat wa-llazi minnu* after greetings and so forth. **6** derivational relationship. *gizam min gild il-ʁazaal* gazelle-skin shoes. *ʇamal mil-ḥabba ʇubba* ≈ he made a mountain out of a molehill. **7** reference, regard or consideration. *ḥaasib miʃ-ʃams* beware of the sun! *maḥruus mil-ʇeen* protected from the evil eye. *xalli baal-ak mil-ʕuṣuul* behave properly! *ʇeen-ak mil-baab* keep your eye on the door! *widn-ak mi-lli bi-yquluu* lend an ear to what they say. **8** lack of control over a circumstance. ʕil-ḥuṣaan *ramaḥ minnu* the horse bolted with him. ʕil-ʇaṣfuura *maatit minni* the bird died on me.

منين *mineen[1]* /interrog adv/ whence? *humma mneen* where are they from? *ḥa-niftiri xuḍar-na mneen* where shall we buy our vegetables from? ‖ ʕana *ḥ-alaʇii-ha mneen walla mneen* ≈ I've got troubles on every hand. *-ḥineen wi-mneen* see *ḥineen[2]*.

[2] م ن

من *min[2]* /rel pron/ he who, whoever. *min ʇaddim is-sabt[i] yilʇa l-ḥadd* ≈ the good you sow today you reap tomorrow.

م ن ب ا ر

ممبار، منبار *mimbaar* <T *mumbar*> /coll n, pl *manabiir*/ sausage(s) made of the lower end of intestines stuffed with rice and spices.

م ن ت ا ج

مونتاج *muntaaj* <Fr> /n/ montage.

م ن ت ى ر

مونتير *muntiir, munteer* <Fr *monteur*> /n pl *-aat*/ *[cin]* editor, cutter.

م ن ج

منجه *manga[1]* /coll n/ mango(es).

منجاية *mangaaya* /unit n, pl *-aat*/ a mango.

م ن ج ر ي

منجريّة *mangariyya* <prob Engl slang *mungaree*> /n/ *[joc slang]* food.

[1] (م ن ج ل)

منجل *mangal* <perh Copt> /n pl *manaagil*/ type of large sickle.

منجلة *mangala* <Gr *mengelê*> /n pl *manaagil*/ *[mech]* bench vice.

[2] م ن ج ل see **ء ن ج ى ل**: *mangaliyya*

م ن ج ه

منجه *mangih* /vt/ to set (s.o. or s.th.) up well, provide (s.o. or s.th.) with elegance and luxury. *walad* ʕaaxir *mangaha* a swank kid. -vn *mangaha*; ava *mimangih*.

اتمنجه ʕitmaḥgih /vi/ passive of *mangih*. -iva *mitmangih*.

م ن ج ى

منجى *mangi* <prob Engl slang *mungy*> /n/ *[slang]* food.

يمنجى *yimangi* /vi/ he digs into the grub, he eats.

م ن ح

منح *manaḥ (a)* /vt/ to grant. -vn *manḥ*; ava *maaniḥ*; pva *mamnuuḥ*.

منحة *minḥa* /n pl *-aat, minaḥ*/ grant, award, scholarship.

اتمنح ʕitmanaḥ /vi/ to be granted. -iva *mitminiḥ*.

م ن خ see **ن و خ**: *manaax*

– م ن خ ل
منخوليا *manaxulya* <Gr *melankholia*> /n/ disturbance of the mind.

(م ن د ل)
مندل *mandal* /n/ *[magic]* contemplation of the surface of a reflecting liquid such as ink or oil (for the purpose of divination). *ḍarab* (or *ɛamal* or *fataḥ) mandal* to divine by this means. *ṣaaḥib mandal* one who practises this type of divination.
منداله *mindaala* /n pl *-aat*/ tamping-iron.

– م ن د ل
مندولين *manduliin* <Fr *mandoline*> /n/ **1** *una corda* pedal (piano). **2** mandoline.

م ن د ي ل
منديل *mandiil* /n pl *manadiil*/ **1** kerchief. *mandiil (raas)* triangular handkerchief (see Pl.F, 9). *mandiil (ʕiid)* handkerchief. **2a** fatty tissue covering the underbelly of an animal (e.g., sheep, cattle). **2b** membranous covering of the intestine.

(م ن ش)
منش *manʃ* <Fr *manche*> /n pl *-aat*/ sleeve. ‖*(baḥr) il-manʃ* the English Channel.
مونش *munʃ* /n/ *[text]* texturized filament.

م ن ش ت ت
مانشيت *manʃitt* <Fr *manchette*> /n pl *-aat*/ banner headline (in a newspaper).

– م ن ط ل see – ب ن ط ل : *manṭaloon*

م ن ظ ر see also ن ظ ر
منظرة *manẓara'* /vn/ showing-off, affecting superiority.
اتمنظر *ʔitmanẓar* /vi/ **1** to show off, swank. **2** to act in a superior manner. *ɛammaal yitmanẓar ɛala zumalaat-u leeh - huwwa ʔaḥsan minhum* why is he lording it over his friends? is he any better than they? - ava *mitmanẓar*.

م ن ع
منع *manaɛ (a)* /vt/ **1** to forbid. *manaɛ-ha mil-xuruug* he forbade her to go out. *mamnuuɛ it-tadxiin* no smoking. **2** to prevent. *ʔil-laff' b-yimnaɛ ir-ruṭuuba* wrapping keeps out the moisture. ‖*ḥubuub manɛ il-ḥaml* birth control pills. - vn *manɛ*, *manaɛaan*; ava *maaniɛ*; pva *mamnuuɛ*.

¶ *manaɛ ɛan* to keep (s.th.) away from (s.o. or s.th.). *ya ʔawliyyit allaah timnaɛu ɛannu l-ɛaks* saints of God, protect him from the work of bad spirits! - *manɛan li* in order to avoid. *ʔaḥsan nivayyar il-mawḍuuɛ manɛan liz-zaɛal* it is better to change the subject in order to avoid annoyance.
مانع *maaniɛ* /n pl *mawaaniɛ*/ obstacle, impediment. ‖*maaniɛ ṣada* rust preventer. - *ma-fii-ʃ maaniɛ* that's O.K., there's no objection, as in *ma-fii-ʃ maaniɛ yikuun ir-raagil mibarṭal-u* it's entirely possible that the man is bribing him. - *ɛandak maaniɛ* do you have any objection? - *ma-ɛandii-ʃ maaniɛ* I've no objection, it's O.K. by me. - *sibaaq il-mawaaniɛ [sport]* obstacle race.
مناعة *manaaɛa* /n/ **1** immunity (from a disease). **2** impermeability. *ʔiṭ-ṭibaaɛa bil-manaaɛa [text]* a batik type of printing.
امتنع *ʔitmanaɛ* /vi/ **1** to be forbidden. **2** to be prevented. - iva *mitminiɛ*.
امتنع *ʔimtanaɛ* /vi/ to abstain, refuse to have anything to do (with s.th.). *wi-hiyya ɛayyaana b-timtiniɛ ɛan il-ʔakl* she refuses to eat when she's sick. - vn *ʔimtinaaɛ*↑; ava *mimtiniɛ*.

– م ن ف ت
مانيفاتورة *manifatuura* <T *manifatura* from It> /n/ *[obsol]* **1** /coll n/ hand-woven fabric(s). **2** /pl *-aat*/ **2a** factory or workshop producing hand-woven goods. **2b** fabrics department (in a store).

– م ن ف س
منفستو *manafistu* <It *manifesto*> /n pl *-haat*/ bus conductor's ticket control sheet.

م ن ف ل ل
مانفلا *manafilla* <It *manovella*> /n pl *-aat*/ crank.

م ن ك ا ن
مانيكان *manikaan* <Fr> /n pl *-aat*/ **1** fashion model. **2** mannequin (dummy).

– م ن ل ج see also م ن ل و ج
منولوجست، منولوجست *munulugist* <Fr *monologuiste*> /n pl *-aat*/ entertainer who sings humorous *munulogaat* (q.v.), which he dramatizes with comic gestures and intersperses with jokes.

م ن ل ل
مانيلا *manilla* /prop n/ Manila. ‖*waraq manilla* manila paper. - *ḥabl' manilla* Manila hemp rope.

م ن ل ل ي
منيلي *manilli* /n/ support of a chair arm.

م ن ل و ج see also م ن ل ج –
منولوج *munuloog* <Fr *monologue*> /n pl *-aat*/ type of popular entertainment consisting of a solo song of indeterminate length and of varied themes characterized by a refrain of one or two lines which is repeated after each section.

م ن م ت ر
مانوميتر *manumitr* <Fr *manomètre*> /n pl *-aat*/ pressure meter, pressure gauge.

م ن ن [1]
منّ *mann[1] (i)* /vi/ **1** to disburse, bestow in a condescending fashion. **2** to enumerate favours one has done (for s.o.). *ʕil-mann[i] yifsid il-maʒruuf* reminding someone of the assistance you have afforded him spoils the good deed itself. - vn *mann*; ava *maanin*; pva *mamnuun*.
ممنون *mamnuun* /adj */ grateful, obliged.
ممنونيّة *mamnuniyya* /n/ gratefulness. ‖*bi-kull[i] mamnuniyya* with pleasure, as in *mumkin tisallif-ni ktaab-ak. - bi-kull[i] mamnuniyya* 'Could you lend me your book?' 'With pleasure.'
امتنّ *ʔimtann* /vi/ **1** to enumerate favours one has done (for s.o.). **2** to express one's gratitude for favours done. *ʔana mumtann[i] liik* I am grateful to you. - vn *ʔimtinaan*; ava *mumtann*.

م ن ن [2]
منّ *mann[2]* /coll n/ honeydew-producing species of aphis that attacks plants.

م ن و ر see [3] ن و ر: *munawra, minawra*

م ن و ى ش see ن و ش: *manawiifi*

م ن ى
منى *many, mani* /n/ semen.
منية *munya* /n pl *muna*/ desire, wish. *munyit il-ʔalb* heart's desire. *muna ʒeen-i* my greatest desire. *yoom il-muna* greatly-desired day.
أمنية *ʔumniya, ʔumniyya* /n pl *ʔamaani*/ wish.
منّى *manna* /vt/ to raise hopes in (s.o.). *mannaa-ni ygawwiz-ni bint-u* he raised my hopes that he would marry his daughter to me. ‖*ma-luu-ʃ ʒala rabb-i-na tamniyya* (he has no wish to ask of God) ≈ he has everything that anyone could wish for. - vn *tamniyya*; ava *mimanni*.
اتمنّى *ʔitmanna* /vi/ to wish. *ʔatmanna l-ʔarḍ[i] tinfaʔʔ[i] w-tiblaʒ-ni* would that the earth would split and swallow me up! ‖*ʔana b-atmanna ḍufr[i] min ḍawafr-ak* ≈ I would give anything to serve you. - ava *mitmanni*.
تمنّى *tamanna[1]* = *ʔitmanna*. - vn *tamanni*.
تمنّيات *tamanniyyaat* /pl n/ wishes. *tamanniyyaat-i ṭ-ṭayyiba* my best wishes.
استمنّى *ʔistimanna[1]* /vt/ to long for, yearn for. ‖*ʔil-waaḥid bi-yistimannaa-k ir-riḍa tirḍa* one is eager to satisfy your slightest wish. - ava *mistimanni*.

م ن ى ش
منيش *mineeʃ* <Fr *manège*> /n pl *-aat*/ ring (e.g., circus ring, ring for horse training).

م ن ى ك see also ن ى ك
اتمنيك *ʔitmanyik* /vi/ *[coarse]* to waste time, mess about, fuck around. - vn *manyaka*; ava *mitmanyik*.

م ن ى ن [1]
منين *mineen[2]* /n/ biscuit made of flour, clarified butter and salt, flavoured with sesame, fennel etc., and shaped into thin rectangles. - also *bineen*.

م ن ى ن [2] see [1] م ن: *mineen[1]*

م ه د
مهد *mahd* /n pl *muhuud*/ cradle.
مهّد *mahhid* /vt/ to prepare, set in order, pave (e.g., a way for s.o.). *mahhiduu-lak iṭ-ṭariiq wi-ʒaleek il-baaqi* they have prepared the way for you and the rest is up to you. - vn *tamhiid*; ava/pva *mimahhid*.
تمهيد *tamhiid* /n/ **1** preface (of a book). **2** *[mus]* unmetred musical introduction. **2** period of time between the raising of the conductor's baton and the beginning of a musical selection.
اتمهّد *ʔitmahhid* /vi/ passive of *mahhid*. - iva *mitmahhid*.

م ه ر [1]
مهر *mahr* /n pl *muhuur*/ money paid by a groom's family to the bride's as a contribution to the *gihaaz* (q.v.).

م ه ر [2]
مهر *muhr* /n pl *muhuur, muhúra*/ **1** colt. **2** *[gym]* small vaulting horse or buck.
مهرة *muhra* /n pl *-aat*/ filly.

م ه ر [3]
مهارة *mahaara* /n pl *-aat*/ skill.
ماهر *maahir* /adj * and pl *mahara*/ skilled.

م ه ر ا ن
ماهوران *mahuraan* /n/ *[mus]* name given to the note F (on the fifth line of the staff).

م ه ر ج ـ
مهرجان *mahragaan* <P *mihrgân*> /n pl *-aat*/ parade, festival, carnival.

م ه ق
مهق *mahaq (u)* /vt/ *[abus]* to cause to smirk. *ʔinta mamhuuq leeh - ma-fuft[i]-ʃ illi ḫaṣal* what the hell are you so happy about, didn't you see what happened? - vn *mahaqaan, mahq*; ava *maahiq*; pva *mamhuuq*.
مهقة *mahqa* /inst n, pl *-aat*/ a smirk.
اتمهق *ʔitmahaq* /vi/ to smirk. - ava *mitmihiq*.

م ه ك
مهك *mahak (u)* /vt/ to mash, purée (vegetables etc.). ‖*mara mamhuuka* a loose woman. - vn *mahk*; ava *maahik*; pva *mamhuuk*.
اتمهك *ʔitmahak* /vi/ passive of *mahak*. - iva *mitmihik*.
انمهك *ʔinmahak* = *ʔitmahak*. - iva *minmihik*.

م ه ل
مهل *mahl, mihl* /n/ respite, delay. *ʔil-filuus ɛala l-mahl* the money can wait. ‖*ɛala mahl-* without haste, as in *bi-yimʃi ɛala mahl-u* he goes at his own pace, *bi-yiṭlaɛ is-sillim ɛala mahl-u ɋawi* he takes ages to climb the stairs, *ɛala (ʔaɋall[i] min) mahl-ak* take your time! take all the time you want!
مهلة *muhla* /n pl *-aat, muhal*/ respite, delay. *ḫ-addii-k ʔaaxir muhla lid-dafɛ* I'll give you a last delay on the payment.
مهّل *mahhil* /vt/ to give (s.o.) extra time, give respite to. *mahhil-ni ʃwayya w-ʔana ʔasaddid illi ɛalayya* give me a little time and I'll pay my debt. - vn *tamhiil*; ava/pva *mimahhil*.
اتمهّل *ʔitmahhil* /vi/ 1 to give (extra) time (to s.o.), grant a respite (to s.o.). *ʔana tmahhilt[a] ɛalee ktiir* I've given him plenty of time. 2 to be given extra time, be granted a respite. - ava/iva *mitmahhil*.
أمهل *ʔamhal* /vt/ to allow (s.o.) time, give respite to. *ʔimhil-ni* give me time. ‖*(rabb-i-na) yimhil wa-la yuhmil [prov]* ≈ God may give respite but He will eventually judge. - vn *ʔimhaal*; ava *mimhil*.

استمهل *ʔistamhil* 1 /vt/ to give (s.o.) extra time, give respite to (s.o.). *ʔistamhilt-u ktiir* I've given him plenty of time. 2↓ /vi/ to delay, tarry. *mistamhil fi-ʃuɣl-u zyaada ɛan il-luzuum* he takes too much time over his work. ‖*gat-lu muṣiiba ma-stamhil-ʃ* a disaster befell him and (after that) he didn't last for long. - ava *mistamhil*.

م ه ل ل ب see ه ل ب [2]: *mahallabiyya*

م ه م ا
مهما *mahma* /conj/ no matter how much. *ʃii naas bi-tidḫak mahma kaanit in-nukta bayxa* there are people who laugh no matter how stale the joke. *mahma bɛidna da-ḫna wlaad-ik* no matter how far we are from you we are your children.

م ه م ز see also ه م ز
مهمز *mahmiz* /vt/ to urge on, stimulate, encourage. *mahmiz ibn-ak ʃiwayya w-xallii yitʃaṭṭar ɛafaan yingaḥ* push your son a bit and get him to put some effort into his work so that he'll pass (the exam). - vn *mahmaza*; ava/pva *mimahmiz*.
مهماز *miḥmaaz* /n pl *mahamiiz*/ spur.
اتمهمز *ʔitmahmiz* /vi/ 1 to be urged on, be stimulated, be encouraged. 2 to arouse oneself to greater efforts. *ʔil-ḫamdu li-llaah itmahmiz ʃiwayya min yoom ma kallimt-u* since the day I talked to him he's pulled his socks up, thank God. - ava/iva *mitmahmiz*.

م ه م ط
مهمط *mahmaṭ* 1 /vt/ to stretch out of shape. *riglee-k ik-kibiira mahmaṭit.if-faraab* your big feet have pulled the socks out of shape. 2 /vi/ to become stretched out of shape. *ʔil-ḫibaal ik-kittaan bi-tmahmaṭ baɛd[i] ma titball* flax ropes stretch after being wetted. - vn *mahmaṭa*; ava/pva *mimahmaṭ*.
اتمهمط *ʔitmahmaṭ* /vi/ to be or become stretched out of shape. - ava/iva *mitmahmaṭ*.

م ه ن
مهنة *mihna* /n pl *mihan*/ profession. *kull[i] waaḥid wi-lu mihna* (every person has his own trade) ≈ it is natural for a person not to know much about other people's skills.
مهني *mihani* /adj */ professional. *ʔil-mihaniyyiin* professionals. *(ṭaabiɛ) damɣa mihaniyya* a duty stamp used on official documents concerning particular professions (e.g., *mihan taɛlimiyya* for the Ministry of Education, *mihan ṭibbiyya* for the Ministry of Health).

امتهن ʔimtahan /vt/ to run down, belittle. *leeh timtihin karaamit nafs-ak bif-fakl-i-da* why compromise your good name in this manner? - vn *ʔimtihaan*; ava *mimtihin*.

م ه ى

مهية *muhya* /n pl -*aay*/ large two-handled flexible basket woven from palm leaves (fishermen's jargon).

م ه ى ص see also ه ى ص

مهيص *mahyaṣ* /vi/ to have a good time, indulge oneself. - vn *mahyaṣa*; ava *mimahyaṣ*.

مهياص *mihyaaṣ* /adj. pl *mahayiiṣ*/ whimsical, capricious.

اتمهيص *ʔitmahyaṣ* = *mahyaṣ*. - ava *mitmahyaṣ*.

م ه ى ى

ماهيّة *mahiyya* <T *mâhiye*> /n pl -*aat, mahaaya*/ monthly salary.

م و ت

مات *maat (u)* /vi/ **1** to die. *maatit fil-ḥarb* she died in the war. *miin mat-lak* who of your family has died? ‖*da baxiil yimuut ɛala qirf* he's so stingy he'd give his life for a piastre. - *maat fi-gild-u* he was scared to death. - *ʔiid-i maatit ɛal-qalam* my hand was gripping the pen so tightly that now I cannot open it. **2** to be checkmated (of a king in chess). - vn *moot*.

¶ *yimuut fi-* to be crazy about, as in *b-amuut fiiki* I'm crazy about you. *bi-ymuut fil-ɛarabiyyaat* he's wild about cars. - *maat ɛan* (1) to die leaving. *maat ɛan talatiin faddaan* he died leaving thirty feddans, *maat ɛan zooga w-talat ɛiyaal* he died leaving a wife and three kids. (2) to die at the age of. *maat ɛan ɛifriin sana* he died at twenty.

موت *moot* **1** /n/ death. *masʔalit ḥayaah ʔaw moot* a matter of life or death. ‖*moot wi-xaraab diyaar* death and destruction, total ruin. **2** /adv/ extremely, to the utmost. *ʔana taɛbaana moot* I'm tired to death. *b-aḥibb-ak moot* I love you madly.

موتة *moota* /inst n/ a death. *moota mhabbiba* a terrible death. ‖*ḥiyya moota walla tneen* ≈ one can only die once (so there's no reason to be a coward).

ميتة *meeta'* /adj invar/ miserly, stingy.

ميتان *maytaan* /adj */ weak, sickly, looking ready to die.

ميّت *mayyit* /pl -*iin, ʔamwaat*/ **1** /adj/ dead. ‖*ʔana mayyit min il-guuɛ* I'm starving! **2** /n/ deceased person. *ʔil-masiiḥ qaam min been il-ʔamwaat* Christ rose from the dead.

¶ *bil-mayyit* at least. *ʔana mqaddar ʔinni ʔaltiqi fiiha bil-mayyit ɛafara ʔitnaafar gineeh* I reckon I'll find at least ten or twelve pounds in it.

ممات *mamaat'* /n/ death.

ميت *mumiit* **1** /adj/ lethal, deadly. *ʔitɛarraḍt' l-xaṭar mumiit* I faced a terrible danger. **2** /n/ Bringer of death (epithet of God).

موّت *mawwit* /vt/ **1** to kill. *ya tmawwituu-hum ya tiṣṭaduu-hum ɛaʃaan in-naas takul-hum* either kill them (outright), or hunt them so that people may eat them. *bi-ybarram fi-ʃanab-u b-fakl' ymawwit min id-diḥk* the way he twirls his moustache is enough to kill (one) with laughter. **2a** to smooth. **2b** to round off (an edge). **3** to checkmate (a king, in chess). - vn *tamwiit*; ava *mimawwit*.

اتماوت *ʔitmaawit* /vi/ **1** to pretend to be dead. **2** to pretend to be very sick. - ava *mitmaawit*.

استموت *ʔistamwit* /vi/ **1** to pretend to be on one's death-bed. *ruḥna nzuur-u laqenaa mistamwit wi-ɛaamil nafs-u ɛayyaan* we went to visit him and found him pretending he was ill and about to die. **2** to exert oneself to the utmost. *ʔil-laɛɛiiba mistamwitiin ɛaʃaan yiksabu* the players are really fighting to win. - vn *ʔistimwaat*; ava *mistamwit*.

م و ج

موج *moog* /coll n/ wave(s).

موجة *mooga* /unit n, pl -*aat, ʔamwaag*/ a wave.

موجاية *mogaaya* /pl -*aat*/ = *mooga*.

موّج *mawwig* /vt/ **1** to cause (a surface) to become rippled or wavy. **2** to cause to vibrate or oscillate. — /vi/ **3** to ripple. **4** to show variation of tone (of colours). *leeh il-ɛarabiyya lon-ha mmawwig kida* why is the colour of the car not even? - vn *tamwiig*; ava/pva *mimawwig*.

اتموّج *ʔitmawwig* /vi/ **1** to be made or to become rippled, become wavy (of a surface). **2** to vibrate, oscillate. - vn *tamawwug*; ava/iva *mitmawwig*.

تموّج *tamawwug* /n pl -*aat*/ **1** ripple, wave (on a surface). **2** vibration, oscillation.

م و ر

مور *moor* <Fr *mort*> /n/ *[auto]* neutral (gear). *ḥuṭṭ il-ɛarabiyya fil-moor* put the car in neutral.

موّر *mawwar* /vt/ to put (a car etc.) in neutral gear. - vn *tamwiir*; ava/pva *mimawwar*.

اتموّر *ʔitmawwar* /vi/ to be put in neutral gear (of a car etc.) - iva *mitmawwar*.

م و ر د see also م ا ء

مورد، ماورد *maward* /n/ rose water.

م و ز
موز *mooz* /coll n/ banana(s). *ʂubaaɛ mooz* one banana. *mooz bi-laban* banana milk-shake.
موزة *mooza* /unit n, pl *-aat*/ **1** a banana. **2** shin (of meat). *moozit ɖaani* shin of lamb.
موزاية *mozaaya* /n pl *-aat*/ = *mooza*.

م و س
موس *muus* /n pl *ʃamwaas, miwaas*/ razor blade. ‖*(taalib) muus* swot, grind.

م و ض
موضة *mooɖa* <It *moda*> /n pl *-aat*/ fashion, style. *ʈaliɛ mooɖa l-yomeen dool* it's in fashion these days.

م و ع see م ى ع: *mawwaɛ, ʃitmawwaɛ*

م و ف
موف *moov, muuv* <Fr> /adj invar/ mauve.

م و ل [1]
مال *maal*[1] /n pl *ʃamwaal*/ **1** wealth, property. *ʃil-maal il-ɛaamm* public property. *zakki ɛan maal-ak* give alms that your wealth may be blessed. *maal ik-kunazi lin-nuzahi [prov]* ≈ what the miser hoards his heir will squander. *ʃil-maal is-saayib yiɛallim is-sirɣa [prov]* ≈ the hole calls the thief. **2** *[agric]* annual tax on agricultural land.
مالى *maali* /adj/ monetary, financial. *ʃis-sana l-maliyya* the fiscal year. *ɣaraama maliyya* cash fine. ‖*ʃawraaɋ maliyya* (1) banknotes. (2) stocks and shares certificates. *suuɋ il-ʃawraaɋ il-maliyya* the stock exchange.
مالية *maliyya* /n/ finance, monetary affairs. *wizaarit il-maliyya* the Ministry of Finance.
موّل *mawwil*[1] /vt/ to finance. -vn *tamwiil*; ava/pva *mimawwil*.
اتموّل *ʃitmawwil* /vi/ to be financed. -iva *mitmawwil*.

م و ل [2]
موّال *mawwaal* /n pl *mawawiil*/ song in popular tradition characterized by a prelude which is an improvisation on the formula *ya leel ya ɛeen* followed by a section in one of two rhyme-schemes (AAABA or AAABBBA); the singer draws out this section with improvisation and ornamentation. ‖*ʃil-ħuṣaan da lu maɛaaya mawwaal* that horse and I have quite a story to tell (i.e. we've been through a lot together).
موّل *mawwil*[2] /vi/ **1** to compose and/or sing *mawawiil*. **2** *[deris]* to speak incessantly and boringly. - vn *tamwiil*; ava *mimawwil*.

م و ن
مونة *muuna* /n pl *miwan*/ **1** mortar (for bricks). *muuna samra* mortar of mud and straw. **2** solder containing copper (used in brazing). *ʃil-liħaam bil-muuna* brazing. **3** ingredients (of a mixture). **4** parts, materials.
مؤنة *muʃna* /n pl *muʃan*/ provisions, stock, supply.
مؤونة *maʃuuna* = *muʃna*.
موّان *mawwaan* /n * and pl *mawwaana*/ **1** dealer in building supplies. **2** building worker whose job it is to carry mortar.
موّن *mawwin* /vt/ **1** to provision, supply with an allotted share (of goods). **2** to fuel. *ħa-nmawwin il-ɛarabiyya* we'll fuel the car. ‖*mawwin il-huguum [soccer]* to feed the attack (by passing the ball to the forwards). — /vi/ **3** to draw one's allotment of goods, draw one's rations. - vn *tamwiin*; ava/pva *mimawwin*.
تموين *tamwiin* /n pl *-aat*/ allotted share of goods, ration. *biṭaaɋit tamwiin* ration card. *mabaaħis it-tamwiin* government supply control office. *xuṭuṭ il-ʃimdaad wit-tamwiin [mil]* supply lines.
تموينى *tamwiini* /adj/ pertaining to rationing. *ʃil-muqarraraat it-tamwiniyya* ration allocations.
اتموّن *ʃitmawwin* /vi/ passive of *mawwin* 1. -iva *mitmawwin*.

م و ه
موّه *mawwih* **1** /vt/ to camouflage. **2** /vi/ to feint. *bi-yaaxud il-koora w-bi-ymawwih bi-gism-u* he takes the ball and feints with his body. ‖*balaaʃ tamwiih ɛalayya* stop being evasive with me! - vn *tamwiih*; ava *mimawwih*.
اتموّه *ʃitmawwih* /vi/ to be camouflaged. -iva *mitmawwih*.

م ى ا س
مياس *miyaas* /n/ kind of Mediterranean fish.

م ى ت [1]
ميتة *meeta*[2] /conj/ *[non-Cairene]* when.

م ى ت [2] see م و ت: *mayyit, meeta*[1], *maytaan, mumiit*

م ى ت [3] see م ى ى [2]: *miit*

(م ى د)
ميدة *meeda* /n pl *miyad*/ **1** *[constr]* foundation girder. **2** *[naut]* keelson.

ميدان *midaan* /n pl *mayadiin*/ **1** public square. **2** field of battle. **3** sports track. *midaan sabaq* race track.

م ى ر

ميرى *miiri* /adj invar/ **1** pertaining to the government. *ʔarḍ[i] miiri* government-owned land. *ʔin-faat-ak il-miiri ʔitmarraʁ fi-traab-u [prov]* ≈ a government job, however base, is better than any other job. **2a** pertaining to the army. *laabis miiri* in uniform. **2b** militaristic and rigid, inflexible, obdurate. *kalaam miiri* (1) straightforward talk. (2) inflexibility of attitude or behaviour.

م ى ر و ن

ميرون *meeruun* <Gr *muron*> /n/ *[Chr]* chrismal oil.

[1] م ى ز

ميزة *miiza[1]* /n pl *-aat, miyaz/* **1** merit, advantage. **2** characteristic, distinctive feature.

ميّز *mayyiz* /vt/ **1** to distinguish. *ʔit-taks[i] luu loon bi-ymayyiz-u ʕan il-ʕarabiyyaat* the taxi has a colour that distinguishes it from (other) cars. **2** to single out (for preferential treatment). *ma-tmayyiz-uu-ʃ ʕala xwaat-u* don't treat him better than his brothers. — /vi/ **3** to be sensitive. *ʔamma raagil ma-ʕanduu-ʃ tamyiiz bi-ṣaḥiih* what a thick-skinned man! - vn *tamyiiz*; ava/pva *mimayyiz*.

مميّز *mumayyiz*↑ /adj */ distinctive. *laḥn[i] mumayyiz* signature tune.

امتيّز *ʔitmayyiz* /vi/ **1** to be distinguished, be characterized. **2** to be given an advantage. - iva *mitmayyiz*.

امتاز *ʔimtaaz* /vi/ **1** to be excellent. *ʔimtaaz ʕan kull in-naas* he excelled everybody. **2** to be distinguished, be distinctive. - vn *ʔimtiyaaz*; ava *mumtaaz*.

امتياز *ʔimtiyaaz* /n/ **1** /no pl/ **1a** distinction, excellence. *ʔilli bi-ykassib il-ḥarb in-niẓaam wil-imtiyaaz* what wins war is order and high achievement. **1b** *[med]* internship. **2** /pl *-aat*/ privilege. ‖ *ʔil-imtiyaẓaat il-ʔagnabiyya [hist]* the Capitulations granted by the Sublime Porte to foreigners.

ممتاز *mumtaaz* /adj/ excellent. ‖ *rayyis mumtaaz* highest rank of a Nile boat captain. - *ʔid-duyuun il-mumtaaza* (1) low-interest debts. (2) *[hist]* Egypt's foreign debts of three and a half percent (under the Khedive Ismail).

[2] م ى ز

ميزة *miiza[2]* <Fr *mise*> /n/ kitty, pot (in gambling).

[1] م ى س

ميّس *mayyis* /vi/ to bluff one's way around. *ʔinta bi-tmayyis ʕala miin* who are you trying to take in? - vn *tamyiis*; ava *mimayyis*.

ميّاس *mayyaas* · /n * and pl *mayyaasa/* **1** bluffer. **2** braggart.

[2] (م ى س)

ميس *mees* <Engl> /n/ *[mil]* mess.

ميس *miis* /n/ target or goal in several children's ball games. ‖ *ʕamlin-ni miis* they are always hitting at me.

[3] م ى س see م ى ا س : *miyaas*

– م ى س ت

مايسترو *mayistiru* <prob It *maestro*> /n pl *-haat/ [mus]* conductor.

م ى ص

ماص *maaṣ (i)* /vi/ to become pampered or spoilt. - vn *mayaaṣa, mayaṣaan*; ava *maayiṣ*.

ميّص *mayyaṣ* /vt/ to spoil, pamper. *ṣaḥb-ak mayyaṣ banaat-u w-ma-ʕad-ʃ[i] ʠaadir yilimm-u-hum* your friend was too soft with his daughters and now he can't control them. - vn *tamyiiṣ*; ava/pva *mimayyaṣ*.

اتميّص *ʔitmayyaṣ* /vi/ to be spoilt, be pampered. - iva *mitmayyaṣ*.

اتمايص *ʔitmaayiṣ* /vi/ to behave in a spoilt manner. - ava *mitmaayiṣ*.

م ى ض see و ض ى : *meeḍa*

م ى ع

ماع *maaʕ (i, u)* /vi/ **1** to become bland. *ʔif-furba maaʕit min kutr il-mayya* the soup has become tasteless because of being too watery. ‖ *nifs-i maaʕit lamma fribt if-farbaat* drinking the cordial made me feel queasy. **2** to behave in a spoilt manner. *baṭṭali mayaaʕa ya faṭra* stop behaving like a spoilt child, young lady! - vn *mayaaʕa, mawaaʕa, mayaʕaan, mawaʕaan*; ava *maayiʕ*.

ميّع *mayyaʕ* (also *mawwaʕ*) /vt/ **1** to cause to diminish or dwindle. *mayyaʕu l-mawḍuuʕ wi-sabuu l-vaayit ma maat* they played down the subject until (interest in) it died. **2** to cause to become bland. ‖ *ʔil-ʔakl[i] mayyaʕ nifs-i* the food made me feel queasy. - vn *tamyiiʕ, tamwiiʕ*; ava/pva *mimayyaʕ, mimawwaʕ*.

اتميّع *ʔitmayyaʕ* (also *ʔitmawwaʕ*) /vi/ passive of *mayyaʕ*. - iva *mitmayyaʕ, mitmawwaʕ*.

م ى غ

ميعة *meeva* /n/ chaos, utter confusion.

مايع *maayiv* /adj */ mixed-up, chaotic.

– م ى ك ا see م ك ء ى ل : *miikaaʕiil*

م ى ل [1]

مال *maal*[2] *(i)* /vi/ **1** to incline, bend. *ʕil-waḫda tmiil bi-ras-ha wi-tḫaawil tilmis rukab-ha* one bends one's head and tries to touch one's knees. *ʕid-duktuur maal ɛalee* the doctor bent over him. *laqeet-u maayil ɛal-ḥeeṭa* I found him leaning against the wall. **2** to be inclined. *b-amil-lu ʕaktar* I prefer him. *qalb-i bi-ymiil liiha* I'm fond of her. ‖*baxt-u* (or *ḫaal-u) maal* his luck turned bad. - *ʕin maal ɛaleek iz-zaman mayyil ɛala draaɛ-ak [prov]* depend on yourself when times are bad. - vn *meel, mayalaan*; ava *maayil*.

ميل *meel*[1] /n pl *miyuul*/ **1** slant, angle. **2** inclination, liking, longing.

ميلة *meela* /pl *-aat*/ instance noun of *meel*. *ya meelit baxt-i [women]* how unlucky I am!

أميل *ʕamyal* /el/ more/most inclined or sympathetic (towards). *ʕin-naas dool ʕamyal liina min it-tanyiin* these people are more sympathetic towards us than the others.

ميّال *mayyaal* /adj */ inclined. *ʕana mayyaal qawi lis-sitt* I'm very fond of the lady.

ميّل *mayyil* **1** /vt/ to bend. *ʕil-hawa bi-ymayyil in-nabaat* the wind bends the plants. ‖*mayyil baxt(-u)* to cause (s.o.) to have a rotten deal (particularly in marriage). – /vi/ **2** to bend, lean. *ʕil-qiʃra l-xaḍra tmayyil li-taḫt*[i] *w-yiẓhar il-quṭn* the green outer skin curls downwards and the cotton appears. *mayyilt*[i] *w-saḫabt is-sikkiina min taḫt if-faraab* I bent down and pulled the knife out of my sock. *mayyil ɛalayya* lean towards me. **3** to be biased in one's judgement. *ma-tmayyil-ʃ*[i] *fiʃ-ʃihaada* don't deviate from the truth in your testimony. - vn *tamyiil*; ava/pva *mimayyil*.

اتميّل *ʕitmayyil* /vi/ to be caused to lean to one side. - ava/iva *mitmayyil*.

اتمايل *ʕitmaayil* /vi/ to sway. *maaʃi yitmaayil yimiin wi-ʃmaal* going rolling along. - ava *mitmaayil*.

استمال *ʕistamaal* /vt/ to win over, win the favour of. *ʕistamaal il-ɛaskari bis-sagaayir* he won over the policeman with cigarettes. - vn *ʕistimaala*; ava *mistimiil*.

م ى ل [2]

ميل *miil, meel*[2] <Fr *mille*> /n pl *ʕamyaal*/ mile. *miil baḫari* nautical mile.

(م ى ن)

مين *miin*[1] /interrog pron/ who? *ʕinta miin* who are you? *miin il-mudiir* who is the director? *ɛand*[i] *miin* at whose place?

¶ *ya miin* ... oh for someone to .... *ya miin yiṭammin-ni ɛala ṣiḥḥit-ha* I am longing for someone to bring me (good) news of her health.

مين *miin*[2]: *been kull*[a] *ḫiin wi-miin* see *ḫiin*.

ميناء *miina*[1] /n pl *mawaani*/ port.

ميناء، مينا *miina*[2] /n/ **1** glaze, enamel. *maṭli bil-miina* enamel-coated. **2** /pl *-aat*/ watch dial.

م ى و ه

ميوه *mayooh* <Fr *maillot*> /n pl *-aat*/ bathing suit.

م ى ى [1] see also م ا ء [1]

ميّة *mayya* /n/ **1a** water. ‖*raagil mayya min taḫt*[i] *tibn* a cunning sly man. - *rigɛit il-mayya l-magarii-ha* ≈ the quarrel has been patched up. - *mayyit-u garya* he has a lot of money. - *ʕil-mayya tkaddib il-ɣaṭṭaas [prov]* (the water gives the lie to the diver) ≈ the proof of the pudding is in the eating. - *bi-yitkallim ʕingiliizi mayya* he speaks fluent English. - *mayyit naar* any strong acid. - *ɛamal* (or *ʃaxx*[i]) *mayya* to urinate. - *doorit mayya* lavatory. - *ʃuɣl*[i] *ɛala mayya beeḍa* honest work. **1b** (any) liquid. ‖*mizaan mayya* spirit level. - *ʕil-mayya z-zarqa* glaucoma. - *ʕil-mayya l-beeḍa* leucoma. **1c** juice, sap. *ʕil-lamuun malyaan mayya* the lemons are very juicy. **1d** navigable river channel. **1e** *[euphem slang]* wine and spirits. **2** cutting edge. *bi-yaakul fi-mayyit il-muus* it wears down the edge of the razor blade. **3** mood. *ʃuuf mayyit-u ʕeeh* sound him out. *mayyit is-suuq* the state of the market.

م ى ى [1]

ميّة *miyya* **1** /num; constr *miit*, dual *miteen*/ a hundred. *miyya w-ɛiʃriin* one hundred and twenty. *miteen wi-xamsiin* two hundred and fifty. *miit gineeh* a hundred pounds. **2** *ʕil-miyya* /adj invar/ the one-hundredth. **3** /n pl *-aat*/ (unit of a) hundred. *naas bil-miyyaat* people in hundreds. *xamastaaʃar fil-miyya* fifteen percent. ‖*ʃuɣl*[i] *miyya (fil-)miyya* top quality work. - *miyya miyya* or *miyya l-miyya* certainly, definitely.

ن

ن ا ب

ناب *naab*[1] /n pl *niyaab, nuub, ʕanyaab/* canine, tooth, fang. ‖*naab-u ʕazraq* (or *zaariq*) he's wily and cunning. - *qaraḍ ɛala naab-u* he became furious.

ن ا ر see ن و ر[1]: *naar, naari*

ن ا س

ناس *naas* /n, functioning either as fem sing or as pl/ 1 group of people. *naas kitiir gat-lak* (or *guu-lak*) a lot of people came to see you. *ʕiḥtirim in-naas illi bi-tkallim-ak* (or *bi-ykallimuu-k*) show respect to those talking to you. *ʕin-naas illi trabbeet maɛaahum* (or *maɛaaha*) the people with whom I grew up. *fii naas ṣanayɛiyya b-tilbis ɛafriita* there are some craftsmen who wear overalls. ‖*ʕibn*[i] (or *bint*[i]) *naas* a young man (or girl) of good family. - *ɛarabiyya bint*[i] *naas* a good reliable car. - *ḥaaga kwayyisa wi-rxayyiṣa w-bint*[i] *naas* (something good in quality, cheap in price and of good origin) ≈ something good, cheap, and reliable. - *sitt*[i] *min naas zamaan* a lady of the old school. 2 people in general, mankind. *ma tismaɛ kalaam in-naas* why don't you do what people tell you! *rabb-i-na xtaar-u ɛaʕaan yihdi n-naas* Our Lord chose him to guide mankind. *ʕilḥaqu ya naas* help! ‖*ya naas* a rhetorical appeal for help, witness etc., addressed to no one in particular, as in *ḥadd*[i] *qaal kida ya naas* could anyone be so foolish! whoever would say such a thing! - *zayy in-naas* (1) like other people, as in *ʕiḥna miʃ zayy in-naas* we are not like other people. (2) properly, as in *ʕitkallim zayy in-naas* speak properly! - *ʕig-gabalaaya miʃ bayna min hina zayy in-naas* the hillock doesn't show up properly from here. - *ɛamal zayy in-naas [euphem]* to go to the lavatory. see further under ن س و ت

ن ا ف

ناف *naaf* /n pl *nuuf*/ yoke (for a draught animal, e.g., see Pl.D, 11; E, 5).

ن ا ق see ن و ق: *naaqa*

ن ا ی

ناى *naay* /n pl *-aat*/ end-blown reed flute.
نايانى *nayaati* /n pl *-yya*/ player of the *naay*.

ن ب ء

نبأ *nabaʕ* /n pl *ʕanbaaʕ*/ (item of) news. *da nabaʕ zayy iz-zift* that's a lousy piece of news. *nafrit ʕanbaaʕ* news bulletin, newscast. *wikaalit ʕanbaaʕ* news agency.
اتنبّأ *ʕitnabbaʕ* /vi/ to prophesy. *zimil-na tnabbaʕ bil-qanuun qabl*[i] *ma yiṭlaɛ* our colleague predicted the regulation before it came out. -vn *tanabbuʕ*; ava *mitnabbaʕ*. see further under ن ب ی

ن ب ا ل م see ن ب ل م: *nabaalim*

ن ب ب و ت

نبّوت *nabbuut* /n pl *nababiit*/ long heavy stick, quarter-staff. ‖*bin-nabbuut* by force, using the big stick. - *nabbuut il-ɤafiir* /coll n/ halva sticks with sesame seed.

ن ب ت[1]

نبت *nabat (i)* /vi/ to grow up, sprout. *nabatit-lu faɛra f-ɛeen-u* he got an ingrowing eyelash. ‖*fuul naabit* dried broad beans, soaked till they sprout. *furbit naabit* soup made from *fuul naabit* (given especially to the sick). - vn *nabataan, nabaat*; ava *naabit*.
نبات *nabaat* 1 /vn/ ‖*ɛaafu f-tabaat wi-nabaat wi-xallifu ṣubyaan wi-banaat* ≈ they lived happily ever after and bore both boys and girls (the traditional closing formula

of fairy-tales). **2** /coll n/ plant(s). ‖*sukkar in-nabaat* crystallized sugar (sold in lumps to be eaten as sweets).
نباتة *nabaata* /unit n, pl *-aat*/ a small plant. *ʕit-taqaawi di ma-ʈliʒ-ʃ minha wala nabaata* not one little plant came up from these seeds.
نباتى *nabaati* /adj/ **1** vegetable. *niʃa nabaati* vegetable starch. *ʕalyaaf nabatiyya* vegetable fibres. **2** vegetarian.
نباتين *nabatiin* /n/ vegetable fat.
منبت *manbat* /n pl *manaabit*/ place of growth, source. *ʕil-faṣl da manbat il-fasaad fil-madrasa* this class is the source of all the corruption in the school. ‖*manbat iʃ-faʒr* coronary band (of a horse).
نبّت *nabbit*[1] **1** /vt/ to cause to sprout. *bi-tnabbit il-fuul* she leaves the beans (in water) to sprout. **2** /vi/ to sprout. *bi-nsiib il-ʕarḍ lamma l-fuul yinabbit* we leave the ground until the beans sprout. - vn *tanbiit*; ava *minabbit*.
اتنبّت *ʕitnabbit*[1] /vi/ passive of *nabbit*[1] **1**. - iva *mitnabbit*.
استنبت *ʕistanbit* /vt/ to breed (plants). *wizaarit iz-ziraaʒa b-tistanbit kull sana ʕaṣnaaf gidiida min il-quṭn wil-ḥubuub* every year the Ministry of Agriculture develops new kinds of cotton and other seeds. - vn *ʕistinbaat*; ava/pva *mistanbit*.

[2] ن ب ت
نباتة *nibaata* /n/ sewing over a seam a second time for strengthening and neatening.
نبّت *nabbit*[2] /vt/ *[needlew]* to sew the seam of (a garment) a second time with fine stitches (by hand or on a machine). - vn *tanbiit*; ava/iva *minabbit*.
اتنبّت *ʕitnabbit*[2] /vi/ passive of *nabbit*[2]. - iva *mitnabbit*.

[3] ن ب ت
نبيذ *nibiit* /n/ wine.
نبيتى *nibiiti* /adj invar/ wine-red, maroon.

[4] ن ب ت see ن ب ب و ت: *nabbuut*

ن ب ت ش ى see [1] ن و ب: *nabatʃi, nobatʃi*

ن ب ح
نبح *nabaḥ (a)* /vi/ **1** to bark. *ʕik-kalb dayman bi-yinbaḥ gamb bet-na w-m-aʒraf-ʃ anaam* the dog is always barking next to our house and I can't get any sleep. **2** /vt/ to make hoarse, strain (the voice). *ʕil-waaḥid bi-yinbaḥ ṣoot-u ʈuul in-nahaar wil-ʕawlaad ya-ʕimma xumm noom ʕaw ʃayaʈiin* one shouts oneself hoarse all day long but the kids stay fast asleep or behave like little devils. - vn *nabḥ, nibiiḥ, nabaḥaan*; ava *naabiḥ*; pva *manbuuḥ*.
نبحة *nabḥa* /pl *-aat*/ instance noun of *nabḥ*.
اتنبح *ʕitnabaḥ* /vi/ **1** to become hoarse. *bi-tsiib-u l-ɤaayit ma yitnibiḥ min il-ʒiyaaʒ* she leaves him till he is hoarse with crying. **2** (impersonal) passive of *nabaḥ* 1. *kull ma yitnibiḥ ʒalee yiʈlaʒ gary* each time he is barked at he runs away. - iva *mitnibiḥ*.

ن ب ذ see [3] ن ب ت and [1] ن ب ز

[1] ن ب ر
نبرة *nabraʔ* /n pl *-aat*/ timbre. *nabrit* (or *nabaraat*) *iṣ-ṣoot* the timbre of the voice. *ʕil-mafruuḍ il-mulaʒʒin tikuun nabaraat-u waḍḥa* the prompter should have a clearly modulated voice. *kaan bi-ykallim-ha b-nabra ḥaadda ḥabbiteen* he was talking to her in a rather sharp tone of voice.
منبر *mambar, mimbar* /n pl *manaabir*/ **1** *[Isl]* minbar, pulpit (in a mosque). **2** *ʕil-manaabir* /pl n/ *[obsol]* Egyptian political groupings formed in the Sadat era which facilitated the transition from a one-party to a multi-party system.

[2] ن ب ر see م ن ب ا ر: *mimbaar*

[3] ن ب ر see ن ب ر و ه: *nabaraawi*

ن ب ر و ه
نبروه *nabarooh* /prop n/ Nabarow, a small town in Daqahliya province, famous for its salted fish.
نبراوى *nabaraawi* **1** /n pl *-yya*/ native of Nabarow. **2** /adj/ of or pertaining to Nabarow. *fisiix nabaraawi* (fine quality) *fisiix* from Nabarow.

[1] ن ب ز
نبذ *nabaz*[1] *(i)* /vt/ to spurn, ostracize, forsake. *kull in-naas nabazit-u ʒafaan lisaan-u ʈ-ʈawiil* everybody ostracized him because of his insolence. - vn *nabz, nabazaan*; ava *naabiz*; pva *manbuuz*.
نبذة *nabza* /pl *-aat*/ instance noun of *nabz*.
منبوذ *manbuuz* /adj */ rejected, outcast. ‖ *ʕil-manbuziin* the untouchables (of India).
نبذة *nubza* /n pl *-aat, nubaz*/ **1** introductory résumé. **2** tract, pamphlet.
اتنبذ *ʕitnabaz*[1] /vi/ to be spurned, be ostracized, be forsaken. - iva *mitnibiz*.

ن ب ز [2]
نبّز *nabbiz* /vi/ to make insinuations, speak slightingly. *kull[i] ma ʃaqʕud maʕaahum yinabbizu ʕaleeha b-kalaam* every time I sit with them they make snide remarks about her. - vn *tanbiiz*; ava *minabbiz*.
اتنبّز *ʃitnabbiz* /vi/ (impersonal) passive of *nabbiz*. *miʃ ʃana lli yitnabbiz ʕalee* I am not one to be spoken about slightingly. - iva *mitnabbiz*.

ن ب ز [3] see ن ب س : *nabaz[2]*

ن ب س
نبس *nabas* (also *nabaz[2]*) *(i)* /vi/ to utter, speak. *ʕaʕad fil-galsa ma-nabas-ʃ[i] b-kilma* he did not utter a word during the hearing. - vn *nabs, nabasaan*; ava *naabis*.
اتنبس *ʃitnabas* (also *ʃitnabaz[2]*) /vi/ (impersonal) passive of *nabas*. *ma-tnabas-ʃ[i] b-kilma fil-mawḍuuʕ* not a word was said on the subject. - iva *mitnibis*.

ن ب ش
نبش *nabaʃ (i)* /vt/ to dig up, rummage in, scrabble in. *ʕaʕad yinbiʃ (f)ik-karakiib li-ɣaayit ma laʕa l-muftaaḥ* he rummaged around in the odds and ends until he found the key. - vn *nabaʃaan, nabṭ*; ava *naabiʃ*; pva *manbuuʃ*.
نبشة *nabʃa* /pl *-aat*/ instance noun of *nabʃ*.
اتنبش *ʃitnabaʃ* /vi/ passive of *nabaʃ*. *ʃil-ʕabr itnabaʃ* the grave was desecrated. - iva *mitnibiʃ*.
نبّش *nabbiʃ* /vi/ **1** to scratch (at s.th.). *ʕaʕad yinabbiʃ fiṭ-ṭarabeeza l-ɣaayit ma bawwaz il-ʕiʃra* he kept scratching away at the table till he ruined the veneer. **2** to make enquiries, try to find out. *lissa bi-ynabbiʃu wara* (or *ʕala) l-ḥagaat illi tsaraʕit min ʃaʕʕit-hum* they're still trying to track down the things that were stolen from their flat. - vn *tanbiiʃ*; ava *minabbiʃ*.

ن ب ض
نبض *nabaḍ (u)* /vi/ to palpitate, beat, pulse. *ʕalb-u lissa b-yunbuḍ* his heart is still beating. - vn *nabḍ, nabaḍaan*; ava *naabiḍ*.
نبض *nabḍ* /n/ pulse. ‖*gass[i] nabḍ-u* (1) he took his pulse. (2) he felt him out, he explored his attitude.
نبضة *nabḍa* /inst n, pl *-aat*/ a pulse, a beat. *ʃin-nabḍ iṭ-ṭabiiʕi lil-ʕalb itneen wi-sabʕiin nabḍa* the heart normally beats seventy-two times (per minute).

ن ب ط
نبّط *nabbaṭ* /vi/ to make insinuations, drop hints. *ʕaaʕid yinabbaṭ miʃ-ʃubḥ[i] wi-yrammi kalaam min ɣeer ma yʕuul ʕa-lli huwwa ʕayz-u biz-ʒabṭ* he's been beating about the bush hinting and insinuating things for ages without spelling out what he really wants. - vn *tanbiiṭ*; ava/pva *minabbaṭ*.
اتنبّط *ʃitnabbaṭ* /vi/ (impersonal) passive of *nabbaṭ*. *miʃ dool illi yitnabbaṭ ʕaleehum* these (people) are not the type to have insinuations made about them. - iva *mitnabbaṭ*.
استنبط *ʃistanbaṭ* /vt/ to infer, deduce. *ʃistanbaṭt[i] min kalam-hum ʃinnuhum ʒalʕiin riḥla* I gathered from what they said that they were going to go on a trip. - vn *ʃistinbaaṭ*; ava *mistanbaṭ*.

ن ب ع
نبع *nabaʕ↑ (u)* /vi/ to spring (from a source). *ʃir-raqṣ iʃ-ʃarqi naabiʕ min il-bii*ʃa oriental dancing is a product of its environment. - vn *nabʕ, nabaʕaan*; ava *naabiʕ*.
منبع *manbaʕ* /n pl *manaabiʕ*/ source, origin. *manaabiʕ in-niil* the sources of the Nile. *ʃibʕid ʕannu da manbaʕ fasaad* stay away from him, he's a source of evil! *ʃiḍ-ḍariiba titxiṣim min il-manbaʕ* the tax is deducted at source.
ينبوع *yanbuuʕ* /n pl *yanabiiʕ*/ spring, well.

ن ب غ
نبغ *nabaɣ↑ (u)* /vi/ to excel, distinguish oneself. *da naabiɣ fil-mazziika* he excels at music. - vn *nubuuɣ*; ava *naabiɣ*.
نابغ *naabiɣ↑* /adj * and pl *nawaabiɣ*/ outstanding, brilliant.
نابغة *nabɣa* /adj pl *nawaabiɣ*/ of genius. *ʕaalim nabɣa xtaraʕ ir-radyu* an outstanding scientist invented the radio.
أنبغ *ʃanbaɣ* /el/ more/most outstanding or brilliant.

ن ب ق
نبق *nabq, nabaq* /coll n/ jujube(s), jujube fruit. ‖ *ʃilli sabaq kal in-nabaq* (he who comes first eats the jujube) ≈ first come, first served.
نبقة *nabqa, nabaqa* /unit n, pl *-aat*/ a jujube.
نبقاية *nabqaaya, nabaqaaya* = *nabqa*.

ن ب ل [1]
نبل *nibl* /coll n/ catapult(s), sling-shot(s).
نبلة *nibla* /unit n, pl *nibal, niblaat*/ a catapult, a sling shot.
نابل *naabil: ʃil-ḥaabil ʕala n-naabil* see *ḥaabil*.

ن ب ل [2]
نبل *nubl* /n/ magnanimity, nobility.
نبيل *nabiil* /adj pl *nubala*/ magnanimous, noble.

أنبل ʕanbal /el/ more/most magnanimous or noble.

ن ب ل س

نابلس *nablus* /prop n/ Nabulus, a town west of the river Jordan and north of Jerusalem.

نابلسى *nabulsi* /adj */ from or pertaining to Nabulus. ‖*ṣabuun nabulsi* a fine toilet soap made with olive oil.

ن ب ل م

نابالم *nabalm* (also *nabaalim*) <Engl> /n/ napalm.

ن ب ل ى ا see م ب ل ى ا : *nabulya*

ن ب ه

نباهة *ñabaaha* /n/ cleverness, intelligence.

نبيه *nabiih* /adj pl *nubaha*/ clever, intelligent.

أنبه ʕanbah /el/ more/most clever or intelligent.

نبّه *nabbih* /vt/ to alert. *fii xaṭar kibiir ʕana ɛaawiz ʕanabbih-ak lii* there is a grave danger to which I want to draw your attention. - vn *tanbiih*; ava *minabbih*.

¶ *nabbih ɛala* to serve notice on. *nabbihu ɛalayya ʕaḥḍar ig-galsa bukra* they served notice on me to attend the session tomorrow.

تنبيه *tanbiih* /n pl *-aat*/ **1** announcement. **2** warning.

منبّه *minabbih* /n pl *-aat*/ alarm clock.

انتبّه ʕitnabbih /vi/ **1** to become aware or alert. *ʕitnabbiht*^{i} *min noom-i ɛala ʃwayyit ɛiyaal ɛammaliin yiɛaksuu-ni* I woke up to find some kids trying to annoy me. *ʕil-ḥukuuma tnabbihit li-ɋillit il-maḥṣuul* the government woke up to the crop shortage. **2** to be alerted. - vn *tanabbuh*; ava/iva *mitnabbih*.

¶ *ʕitnabbih ɛala* passive of *nabbiḥ ɛala*. *ʕitnabbih ɛalee yiḥḍar il-maḥkama* notice was served on him to attend the court.

انتبه ʕintabah /vi/ to take notice, pay attention. *laazim yizaakir wi-yintibih li-mustaqbal-u* he must study and pay attention to his future. *bi-yfidd intibaah in-naas lii* he draws people's attention to himself. - vn *ʕintibaah*; ava *mintibih*. see further under ت ب ه

انتباه *ʕintibaah* /interj/ *[mil]* attention!

استنبه *ʕistanbih* **1** /vt/ to select for intelligence and skill. *ʕistanbih tilmiiz wi-bɛat-u yigmaɛ maɛlumaat lil-magalla* find a bright pupil and send him to collect information for the magazine. **2** /vi/ to act the wise guy. - ava *mistanbih*.

ن ب و see ن ب ى : *nabawi, nibuwwa, nubuwwa*

ن ب ى see also ن ب ء

نبى *nabi* /n/ **1** /pl *ʕanbiyya, ʕanbiya, ʕanbiyaaʕ*↑/ prophet. **2** *ʕin-nabi* the Prophet Muhammad. ‖*win-nabi* used as *w-allaahi* (q.v.). - (*ʕism*) *in-nabi ḥars-u [women in trad soc]* may the Prophet's name protect him! (used with, or instead of, a child's name to ward off the evil eye). - *da-ḥna zar-na n-nabi* (it is as though the Prophet had visited us!) we are greatly honoured by your visit! - *ʕin-nabi tabassam* (even) the Prophet smiled! (to get a smile from a girl in the street).

نبوى *nabawi* /adj/ pertaining to the Prophet Muhammad. *ʕis-siira n-nabawiyya* the biography of the Prophet.

نبوّة *nibuwwa, nubuwwa* /n/ **1** prophethood. *bi-yiddiɛi n-nubuwwa* he claims to be a prophet. **2** /pl *-aat*/ prophecy.

نبّى *nabba*: *win-nabi wi-lli nabba n-nabi nabi [women in trad soc]* by the Prophet and Him Who made the Prophet a prophet! (a strong oath).

ن ت ت^{1}

نتّ *natt (i)* /vi/ to grunt. *baɋa maaʃi ynitt*^{i} *biʃ-ʃeela* he was going along grunting because of the load (he was carrying). - vn *natt, natataan*; ava *naatit*.

نتّة *natta* /inst n, pl *-aat*/ a grunt.

ن ت ت^{2}

نتّ *nitt* <Fr *net*> **1** /adj invar/ spot-on, on-target. *ḥall*^{i} *nitt* exactly the right solution. - /adverbially/ *ʃiliɛ nitt* it turned out just right. ‖*nitt in-nitt* sparkling clean, as in *ḥ-axalli ɛarabiyyit-ak nitt in-nitt* I'll fix your car so that it shines. **2** /n/ *[phot]* focus. - /adjectivally/ *ʕiṣ-ṣuura ma-hiyyaa-ʃ nitt* the picture is not focussed.

ن ت ج

نتج *natag (i, u)* /vi/ to result. *bi-yuntug ɛan il-ʕazma ɣala ʕasɛaar* the result of the shortage is a rise in prices. *ṣada naatig ɛan ir-ruṭuuba* rust resulting from the damp. - vn *natg, natagaan*; ava *naatig*.

ناتج *naatig* /n pl *nawaatig*/ resultant, product. *naatig il-ɋisma [math]* quotient.

منتوج *mantuug* /n pl *-aat*/ product.

نتاج *nitaag, nataag* /n/ *[agric]* produce, yield (in crops or livestock).

نتيجة *natiiga* /n pl *nataayig*/ **1** result, outcome. *natiigit imtiḥaan* examination result. **2** calendar. *natiigit ḥeeṭ* a wall calendar.

¶ *natiigit ʕinn* /conj/ as a result of the fact that.

نتّاج *nattaag* /adj pl *nattaaga*/ productive.

اتنتج *ʕitnatag*↓ /vi/ to result, be caused. *ʕitnatag ɛannu kalaam faariɣ kitiir* a lot of nonsense resulted from it. - ava/iva *mitnitig*.

أنتج ʕantag /vt/ to produce. *ʕiḥna b-nintig il-ʕisṭuwanaat wi-baɛdeen bi-nwazzaɛ-ha big-gumla* we produce the records and then distribute them wholesale. -/the literary passive form occurs/ *baɛdii bi-tuntag it-tamasiil* after this the casts are turned off. -vn *ʕintaag*; ava *muntig*; pva *muntagˀ*.

إنتاج ʕintaag /n/ production, output. *ʕil-ʕintaag il-kulli lil-muʕassasa* the over-all output of the organization.

إنتاجى ʕintaagiˀ /adj/ pertaining to production, productive. *ṭaaqa ʕintagiyya* productive capacity.

منتج *muntig* **1** /n */ producer. **2** /adj */ industrious.

منتجات *muntagaat* /pl n/ products. *muntagaat ziraɛiyya* agricultural products. *muntagaat ṣinaɛiyya* industrial products.

استنتج ʕistantig /vt/ to deduce. *huwwa lli stantig il-ḥall[i] l-waḥd-u min ɣeer musaɛda* he deduced the solution alone without any assistance. -vn *ʕistintaag*; ava *mistantig*.

استنتاج ʕistintaag /n pl *-aat*/ inference. *da stintaag walla-nta fiɛlan fuft-u* is this a deduction you have made or have you actually seen him?

ن ت ر

نتر، نثر *natar (u)* /vt/ **1** to scatter, strew, broadcast. *bi-nuntur is-sibaax bil-fuus* we scatter the fertilizer with hoes. **2a** to jerk. *ʕil-ɛagala nizlit fi-maṭabb[i] w-raaḥit mantuura* the wheel went into a pothole with a bump. *ʕil-ɢaṭr[i] wiqif marra waḥda fa-naṭar kull in-naas li-ɢuddaam* the train came to a sudden stop and jerked all the people forwards. **2b** to toss. *bi-yunṭur il-muftaaḥ fi-ʕiid-u* he's tossing the key in his hand. *natart-u bɛiid* I tossed it far away. — /vi/ **3** to jerk out, spring out, eject. *fii susta taḥt il-musmaar fa-ʕawwil ma tliff-u yuntur* there is a spring beneath the screw and, as soon as you turn it, it jumps out. *susat natr* ejector springs. ‖*faxaṭ wi-natar* to shout and gesticulate. -vn *natr*; ava *naatir*; pva *mantuur*.

نترة، نثرة *natra* /inst n, pl *-aat*/ a jerk, a toss, a scattering.

منتور، منثور *mantuur* /coll n/ stock(s), gillyflower(s).

اتنتر، اتنثر ʕitnatar /vi/ **1** passive of *natar* 1 and 2. **2** = *natar* 3. - ava/iva *mitnitir*.

نتّر، نثّر *nattar* /vt/ **1** to scatter widely, scatter successively. *nattar iz-zabaayin fiṣ-ṣaala* he seated the customers about the room. *nattar is-sibaax fil-ɣeeṭ* he scattered the fertilizer over the field. **2** to toss up and down, toss repeatedly. -vn *tantiir*; ava/pva *minattar*.

اتنتّر، اتنثّر ʕitnattar /vi/ **1** to be scattered widely, be scattered successively. **2** to be tossed up and down, be tossed repeatedly. -iva *mitnattar*.

ن ت ر ا ت

نترات *nataraat, nitraat* <Fr *nitrate*> /n/ nitrate. *nataraat faḍḍa* silver nitrate.

ن ت ر ى ك

نتريك *nitriik* <Fr *nitrique*>: *ḥaamiḍ in-nitriik* /n/ nitric acid.

ن ت ر ى ل

ناتوريل *natureel* <Fr *naturel*> /adj invar/ natural.

ن ت ش

نتش *nataʃ (i)* /vt/ **1a** to snatch, grab. *nataʃt il-ɢalam min ʕiid-u* I snatched the pencil from his hand. *nataʃ il-ɣadwa w-ɢaam* he gulped down the lunch and left. **1b** to purloin, swipe. *ɢallibt-u w-nataʃt[i] minnu l-maḥfaẓa* I ran through his pockets and swiped his wallet. **2** to snatch at, catch at. *ʕik-kursi fii musmaar nataʃ banṭaloon-i* there is a nail in the chair that snagged my trousers. *ʕil-maṭabb[i] yintiʃ il-ɢagala truuḥ manṭuura* the pothole catches the wheel and it gives a jerk. *ʕil-maɢaṣṣ it-tilim bi-yintiʃ if-faɛr* blunt scissors catch in the hair. **3** to deal (e.g., a blow) to. *nataʃt-u ɢalam xalla wdaan-u tṣaffar* I dealt him a slap on the face that made his ears ring. — /vi/ **4** to speak in a curt or abrupt manner, snap. *ma-tintiʃ-fʲ ya beeh* don't snap (at me), sir! **5** to fabricate tales that reflect well on oneself, tell cock-and-bull stories of one's exploits. -vn *nataʃaan, natʃ*; ava *naatiʃ*; pva *mantuuʃ*.

نتشة *natʃa* /pl *-aat*/ instance noun of *natʃ*.

أنتش ʕantaʃ /el/ **1** more/most boastful. **2** more/most magnificent. *di ʕantaʃ ɛarabiyya fif-ʃirka* this is the most luxurious car in the company.

نتّاش *nattaaʃ* /n */ **1** thief. *beet in-nattaaʃ ma-yiɛlaa-ʃ [prov]* a thief never prospers. **2** braggart.

اتنتش ʕitnataʃ /vi/ passive of *nataʃ*. -iva *mitnitiʃ*.

نتّش *nattiʃ* /vt/ **1** to snatch or grab repeatedly. ‖ *ʕin-naas ɛammaliin yinattiʃu laḥm-i b-sabab-ak* people are gossiping about me because of you. **2** to snatch at or catch at repeatedly. -vn *tantiiʃ*; ava/pva *minattiʃ*.

تناتيش *tanatiiʃ* /pl n/ odds and ends, bits and pieces. *lissa ɛalayya tanatiiʃ filuus* I still have a few small debts to settle. *simiɛt[i] tanatiiʃ kalaam* I heard some bits of gossip.

اتنتّش ʕitnattiʃ /vi/ passive of *nattiʃ*. -iva *mitnattiʃ*.

ن ت ع

نتع *nataɛ (a)* /vt/ **1** to heave (a heavy weight) with a jerk. *miʃ ɢaadir yintaɛ ik-kursi mil-ʕarḍ* he is unable to lift the chair an inch off the floor. **2** to deal a heavy blow

to. *raaḥ nataɛ-u ʃalluut ʃaal-u min ɛal-ʃarḍ* he upped and gave him a kick in the pants that sent him flying. **3** to relieve (s.o.) of a heavy weight. ‖*rabb-i-na yintaɛ-ik bis-salaama [women]* may Our Lord deliver you safely (to a pregnant woman). - vn *nataɛ, nataɛaan*; ava *naatiɛ*; pva *mantuuɛ*.

نتعة *nataɛa* /pl *-aat*/ instance noun of *nataɛ*. *nataɛ il-baab nataɛa xalaɛit-u* he gave the door a wrench that tore it off its hinges.

انتتع *ʃitnataɛ* /vi/ passive of *nataɛ*. - iva *mitnitiɛ*.

نتع *nattaɛ* **1** /vt/ to wrench or jolt repeatedly. *wi-huwwa bi-yḥaawil yifiil if-fiwaal ɋaɛad yinattaɛ fii li-xaayit ma lawaḥ ḍahr-u* trying to lift up the sack he kept on heaving at it until he strained his back. **2** /vi/ to struggle to do something. *baɋa maaʃi ynattaɛ bif-ʃeela* he was going along practically collapsing under the load. *bi-ynattaɛ fik-kitaaba* he can write only with difficulty. - vn *tantiiɛ*; ava/pva *minattaɛ*.

انتتع *ʃitnattaɛ* /vi/ passive of *nattaɛ* 1. - iva *mitnattaɛ*.

ن ت ف

نتف *nataf (i)* /vt/ **1** to pluck (hair, feathers etc.). *natafit il-farxa* she plucked the chicken. *natafit wiʃʃ-a-ha bil-ḥalaawa* she removed the hair from her face with depilatory paste. **2** to strike. *nataft-u ɛalɋa kwayyisa* I gave him a good beating. - vn *natf, natafaan*; ava *naatif*; pva *mantuuf*.

نتفة *natfa* /pl *-aat*/ instance noun of *natf*.

نتّفة *nitfa* /n pl *-aat, nitaf*/ **1** small piece, fraction. *ʃeeh in-nitfa lli-nta b-tiddi-haa-li di* what is this tiny piece you are giving me! **2** *nitfit ... [slang]* a fine specimen of .... *(ḥittit (diin)) nitfit farxa* a very delicious chicken. *ḥittit (diin) nitfit bint* a gorgeous girl, a very sexy girl.

انتتف *ʃitnataf* /vi/ **1** to be plucked (of hair, feathers etc.). *ʃil-faras il-hadya yitnitif ḍel-ha [prov]* (the quiet mare gets its tail plucked) a timorous person will be taken advantage of. **2** to be struck. - iva *mitnitif*.

نتّف *nattif* /vt/ **1** to pluck with repeated movements. **2** to separate into small fragments. - vn *tantiif*; ava/pva *minattif*.

انتتّف *ʃitnattif* /vi/ passive of *nattif*. - iva *mitnattif*.

ن ت ن

نتن *nitin* /adj * and pl *nutana*/ **1** stinking, putrid. ‖ *ʃik-kibiir in-nitin* the (unlucky) dice combination of a one and two (in backgammon). **2** stingy, mean. *fuuf in-nitin mistaxṣar fiyya kubbaayit ʃaay* the rotten miser won't even buy me a glass of tea!

نتنة *nitna* /n/ name given to various plants of the goosefoot family.

أنتن *ʃantan* /el/ **1** more/most putrid or rotten. **2** more/most stingy or mean.

نتانة *nataana* /n/ **1** putridness, rottenness. **2** stinginess, meanness. *baṭṭal nataana* don't be such a mean so-and-so!

منتنة *mintina* = *nitna*.

نتّن *nattin* **1** /vt/ to cause to turn putrid. *ʃil-ḥarr[i] nattin-u* the heat turned it putrid. **2** /vi/ to turn putrid. *ʃil-laḥma nattinit* the meat turned putrid. *buqq-u nattin min ig-guuɛ* his breath turned foul from lack of food. - vn *tantiin*; ava *minattin*.

ن ت و ر

نتور *natwar* /vt/ to scatter, strew. *laaqit il-hiduum minatwara f-kull[i] makaan* she found the clothes strewn all over the place. - vn *natwara*; ava/pva *minatwar*.

انتتور *ʃitnatwar* /vi/ to be scattered, be strewn. - vn *tinatwiir*; iva *mitnatwar*.

ن ت ى see [1] ن ت ء : *nitaaya*

ن ث ر see ن ت ر and [3] ن س ر

[1] ن ج ب

نجب *nagab (i)* /vt/ *[rur]* to summon, invite. ‖*ḥadd[i] nagab-ak* has anyone asked your opinion? - vn *nagabaan*; ava *naagib*.

نجّاب *naggaab* /n pl *nagagiib, naggaaba, naggabiin*/ *[rur]* messenger sent from family to family to announce the death of a relative.

[2] ن ج ب

نجب *nigib* /adj */ smart-alecky.

أنجب *ʃangab[1]* /el/ more/most excellent or distinguished.

نجابة *nagaaba* /n/ **1** outstanding ability. **2** smartness, slickness. *baṭṭal nagaaba wi-kkallim kuwayyis* stop trying to be smart and talk properly!

نجيب *nagiib* /adj pl *nugaba*/ excellent, distinguished. *tilmiiz nagiib* a bright and industrious student.

ناجب *naagib* /adj * and pl *nugaba*/ **1** outstandingly able. **2** smart-alecky.

اتناجب *ʃitnaagib* /vi/ to act the smart-aleck. - ava *mitnaagib*.

أنجب *ʃangab[2]* /vt/ to give birth to. *ʃangabit-lu talat wilaad* she bore him three boys. - vn *ʃingaab*; ava *mungib*.

استنجب *ʃistangib* **1** /vt/ to select for outstanding ability. **2** /vi/ to act the smart aleck. - vn *ʃistingaab*; ava *mistangib*.

ن ج ح

نجح *nagaḥ* or *nigiḥ (a)* /vi/ **1** to succeed, be successful. *mafhumiyyit-i lil-mafruuᶜ ʕinnu miʃ ḥa-yingaḥ* as I understand the project, it will not come off. **2** to pass (in an examination). *ʕinta ḥa-tingaḥ wi-ḥa-tgiib magmuuᶜ bi-ʕizn illaah* you'll pass and get a (good) grade, God willing. *nigiḥt[i] fik-kaff iṭ-ṭibbi* I passed the medical. - vn *nagaaḥ*; ava ***naagiḥ***.

نجاح *nagaaḥ* /n/ success. ‖ *ʕistimaarit nagaaḥ [acad]* form stating that a student has passed a certificate exam (e.g., the secondary general (*sanawiyya ᶜaamma*) examination) and showing details of his marks.

ناجح *naagiḥ* **1** /n */ successful candidate. **2** /adj */ successful.

أنجح *ʔangaḥ* /el/ more/most successful.

نجّح *naggaḥ* /vt/ to cause to succeed. *rabb-i-na ynaggaḥ maqaṣd-ak* may God grant you success in your aims! - vn *tangiiḥ*; ava *minaggaḥ*.

اتنجّح *ʕitnaggaḥ* /vi/ **1** to be made to succeed. **2** to be made to pass (an examination). *ʕitnaggaḥit bil-ᶜafya* it was with great difficulty that she was got through the exam. - iva *mitnaggaḥ*.

[1] ن ج د

نجّد *naggid* /vt/ **1** to upholster. *ʕik-kanaba twassaxit xaaliṣ wi-laazim ʔanaggid-ha* the sofa has become very dirty and I must have it re-upholstered. **2** to tease out (compacted cotton) with a wire bow. - vn *tangiid*; ava/pva *minaggid*.

منجّد *minaggid* /n */ **1** upholsterer. **2** one who teases out compacted cotton with a wire bow.

منجّداتي *minaggidaati* /n pl *-yya*/ = *minaggid*.

اتنجّد *ʕitnaggid* /vi/ passive of *naggid*. - iva *mitnaggid*.

[2] ن ج د

نجد *nagad (i)* /vt/ to help (s.o.) in an emergency, rescue, save. - vn *nagda*; ava *naagid*.

نجدة *nagda* **1** /vn/ ‖ *ʕiʃaarit nagda* a distress signal. *buliiṣ in-nagda* an arm of the police force that is available to help the public in any emergency. **2** /n pl *-aat*/ rescue, rescue team.

اتنجد *ʕitnagad* /vi/ to be rescued, be saved. - iva *mitnigid*.

استنجد *ʕistangid* /vi/ to appeal for help. *ʕiḥna ruḥnaa-lu lamma stangid biina* we went to him when he asked for our help. - vn *ʕistingaad*; ava *mistangid*.

[1] ن ج ر

نجارة *nigaara* **1** /n/ carpentry, carpenter's trade. **2** carpentry-work.

نجّار *naggaar* /n */ carpenter. ‖ *naggaar xarasaana [constr]* carpenter who erects reinforced concrete shuttering. - *baab in-naggaar mixallaᶜ [prov]* (the carpenter's door hangs awry) ≈ the cobbler's children are ill-shod.

نجّر *naggar* /vt/ **1a** to trim (a branch, a rough piece of wood). **1b** to knock the rough edges off (s.o.), give (s.o.) polish. **2** to work (wood), carpenter (wood). - vn *tangiir*; ava/pva *minaggar*.

اتنجّر *ʕitnaggar* /vi/ **1a** to be trimmed (of wood). **1b** to be given or acquire polish. **2** to be worked (of wood). - ava/iva *mitnaggar*.

[2] ن ج ر se ء ن ج ر : *ʔangar*

ن ج ز

نجّز *naggiz* /vt/ to execute, complete, carry out. *ᶜawziin ᶜummaal mumtaziin ᶜafaan ninaggiz il-ᶜamal* we want some excellent workers so as to be able to complete the job. - vn *tangiiz*; ava *minaggiz*.

اتنجّز *ʕitnaggiz* /vi/ to be executed, be completed, be carried out. - iva *mitnaggiz*.

أنجز *ʔangaz* = *naggiz*. - vn *ʔingaaz*; ava *mingiẓ, mungiẓ[†]*.

استنجز *ʕistangiz* /vt/ to hurry up, speed up, hasten. - vn *ʕistingaaz*; ava *mistangiz*.

ن ج س

نجاسة *nagaasa* /n/ **1** *[usu Isl]* ritual impurity resulting from certain acts (e.g., sexual intercourse) or contact with certain impure things (e.g., faeces, urine). **2** uncleanness, defilement.

نجس *nigis* /adj */ **1** *[usu Isl]* **1a** in a state of *nagaasa*. **1b** capable of causing *nagaasa* (of certain acts and impure things). ‖ *ʕil-ᶜaya ṭ-ṭifis lii ʕid-dawa n-nigis [prov]* a nasty disease requires a foul medicine. **2a** unclean, defiled. **2b** low, mean, base.

أنجس *ʔangas* /el/ more/most *nigis*.

منجوس *manguus* /adj * and pl *managiis*/ vile, ruthless.

نجّس *naggis* **1** /vt/ *[usu Isl]* to make ritually unclean, defile. *ʕik-kalb[i] naggis il-mayya lamma ḥaṭṭ[i] buuz-u fiiha* the dog made the water unclean by putting its snout in it. **2** /vi/ *[slang]* to become low, mean or base. *min yoom ma rgiᶜt[i] w-huwwa bi-ynaggis maᶜaaya* ever since I've returned he's been playing dirty with me. - vn *tangiis*; ava/pva *minaggis*.

اتنجّس *ʕitnaggis* /vi/ to be made ritually unclean, be defiled. - iva *mitnaggis*.

استنجس *ʕistangis* /vt/ to reject for being ritually unclean. - ava *mistangis*.

ن ج ع
نجع *nagɛ* /n pl *nuguuɛ/* village originally settled by bedouin (a term specific to Upper Egypt).

ن ج ف
نجف *nagaf* /coll n/ **1** decorative hanging light-fittings (especially ones with lustres or the like), chandeliers. ‖*leela nagaf*↓ a wonderful evening. **2** *[obsol]* hanging decorative lamps with more than one oil-glass.
نجفة *nagafa* /unit n, pl *-aat/* a decorative hanging light-fitting (usually with lustres), chandelier.

[1] ن ج ل
نجيل *nigiil* /n/ any of a number of types of grass (including couch grass, Bermuda grass and orchard grass).
نجّل *naggil (i)* **1** /vt/ to free of *nigiil*. *laazim ninaggil ig-gineena ɛaʃaan if-fagar yikbar* we should clear the garden of grass to let the trees grow. **2** /vi/ to grass, produce grass. *ʃig-gineena naggilit wif-fagar kibir* the garden became grassy and the trees grew. - vn *tangiil*; ava *minaggil*.
اتنجّل *ʃitnaggil* /vi/ to be freed of *nigiil*. - iva *mitnaggil*.

[2] ن ج ل
نجل *nagl* /n pl *ʃangaal/* **1** son. **2** *ʃangaal* /pl n/ (one's) children, offspring.

[3] ن ج ل see ء ن ج ى ل : *mangaliyya*

[4] ن ج ل see [1] م ن ج ل : *mangal, mangala*

[1] ن ج م
نجم *nagam (i)* /vt/ to jinx, put the evil eye on. *dool naas wihʃiin nagamuu-na w-ħasaduu-na* they are bad people, they've jinxed us and put the evil eye on us. - vn *nagm*; ava *naagim*; pva *manguum*.
نجمة *nagma* /inst n, pl *-aat/* a jinx.
نجم *nigm* /n pl *nuguum/* **1** *[astrol]* star, planet. *ħisaab in-nuguum* (or *in-nigm*) horoscope. *nigm-u ɛaali* his star is riding high, he's in luck. **2** (also *nagm*) male film-star.
نجمة *nigma* /n pl *-aat, nuguum, niguum/* **1** star. ‖*nigma ʃumm[i] deeel* comet. - *min in-nigma* since the crack of dawn. - *warraa nuguum iḍ-ḍuhr* he made him see stars. - *bi-yɛidd in-nuguum* he's daydreaming. - *nigmit il-baħr* starfish. - *naṭṭit in-nigma [athl]* spread-eagle jump. - *ʃams[i] w-ɛamar wi-nguum* sparklers. - *nuṣṣ[i] nigma* motif in panelling (see Pl.G, 12). **2** (also *nagma*) female film-star.
نجماية *nigmaaya* = *nigma*.

نجمى *nigmi* /adj/ stellar.
اتنجم *ʃitnagam* /vi/ to be jinxed, become the victim of the evil eye. - iva *mitnigim*.
نجّم *naggim* /vi/ **1** to practise astrology. **2** *[joc]* to guess, surmise. - vn *tangiim*; ava *minaggim*.
منجّم *munaggim* /n */ astrologer. *kadab il-munaggimiin wa-law sadaqu [prov]* the astrologers are (always) lying even when they foretell the future correctly (since that only happens by chance).
اتنجّم *ʃitnaggim* /vi/ (impersonal) passive of *naggim*. *miʃ di l-masaaʃil illi yitnaggim fiiha* these are not matters for guessing. - iva *mitnaggim*.

[2] ن ج م
منجم *mangam* /n pl *manaagim/* mine, pit.

ن ج ه see م ن ج ه : *mangaha*

ن ج و see ن ج ى : *nagwa*

ن ج ى
نجى *naga, nigi (i, a)* /vi/ to survive, escape. *kaan fi-ʃutubiis ɛamal ħadsa w-naga* he was in a bus that was involved in an accident, but he survived. *naga b-gild-u* he escaped with his skin, he had a narrow escape. - vn *nagaah, nagayaan*; ava *naagi*.
نجاة *nagaah* /n/ escape. ‖*ħabl[i] nagaah* life-line. *ħizaam nagaah* life-belt.
نجوى *nagwa* /fem n, pl *-aat/* innermost desire. *nagwaa-ya* or *nagwit-i* my innermost desire. *yiɛlam bis-sirr[i] win-nagwa* He (God) knows every secret and desire.
منجاة *manga[2]* /n pl *manaagi/* haven, refuge.
نجّى *nagga* /vt/ **1** to save, rescue. *ʃilaah-i ynaggii-k [beggars]* God save you! (in asking for alms). **2** to give (s.o.) a treat after a period of austerity. *naggi nafs-ak bi-ʃakla kwayyisa* treat yourself to a good meal! - vn *tangiyya*; ava *minaggi*.
منجّى *munaggi* /n/ Saver, Rescuer (epithet of God). *ya munaggi* God preserve us!
اتنجّى *ʃitnagga* /vi/ **1** to be saved, be rescued. **2** to give oneself a treat after a period of austerity. - ava/iva *mitnaggi*.
ناجى *naaga* /vt/ to talk to (one's love or an intimate friend) softly and affectionately. - vn *minagiyya, munagaah*; ava *minaagi*.
اتناجى *ʃitnaaga* /vi/ **1** to speak in a soft and affectionate manner. **2** to be spoken to softly and affectionately. - ava/iva *mitnaagi*.

استنجى ʕistanga /vi/ to wash the anus and genitals after defecating (i.e. to save oneself from defilement). - vn ʕistinga; ava *mistangi*.

ن ح ت

نحت *naḥat (a)* /vt/ **1** to gnaw. *qaaʕid yinḥat (fi)l-ʕaḍma zayy il-kalb* he is gnawing away at the bone (just) like a dog. *xud-lak kuuz dura wi-nḥat-u* take a corn cob and gnaw it. **2** to hew, work, sculpt (stone). - vn *naḥt, naḥataan*; ava *naaḥit*; pva *manḥuut*.

نحت *naḥt* /n/ sculpture.

نحتة *naḥta* /pl *-aat*/ instance noun of *naḥt*.

نحّات *naḥḥaat* /n */ **1** stone-mason. **2** sculptor. **3** *[deris]* one who is given to gnawing bones. *ya ʃaḥḥatiin ya naḥḥatiin [abus]* you hungry beggars!

انتحت ʕitnaḥat /vi/ **1** to be hewn, be worked (of stone). **2** to be gnawed. - iva *mitniḥit*.

نحّت *naḥḥat* /vt/ **1** to cause to gnaw. **2** to gnaw hard or repeatedly. - vn *tanḥiit*; ava/pva *minaḥḥat*.

انتحّت ʕitnaḥḥat /vi/ passive of *naḥḥat*. - iva *mitnaḥḥat*.

ن ح ح

نح *naḥḥ (i)* /vi/ to moan, whine. *ʕil-waad da kull[i] ma ḥadd[i] ykallim-u yʕayyaṭ wi-yiḥḥ* every time anyone says anything to that kid he starts crying and whining. - vn *naḥḥ, naḥaḥaan*; ava *naaḥiḥ*.

نحّة *naḥḥa* /inst n, pl *-aat*/ a whine, a moan.

ن ح ر

نحر *naḥar (a)* /vt/ **1a** to eat away, erode, corrode. *ʕil-mayya naḥarit il-xaʃab* the water rotted the wood. **1b** to affect deeply, get to, catch on the raw. *bukaa-ha naḥar ʠalb-i* her crying wrung my heart. *naḥartuu-ni bi-lli ʕamaltuu* you've made me quite mad by what you did. **2** to swindle, cheat (over money). *naḥaruu-na f-qiṭaʕ il-ɣiyaar* they robbed us when they charged us for the spare parts. **3**† to slaughter (an animal) by cutting the throat. ‖*yoom in-naḥr = ʕiid il-ʕaḍḥa* (q.v.). - vn *naḥr*; ava *naaḥir*; pva *manḥuur*.

منحر *manḥar* /n pl *manaaḥir*/ yoke (of a garment).

انتحر ʕitnaḥar /vi/ passive of *naḥar*. - iva *mitniḥir*.

نحّر *naḥḥar* **1** /vt/ to eat away or erode extensively or repeatedly. *ʕis-suus ʠaʕad yinaḥḥar fid-dulaab li-ɣayit ma wiʠiʕ* the woodworm kept eating away at the cupboard until it collapsed. **2** /vi/ to be very deeply affected emotionally. - vn *tanḥiir*; ava/pva *minaḥḥar*.

انتحّر ʕitnaḥḥar /vi/ to be eaten away or eroded extensively or repeatedly. - iva *mitnaḥḥar*.

ناحر *naaḥir* /vt/ to be in constant conflict with. *ʕil-ɣiira bi-txallii-hum dayman yinaḥru (f-)baʕḍ* jealousy keeps them constantly at one another's throats. - vn *minaḥra*; ava/pva *minaaḥir*.

اتناحر ʕitnaaḥir /vi/ **1** to be in constant conflict (with one another). **2** to be disputed with. - ava/iva *mitnaaḥir*.

انتحر ʕintaḥar /vi/ to commit, or attempt to commit, suicide. - vn *ʕintiḥaar*; ava *mintiḥir*.

انتحارى ʕintiḥaari /adj/ suicidal, pertaining to suicide. *ʕamaliyyaat intiḥariyya* suicide missions.

[1] ن ح س

نحس *naḥas (a)* /vt/ to bring bad luck upon. *naḥast-i-ni min yoom ma geet tiftaɣal maʕaaya* you've brought me bad luck from the very day you started to work with me. - vn *naḥs, naḥasaan*; ava *naaḥis*; pva *manḥuus*.

نحس *naḥs* /n/ ill omen, bad luck. *kaanit saaʕit naḥs is-saaʕa lli ʕrift-u fiiha* it was an accursed hour in which I got to know him. - /adjectivally/ *sana naḥs* an ill-omened year.

منحوس *manḥuus* /adj * and pl *manaḥiis*/ luckless. *ʕil-manḥuus manḥuus wi-law ʕallaʠu ʕala baab daar-u fanuus [prov]* a person who is (meant to be) unlucky remains unlucky (no matter what), even if they hang a lantern over the door of his house.

أنحس ʕanḥas /el/ more/most unlucky or ill-omened.

اتنحس ʕitnaḥas /vi/ to be brought bad luck. - iva *mitniḥis*.

نحّس *naḥḥis* /vi/ to become unlucky or plagued with misfortune. *ʕil-ḥaala naḥḥisit maʕaa wi-kull[i] yoom yixsar ʕaktar* things have got really bad for him and every day he loses more. - vn *tanḥiis*; ava/pva *minaḥḥis*.

[2] ن ح س

نحاس *naḥaas, niḥaas, nuḥaasˆ* /n/ **1** copper; particularized as *naḥaas ʕaḥmar*. **2** brass; particularized as *naḥaas ʕaṣfar*. — /coll n/ **3** copperware.

نحاسة *naḥaasa, niḥaasa* /n pl *-aat*/ **1** *[bank]* copper token bearing a serial number issued to a customer in a bank against a cheque or cheques handed in for cashing. **2** *[mus]* kettledrum. **3** a piece of copper or brass.

نحاسى *naḥaasi, niḥaasi, nuḥaasiˆ* /adj/ **1** made of copper or brass. *ʕumla naḥasiyya* copper coins. *ʕalaat nuḥasiyya [mus]* brass wind instruments. **2** coppery, brassy (in colour).

نحّس *naḥḥas* /vi/ to become like copper or brass (in colour or character). *raas-u naḥḥasit* his head (went bald and) turned a coppery colour. ‖*gild-u mnaḥḥas* he's tough, he's resilient. - ava/pva *minaḥḥas*.

ن ح ف

نحف *niḥif (a)* /vi/ to become thin, become emaciated. *wiff-ak niḥif fiwayya* your face has become somewhat thin. - vn *naḥaafa, naḥafaan*.

نحافة *naḥaafa* /n/ thinness, leanness, skinniness.

نحيف *naḥiif* /adj pl *nuḥaaf, nuḥafa*/ thin, lean, skinny. *ʕil-waad naḥiif ziyaada ɛan il-lizuum* the boy's too thin.

أنحف *ʔanḥaf* /el/ more/most thin, lean or skinny.

استنحف *ʕistanḥaf* /vt/ **1** to reject for being too thin. **2** to select for thinness. - ava *mistanḥaf*.

ن ح ل [1]

نحل *naḥal (a)* **1** /vt/ to wear bald, wear threadbare. *ʕid-dawa naḥal raas-i* the medicine made my hair fall out. *rukbit il-banṭaloon manḥuula* the knees of the trousers are worn out. **2** /vi/ to become threadbare. *ʕil-qamiiṣ naḥal mil-yaaqa* the shirt wore out at the collar. ‖*gism-i naḥal mil-ɛaya* my body became thin because of the illness. - vn *naḥl, naḥalaan*; ava *naaḥil*; pva *manḥuul*.

نحلة *naḥla[1]* /pl *-aat*/ instance noun of *naḥl*. *naḥalu raas-u naḥla sooda ma-xalluu-f fiiha wala ʃaɛra* they really polished his head for him; there was not a hair left!

انتحل *ʕitnaḥal* /vi/ to be worn bald, be worn threadbare. - iva *mitniḥil*.

ن ح ل [2]

انتحل *ʕintaḥal: ʕintaḥal faxṣiyyit(-u)* to pose as (s.o.), take on (s.o.'s) identity. *ʕintaḥal faxṣiyyit duktoor wi-ftaxal fi-mustaʃfa* he masqueraded as a doctor and worked in a hospital. - vn *ʕintiḥaal*; ava *mintiḥil*.

ن ح ل [3]

نحل *naḥl* /coll n/ bee(s).

نحلة *naḥla[2]* /unit n, pl *-aat*/ **1** a bee. **2** a spinning top.

نحّال *naḥḥaal* /n * and pl *naḥḥaala*/ bee keeper.

منحل *manḥal* /n pl *manaaḥil*/ apiary.

ن ح ن

نحن *naḥnu* /pron of 1st pers pl/ we. *naḥnu huna* phrase used by youths in trying to attract the attention of girls in the street. *naḥnu huna ya sitt* phrase used by a husband to his wife, implying that she ignores his authority.

ن ح ن ح

نحنح *naḥnaḥ* /vt/ to take (a child) to defecate or urinate. *ruuḥ naḥnaḥ il-ɛayyil* take the kid to the bathroom. ‖*ʕil-ɛarabiyya di naḥnaḥit-u w-xarramit-u dihn[i] qalb-u* this car drained him of every last penny he owned. - vn *naḥnaḥa*; ava/pva *minaḥnaḥ*.

اتنحنح *ʕitnaḥnaḥ* /vi/ to clear one's throat, say 'ahem'. - vn *tinaḥniiḥ*; ava *mitnaḥnaḥ*.

استنحنح *ʕistinaḥnaḥ↓* = *ʕitnaḥnaḥ*. - ava *mistinaḥnaḥ*.

ن ح و

نحو *naḥw↑* /n/ **1** grammar (of Arabic). **2** syntax (of Arabic). — /prep/ **3** towards, with respect to. *waagibat-hum naḥw[i] balad-hum* their duties towards their country.

نحوى *naḥwi↑* /adj/ **1** grammatical. **2** syntactical.

نحوجى *naḥwagi* /adj pl *-yya*/ *[deris]* given to speaking in elevated language.

نحوىّ *naḥawi↓* **1** /adj invar/ pompous, posh (of speech). *kalaam-u naḥawi* he talks posh. **2** *ʕin-naḥawi* /n/ posh elevated language. *bi-yitkallim bin-naḥawi* he talks posh.

ن ح ى

ناحية *naḥya* /n pl *nawaaḥi*/ **1** end, side. *ʕil-musmaar bi-yitribiṭ min in-naḥyiteen* the bolt is fastened at both ends. *wiqift[i] fin-naḥya l-yimiin min if-faariɛ* I stood on the right-hand side of the street. *hiyya ɛamla zayy il-fallaaya min in-naḥyiteen* it looks like a fine-tooth comb at either end. **2** aspect, respect, regard. *min in-naḥya d-dawliyya* from the international point of view. *ʕiṭṭammin min naḥyit-ha* he was reassured as far as she was concerned. **3** /also pl *ʔanḥaaʃ↑*/ place, locality. *ʕibn in-naḥya* a local, one from the locality. *fi-gamiiɛ ʔanḥaaʃ ig-gumhuriyya* in all parts of the republic.

¶ *naḥyit* /prep/ in the direction of, towards. *baṣṣ[i] naḥyit-ha* he looked towards her. *ʕiltafatt[i] naḥyit il-baab* I turned towards the door. *maama xaragit gary[i] naḥyit is-suuq* Mother rushed off in the direction of the market.

نحّى *naḥḥa (i)* /vt/ to put aside, remove. *ʕil-waziir naḥḥaa bɛiid li-suuʃ siluuk-u* the minister removed him (from his post) for his bad conduct. - vn *tanḥiyya, tanḥiya*; ava/pva *minaḥḥi*.

اتنحّى *ʕitnaḥḥa* /vi/ **1** to step aside, step down (from an office). **2** to be put aside, be removed. - ava/iva *mitnaḥḥi*.

ن خ ب [1]

نخب *naxb* /n pl *ʔanxaab*/ toast. *ʃiribna naxb iṣ-ṣadaaqa* we drank a toast to friendship.

نخبة *nuxba* /n pl *nuxab*/ selection, chosen group, select few. *dool nuxba mumtaaza min id-dakatra* these are a

select group of doctors.
ناخب *naaxib↑* /n */ elector.
انتخب *ʕintaxab* /vt/ **1** to vote for. *ʕana ntaxabt-u laakin ma-nagaḥ-ʃ* I voted for him but he was unsuccessful. **2** to elect. *ʕintaxabuu raʕiis il-lagna* they elected him chairman. — /the literary passive form occurs/ *ḥa-yuntaxab il-marra di* he will be elected this time. - vn *ʕintixaab*; ava *mintixib*; pva *muntaxab*.
انتخاب *ʕintixaab* /n pl *-aat*/ election.
انتخابي *ʕintixaabi* /adj/ electoral. *dayra ntixabiyya* electoral ward, constituency. *gawla ntixabiyya* election campaign tour.
منتخب *muntaxab* /n/ *[sport]* team selected from the best players of a number of clubs. *muntaxab il-gümhuriyya* the team selected from the various clubs in the Republic to form the national team.
استنخب *ʕistanxab↓* = *ʕintaxab*. - vn *ʕistinxaab*; ava *mistanxab*.

ن خ ب ²
نخب *naχab (i)* /vt/ to bore into. *ʕis-suus naxab if-ʃagara w-xarram-ha w-baɛd[i] ʃwayya ḥa-tuqaɛ* the woodworm have bored tunnels through the tree and it will soon fall. - vn *naxabaan*; ava *naaxib*; pva *manxuub*.
انتخب *ʕitnaxab* /vi/ to be bored into. - iva *mitnixib*.

ن خ خ
نخ *naxx (i)* /vi/ **1** to kneel (of a quadruped, particularly a camel). **2** to slow down or give way under pressure, become tired and yield. *ʕis-sitt ik-kibiira naxxit min kutr if-fuxl[i] w-ma-qidrit-f[i] tkammil* the old woman gave way under the heavy work-load and could not continue. *ʕil-ɛarabiyya naxxit mil-mafawiir* the car packed up from being run too much. - vn *naxx, naxaxaan*; ava *naaxix*.
نخّخ *naxxax* /vt/ **1** to cause a quadruped to kneel. **2** to cause to slow down or give way, cause to become tired and yield under pressure. *kutr if-fuxl[i] naxxax-u* the pressure of work made him flag. - vn *tanxiix*; ava/pva *minaxxax*.
انتخّخ *ʕitnaxxax* /vi/ passive of *naxxax*. - iva *mitnaxxax*.

ن خ ر ¹
نخر *naxar[1] (u)* /vi/ *[coarse]* to grunt, snort. - vn *naxr*; ava *naaxir*.
منخور *manxuur* = *minxaar*.
منخار *minxaar* /n pl *manaxiir*/ nostril, (loosely also) nose. *ʕir-raagil da minxaar-u kbiir qawi* this man has a very big nose.
مناخير *manaxiir* /pl n/ nose. *manaxiir-i sayba* my nose is running. ‖*gaab manaxiir-u fit-turaab* he humiliated him. - *rooḥ-u baqit fi-manaxiir-u* he became furious with exasperation. - *manaxir-hum fis-sama* their noses are in the air, they're stuck-up.

ن خ ر ²
نخر *naxar[2] (u)* /vt/ to bore into, burrow through. *ʕis-suus naxar sinaan-ak* decay has rotted your teeth. - vn *naxr*; ava *naaxir*; pva *manxuur*.
انتخر *ʕitnaxar* /vi/ to be bored into, be burrowed through. - iva *mitnixir*.

ن خ ر ب
نخرب *naxrab* **1** /vi/ to rummage, scrabble. *ʕana saamiɛ firaan bi-tnaxrab wara d-dulaab ik-kibiir* I hear mice scuttling behind the big cupboard. ‖*fakkeet ir-radyu w-naxrabt[i] fii fwayya ʕaḥaawil ʕaṣallaḥ-u ma-qdirt[i]-ʃ* I took the radio apart and tinkered about with it trying to fix it, but I couldn't. **2** /vt/ to bore into. *ʕis-suus naxrab il-xaʃab* the woodworm tunnelled through the wood. - vn *naxraba*; ava/pva *minaxrab*.
انتخرب *ʕitnaxrab* /vi/ **1** (impersonal) passive of *naxrab* 1. *ʕit-tilivizyoon dayman ɛaayiz yitnaxrab fi-sluuk-u l-midaldila di ɛaʃaan yiftaxal* these dangling wires always need to be played about with for the television set to work. **2** to be bored into. - vn *tinaxriib*; iva *mitnaxrab*.

ن خ ز
نخز *naxaz (u)* /vt/ to poke, prod. *ʕil-walad bi-yɛayyaṭ ɛaʃaan ʕaxuu naxaz-u f-gamb-u* the boy's crying because his brother prodded him in the side. - vn *naxz, naxazaan*; ava *naaxiz*; pva *manxuuz*.
نخزة *naxza* /inst n, pl *-aat*/ a prod, a poke.
انتخز *ʕitnaxaz* /vi/ to be poked, be prodded. - iva *mitnixiz*.
نخّز *naxxiz* /vt/ to poke or prod repeatedly. - vn *tanxiiz*; ava/pva *minaxxiz*.
انتخّز *ʕitnaxxiz* /vi/ to be poked or prodded repeatedly. - iva *mitnaxxiz*.

ن خ س
نخس *naxas (u)* /vt/ to goad, prod, prick. - vn *naxs, naxasaan*; ava *naaxis*; pva *manxuus*.
نخسة *naxsa* /n pl *-aat*/ goad.
انتخس *ʕitnaxas* /vi/ to be goaded, prodded or pricked. - iva *mitnixis*.
نخّس *naxxas* /vt/ to prod, prick or goad repeatedly. - vn *tanxiis*; ava/pva *minaxxas*.

اتنخّس ʕitnaxxas /vi/ to be prodded, pricked or goaded repeatedly. - iva *mitnaxxas*.

ن خ ش و ش

نخشوش *naxʃuuʃ* /n pl *naxaʃiiʃ*/ **1** gill. **2** nasal cavity. *ʃilʕit il-mayya f-naxaʃiiʃ-i* the water got up my nose. - also *naxʃuuʃ*.

[1] ن خ ع

نخع *naxaʕ (a)* /vt/ **1** to heave against (s.th.) till it yields. *ʃig-gamuusa naxaʕit is-saqya* the buffalo heaved over the water-wheel. ‖ *ʃil-muṭrib qaʕad yinxaʕ ṭuul il-leel* the singer went on braying all night long. **2** to deal (s.o.) a toppling blow. *naxaʕ-u kaff* he gave him a slap that sent him reeling. — /vi/ **3** to tell whoppers, tell unbelievable lies. - vn *naxʕ, naxaʕaan*; ava *naaxiʕ*.

أنخع ʕanxaʕ /el/ more/most fibbing or bragging.

نخّاع *naxxaaʕ* /adj */ fibber, braggart.

اتنخع ʕitnaxaʕ /vi/ passive of *naxaʕ* 1 and 2. - iva *mitnixiʕ*.

نخّع *naxxaʕ* /vi/ to jerk, judder. *ʃil-ʕarabiyya naxxaʕit minni* the car jerked forward out of my control. - vn *tanxiiʕ*; ava *minaxxaʕ*.

[2] ن خ ع

نخاع *nuxaaʕ* /n/ bone marrow.

نخاعي *nuxaaʕi* /adj/ *[anat]* **1** spinal. *saayil nuxaaʕi* spinal fluid. **2** pertaining to bone marrow.

[1] ن خ ل

نخل *naxal (u)* /vt/ to sift, sieve. *bi-yunxulu d-diqiiq* they are sifting the flour. - vn *naxl, nixiil, naxalaan*; ava *naaxil*; pva *manxuul*.

نخالة *nuxaala* /n/ siftings of flour, bran. ‖ *ma-yiswaa-ʃ malw[i] widn-u nuxaala* he's not worth as much bran as would fill his ear! - *zayy in-nuxaala l-mabduura* scattered far and wide and in great abundance, as in *ʃil-baqq[i] zayy in-nuxaala l-mabduura* the bedbugs are all over the place!

منخل *manxul* /n pl *manaaxil, manaxiil*/ flour-sifter, flour-sieve.

اتنخل ʕitnaxal /vi/ to be sifted, be sieved. - iva *mitnixil*.

[2] ن خ ل

نخل *naxl* /coll n/ palm tree(s).

نخلة *naxla* /unit n, pl *-aat*/ a palm tree.

نخلاية *naxlaaya* = *naxla*.

نخيل *nixiil↑* = *naxl*.

ن خ م

نخامة *nuxaama* /n/ piece of phlegm.

اتنخّم ʕitnaxxam /vi/ to clear one's throat of phlegm noisily, hawk. - ava *mitnaxxam*.

ن خ ن خ

نخنخ *naxnax* **1** /vt/ to cause to yield or lose resolution. *ma-naxnax-uu-ʃ ʏeer il-baqʃiiʃ* it is only the tip that made him change his mind. **2** /vi/ to yield, lose resolution. - vn *naxnaxa*; ava/pva *minaxnax*.

اتنخنخ ʕitnaxnax /vi/ to lose resolution. - ava *mitnaxnax*.

ن خ و ر

نخور *naxwar* /vi/ to probe (e.g., with the finger). *baṭṭal naxwara f-manaxiir-ak* stop rooting around (with your finger) in your nose! ‖ *naxwaru fil-mawḍuuʕ li-ʏaayit ma gaabu ʕaxr-u* they probed into the matter till they got to the bottom of it. - vn *naxwara*; ava *minaxwar*.

اتنخور ʕitnaxwar /vi/ (impersonal) passive of *naxwar*. *ʕil-manaxiir lamma yitnaxwar fiiha ktiir tiwram* if you pick your nose a lot it will swell. - iva *mitnaxwar*.

[1] ن د ب

ندب *nadab[1] (i)* **1** /vt/ to bewail. *nadabu l-ḥaẓẓ illi xanhum* they bewailed the bad luck that had let them down. **2** /vi/ to utter words of lamentation. *raaḥit nadba ʕala goz-ha* she started to wail over her (dead) husband. - vn *nadb, nadabaan*; ava *naadib*.

نديب *nidiib* /n/ mourning, bewailing, lamentation.

ندّابة *naddaaba* /n pl *-aat, naddaaba*/ hired female mourner.

اتندب ʕitnadab[1] /vi/ to be bewailed. - iva *mitnidib*.

[2] ن د ب

ندب *nadab[2] (i)* /vt/ to delegate, commission. *ʕana nadabt-ak ʕanni* I've made you my representative. - vn *nadb, nadabaan*; ava *naadib*; pva *manduub*.

ندبة *nadba* /pl *-aat*/ instance noun of *nadb*.

مندوب *manduub* /n */ one with delegated powers, delegate, representative. *manduub ʃirka* company representative. *manduub ṣarf* employee authorized to make payments on behalf of his employers.

اتندب ʕitnadab[2] /vi/ to be delegated, be commissioned. - iva *mitnidib*.

انتدب ʕintadab↑ /vi/ to appoint to a post in an outside institution, second. *baqaa-lu ʕafar siniin muntadab ʕanduhum* he's been on secondment to them for ten years. - /the literary passive occurs/ *mumkin tuntadab*

bis-saaɛa you may be seconded by the hour. - vn *ʔintidaab*; ava *mintidib, muntadib*; pva *muntadab*.
انتداب *ʔintidaab* /n pl *-aat*/ mandate, mandatory rule. *filisṭiin kaanit dawla taḥt il-intidaab il-biriṭaani* Palestine was a country under British mandatory rule.

ن د د

ندّ *nidd* /n pl *ʔandaad*/ **1** equal, peer. *laazim tiɛamil-ni muɛamlit in-nidd[i] lin-nidd* you have to treat me as an equal. **2** rival, opponent.
ندّد *naddid* /vi/ to be critical, find fault. *magliṣ if-faɛb[i] naddid bil-maʃariiɛ ig-gidiida* the People's Assembly was up in arms about the new projects. - vn *tandiid*; ava *minaddid*.
اتندّد *ʔitnaddid* /vi/ (impersonal) passive of *naddid*. *ʔil-ʔaɛmaal di laazim yitnaddid biiha* these acts must be condemned. - iva *mitnaddid*.

ن د ر[1]

ندر *nudur, nidir (a)* /vi/ to be rare. *yindar tilaaqi zayyu l-yomeen dool* you rarely find the like of it these days. *miʃ mumkin tilaqii hina ʔilla ma nudur* you can only find him here very rarely. - vn *nuduriyya, nuduura*; ava *naadir*.
نادر *naadir* **1** /adj */ rare. *gamaal naadir* rare beauty. **2** (also *nadra* or *naadir lamma* or *nadra lamma*) modal of rarity. *ʔin ikkallim naadir tifham-u* when he speaks, one can rarely understand him. *naadir lamma tfuuf il-ḥagaat di* you rarely see these things.
نادرة *nadra* /n pl *nawaadir*/ **1** odd tale, strange story. *tuqɛud maɛaa yiḥkii-lak nawaadir kitiira* when you sit with him he tells you a lot of strange tales. ‖ *ʔamma nawaadir* how very strange! **2** eccentricity, odd behaviour. *ʔis-sitt[i] di liiha nawaadir* this lady does some very odd things.
أندر *ʔandar* /el/ rarer/rarest.
اتندّر *ʔitnaddar* /vi/ **1** to muse on or retell funny happenings or strange stories. **2** to make fun. *bi-yitnaddaru ɛala lli ḥaṣal minha l-ʔusbuuɛ illi faat* they make fun of her for what she did last week. - ava *mitnaddar*.

ن د ر[2]

نذر *naḍdar (i)* /vt/ to vow to offer (food or money to the poor or a charitable cause if a wish or prayer is fulfilled). *nadart[i] fuul wi-ɛeeʃ li-ʔumm[i] haaʃim law il-mawḍuuɛ da xiliṣ* I have vowed to offer beans and bread (to the poor) for the sake of Umm Hashim (i.e. Sayyida Zaynab) if this affair is cleared up. - vn *nadr, nadaraan*; ava *naadir*; pva *manduur*.

نذر *nadr* **1** /vn/ ‖*ʔill[i] min in-nadr[i] wi-wfi [prov]* ≈ don't promise more than you can fulfil. **2** /n pl *nuduur*/ **2a** vow. **2b** something dedicated to be offered in fulfilment of a vow.
¶ *nadrin ɛalayya* I vow (to do so-and-so). *nadrin ɛalayya ʔin nagaḥt awazzaɛ laḥma ɛal-fuqara* I vow to distribute meat to the poor if I pass (the exam).
اتندر *ʔitnadar* /vi/ passive of *nadar*. - iva *mitnidir*.

ن د ر[3] see ن ظ ر: *mandara*

ن د ع

ندعة *nidɛa* /n pl *-aat, nidaɛ*/ drop. *nidɛit mayya* a drop of water.
ندّع *naddaɛ* /vi/ to drip. *ma-naṭṭarit-ʃ[i] yadoobak naddaɛit* it didn't rain, there were hardly more than a few spots. - vn *tandiiɛ*; ava *minaddaɛ*.
اتندّع *ʔitnaddaɛ* /vi/ (impersonal) passive of *naddaɛ*. *yiruuḥu l-mustaffa yitnaddaɛ luhum nidɛiteen fi-ɛnee-hum w-xalaṣ* they go to hospital to have a few eye-drops administered and that is that. - iva *mitnaddaɛ*.

ن د غ

ندغ *nadaɣ (u)* (also *madaɣ, maqaɣ*↑) /vt/ to chew. *bi-yunduɣ libaan* he's chewing gum. *duxxaan in-nadɣ* chewing tobacco. - vn *nadɣ, nadaɣaan*; ava *naadiɣ*; pva *manduuɣ*.
ندغة *nadɣa[1]* /pl *-aat*/ instance noun of *nadɣ*.
ندغة *nadɣa[2]* (also *madɣa, maqɣa*↑) /n, pl *-aat*/ chewing tobacco.
ندّاغة *naddaaɣa* /n pl *-aat, nadadiiɣ*/ stickjaw, caramel candy.
اتندغ *ʔitnadaɣ* (also *ʔitmadaɣ, ʔitmaqaɣ*) /vi/ to be chewed. - iva *mitnidiɣ*.

ن د ل[1]

ندل *nadl* /adj pl *ʔandaal*/ low, base, despicable, mean.
أندل *ʔandal* /el/ more/most low, base, despicable or mean.
ندالة *nadaala* /n/ baseness, despicability, meanness.
ندّل *naddil* /vi/ to behave in a low and despicable manner, become low and despicable. *wi-marra waḥda baṣṣeet laqeet-u btada ynaddil maɛaaya* and all of a sudden I found him playing dirty with me. - ava *minaddil*.
استندل *ʔistandil* /vt/ **1** to consider low, mean or despicable. *kull in-naas istandilit-u lamma ma-rḍii-ʃ yitbarraɛ* everybody thought him despicable for not contributing.

2 to select for despicability and meanness. — /vi/ 3 to behave in a scoundrelly manner. - vn *ʕistindaal*; ava *mistandil*.

² ن د ل see م ن د ل: *mandal, mindaala*

ن د م

ندم *nidim (a)* /vi/ to feel regret, feel remorse. *ma-tindam-ʃ*ⁱ *ɛala lli faat* don't cry over spilt milk. - vn *nadaama, nadam, nadamaan*; ava *nadmaan, naadim*.

ندامة *nadaama* /n/ regret, remorse. ‖ *ya nadaama* or *ya nadamt-i [women in trad soc]* ≈ good grief! (an expression of exasperation or surprise). *-ɣabaḥ ḥaal-u nadaama* he became destitute. *-fil-ɛagala n-nadaama [prov]* ≈ haste makes waste.

اتندّم *ʕitnaddim* /vi/ to be regretful, be remorseful. - ava *mitnaddim*.

ن د ه

نده *nadah (a)* /vt and vi/ to call (to), call out (to). *nadaht it-taks* (or *lit-taks*) I hailed the taxi. *ruuḥ indah-u* (or *indah-lu* or *indah ɛalee*) go and call him. - vn *nadh, nadahaan*; ava *naadih*; pva *manduuh*.

ندهة *nadha* /inst n, pl *-aat*/ a call.

النّدّاهة *ʕin-naddaaha* /n/ evil spirit believed to come out at night and call people by their own names and lead them mesmerized to certain death by drowning.

اتنده *ʕitnadah* /vi/ 1 (impersonal) passive of *nadah*. ‖ *ʕil-muɛriba di b-yitnidih ɛaleehā l-yomeen dool* this singer is in demand these days, this singer is popular these days. *ʕil-ḥanaṭiir ma-yitnidih-ʃ*ⁱ *ɛaleeha dilwaɋti* horse-cabs aren't in demand now. 2 to be called (to). ‖ *ʕil-moot ma-yitnidih-ʃ* death is not something one goes looking for. - *ʕil-maxfi l-ism*ⁱ *da lli ma-yitnidih* ≈ that rotten bastard whose name isn't worth mentioning. - iva *mitnidih*.

ن د و¹

ندى *nidi (a)* /vi/ to become moist or damp (particularly with dew). - vn *nadayaan*; ava *naadi*.

ندى *nada*¹ *(i)* /vt/ to afflict with *nadwa*. - vn *nadw*; ava *naadi*; pva *mandi*.

ندى *nada*² /n/ dew. *ya-lli b-nadaa-ki ya ḥilba bi-nada l-ɤeeṭ ya ḥilba [vendor's cry]* dewy fenugreek, fenugreek still with the dew of the fields!

ندوة *nadwa*¹ /pl *nadaawi*/ 1 frost. 2 exudation produced by certain plant pests. *nadwa badriyya* exudation produced by the fungus Alternaria selani. *nadwa ɛasaliyya* honeydew, sticky exudation produced by the aphis called *mann*.

ندويّة *nadawiyya* = *nadwa*.

نادى *naadi*¹ /adj */ 1 damp, moist. 2 blessed with good fortune, blessed with wealth. *baxt-u naadi* he has good luck (with money etc.). *nahaar-ak naadi* have a profitable day!

نداوة *nadaawa* /n/ moisture, dampness.

ندّى *nadda* 1 /vi/ to drizzle. *ʕaḥsan-li ʕaʃiil il-ɤasiil min ɛal-manfar ʕaḥsan id-dinya baayin ɛaleeha ḥa-tnaddi* I'd better take the washing off the line because it looks as if it's going to drizzle. 2 /vt/ *[agric]* to dry (maize) of dew gathered from being out of doors overnight (of the sun). - vn *tandiyya*; ava/pva *minaddi*.

اتندّى *ʕitnadda* /vi/ passive of *nadda* 2. - iva *mitnaddi*.

انتدى *ʕintada* /vi/ to be afflicted with exudations from plant pests. - iva *mintidi*.

استندى *ʕistanda* /vt/ 1 to consider (too) moist or damp. 2 to select for moistness. - ava *mistandi*.

² ن د و see ن د ى: *nadwa*²

ن د ى

ندوة *nadwa*² /n pl *nadawaat*/ discussion group, seminar.

نادى *naadi*² /n pl *nawaadi, ʕandiyya, ʕandiya*/ club. *naadi ryaaḍi* sports club. *naadi sinima* cinema club.

نادى *naada* 1 /vt and vi/ to call (to), call out (to). *ʕil-ʕumm*ⁱ *bi-tnaadi (ɛala* or *li-) ʕawlad-ha* the mother calls (to) her children. *ḥaagib il-maḥkama naada (ɛala) l-muttaham* the court usher called for the defendant. 2 /vi/ to call, call out. *laazim tirudd*ⁱ *ʕawwil ma f-ʃawiif yinaadi* you have to answer as soon as the sergeant calls. *ʕanaadi ʕaɋuul b-aṣallaḥ bawabiir ig-gaaz* I call out saying 'I mend paraffin stoves!' - vn *minadiyya, nida, nidaaʕ*; ava *minaadi*.

¶ *naada ɛala* to cry (wares). *bi-ynaadi ɛak-katakiit* he's hawking chicks through the streets. *-naada bi-* to appeal for. *ʕis-sawra bi-tnaadi b-ziyaadit il-ʕintaag* the revolution calls for increased production.

نداء *nida, nidaaʕ*↑ /n/ call, cry. *ʕilli bi-ybiiɛu fiʃ-ʃaariɛ kull*ⁱ *waaḥid luu nida* each of those who sell (their wares) in the street has a cry.

منادى *minaadi* or *munaadi* /n */ 1 parking attendant. 2 *[obsol]* town-crier, one who announces the decrees of the Sultan etc.

اتنادى *ʕitnaada* /vi/ passive of *naada*. - iva *mitnaadi*.

ن ذ ر see ² ن د ر and ن ز ر

ن ذ ع see ن د ع

ن ذ ل see ¹ ن د ل.

ن ر ج see ن ر ى ج: *nariig*

ن ر ج ى ل
نرجيلة *nargiila* <P *nârgîl*> /n pl *-aat, naragiil*/ narghile, water-pipe.

ن ر ز see ن ر و ز: *naruuz, naruuz, neeruuz*

ن ر ف ز
نرفز *narfiz, narviz* <It *nervoso*> /vt/ to irritate, annoy, set one's nerves on edge. *manzar-u bi-ynarfiz-ni* the (very) sight of him makes me touchy. - vn *narfaza, narvaza*; ava/pva *minarfiz, minarviz*.
نرفز *nirfiz* <Engl *nervous*> /adj invar/ nervy.
اترفز *ʕitnarfiz, ʕitnarviz* /vi/ to behave irritably or become irritable. *ma-titnarfiz-f*^{i} *ɛalayya* don't be bad tempered with me! *b-aḥiss*^{i} *b-ḍarabaat ɑalb-i tiɛla ɑawi lamma ʕatnarfiz* I feel my heart beats pounding faster when I get upset. - ava *mitnarfiz, mitnarviz*.

ن ر ن ج
نارنج *naring* <P *nârang*> /coll n/ Seville orange(s). - also *laring*.

ن ر و ز
ناروز *naruuz, naruuz* (also *neeruz*) <P *nau-roz*> /n/ first day of the Coptic year (11th September). *ʕilli yizraɛ dura fi-naruuz yaaxud ɑaluuḥa min ɣeer kuuz [prov]* he who sows maize at *naruuz* gets a cob without seeds.

ن ر و ى ج
النرويج *ʕin-nurwiig* /prop n/ Norway.
نرويجى *nurwiigi* **1** /adj */ Norwegian. **2** /n */ a Norwegian. **3** /n, no pl/ the Norwegian language.

ن ر ى ج
نريج *nariig: ʃakuuf ʕabu nariig* hammer with a wedge-shaped edge opposite the striking face.

ن ز ح
نزح *nazaḥ (a)* **1** /vt/ to empty (of dirty water or the like). *nazaḥit il-ḥood* she emptied out the basin. *nazaḥu l-bakaburt* they emptied the cesspool. **2**↑ /vi/ to migrate. *nazaḥu mil-balad baɛd il-ḥarb* they left the country after the war. - vn *nazḥ, niziiḥ, nizḥiyya, nazaḥaan*; ava *naaziḥ*; pva *manzuuḥ*.
نزحة *nazḥa* /pl *-aat*/ instance noun of *nazḥ*.
اتنزح *ʕitnazaḥ* /vi/ passive of *nazaḥ* 1. - iva *mitniziḥ*.

ن ز ر
أنذر *ʕanzar* /vt/ to give a warning to. ‖*laqad ʕaɛzara man ʕanzar [prov]* he who who allows you time to mend your ways by giving you a warning has every justification for acting against you if you pay no heed. - vn *ʕinzaar*; ava *munzir*.
انذار *ʕinzaar*^{2} **1** /vn/ ‖*ṣuffaarit ʕinzaar* warning siren. — /n pl *-aat*/ **2** warning. **3** *[pol]* ultimatum.

ن ز ز
نزّ *nazz (i)* **1** /vi/ to ooze out. *ʕiza dust*^{a} *ɛal-ʕarḍ*^{i} *tlaaqi l-mayya bi-tnizz*^{i} *taḥt*^{i} *riglee-k* if you tread on the ground you'll find the water oozes out under your feet. **2** /vt/ to ooze, drip with. *ɑurt-u bi-tnizz*^{a} *ɛaraɑ* his forehead is oozing sweat. ‖*ʕil-fiṭiir bi-ynizz*^{i} *samna* the pastry is saturated with fat. - vn *nazz, nazazaan*; ava *naaziz*.
نزّاز *nazzaaz* /adj/ **1** (too) porous. *ɑulla nazzaaza* a water-pot whose porous texture allows too much water to seep through. **2** leaky, seeping, oozing. *garḥ*^{i} *nazzaaz* an oozing wound. ‖*mara nazzaaza* a woman who is always crying.
نزّز *nazziz* /vi/ to seep, let out liquid continuously. - vn *tanziiz*; ava *minazziz*.

¹ ن ز ع
نزع *nazaɛ*↑ *(a)* /vt/ to withdraw, take away (a right). *nazaɛu minnu milkiyyit il-ʕarḍ* they took from him the right to possess the land. *nazɛ is-silaaḥ* disarmament. - vn *nazaɛaan, nazɛ*; ava *naaziɛ*; pva *manzuuɛ*.
اتنزع *ʕitnazaɛ* /vi/ to be withdrawn (of a right). - iva *mitniziɛ*.
نازع *naaziɛ*! /vt/ to dispute with, quarrel with. *ʕaxuu nazɛ-u ɛala milkiyyit il-ʕarḍ* his brother disputed with him the ownership of the land. - vn *munazɛa, minaazɛa*; ava *minaaziɛ*.
اتنازع *ʕitnaaziɛ* /vi/ **1** to get into a dispute (with one another). **2** to be disputed with. - iva *mitnaaziɛ*.
انتزع *ʕintazaɛ*↑ = *nazaɛ*. - vn *ʕintizaaɛ*; ava/pva *mintiziɛ*.

² ن ز ع
نازع *naaziɛ*^{2} /vi/ to moan. *bi-yxaṭraf mis-suxuniyya w-yifḍal yinaaziɛ* he raves with fever and keeps on moaning. - vn *minazɛa*; ava *minaaziɛ*.

ن ز ف
نزف *nazaf (i)* **1** /vi/ to bleed, haemorrhage. *baɛd il-wilaada fḍilt*^{i} *ʕanzif kitiir* after giving birth I went on

bleeding a lot. *ʕana b-anzif min manaxiir-i* I get nosebleeds. **2** /vt/ to bleed (blood). *nazaft^{i} damm^{i} ktiir* I lost a lot of blood. - vn *niziif, naziif*; ava *naazif*; pva *manzuuf*.

نزيف *niziif, naziifˆ* /n/ haemorrhage.

اتنزف *ʔitnazaf* /vi/ to be lost (of blood). - iva *mitnizif*.

استنزف *ʔistanzifˆ* /vt/ to drain, sap. *ʔif-furb^{i} b-yistanzif ṭaqt-u* drinking is sapping his energy. ‖*ḥarb istinzaaf* war of attrition. - vn *ʔistinzaaf*; ava/pva *mustanzif, mistanzif*; pva *mustanzaf*.

ن ز ل

نزل *nizil (i)* /vi/ **1** to descend, go downward, move downward. *sikkiinit il-maqaṣṣ^{i} b-tinzil ʕala sifl ik-kitaab* the blade of the guillotine comes down on the bottom of the book. *nizlit ʕalee nuqṭiteen mayya* a couple of drops of water fell on it. *ʔil-ʕarabiyya nizlit fi-maṭabb* the car went into a pothole. *bi-yinzilu fil-ḥafr^{i} l-ʏaayit il-manasiib il-maṭluuba* they dig down till they reach the required levels. *ṭaffa n-nuur wi-nizil taḥt il-ʏaṭa* he put out the light and got under the bedcover. *ʔiṭ-ṭariiq bi-yinzil min hina* the road slopes down from here. ‖*nizil ʕalee ʕaraq* he broke out in a sweat. *nizil ʕaleeha damm* she started bleeding. *nizil ʕaleeha l-ḥeeḍ* she started menstruating. **2** to decline, become reduced. *ʔil-ḥaraara nizlit* the temperature went down. *ʔil-ʔasʕaar nizlit* the prices went down. *ʕana ʕammaal naazil fil-xissiyya* I keep losing weight. ‖*nizil min naẓar(-u)* to go down in (s.o.'s) estimation. - *fin-naazil* on the decline, as in *ʔit-tigaara fin-naazil* trade is on the decline, *baqeet fin-naazil li-ʏaayit lamma baqeet ʔamfi b-ʕaṣaaya* I continued to get worse till I reached the stage where I had to walk with a stick. **3** to disembark, dismount. *ʕaawiz ʔanzil ʕand il-midaan* I want to get off at the square. *ʔinzil mit-taksi* get out of the taxi! **4** to depart, set off. *nizilt^{i} mil-beet* I left the house. *nizlu (li-)ʃ-ʃuʏl* they went off to work. *ʔil-muwaẓẓaf naazil ʔagaaza* the official is on holiday. **5** to appear, emerge. *ʔil-mulaakim nizil il-ḥalba* the boxer came out into the ring. *ʔil-fariiq nizil il-malʕab* the team emerged onto the field. *ʔil-muẓahraat mamnuuʕ tinzil if-faariʕ* it is forbidden for the demonstrations to go out onto the street. *ʔisṭuwaana gdiida nizlit (fi-)s-suuq* a new record came out on the market. *ʔil-firaax bi-tinzil ig-gamʕiyya kull^{i} yoom talaat* chickens are available at the co-operative every Tuesday. *ʔis-sitt^{i} fiz-żaar bi-tinzil ʕad-daqqa lli bi-trayyaḥ-ha* a woman at a *zaar* joins in (with the others) when the rhythm that soothes her is played. **6** to reside, lodge. *nizilt^{a} ʕand axuu-ya* I stayed at my brother's. *nizlit fi-lukanda* she stayed at a hotel. **7** preverb with following verbal noun signalling intensity of action. *nizilt^{a} ʕalee ḍarb* or *nizilt^{i} ḍarb^{i} fii* I beat him for all I was worth. *kaan naazil raqṣ* he was absorbed in dancing. *hiyya nazla tawḍiib fi-xilqit-ha* she's busy painting her face. - /elliptically/ *nizilt^{a} ʕalee bil-ʕaṣaaya* I beat him for all I was worth with a stick. - vn *nuzuul, nazla*; ava *naazil*.

¶ *nizil ʕala* to submit to. *nizilt^{a} ʕala kalaam-u* I complied with what he said. *nizilt^{a} ʕala ḥukm abuu-ya* I submitted to my father's decision. *nuzuulan ʕala* in compliance with, as in *ḥ-araʃʃaḥ nafs-i nuzuulan ʕala raʏbit-kum* I'll stand for election in compliance with your wish.

نزلة *nazla* /n pl *-aat*/ infection. *nazla maʕawiyya* intestinal infection. *nazla ʃaʕbiyya* (or *fuʕabiyya*) bronchitis. *nazlit bard* attack of cold.

منزول *manzuul* /n pl *manaziil*/ *[obsol]* compound of opium, hashish and spices.

نزلاية *nazalaaya* /n pl *-aat*/ slope, path sloping downwards.

نزيل *naziil* /n pl *nuzala, nuzalaa*ʔˆ/ temporary resident (e.g., in an hotel, prison, hospital).

منزل *manzilˆ* /n pl *manaazil*/ residence, home. *nimrit il-manzil* home (telephone) number. ‖*ḥamaam manaazil* domesticated pigeons.

منزلي *manzili* /adj/ household. *ʔadawaat manziliyya* household utensils. *ḥaʃaraat manziliyya* household insects. *tadbiir manzili* domestic science.

منزل *manzal* /n pl *manaazil*/ slope, path sloping downwards.

نزّل *nazzil* /vt/ **1** to close up, bring, take or send down, lower. *bi-ynazzilu l-ʕaff* they are bringing down the luggage. *nazzilnaa-ha min ʕal-babuur* we took it off the primus stove. *nisiib-u ʕifriin yoom wi-nnazzil ʕalee taalit mayya* we leave it twenty days and then water it for the third time. **2** to reduce. *ʔin-naṭara nazzilit il-ḥaraara* the rain brought down the temperature. *nazzil lina t-taman* knock something off the price for us. **3** to cause to disembark. *ʔik-kumsari nazzil-hum mil-qaṭr* the conductor put them off the train. **4** to cause to depart, cause to set off. *ʔeeh illi nazzil-ak ʕaṣ-ṣubḥ* what's brought you out so early in the morning? **5** to cause to appear or emerge. *kull^{i} sana bi-ynazzilu marka gdiida* each year they put out a new model. — /vi/ **6** to ejaculate. **7** to pour out (of sweat). *ʔil-ʕaraq nazzil ʕala gism-u wil-ḥaraara xaffit* sweat poured out of his body and the temperature subsided. - vn *tanziil*; ava *minazzil*.

تنزيلة *tanziila* /pl *-aat*/ instance noun of *tanziil*.

اتنزّل *ʔitnazzil* /vi/ passive of *nazzil*. - iva *mitnazzil*.

نازل *naazil* /vt/ to have a duel with, contest. *tinazil-ni fig-gary* will you race me? - vn *minazla*; ava *minaazil*.

اتنازل *ʔitnaazil, tanaazal↑* /vi/ **1** to act condescendingly. **2** to give way, step down. *miʃ ḫ-atnaazil ɛan ḫaqq-i* I will not forego my rights. *ʔitnaazil ɛan il-ɛarʃ* he abdicated the throne. **3** to contest (with o.a.). **4** to be fought against. - vn *tanaazul*; ava/iva *mitnaazil*.

تنازلى *tanaazuli* /adj/ in descending order. ‖*ɛadd[i] tanaazuli* count-down.

أنزل *ʔanzal* **1** /vt/ to inspire, reveal (of God). *kalaam ma-ʔanzal allaahu bihi min sulṭaan* ≈ rubbish, nonsense. ‖*ḫikaaya ma-ʔanzal allaahu biha min ṭiiz gaḫḫ [coarse]* ≈ bullshit. **2** /vi/ to ejaculate. - vn *ʔinzaal*; ava *munzil*; pva *munzal*.

منزل *munzal* /adj/ divinely bestowed (especially of the Koran). ‖*kalaam-u munzal* his word is law, no one dares to disobey him.

استنزل *ʔistanzil↓* **1** /vt/ to deduct (a sum, from a price). *ma-tistanzil lina ɛirfeen* knock a couple of piastres off for us! **2** /vi/ to give way, step down. *miʃ mumkin yistanzil ɛan illi f-raas-u* he would never give up what he has in mind. - ava *mistanzil*.

ن ز ه

نزهة *nuzha* /n pl *-aat, nuzah*/ promenade, outing.

نزهى *nuzahi* /adj pl *-yya*/ **1** spendthrift, prodigal. *maal ik-kunazi lin-nuzahi [prov]* ≈ the miser's wealth is spent by his prodigal heir. **2** elegant and fun-loving. *ʔaqraɛ wi-nuzahi [prov]* his head is afflicted with ringworm but he's always dressed to kill (of one who is oblivious to his own shortcomings).

نزاهة *nazaaha* /n/ honesty, probity, integrity.

نزيه *naziih* /adj pl *nuzaha*/ honest, scrupulous.

أنزه *ʔanzah* /el/ more/most honest or scrupulous.

نزّه *nazzih* or *nazzah* /vt/ **1** to give pleasure and enjoyment to. *ʔana maɛaaya ɛirfeen wi-laazim ʔanazzih nafs-i* I have a bit of money so I must give myself a good time. **2** to dissociate (s.o., from s.th. undesirable). *ʔil-waaḫid laazim yinazzih nafs-u ɛan dool* one must avoid them like the plague. - vn *tanziih*; ava *minazzih, minazzah*.

اتنزّه *ʔitnazzih* or *ʔitnazzah* /vi/ passive of *nazzih*. - iva *mitnazzih, mitnazzah*.

منتزه *muntazah* /n pl *-aat*/ park, public garden.

ن ز و

نزوة *nazwa* /n pl *nazawaat*/ **1** whim, caprice. *di nazwit ʃabaab wi-bukra yiɛɛal* it's just a youthful whim; he'll know better when he's older. **2** outburst, surge.

[1] ن س ا

نسا *nisa[1]: ɛirq in-nisa* sciatica.

[2] ن س ا see [1] ن س و : *nisa[2]*

[1] ن س ب

نسب *nasab[1] (i)* /vt/ to trace back to. *da b-yinsibuu li-baxt-a-ha ʈ-ʈayyib* this they attribute to her good fortune. - vn *nasab*; ava *naasib*; pva *mansuub*.

نسب *nasab[2]* /n/ **1** pedigree, lineage, family connections. *nasab-u yirgaɛ lil-mamaliik* his line goes back to the Mamelukes. **2** relationship by marriage. *ʔabu nasab [joc]* epithet of a male in-law. *ʔin-nasab ɛaṣab [prov]* (one's) in-laws are as valuable as (one's) blood-relatives. ‖*ʔil-ḫasab win-nasab* social standing.

منسوب *mansuub* /n pl *manasiib*/ level (in surveying etc.). *mansuub il-mayya* the water level. *mansuub il-ḫafr* the level of excavation.

نسيب *nisiib* /n pl *nasaayib*/ male relative-in-law.

منسّب *minassib* /adj */ of good parentage, of good pedigree.

ناسب *naasib[1]* /vt/ to marry into (a family). *naasib naas muḫtaramiin* he married into a respected family. ‖*ʔin ma-kaan lak ʔahl[i] naasib [prov]* if you have no (worthy) family acquire one by marriage. - vn *minasba*; ava/pva *minaasib*.

اتناسب *ʔitnaasib[1]* /vi/ passive of *naasib[1]*. - iva *mitnaasib*.

انتسب *ʔintasab↑* /vi/ **1** to be associated, associate oneself. *ʔaɛḍaaʔ muntasibiin* associate members. **2** *[acad]* to enrol as an external student.

[2] ن س ب

نسبة *nisba* /n pl *nisab*/ proportion, degree, rate. *ʔil-fannaniin luhum nisab min il-mabiɛaat* the artists get payments based on percentages of the sales. *nisbit il-kiffiyya* the degree of shrinkage. *nisbit il-ʔiɛfaaʔ iḍ-ḍariibi* the rate of tax exemption. *nisba miʔawiyya* percentage. ‖*bin-nisba li-* for, as for, as far as ... is concerned, as in *ʔil-libs[i] da lir-riggaala ʔamma bin-nisba lis-sittaat fa-b-yilbisu ɛaadi* this costume is for the men; as for the women, they dress ordinarily, *huwwa-nta bin-nisba-lna ʃwayya* do you imagine you're nothing to us?

نسبى *nisbi* /adj/ proportional, relative.

¶ *nisbiyyan* /adv/ proportionately, relatively.

أنسب *ʔansab* /el/ more/most appropriate, more/most fitting.

ناسب *naasib[2]* /vt/ to be suitable (for), be appropriate (to). *fil-waqt il-munaasib* at the appropriate time.

bi-nṣammim li-kull[i] waḥda f-fakl illi yinasib-ha for each woman we design the style that suits her. - vn *munasba*; ava *minaasib, munaasib*.

مناسبة *munasba* /n pl *-aat/* occasion. *rakʕiteen bi-munasbit il-ʕiḥraam* two *rakʕa* to mark the entering of the state of being a pilgrim. ‖*fil-munasbaat* on special occasions, as in *ḥagaat ma-tiṭlaʕ-ʃ illa fil-munasbaat* things that are brought out only on special occasions. - *bil-munasba (di)* incidentally, by the way, as in *bil-munasba fakkart-i-ni b-ḥaaga* incidentally, you've reminded me of something. - *bi-munasbit ʃeeh* what (ever) for?

اتناسب *ʃitnaasib*[2↑] /vi/ to be accordant. *taṣarrufaat-ak ma-titnasib-ʃ[i] maʕa markaz-ak* your conduct is out of keeping with your position. - vn *tanaasub*; ava *mitnaasib, mutanaasib*.

تناسب *tanaasub* /n pl *-aat/ [math]* proportion. *tanaasub ʕaksi* inverse proportion.

استنسب *ʃistansib* /vt/ to select for suitability. - ava *mistansib*.

ن س ت see ن س و ت : *nasuut*

ن س ج

نسج *nasag (i)* /vt/ to weave. - vn *nasg, nasagaan, nasiig*; ava *naasig*; pva *mansuug*.

نسيج *nasiig* /coll n, pl *ʃansiga↑*/ **1** textile(s). **2** *[anat]* tissue.

نسّاج *nassaag* /n */ weaver.

منسوج *mansuug* /n pl *-aat/* textile, fabric.

انتسج *ʃitnasag* /vi/ to be woven. - iva *mitnisig*.

ن س خ

نسخ *nasax (i, a, u)* /vt/ **1** to make a copy of. *ʃis-sikirteer bi-yunsux-ha ʕala l-ʃaala k-katba* the secretary copies it on the typewriter. **2** *[leg]* to abrogate. *fii qawaniin bi-tunsux qawaniin wi-tʕaṭṭal ʃaḥkam-ha* there are laws that abrogate (other) laws and abolish their stipulations. - vn *nasx*; ava *naasix*; pva *mansuux*.

نسخ *nasx* /n/ an Arabic script (commonly used in printed books, newspapers etc.).

نسخة *nasxa* /inst n, pl *-aat/* **1** a copying. **2** an abrogation.

نسخة *nusxa* /n pl *nusax/* copy, one of the various examples of the same book or the like.

انتسخ *ʃitnasax* /vi/ passive of *nasax*. - iva *mitnisix*.

ن س ر[1]

نسر *nisr* /n pl *nusuur, nusúra/* eagle.

نسير *nisiir* /coll n/ strips or striae of fibre. *nisiir liif* palm-fibre strips. *laḥma kull-a-ha nsiir* red meat (without fat, gristle etc.). - also *nisiil*.

نسيرة *nisiira* /unit n, pl *nasaayir/* a strip or stria of fibre. - also *nisiila*.

نسّر *nassir* /vt/ **1** to pull (s.th. fibrous) into strips. *ḫ-anassir laḫm-u* I'll tear him to bits. **2** to fray (cloth). - vn *tansiir*; ava/pva *minassir*.

انتسّر *ʃitnassir* /vi/ **1** to be pulled into strips (of fibrous material). **2** to be or become frayed (of cloth). - ava/iva *mitnassir*.

ن س ر[2]

ناسور *nasuur* /n pl *nawasiir/ [path]* fistula.

ن س ر[3]

نثر *nasr↑* /n/ prose.

نثرى *nasri* /adj/ pertaining to prose.

ن س ف

نسف *nasaf (i)* /vt/ **1** to winnow. **2** to blow up with explosive. *nasafu xaṭṭ[i] sikka ḥadiid* they blew up a railway line. - vn *nasf, nasafaan*; ava *naasif*; pva *mansuuf*.

نسفة *nasfa* /pl *-aat/* instance noun of *nasf*.

نسّافة *nassaafa* /n pl *-aat/ [mil]* torpedo boat.

انتسف *ʃitnasaf* /vi/ **1** to be winnowed. **2** to be blown up (with explosive). - iva *mitnisif*.

أنسف *ʃansaf: da baṣa min ʕayyinit ʃinna ʃansafnaa-kum* this (person) is (actually) the type that would gobble you up!

ن س ق

نسق *nasaq↑* /n/ pattern, arrangement. *kull il-biyuut ʕala nasaq waaḥid* all the houses are of the same layout and design.

نسّق *nassaq↑* /vt/ **1** to arrange harmoniously. *nassaqit iz-zuhuur* she arranged the flowers. **2** to co-ordinate. *lagna li-tansiiq il-ʕamal been l-maṣaaliḥ* a committee (responsible) for co-ordinating the work among the departments. ‖*maktab tansiiq [acad]* student placement office (through which students are allocated university places). - vn *tansiiq, tansiiq*; ava *munassiq↑*; ava/pva *minassaq*; pva *munassaq*.

اتنسّق *ʃitnassaq* /vi/ **1** to be arranged harmoniously. **2** to be co-ordinated. - iva *mitnassaq*.

تناسق *tanaasaq↑* /vi/ to be in harmony, be properly co-ordinated. *ʃil-ʃawtaar mafruuḍ tatanaasaq maʕa baʕḍ* the strings are supposed to be in tune with one another. *ʃil-xadamaat laazim tatanaasaq maʕa l-ʃintaag* (public) services ought to be co-ordinated with produc-

tion. *ʕil-kalaam la yatanaasaq maʕa l-laḥn* the words don't go well with the tune. - vn *tanaasuq*; ava *mutanaasiq*.

ن س ك

نسك *nusk* /n/ ascetism.

نسكى *nuski* /adj/ ascetic, ascetical.

ناسك *naasik* /n * and pl *nussaak*/ ascetic, hermit, pious man.

ن س ك ف –

نسكفيه *niskafeeh* (also *bunn¹ niskafeeh*) <brand name> /n/ instant coffee.

ن س ل ¹

نسل *nasal (i)* **1** /vi/ to become unravelled, become frayed. *nisiila nasalit min il-ʠumaaʃ* a thread became unravelled from the cloth. *ʕit-tanya nasalit* the turn-up became frayed. **2** /vt/ **2a** to unravel, fray. **2b** to stone (dates). *ʕagwa mansuula* stoned pressed dates. - vn *nasl*; ava *naasil*; pva *mansuul*.

نسلة *nasla* /inst n, pl *-aat*/ an unravelling.

نسيل *nisiil* /coll n/ strips or striae of fibre. - also *nisiir*.

نسيلة *nisiila* /unit n, pl *nasaayil*/ a strip or stria of fibre. - also *nisiira*.

نسالة *nusaala, nisaala* /n/ lint.

اتنسل *ʕitnasal* /vi/ **1** to be or become unravelled or frayed. **2** to be stoned (of dates). - ava/iva *mitnisil*.

نسّل *nassil* **1** /vt/ to unravel, fray. **2** /vi/ to be unravelled or unravel, be or become frayed. - vn *tansiil*; ava/pva *minassil*.

اتنسّل *ʕitnassil* /vi/ to be or become unravelled or frayed. - ava/iva *mitnassil*.

ن س ل ²

نسل *nasl* **1** /vn/ giving birth, breeding. *taḫdiid in-nasl* birth control. **2** /coll n/ offspring, descendants. *nasl in-nabi* descendants of the Prophet Muhammad.

اتناسل *ʕitnaasil* /vi/ *[biol]* to reproduce. - vn *tanaasul*; ava *mitnaasil, mutanaasil*.

تناسلى *tanaasuli* /adj/ *[biol]* pertaining to the reproductive system. *ʕamraaḍ tanasuliyya* venereal diseases.

ن س م

نسمة *nisma* /n pl *nasaayim*/ breeze. *ma-fii-ʃ ḫatta nismit hawa* there is not even a breath of wind. *kaanit in-nisma ṭariyya trudd ir-rooḫ* the breeze was cool and refreshing. ‖*raaḫ wi-rigiʕ zayy in-nisma* he went and came back as fast as the wind.

نسمة *nasamaʔ* /n pl *-aat*/ inhabitant (in statistical contexts).

نسيم *nisiim, nasiim* /n/ breeze. ‖*ʃamm in-nisiim* secular spring holiday falling on the Monday after Coptic Easter and celebrated with morning picnics and the eating of traditional foods such as onions, *fisiix* and coloured eggs.

نسّم *nassim* /vt/ to wet lightly so as to soften. *nassim ir-riviif* wet the (dry) bread a little (to make it edible). **2** /vi/ to become breezy and fresh. *ʕoḍt-i bi-tnassim bil-leel* my room catches a breeze in the evening. - vn *tansiim*; ava/pva *minassim*.

اتنسّم *ʕitnassim* /vi/ to be wetted lightly and so softened. - iva *mitnassim*.

ن س ن س

نسناس *nisnaas* /n pl *nasaniis*/ monkey.

نسنس *nasnis* /vi/ to spy, snoop. *ʕig-gadaʕ da bi-ynasnis ḫawaleekum leeh* why is this guy hanging around you so inquisitively? - vn *nasnasa*; ava *minasnis*.

اتنسنس *ʕitnasnis* = *nasnis*. - ava *mitnasnis*.

ن س و

نسا، نساء *nisaʔ* /coll n/ women, womenfolk. *ʕamraaḍ nisa* gynaecology. *ʕil-ʕaar ʕan-nisa [prov]* the blame (for faults in children's upbringing) is to be laid at the feet of their mothers.

نسوان *niswaan* /coll n/ *[deris]* women, womenfolk, see further under ن س و ن

نساوين *nasawiin* /coll n/ *[deris]* women, broads.

ن س و ت see also ن ا س

ناسوت *nasuut* <Syr> /n/ *[Chr]* human nature (of Christ).

ن س و ن see also ¹ ن س و

نسون *naswin* /vt/ to make effeminate, turn into a sissy. *ʕumm-u naswinit-u* his mother made a sissy out of him. - vn *naswana*; ava/pva *minaswin*.

اتنسون *ʕitnaswin* /vi/ to become or be made effeminate or sissyish. - ava/iva *mitnaswin*.

ن س ى

نسى *nisi (a)* /vt/ to forget. *nisyit il-muftaaḫ* she forgot the key. *ma-yinsaa-ʃ il-maʕruuf ɣeer il-xasiis [prov]* only the base are ungrateful. - vn *nasw, nasayaan, nisyaan*; ava *naasi*; pva *mansi*.

النسى *ʕin-nasy* /n/ period of five or six intercalary days in early September constituting the thirteenth month of the Coptic year.

نسّاي *nassaay* /adj */ forgetful, absent-minded.
اتنسى *ʔitnasa* /vi/ to be forgotten. *layaali l-ʔuṭn matitnisii-f* the nights of the cotton (harvest) are unforgettable. - iva *mitnisi*.
نسّى *nassa* /vt/ to cause to forget. *nassaa hamm-u* it made him forget his worries. - vn *tansiyya, tansiya*; ava/pva *minassi*.
اتنسّى *ʔitnassa* /vi/ to be made to forget. - iva *mitnassi*.
اتناسى *ʔitnaasa* /vt/ **1** to pretend to forget. **2** to forget deliberately, neglect. - ava *mitnaasi*.

ن ش ا see ن ش ى : *niʃa*

ن ش ا د ر
نشادر *naʃaadir, nuʃaadir* <P *nushâdir*> /n/ **1** ammonia. **2** smelling-salts.

ن ش ء
نشأ *naʃaʔ / (a)* /vi/ **1** to grow up. *ʔil-balad illi naʃaʔt fiiha* the country in which I grew up. **2** to arise, originate. *ʔil-ḥaraayiq bi-tinʃaʔ min il-ʔihmaal* fires are caused by negligence. - vn *naʃʔa, nuʃuuʔ*; ava *naaʃiʔ*.
نشأ *naʃa, naʃaʔ (i)* /vt/ to establish, start. *ʔinta lli naʃeet iẓ-ẓulm fil-balad-di* you are the one who sowed the seeds of injustice in this town. - vn *naʃw, naʃʔ, naʃʔa*; ava *naaʃiʔ*; pva *manʃuuʔ*.
ناشئ *naaʃiʔ* /n */ youngster, member of the rising generation.
منشيّة، منشأة *manʃiyya* /n pl *manaaʃi*/ recently built village or suburb.
اتنشأ *ʔitnaʃa, ʔitnaʃaʔ* /vi/ to be built, be constructed. *ʔil-maṣnaɛ da tnaʃaʔ mil-ɛadam* this factory was built from practically nothing. - iva *mitniʃiʔ*.
أنشأ *ʔanʃaʔ* = *naʃa*. - vn *ʔinʃaaʔ*; ava *minʃiʔ, munʃiʔ*; pva *munʃaʔ*.
إنشاء؛ إنشا *ʔinʃa, ʔinʃaa* /n/ **1** *[acad]* composition (as a school subject). *ʔinʃa taḥriiri* written composition. *ʔinʃa ʃafawi* oral presentation of a theme. **2** /pl *-aat*/ structure, construction. — /adj invar/ **3** (*ʔinʃa* only) empty, shallow (of talk or writing).
إنشائى *ʔinʃaaʔi* **1** /adj */ pertaining to construction. *muhandis ʔinʃaaʔi* construction engineer. **2** /adj/ empty, shallow (of talk or writing). *kifaaya kalaam ʔinʃaaʔi* enough of this empty talk!
منشأة *munʃaʔa* /n pl *-aat*/ (commercial, professional etc.) establishment, shop, workshop etc.

ن ش ب
نشب *naʃab (i, a)* **1** /vi/ to break out. *fii xaṭar nuʃuub ḥarb been iṣ-ṣiin wi-rusya* there is a danger of an outbreak of war between China and Russia. *ʔin-naar naʃabit fi-maxzan il-xaʃab* fire started in the timber warehouse. **2** /vt/ to drive in, dig in (nails, talons etc.). *naʃab ḍawafr-u f-ɛenee* he sank his talons into his eyes. - vn *naʃabaan, nuʃuub, naʃb*; ava *naaʃib*; pva *manʃuub*.
نشّابة *naʃʃaaba* /n pl *-aat*/ rolling-pin.
اتنشب *ʔitnaʃab* /vi/ to be driven in (of nails, talons etc.). - iva *mitniʃib*.

ن ش د
نشيد *naʃiid* /n pl *ʔanaʃiid*/ song or chant (usually of a patriotic or religious nature) sung by a group. *naʃiid ḥamaasi* morale-raising song. *naʃiid iṣ-ṣabaaḥ* song sung by the assembled pupils of a school before classes start. *ʔin-naʃiid il-waṭani* (or *ʔil-qawmi*) the national anthem.
أنشد *ʔanʃad* /vt/ to chant or sing (religious verse). *ʔanʃad qaṣiida f-madḥ in-nabi* he sang an ode in praise of the Prophet Muhammad. - vn *ʔinʃaad*; ava *munʃid*.
منشد *munʃid* /n */ one who chants or sings religious songs.

ن ش د ر see ن ش ا د ر : *naʃaadir, nuʃaadir*

ن ش ر ١
نشر *naʃar (u)* /vt/ **1** to hang out (e.g., washing). *naʃarit il-liḥaaf fiṣ-ṣams* she put the quilt out in the sun. **2a** to spread abroad, propagate. *ʔid-dibbaan bi-yunʃur il-ʔamraaḍ* flies spread disease. *naʃaru ʔafkaar ʃiyuɛiyya fig-gamɛa* they spread communist ideas in the university. **2b** to publish (books). - vn *naʃr, naʃr, niʃiir*; ava *naaʃir, naaʃir*; pva *manʃuur*.
نشرة *naʃra* / /n pl *-aat*/ (news) bulletin.
ناشر *naaʃir* /n */ publisher.
منشور *manʃuur* /n pl *-aat, manaʃiir*/ **1a** small publication, leaflet, pamphlet. **1b** circular. **1c** decree. **2** *[phys]* prism.
منشر *manʃar* /n pl *manaaʃir*/ **1** place where clothes are hung to dry. **2** clothes horse.
اتنشر *ʔitnaʃar* / /vi/ **1** to be hung out (e.g., of washing). **2a** to be spread abroad, be propagated. **2b** to be published. - iva *mitniʃir*.
نشّر *naʃʃar* / /vt/ **1** to hang (several things) out. **2** to spread (things) out. - vn *tanʃiir*; ava/pva *minaʃʃar*.
اتنشّر *ʔitnaʃʃar* / /vi/ passive of *naʃʃar* /. - iva *mitnaʃʃar*.
انتشر *ʔintaʃar* /vi/ **1** to spread. *ʔil-buɛaɛ ibtadit tintiʃir fi-baṭn-u w-ḍahr-u* the spots started to spread on his stomach and back. *lamma yiftaḥ il-ḥanafiyya l-butagaaz*

ḥa-yintifir guwwa l-ḥammaam when he turns the tap, the gas will spread inside the bathroom. **2** to be widespread, be common. *ʕil-liʕba di miʃ mintiʃra f-maṣr* this game is not widely known in Egypt. - vn *ʕintiʃaar*; ava *mintiʃir, muntaʃir*.

ن ش ر [2]

نشر *naʃar[2] (u)* /vt/ to saw. - vn *naʃr, naʃr*; ava *naaʃir, naaʃir*; pva *manʃuur, manʃuur*.

نشرة *naʃra[2]* /inst n, pl *-aat*/ a sawing, a stroke of a saw.

نشارة *niʃaara, nuʃaara* /coll n/ sawdust, shavings.

منشار *munʃaar, minʃaar* /n pl *manaʃiir*/ saw. ‖*ṭaaliʕ waakil naazil waakil zayy il-munʃaar* ≈ he doesn't miss a single opportunity. - *munʃaar ʃadd[i] w-ḍaṛṭ [athl]* push and pull exercises.

انتشر *ʔitnaʃar[2]* /vi/ to be sawn. - iva *mitniʃir*.

نشّر *naʃʃar[2]* /vt/ **1** to saw into several pieces. **2** to saw a great deal, saw (a large quantity of wood). - vn *tanʃiir*; ava/pva *mitnaʃʃar*.

انتشّر *ʔitnaʃʃar[2]* /vi/ passive of *naʃʃar[2]*. - iva *mitnaʃʃar*.

ن ش ر [3]

نشر *naʃar[3] (u)* /vi/ to ache. *gism-i b-yunʃur* my body aches. - vn *naʃr, naʃr*; ava *naaʃir, naaʃir*; pva *manʃuur, manʃuur*.

ن ش ز [1]

نشزت *naʃazit (i)* /vi/ *[Isl]* to violate one's marital obligations (of a wife). *lamma s-sitt[i] tinʃiz ma-lhaa-ʃ nafaqa* when a woman violates her marital obligations she ceases to have the right to maintenance. *sitt[i] naaʃiz* (or *naʃza*) a woman in violation of her marital obligations. - vn *niʃuuz, nuʃuuz*; ava *naaʃiz*.

ن ش ز [2]

نشاز *naʃaaz* <P *nâ-sâz*> *[mus]* **1** /adj invar/ dissonant, out of tune. **2** /n/ dissonance.

نشّز *naʃʃiz* /vi/ *[mus]* to go or play out of tune. - ava *minaʃʃiz*.

ن ش ش

نش *naʃʃ (i)* /vt/ **1** to swat at, drive off (insects). *niʃʃ id-dibbaan min ʕal-ʔakl* shoo the flies off the food! ‖*yiniʃʃ[i] dibbaan)* to be or become idle as in *ʔil-maḥallaat baqit bi-tniʃʃ (id-dibbaan)* the shops have fallen idle. **2** to strike, hit. *naʃʃeet-u ʕalqa suxna* I gave him a good beating. *naʃʃuu rṣaaṣa mawwituu* they shot and killed him. - vn *naʃʃ*; ava *naaʃiʃ*; pva *manʃuuʃ*.

نشّة *naʃʃa[1]* /pl *-aat*/ instance noun of *naʃʃ*.

منشة *minaʃʃa* /n pl *-aat*/ fly whisk.

اتنشّ *ʔitnaʃʃ* /vi/ **1** to be driven off (of insects). **2** to be hit, be struck. - iva *mitnaʃʃ*.

ن ش ط

نشط *naʃiṭ* /adj/ active. *sabɣaat naʃiṭa [text]* active dyes.

أنشط *ʔanʃaṭ* /el/ more/most energetic or active.

نشاط *naʃaaṭ* /n pl *-aat, ʔanʃiṭa*/ activity. *naʃaaṭ saqaafi* cultural activity. *naʃaaṭ riyaaḍi* sporting activity.

نشيط *naʃiiṭ* /adj * and pl *nuʃaṭa*/ active, energetic.

نشّط *naʃʃaṭ* /vt/ to stimulate. *bi-ynaʃʃaṭ id-dawra d-damawiyya* it stimulates the circulation of the blood. *ʔil-ʔalɣaaz bi-tnaʃʃaṭ iz-zihn* riddles stimulate the mind. ‖*tanʃiiṭ il-mabiʕaat* sales promotion. - vn *tanʃiiṭ*; ava/pva *minaʃʃaṭ*.

منشّط *munaʃʃiṭ* /n pl *-aat*/ stimulant.

انتشّط *ʔitnaʃʃaṭ* /vi/ to be stimulated. - iva *mitnaʃʃaṭ*.

ن ش ع

نشع *naʃaʕ (a)* /vi/ to seep, filter. *bi-yimlis il-quny[a] ʕaʃaan il-mayya ma-tinʃaʕ-ʃ[i] ʕandu* he seals the sides of the canals so that the water does not seep onto his land. - vn *naʃʕ, naʃaʕaan*; ava *naaʃiʕ*.

نشّع *naʃʃaʕ* /vi/ to allow slight seepage. *ʔil-ḥeeṭa bi-tnaʃʃaʕ* the wall lets in the damp. - vn *tanʃiiʕ*; ava *minaʃʃaʕ*.

ن ش ف

نشف *niʃif (a)* /vi/ **1** to become dry. *ʔil-ɣasiil niʃif ʕal-ḥabl* the washing dried on the line. ‖*riiq-u niʃif* (1) his spittle dried, he felt thirsty. (2) he was put to great trouble. (3) he became exasperated. - *damm-i niʃif* ≈ my blood curdled (with fear). **2a** to become firm, become hard. *ḥasseet ḥaaga zayy il-ʕaḍma taḥt[i] ḍluuʕ-i w-baqit tinʃaf* I felt something like a bone beneath my ribs and it was turning hard. **2b** to become tough and hardy. *ʔig-geeʃ xallaa-ni ʔanʃaf* the army made a man of me. **3** to become lean. - vn *naʃafaan, nuʃuʃiyya*; ava *naaʃiʃ, naʃʃaan*.

نشوفيّة *nuʃuʃiyya* /n/ **1** dryness. **2a** solidity, hardness. **2b** brittleness. **3** toughness, hardiness.

ناشف *naaʃiʃ* /adj */ **1** dry. *riiq-i naaʃiʃ ḥ-amuut mil-ʕaṭaʃ* my spittle is dry; I'll die of thirst. ‖ *ʔiid-u naʃʃa* he's tight-fisted. - *dimaaɣ-u naʃʃa* (1) he's obstinate. (2) he can smoke a lot without getting befuddled (in the jargon of hashish-smokers). **2a** firm, hard. *quuṭa naʃʃa w-mistiwiyya* firm ripe tomatoes. **2b** brittle. *naḥaas naaʃiʃ* a brittle alloy of brass.

أنشف *ʔanʃaf* /el/ drier/driest, harder/hardest etc.

نشّاف *naʃʃaaf* (also *waraq naʃʃaaf*) /n/ blotting paper.
نشّافة *naʃʃaafa* /unit n, pl *-aat*/ piece of blotter, blotter.
نشّف *naʃʃif* /vt/ **1** to dry. *naʃʃift iday-ya* I dried my hands. *naʃʃif il-ħibr* blot the ink! **2a** to harden. *ʕiṣ-siqiyya bi-tnaʃʃif il-ħadiid* tempering hardens iron. **2b** to toughen up, make hardy. - vn *tanʃiif*; ava *minaʃʃif*.
اتنشّف *ʕitnaʃʃif* /vi/ **1** to be dried or dry oneself. **2a** to be hardened. **2b** to be toughened up, be made hardy. - ava/iva *mitnaʃʃif*.
استنشف *ʕistanʃif* /vt/ **1** to consider (too) hard or tough. *ʕistanʃif il-faṣulya ma-rdii-ʃ yiʃtirii-ha* he thought the beans too hard and refused to buy them. **2** to select for toughness. *ʕistanʃif-lak waaħid rayyis ʕaʃaan yiʕraf yimaʃʃi l-ʕummaal* find yourself a tough foreman so that he can control the workers. **3** to act tough. - iva *mistanʃif*.

ن ش ق
نشق *naʃaq (u)* /vt/ to inhale through the nose, sniff up. *naʃaqit mayya ktiir laakin in-naziif barḍu ma-wqif-ʃ* she sniffed a lot of water through her nose but the bleeding wouldn't stop. - vn *naʃq, naʃaqaan*; ava *naaʃiq*.
نشوق *niʃuuq, nuʃuuq* /n/ snuff.
نشّق *naʃʃaq* /vt/ to make (s.o.) sniff. - vn *tanʃiiq*; ava/pva *minaʃʃaq*.
تنشيقة *tanʃiiqa* /n pl *-aat, tanaʃiiq*/ **1** an amount (of, e.g., snuff) sufficient for a single sniff. **2** a pinch (of s.th. powdery). *tanʃiiqit misk* a pinch of musk.
اتنشّق *ʕitnaʃʃaq* /vi/ **1** to be made to sniff. **2** to take snuff. - ava/iva *mitnaʃʃaq*.
استنشق *ʕistanʃaq* **1** /vt/ to inhale through the nose, sniff up. **2** /vi/ to clean the nose three times by sniffing water into it and then expelling the water (as a part of the ablutions obligatory before the performance of any of the Muslim ritual prayers). - vn *ʕistinʃaaq*; ava *mistanʃaq*.

ن ش ل
نشل *naʃal (i)* /vt/ **1** to scoop (out of liquid). *naʃal il-laḥma miʃ-ʃurba bil-maṣfa* he scooped the meat out of the soup with a straining spoon. *naʃalu talatiin gussa min il-ʕutubiis il-ɣarqaan* they fished thirty bodies out of the submerged bus. **2a** to pick the pocket of. *naʃal-ni fiz-zaḥma* he picked my pocket in the crowd. **2b** to pick (s.th.) from a pocket. *naʃal maḥfaẓt-i* he picked my wallet from my pocket. - vn *naʃl, naʃalaan*; ava *naaʃil*; ava *manʃuul*.
نشّال *naʃʃaal* /n */ pickpocket.
اتنشل *ʕitnaʃal* /vi/ **1** to be scooped or lifted out of liquid. **2a** to have one's pocket picked. **2b** to be picked from a pocket. **3** to feel relieved, feel uplifted. - ava/iva *mitniʃil*.
انتشل *ʕintaʃal* **1** /vt/ to lift, raise up, retrieve (out of s.th.) *ʕintaʃalu l-markib il-ɣarqaana bil-winʃ* they raised the sunken boat using a crane. **2** /vi/ to be uplifted, be relieved. *saaʕit ma ʃuft id-duktoor gaay intaʃalt* when I saw the doctor coming I felt unburdened. - vn *ʕintiʃaal*.

ن ش ن [1]
نشان، نيشان *naʃaan, niʃaan* <T *nişan*> /n/ **1** aim, aiming. *naʃaan-ak maẓbuuṭ* your aim is good. **2** sight (on a firearm). *ʕin-naʃaan bitaaʕ il-bunduqiyya maẓbuuṭ* the sight of the rifle is accurate. **3** target-shooting game. — /pl *nayaʃiin*/ **4** medal, decoration. - *ʕin-naʃaan* /coll n/ **5** the small gifts (usually of food) given to a bride by friends, neighbours etc.
نشانجي *naʃangi, niʃangi* /n pl *-yya*/ **1** marksman, sharpshooter. **2** good marksman, good shot.
نشّن *naʃʃin* **1** /vi/ to take aim. *naʃʃin ʕag-goon* he aimed at the goal. **2** /vt/ to aim (s.th.). *naʃʃin il-bunduqiyya kwayyis* aim the rifle properly! - vn *tanʃiin*; ava *minaʃʃin*.
اتنشّن *ʕitnaʃʃin* /vi/ **1** (impersonal) passive of *naʃʃin* 1. *mumkin yitnaʃʃin ʕalee min hina* it can be aimed at from here. **2** to be aimed. - iva *mitnaʃʃin*.

ن ش ن [2] see ق ش ا ن : *niʃaani*

ن ش و
نشوة *naʃwa* /n/ elation, ecstacy.
انتشى *ʕintaʃa* /vi/ to feel elated. *ʃiribt il-biira wi-ntaʃeet* I drank the beer and felt on top of the world. - ava *mintiʃi*.

ن ش ى [1]
نشا، نشاء *niʃa* /n/ starch.
نشوى *niʃawi* /adj/ starchy.
نشويّات *niʃawiyyaat*↑ /n pl/ carbohydrates.
نشّى *naʃʃa* [2] /vt/ to starch. *naʃʃi l-yaqaat* starch the collars! - vn *tanʃiyya*; ava/pva *minaʃʃi*.
منشّى *minaʃʃi* /adj */ **1** elegantly dressed, spruce. **2** *[slang]* starchy, stuffy, prim.
اتنشّى *ʕitnaʃʃa* /vi/ to be starched. - iva *mitnaʃʃi*.
متنشّى *mitnaʃʃi* = *minaʃʃi* 1.

ن ش ى [2] see ن ش ء : *manʃiyya*

ن ص ب [1]

نصب *naṣab (u)* **1** /vt/ to set up, erect, prepare. *naṣabna l-xeema* we pitched the tent. *naṣabna-lhum faxx* (1) we played a trick on them. (2) we laid a trap for them. ‖*naṣab ɋaɛda* to hold a gathering. **2** /vi/ to practise deception or trickery. *ʕid-daggaliin bi-yintihzu l-furṣa di w-yunṣubu ɛala n-naas* the con men seize this opportunity and take people in. - vn *naṣb*; ava *naaṣib*; pva *manṣuub*.

نصب *naṣb, nuṣb[1]* /n/ erection. *naṣb[i] tizkaari* monument.

نصبة *naṣba* /n pl *-aat*/ **1** /inst n/ **1a** a setting-up, a standing. *manṣuub naṣbit ig-gabal* standing (as firm) as the hills. **1b** a tricking, a swindling. **2** vendor's stall. **3** *[Isl]* stone post erected over a grave to indicate the position of the head and sometimes inscribed with the name of the deceased and verses from the Koran.

نصب *nuṣb[2]↑: nuṣb[i] ɛeen(ee)* in front of, before the eye(s) of.

أنصب *ʔanṣab* /el/ craftier/craftiest.

نصاب *niṣaab↑* /n/ quota. *kull[i] mudarris luu niṣaab* each teacher has a prescribed teaching load.

نصيب *naṣiib* /n/ **1** share, portion. *kull[i] waaḥid ḥa-yaaxud naṣiib-u mil-ʔarbaaḥ* everyone will get his share of the profits. ‖ *ʔeeh naṣiib-ak min ism-ak* ≈ how well-matched are you and your name? (thus a girl named *ʔamaal* may be asked this in the sense 'Are you as optimistic as your name (lit: hopes) implies?'). **2** lot, destiny. *kull[i] ʃeeʔ ɋisma w-naṣiib* everything is a matter of fate. *ma-ḥadd[i]-ʃ yaaxud ʔilla naṣiib-u* no one gets more than his fate ordains. *ʔin ʃa-llaʃ-ʃaɋɋa tkuun min naṣiib-ak* I hope you succeed in getting the flat. ‖ *ʔiddaa naṣiib-u* or *ʔiddaa lli fii ʔin-naṣiib* he gave him what he could afford at the time, he gave him a modest tip. see further under ى ن ص ى ب

نصّاب *naṣṣaab* /n */ confidence trickster, swindler.

منصب *manṣab, manṣib* /n pl *manaaṣib*/ office, position. ‖*miʃ bitaaɛ manaaṣib* not one who lusts after high positions.

منصاب *minṣaab* or *munṣaab* /n pl *manaṣiib*/ handle of a tool.

انتصب *ʔitnaṣab* /vi/ **1** to be set up, be erected. **2** (impersonal) passive of *naṣab* 2. *miʃ ʔana lli yitniṣib ɛalayya* I am not one to be taken in. **3** to start, get under way (of a social gathering, get-together etc.). - ava/iva *mitniṣib*.

نصّب *naṣṣab* /vt/ to appoint (to a job or position). *naṣṣabt-ak rayyis hina* I (hereby) make you boss here. - vn *tanṣiib*; ava/pva *minaṣṣab*.

انتصّب *ʔitnaṣṣab* /vi/ to be appointed (to a job or position). - iva *mitnaṣṣab*.

انتصب *ʔintaṣab* /vi/ **1a** to have an erection. **1b** to be capable of having an erection. **2** to become erect. - vn *ʔintiṣaab*; ava/iva *mitniṣib*.

ن ص ب [2] see [1] ص و ب : *niṣiiba*

ن ص ح

نصح *naṣaḥ (a)* **1** /vt/ to advise. *naṣaḥt-u bass[i] ma-smiɋ-ʃ ik-kalaam* I advised him but he paid no heed. **2** /vi/ to become alert, give one's attention. *ʔinṣaḥ lil-ɋiyaal* keep an eye on the children. - vn *nuṣḥ, naṣaḥaan, naṣaaḥa*; ava *naaṣiḥ*; pva *manṣuuḥ*.

نصاحة *naṣaaḥa* /n/ sharpness, intelligence, brightness. *ʔil-wad-da ʔaaxir naṣaaḥa* this kid's really smart.

ناصح *naaṣiḥ* /adj * and pl *nuṣaḥa*/ clever, intelligent, bright. ‖*geet ya naaṣiḥ [deris]* back already, you clever dick!

أنصح *ʔanṣaḥ* /el/ more/most clever, intelligent or bright.

نصيحة *naṣiiḥa* /n pl *naṣaayiḥ*/ piece of advice.

انتصح *ʔitnaṣaḥ* /vi/ to be advised. - iva *mitniṣiḥ*.

نصّح *naṣṣaḥ* /vt/ to enlighten, make aware, instruct. *naṣṣaḥ ibn-ak ʃiwayya w-xallii yaaxud baal-u* put your son wise to a few things and make him watch his step! - vn *tanṣiiḥ*; ava/pva *minaṣṣaḥ*.

انتصّح *ʔitnaṣṣaḥ* /vi/ **1** to be enlightened, be made aware, be instructed. **2** to become alert. - ava/iva *mitnaṣṣaḥ*.

استنصح *ʔistanṣaḥ* **1** /vt/ to select for intelligence. **2↓** /vi/ to be alert, be sharp. - ava *mistanṣaḥ*.

ن ص ر [1]

نصر *naṣar (u)* /vt/ **1** to side with, take the part of. *ʔabuu-ya tamalli b-yunṣur ʔaxuu-ya ɛalayya* my father always takes my brother's part against me. **2** to cause to be successful. *rabb-i-na naṣar-ni fil-ɋaḍiyya* God gave me victory in the case. *ʔallaah yunṣur-ak ɛala lli yɛadii-k* God grant you victory over your enemies! ‖*yunṣur diin-ak* ≈ well done! - vn *naṣr*; ava *naaṣir*; pva *manṣuur*.

نصر *naṣr* /n/ **1** victory. **2** good fortune, success. *daɛɛet-lu bin-naṣr* I wished him success.

نصرة *naṣra* /inst n, pl *-aat*/ a granting of victory.

ناصر *naaṣir* /n/ Granter of victory (epithet of God).

ناصرى *naaṣiri* **1** /adj/ Nasserite. **2** /n */ a Nasserite.

الناصريّة *ʔin-naaṣiriyya* /n/ **1** quarter in Cairo between the Sayyida Zaynab and Abdin districts. **2** Nasserism.

نصير *naṣiir* /n pl *nuṣara*/ helper, protector, supporter. *rabb-i-na dayman naṣiir il-mazlumiin* God always helps the oppressed.

منصر *manṣar* /n/ *[obsol]* gang of robbers. *feex manṣar* or *raas manṣar* (1) leader of a criminal gang, robber baron. (2) epithet for a clever cunning person, clever devil.

ناصر *naaṣar↑* /vt/ to support, side with, help. -vn *minaṣra*; ava *minaaṣir*.

اتناصر *ʔitnaaṣir* /vi/ to be supported, be helped, be sided with. -iva *mitnaaṣir*.

انتصر *ʔintaṣar* /vi/ to triumph, win. -vn *ʔintiṣaar*; ava *mintiṣir*.

انتصار *ʔintiṣaar* /n pl *-aat*/ victory.

ن ص ر [2]

نصراني *nuṣraani, naṣraani↑* /n * and pl *naṣaara*/ Christian. ‖*gawaazit naṣaara* (a marriage of Christians, i.e. one not easily dissolved by divorce) an unbreakable bond.

نصّر *naṣṣar* /vt/ **1** to convert to Christianity, Christianize. **2**↓ to baptize. -vn *tanṣiir*; ava *minaṣṣar*.

التناصير *ʔit-tanaṣiir* (also *ḫadd it-tanaṣiir*) /n/ *[Chr]* Baptism Sunday (the Sunday before Palm Sunday).

اتنصّر *ʔitnaṣṣar* /vi/ **1** to convert or be converted to Christianity, become a Christian. **2**↓ to be baptized. -ava/iva *mitnaṣṣar*.

استنصر *ʔistanṣar* /vi/ to become a Christian, convert to Christianity. -ava *mistanṣar*.

ن ص ص [1]

نصّ *naṣṣ[1]↑ (u)* /vi/ to make a stipulation (or stipulations). *ʔil-qanuun bi-ynuṣṣ[a] ɛala* ... the law stipulates .... -vn *naṣṣ*; ava *naaṣiṣ*; pva *manṣuuṣ*.

نصّ *naṣṣ[2]* /n pl *nuṣuuṣ*/ **1** stipulation, clause (e.g., of a law). **2** text, script. ‖*bin-naṣṣ* in precise terms, exactly.

منصّة *manaṣṣa* /n pl *-aat*/ dais, podium. *manaṣṣit il-quḍaah* the judges' bench.

اتنصّ *ʔitnaṣṣ* /vi/ (impersonal) passive of *naṣṣ[1]*. *ʔil-kalam-da ma-tnaṣṣ[i]-ʃ ɛalee fil-ɛaḳd* this was not stipulated in the contract. -iva *mitnaṣṣ*.

ن ص ص [2]

نصّ *nuṣṣ* /n pl *niṣaaṣ, ʔanṣaaṣ*/ **1** half. *nuṣṣ[i] saaɛa* half an hour. *gineeh wi-nuṣṣ* a pound and a half. *nuṣṣ[i] kariim* semi-precious. *nuṣṣ[i] ʔutumatiik* semi-automatic. ‖*xasseet in-nuṣṣ* I lost a great deal of weight. -*nuṣṣ[i] nuṣṣ* half and half, so-so, as in *ʔil-masraḥiyya kaanit nuṣṣ[i] nuṣṣ* the play was only so-so. -*(bi-)nuṣṣ[i] kumm* short-sleeved. -*nuṣṣ[i] ɛumr* used, not new, second-hand, as in *ɛarabiyyaat nuṣṣ[i] ɛumr* used cars, *raagil* (or *mara) nuṣṣ[i] ɛumr* a man (or a woman) without much life left in him (or her). -*faat-ak nuṣṣ[i] ɛumr-ak* you missed something great. -*kammil nuṣṣ[i] diin-u* to get married (of a man). -*raagil fibr[i] w-nuṣṣ* shorty (of a man). -*ɛala waḥda w-nuṣṣ* see *waaḥid*. -... *wi-nuṣṣ* certainly, definitely, as in *ḫa-tquum bil-ʔagaaza*. - *ḫ-aquum biiha w-nuṣṣ* 'Are you going to take your holiday?' 'I certainly am!' *fii ʔalam fi-kitf-ak*. - *fii ʔalam wi-nuṣṣ* 'Do you have a pain in your shoulder?' 'Yes, a dreadful pain!' -*ʔin-nuṣṣ[i] bin-nuṣṣ* in half, in two, as in *nitqaasim il-filuus in-nuṣṣ[i] bin-nuṣṣ* we split the money two ways. -*nuṣṣ[i] ʔikliil [Chr]* formal betrothal service. **2** halfway point, middle. *nuṣṣ il-leel* midnight. *fi-nuṣṣ il-ʔusbuuɛ* in the middle of the week. *fi-nuṣṣ iṣ-ṣiniyya* in the middle of the tray. ‖*(leelit) nuṣṣ[i] ʃaɛbaan* the night of the fifteenth day of the month of Shaban, on which religious Muslims commemorate the changing of the direction of the *ḳibla* from Jerusalem to Mecca. -*ʃams-ak wi-nuṣṣ il-leel* openly, for all to see, as in *ʔana ma-b-axabbii-ʃ ḫaaga ɛan ḫadd[i] minkum ʃams-ak wi-nuṣṣ il-leel* I don't hide a thing from any of you, everything is on the table. **3** (also *nuṣṣ[i] faḍḍa) [obsol]* one para, a coin equal to one fortieth of a piastre. ‖*liɛbit in-nuṣṣ* a simple gambling game turning on the toss of a coin or substitute. **4** half-piece at the edge of a section in tent appliqué designs (see Pl.H, 2).

نصّص *naṣṣaṣ* /vt/ **1** to halve, take (away) the half. *yinaṣṣaṣ is-sigaara wi-ysib-ha* he half-smokes a cigarette and leaves it. **2** to fill half-way. *laɛeet-u naṣṣaṣ iṣ-ṣahriig* I found that he had half-filled the water tank. -vn *tanṣiiṣ*; ava/pva *minaṣṣaṣ*.

اتنصّص *ʔitnaṣṣaṣ* /vi/ passive of *naṣṣaṣ*. -iva *mitnaṣṣaṣ*.

ن ص ع

نصع *naṣaɛ (a)* /vi/ to become bright. *wiff-a-ha naṣaɛ* her face lit up. -vn *naṣaɛaan, nuṣuɛiyya*; ava *naaṣiɛ*.

ناصع *naaṣiɛ* /adj/ bright. *naaṣiɛ il-bayaaḍ* gleamingly white.

أنصع *ʔanṣaɛ* /el/ brighter/brightest.

ن ص ف [1]

نصف *niṣf↑* /n pl *ʔanṣaaf*/ half. ‖*ʔanṣaaf ḥuluul* compromises, middle-of-the-way solutions.

نصفي *niṣfi↑* /adj/ pertaining to or affecting one half, partial. *ʃalal niṣfi* hemiplegia.

مناصفة *munaṣfa, minaṣfa* /adv/ in half, in two equal parts. *wazzaɛu l-maksab munaṣfa benhum* they split the profit half and half between themselves.

ن ص ف [2]

نصف *naṣaf (i)* /vt/ **1** to relieve of injustice. *ma-ḫadd[i]-ʃ naṣaf-u ʔilla l-mudiir ig-gidiid* no one gave him his full

rights except the new director. **2↓** to treat nicely. ‖*ma-b-tinṣif-ʃ*^{i} *nafs-a-ha* (she doesn't do herself justice) ≈ she's always making trouble. -*rabb-i-na yinṣif-ak wi-tirgaɛ badri* I hope you will come back early this time (without your usual dilly-dallying). - vn *naṣafaan, naṣf*; ava *naaṣif*; pva *manṣuuf*.

نصفة *naṣafa: yaɛni huwwa (hiyya, humma) lli naṣafa* is he (she, they etc.) any better?

أنصف ʔanṣaf^{1} /el/ more/most just or fair.

اتنصف ʔitnaṣaf /vi/ passive of *naṣaf*. - iva *mitniṣif*.

أنصف ʔanṣaf^{2}↑ = *naṣaf* 1. *ʔil-ʔinṣaaf [admin]* general salary adjustment. - vn *ʔinṣaaf*; ava *munṣif*.

انتصف ʔintaṣaf /vi/ to do the right thing (as an exception). *ʔintaṣafit wi-ɣasalit wiff-a-ha* for once she's washed her face! - ava *mintiṣif*.

ن ص ل

نصل *naṣal (u)* **1** /vt/ to throw or hurl to the ground. *ʃaal-u w-naṣal-u fil-ʔarḍ*^{i} *kaan ḥa-ymawwit-u* he picked him up and threw him on the ground almost killing him. **2** /vi/ to recuperate, regain health. *ʔil-waad naṣal taani baɛd il-ɛaya* the kid has recuperated after his sickness. - vn *naṣl, naṣalaan*; ava *naaṣil*; pva *manṣuul*.

نصلة *naṣla* /pl *-aat*/ instance noun of *naṣl*.

اتنصل ʔitnaṣal /vi/ to be thrown or hurled to the ground. - iva *mitniṣil*.

نصّل *naṣṣal* /vt/ to smash, wreck, destroy. *ɛaɛad yiḍrab il-ɛaṣaaya fil-ḥeeṭ li-ɣayit ma naṣṣal-ha xaaliṣ* he kept on banging the stick against the wall until he smashed it completely. - vn *tanṣiil*; ava/pva *minaṣṣal*.

اتنصّل ʔitnaṣṣal /vi/ **1** to be smashed, be wrecked, be destroyed. **2** to exculpate oneself, deny responsibility. *ʔitnaṣṣal mil-ɣalaṭ illi ɛamal-u* he wriggled out of taking responsibility for his mistake. - ava/iva *mitnaṣṣal*.

ن ص ى

ناصية *naṣya* /n pl *nawaaṣi*/ corner (of a building or street). ‖ *ʃaḍdaam wi-ʃaɛtaab wi-nawaaṣi* see *ḍadam*.

ن ض ج

نضج *naḍag*↑ *(u)* /vi/ to mature (of, e.g., a personality). *ʃaxṣiyya naḍga* a mature personality. *fikra naḍga* a mature idea. - vn *nuḍg, nuḍuug, naḍagaan*; ava *naaḍig*.

أنضج ʔanḍag^{1} /el/ more/most mature.

أنضج ʔanḍag^{2}↑ /vt/ to bring to maturity. *ʔis-siniin ʔanḍagit-u* time gave him maturity. - vn *ʔinḍaag*; ava *munḍig*.

استنضج ʔistanḍag /vt/ to select for maturity. - ava *mistanḍag*.

ن ض ح

نضح *naḍaḥ (a)* /vi/ to ooze, seep. *ʔil-ɛaraq naḍaḥ ɛag-gallabiyya* the sweat seeped through onto the galabiya. *ʔil-ʔalwaan bi-tinḍaḥ ɛala baɛḍ-a-ha* the colours run together. - vn *naḍḥ, naḍaḥaan, nuḍuuḥ*; ava *naaḍiḥ*.

ن ض ر see ن ظ ر: *naḍar, naḍḍaara, naḍḍaraati, manḍara*

ن ض ف

نضف، نظف *niḍif* or *nuḍuf (a)* /vi/ **1** to become clean. *ʔidɛak-ha lamma tinḍaf* scrub them till they're clean! ‖*geeb-i niḍif* ≈ I'm flat broke. -*ḥisaab-ak niḍif* your account is settled. **2** to improve in character, appearance etc. *gallidt ik-kitaab wi-ʃakl-u niḍif* I had the book bound and it looked better. *raaɛa rabb-i-na w-niḍif* he saw the error of his ways and went straight. *ʔil-ɛarabiyya niḍfit ɋawi min yoom ma l-buǰehaat itɣayyarit* the car's been much better since the sparking plugs were changed. *ʔir-radyu ṣoot-u niḍif* the radio's sound quality improved. - vn *naḍaafa*; ava *naḍfaan*.

نضافة، نظافة *naḍaafa, naẓaafa* /n/ **1** cleanliness. *ʔin-naḍaafa min il-ʔimaan [prov]* ≈ cleanliness is next to godliness. **2** *ʔin-naḍaafa* (also *ḍariibit in-naḍaafa*) the tax levied on householders to cover street-cleaning etc.

نضيف، نظيف *niḍiif* /adj pl *nuḍaaf*/ **1a** clean. *fil-ɛiid bi-yilbisu hduum gidiida walla nḍiifa* on the day of the feast they put on new or clean clothes. ‖*geeb-i nḍiif* my pockets are cleaned out, I'm broke. **1b** free of impurities. *law kaanit in-naḥaasa mif niḍiifa ma-tiɋbal-ʃ il-liḥaam* if the piece of copper isn't pure it won't take soldering. *ɟuul ma z-zeet niḍiif il-babuur yitann-u kwayyis* so long as the oil is clean the stove continues to work well. **2a** decent in appearance, neat and proper. *bi-yiɛmil it-tafaṭiib ɛafaan yibɋa ʃakl-a-ha nḍiif* he adds the finishing touches to it so that it looks properly done. **2b** (morally) decent, upright, honest. *raagil niḍiif ma-huwwaa-ʃ bitaaɛ ʔakl* an honest man, not the sort to take bribes. *ʔiḥna b-nixdim ɛaʃaan nifḍal ɛayʃiin nuḍaaf bi-ʃaraf-na* we work as servants so that we may continue to live a decent and honourable life. **3** of high standard, excellent. *ɟuvl*^{i} *nḍiif* good work. *xaṭṭaaṭ niḍiif* an excellent calligrapher. *liɛib liɛba nḍiifa* he played a great shot.

أنضف، أنظف ʔanḍaf /el/ more/most clean, neat, decent etc.

نضّف، نظّف *naḍḍaf* /vt/ **1** to clean, clean up, tidy up. *naḍḍaft*^{i} *snaan-ak* have you cleaned your teeth? *ʔil-ʃarrafiin illi bi-ynaḍḍafu l-makaatib* the janitors who

clean the offices. *bi-nnaḍḍaf il-ʃarḍ' bif-ʃooka* we clear the ground with the rake. **2** to clean out (s.o.) of money. *ʃin-naffaal naḍḍaf-ni* the pickpocket cleaned me out. **3** to clear away, get rid of. *naḍḍaf il-waraq illi ɛal-maktab* clear off the paper that's on the desk. *ɛafaan niḥfi btingaan laazim ninaḍḍaf ɡalb-u* in order to stuff eggplants we must (first) clean out the insides. **4** to improve the appearance or character of, give finish or polish to. **5** *[carp, metal]* to smooth, plane. *ʃil-xaʃab il-xaʃiim laazim ninaḍḍaf-u l-ʃawwil* we have to smooth the rough wood first. **6** *[needlew]* to neaten. *ʃiriit tanḍiif* seam binding tape. **7** to depilate. *naḍḍafit riglee-ha* she removed the hair from her legs. - vn *tanḍiif*; ava/pva *minaḍḍaf*.

منظّف، منضّف *munaẓẓif* /n pl *-aat*/ cleanser.

اتنظّف، اتنضّف *ʃitnaḍḍaf* /vi/ passive of *naḍḍaf*. **2** to become clean. - ava/iva *mitnaḍḍaf*.

استنظف، استنضف *ʃistanḍaf* /vt/ **1** to consider *niḍiif*. **2** to select for cleanliness. *ʃistanḍaf ḥitta nuqɛud fiiha* choose a clean place for us to sit in. — /vi/ **3** to behave in a straightforward fashion. *ma tistanḍaf baqa ya ɛamm' w-balaaf fuxl in-naṣb' da* play it straight, man, and let's have none of this trickery. - vn *ʃistinḍaaf*; ava/pva *mistanḍaf*.

ن ط ح

نطح *naṭaḥ (a)* /vt/ **1** to butt, toss (with the horns). ‖*gineeh yinṭaḥ gineeh* ≈ honest-to-goodness pounds, real one-hundred-piastre-apiece pounds, as in *dafaɛt' xamsa gneeh gineeh yinṭaḥ gineeh* I paid a whole five solid pounds. - *ʃawwil ma yiftaḥ yinṭaḥ* as soon as he takes a course (of action) he goes (too) far. **2** to reply to rudely, treat roughly. - vn *naṭḥ, naṭaḥaan*; ava *naaṭiḥ*; pva *manṭuuḥ*.

نطحة *naṭḥa* /inst n, pl *-aat*/ a butt.

ناطحة *naaṭiḥa* /n pl *-aat*/: *naaṭiḥat saḥaab* skyscraper.

نطّاح *naṭṭaaḥ* /adj/ given to butting (of sheep etc.). *ʃis-saḥḥ id-daḥḥ ya xaruuf naṭṭaaḥ* children's chant urging a ram to butt.

انتطح *ʃitnaṭaḥ* /vi/ to be butted. - iva *mitniṭiḥ*.

ناطح *naaṭiḥ* /vt/ to butt, have a butting match with. *ʃik-kabʃeen bi-ynaṭḥu baɛḍ* the two rams are butting each other. - vn *niṭaaḥ, minaṭḥa*; ava *minaaṭiḥ*.

اتناطح *ʃitnaaṭiḥ* /vi/ **1** to butt one another, have a butting match with one another. **2** to be butted at. - ava/iva *mitnaaṭiḥ*.

ن ط ر ¹

نطر *naṭar (u)* /vi/ to rain. *ʃid-dinya naṭarit zalaṭ* (1) it hailed. (2) it rained cats and dogs.

نطرة *naṭara* /n/ rain. - also *maṭara*.

نطّر *naṭṭar* /vi/ to rain. (*ʃid-dinya* or *ʃin-naṭara) naṭṭarit* it rained. (*ʃid-dinya* or *ʃin-naṭara) bi-tnaṭṭar* it is raining. - also *maṭṭar*. - vn *tanṭiir*; ava *minaṭṭar*.

اتنطّر *ʃitnaṭṭar* /vi/ (impersonal) passive of *naṭṭar*. *ʃilaah-i yitnaṭṭar ɛaleehum zift' w-ɡaṭraan [women in trad soc]* ≈ may dirt and filth be rained down on them! - iva *mitnaṭṭar*.

ن ط ر ² see ن ط و ر ²: *naṭuur*

ن ط ر و ن

نطرون *naṭruun* /n/ natron. ‖*waadi n-naṭruun* /prop n/ Wadi Natrun, a valley in the Western Desert on the road between Cairo and Alexandria, celebrated for its ancient hermitages and monasteries.

ن ط ط

نطّ *naṭṭ (u)* /vi/ **1** to jump, make a jump. *naṭṭeet mil-ɡaṭr* I jumped from the train. ‖*kull' ʃwayya tnuṭṭ-i-lna hina fil-beet* she's always barging in on us at home. - *ʃif-farr' ḥa-ynuṭṭ' min ɛeen-u* ≈ he is looking daggers, he is glaring. - *ʃiftakarna l-guṭṭ' ga ynuṭṭ* ≈ talk of the Devil! - *naṭṭ' fiiha* to spoil things by interfering, as in *ma daam ʃinta naṭṭeet fiiha tibqa baaziṭ* as long as you've interfered, all is lost. **2** to proceed out of sequence, skip. *ʃiẓ-ẓaahir ʃinnu bi-ynuṭṭ - gaayiz bi-yaaxud nimra min fooq w-nimra min taḥt* it appears he's skipping - probably taking one number from the top, then one from the bottom. *ʃil-ʃibra naṭṭit* the needle (of the record-player) jumped. — /vt/ **3** to jump (a distance). *ʃil-masafaat illi naṭṭenaa-ha* the distances we jumped. ‖*naṭṭ il-ḥabl* (the game of) skipping. - *naṭṭ il-ḥawaagiz [athl]* hurdling. **4** to skip, leave out. *saɛaat il-mumassiliin bi-ynuṭṭu ṣafḥa ʃaw bi-ynuṭṭu saṭreen talaata* sometimes the actors skip a page or jump two or three lines. **5** to scoop up (a hockey ball) with the stick before striking. - vn *naṭṭ, naṭaṭaan*; ava *naaṭiṭ*; pva *manṭuuṭ*.

¶ *naṭṭ[a] ɛala [coarse]* to copulate with, ride (a woman).

نطّة *naṭṭa* /inst n, pl *-aat*/ **1** a jump. **2** *ʃin-naṭṭa* a children's game in which the player jumps or hops from one part of a square marked on the ground to another, his movements being dictated by an accompanying chant.

نطّاط *naṭṭaaṭ* /coll n/ young locust(s). ‖*ziɛeeṭ wi-mɛeeṭ wi-naṭṭaaṭ il-ḥeeṭ* see *ziɛeeṭ*.

منطّ *manaṭṭ* /n pl *-aat*/ diving-board.

منطّة *manaṭṭa* /n pl *-aat*/ a wall low enough to be scaled. ‖*huwwa beet-i baqa manaṭṭa li-lli yiswa wi-lli ma-*

yiswaa-ʃ (have things gone so far that) all and sundry may just barge into my house as they please?
اتنطّ *ʔitnaṭṭ* /vi/ **1** passive of *naṭṭ* 3, 4 and 5. **2** (impersonal) passive of *naṭṭ* 1 and 2. - iva *mitnaṭṭ*.
نطّط *naṭṭaṭ* /vt/ **1** to cause to jump. *ʔil-ʁuradaati bi-ynaṭṭaṭ il-ʁird^{i} fif-ʃaariɛ* the monkey-man makes his monkey jump up and down in the street. **2** to cause to bounce. *yifʁal yinaṭṭaṭ ik-koora l-ʏaayit ma yiddii-ha li-zmiil-u* he goes on dribbling the ball till he passes it to his team-mate. **3** to cause to proceed out of sequence, cause to skip. *laʁuu ʃaaṭir naṭṭaṭuu sana* they found he was bright (so) they had him skip a year. - vn *tanṭiiṭ*; ava *minaṭṭaṭ*.
¶ *naṭṭaṭ ɛala* to mate (a male animal) with (a female).
انتطّط *ʔitnaṭṭaṭ* /vi/ **1** passive of *naṭṭaṭ*. **2** to jump about, jump up and down. - ava/iva *mitnaṭṭaṭ*.

ن ط ع

نطع *naṭɛ* /n pl *ʔanṭaaɛ*/ uncouth person, lout. *ʔanṭaaɛ il-balad* the rabble of the town.
نطاعة *naṭaaɛa* /n/ uncouthness, loutishness.
استنطع *ʔistanṭaɛ* /vt/ **1** to select for uncouthness. **2** to reject for uncouthness. — /vi/ **3** to behave uncouthly, behave like a lout. - vn *ʔistinṭaaɛ*; ava *mistanṭaɛ*.

ن ط ف

نطفة *nuṭfa* /n pl *-aat, nuṭaf*/ **1** drop. **2** sperm. *ʔabuu-ha maat wi-hiyya lissa nuṭfa f-baṭn^{i} ʔumm-a-ha* her father died when she was still unborn.

ن ط ق !

نطق *naṭaq (a)* /vi/ **1** to speak, give voice. *ma-naṭaqt^{i}-ʃ bi-kilma* I didn't utter a word. ‖*naṭaq bil-ḥukm [leg]* to give a ruling, as in *ʔil-ʁaḍiyya tʔaggilit lin-nuṭq^{i} bil-ḥukm* the case has been adjourned till the verdict is pronounced. - *ʔinṭaq* a brusque and offensive command to speak ≈ open your mouth! - *da rasm^{i} ḥa-yinṭaq* the picture's so good it almost seems to speak! - *xalla s-siggaada tinṭaq* ≈ he fixed the carpet like a dream! - *ʔil-xaaliʁ in-naaṭiʁ* ≈ the spit and image, as in *da l-xaaliʁ in-naaṭiʁ ʔaxuu* he's the spit and image of his brother. **2** to sprout, spring up. *ʔis-simbila naṭaʁit* the wheat ear burgeoned. **3** to toss or throw off. *naṭaʁt-u min ɛala ʁahr-i* I tossed him off my back. — /vt/ **4**↑ to pronounce. *bi-yinṭaq ʔingiliizi kwayyis* he pronounces English well. **5** to put forth (leaves, flowers etc., of a plant). *ʔil-ʁamḥ^{i} b-yinṭaq is-simbila* the wheat puts forth its ears. - vn *naṭq, nuṭq*; ava *naaṭiʁ*; pva *manṭuuʁ*.
نطق *nuṭq* /n/ **1** pronunciation. *ʔik-kilmaa-di nuṭq-a-ha ʔizzaay* how is this word pronounced? **2** enunciation. *nuṭq-u miʃ kiwayyis* he does not enunciate well.
منطق *manṭaʁ: ma-ḥaṭṭ^{i}-ʃ manṭaʁ* (he dropped to the ground, he fell dead etc.) without uttering a sound.
منطق *manṭiʁ, manṭiʁ* /n/ logic.
منطقي *manṭiʁi, manṭiʁi* /adj */ logical.
انتطق *ʔitnaṭaʁ* /vi/ passive of *naṭaʁ*. - iva *mitniṭiʁ*.
نطّق *naṭṭaʁ* /vt/ **1a** to cause to speak, cause to give voice. *maa-lu ʁaaɛid saakit kida - ma-ḥadd^{i}-ʃ ɛaarif yinaṭṭaʁ-u* why's he sitting there so quiet? can't anyone get a word out of him? **1b** to cause to pronounce. *naṭṭaʁit-hum kiwayyis* she taught them good pronouciation. **2** to set off to advantage. *ʔil-karafatta z-zarʁa ḥa-tnaṭṭaʁ il-badla* the blue tie really brings the suit to life. **3** to keep (s.th.) in the air by tossing it up repeatedly. - vn *tanṭiiʁ*; ava *minaṭṭaʁ*.
انتطّق *ʔitnaṭṭaʁ* /vi/ passive of *naṭṭaʁ*. - iva *mitnaṭṭaʁ*.
استنطق *ʔistanṭaʁ* /vi/ to vomit. - vn *ʔistinṭaaʁ*; ava *mistanṭaʁ*.

² ن ط ق

نطاق *niṭaaʁ, niṭaaʁ*↑ /n/ range, scope. *bi-yitwazzaɛ ɛala niṭaaʁ waasiɛ* it is distributed on a wide scale. *niṭaaʁ il-ɛamaliyyaat [mil]* the scope of operations.
منطقة *manṭiʁa, minṭaʁa*↑ /n pl *manaaṭiʁ*/ **1** area, district. *manṭiʁa sakaniyya* a residential area. **2** administrative zone. *manṭiʁa taɛlimiyya* the area under the supervision of a local educational authority. ‖*manṭiʁa ḥaddiyya* the upper limit of a tax bracket.

¹ ن ط و ر

نطور *naṭwar* /vt/ to scatter about, strew in a disorderly fashion. *ḥaʃiiʃ minaṭwar* patchy grass. *ma-tnaṭwar-ʃ^{i} fluus-ak kida* don't fritter away your money like that! - vn *naṭwara*; ava/pva *minaṭwar*.
انتطور *ʔitnaṭwar* /vi/ to scatter or be scattered about, disperse or be strewn in a disorderly fashion. - vn *tinaṭwiir*; ava/iva *mitnaṭwar*.

² ن ط و ر

ناطور *naṭuur* /n pl *nawaṭiir*/ stook or shock of maize stalks.

ن ظ ج see ن ظ ك : *naẓaaga*

ن ظ ر

نظر *naẓar^{i} (u)* /vi/ **1** to look. *ʔin-naas tunẓur-lu b-ɛeen il-iḥtiraam* people regard him with respect. — /vt/ **2** to examine. *laazim nunẓur (f)il-mas ʔala* we must look into the matter. - /the literary passive form occurs/ *ʔig-galsa lli ḥa-tunẓar fiiha d-daɛwa* the session at which the case

will be examined. **3** to jinx, afflict with the evil eye. - vn *naẓar*; ava *naaẓir*; pva *manẓuur*.

نظر *naẓar*[2] /n/ **1** (also *naḍar*↓) eyesight. *naẓar-i ḍiɛif* my sight has become weak. *ma-saddaqt*[i]*-ʃ naẓar-i* I couldn't believe my eyes. *da ʃavla ɛalayya min naẓar-i* it is dearer to me than my sight. *marma n-naẓar* range of sight, seeing distance. *ya naḍar-i [women in trad soc]* an affectionate form of address ≈ apple of my eye! *ʃilaah-i tiɛma f-naḍar-ak [women in trad soc]* may you be afflicted in your sight! **2a** consideration, estimation. *di ʃafkaar miḥtaaga l-ʃiɛaadit naẓar* these ideas need re-consideration. *ʃin-naas minazzilin-ni min naẓar-hum* people think nothing of me. **2b** judgement, opinion. *da miʃ ɛeeb ʃilla f-naẓar-ak* that is a fault in your opinion alone. ‖*maɛduum in-naẓar* lacking in *savoir faire*, gauche. - *kull-ak naẓar* I leave it to your discretion. - *ʃana taḥt in-naẓar* I'm at your service, I'm always available.

نظرة *naẓra*[1] /inst n, pl *-aat*/ a look, a glance. *b-aḥiss*[i] *bil-ɛaar li-ʃinn in-naas bi-ybuṣṣuu-li bin-naẓra di* I feel shame because people look at me that way. ‖*naẓra ya ʃumm*[a] *haaʃim* look upon us, Umm Hashim! aid us, Umm Hashim!

نظرى *naẓari*↑ /adj/ theoretical. *diraasa naẓariyya* theoretical study.

نظريّة *naẓariyya* /n pl *-aat*/ theory. *bi-yidris fikr*[i] *syaasi w-naẓariyya syasiyya* he studies political thought and theory. ‖*miʃ di n-naẓariyya* you haven't got the point, that's not the idea.

ناظر *naaẓir*[1] /n pl *nuẓẓaar*/ supervisor, overseer. *naaẓir madrasa* headmaster. *naaẓir maḥaṭṭa* station-master.

ناظرة *naẓra*[2] /n pl *-aat*/ headmistress.

نظير *naẓiir* **1** /n pl *naẓaayir, nuẓara*/ peer, equivalent. *ʃif-ʃaay da ma-luu-ʃ naẓiir* this tea is peerless. **2**↑ /prep/ in return for, in consideration of.

نظّارة *naḍḍaara* /n pl *-aat*, also pl *naḍaḍiir [joc]*/ **1** pair of spectacles. *naḍḍaara mɛaẓẓama* (or *mkabbara*) binoculars. *naḍḍaarit mayya* underwater goggles. ‖*naḍḍaarit ʃuksijiin* welder's goggles. **2** *[mil, obsol]* medical centre for examining conscripts for the three forces.

نظّاراتى *naḍḍaraati* /n pl *-yya*/ dispensing optician.

منظر *manẓar* /n pl *manaaẓir*/ **1a** sight, spectacle. *manẓar ɣariib* a strange sight. *manẓar yiʃayyib* a sight to make the hair turn grey. **1b** appearance, outward show. *ʃil-ward*[i] *b-yiddi manẓar* the flowers make a (nice) show. *ʃid-dinya manaaẓir [prov]* all that matters in the world is appearances. **2a** scene (of a play). *ʃil-muxrig ḥaawil yurbuṭ il-manaaẓir baɛḍ-a-ha b-baɛḍ* the director tried to tie the scenes to one another. **2b** stage set. **2c** *[cin]* shot.

منظرة *manẓara*[2] **1** /n/ (mere) show, outward (and hypocritical) appearance. *bi-yimsik is-sibḥa lil-manẓara bass* he carries prayer beads merely for the sake of appearances. *bitaaɛ manẓara* a show-off. **2** /adv/ for the sake of showing-off. *bi-yaxdu l-ɛarabiyya manẓara* they treat the car as a status symbol. see further under م ن ظ ر

مندرة *manḍara* (also *mandara*) /n pl *manaaḍir, manaadir*/ *[rur]* reception room for guests in a village house.

المندرة *ʃil-manḍara* /prop n/ beach and adjacent area in the east of Alexandria.

منظار *minẓaar*↑ /n pl *manaẓiir*/ any of a range of scientific instruments for viewing (as, e.g., a telescope, a photo-scope, a speculum).

انتظر *ʃitnaẓar* /vi/ **1** to be jinxed, be afflicted by the evil eye. **2** (impersonal) passive of *naẓar* 1. *bi-yitniẓir-lu bi-ḥtiraam* he is regarded with respect. - iva *mitniẓir*.

ناظر *naaẓir*[2] **1** /vt/ to keep a close watch on, watch carefully over. *ʃil-xayyaaṭa laazim tinaaẓir fuɣl-a-ha* the seamstress should watch over her work carefully. **2** to become similar to. *dilwaqti bass*[i] *baqu mnaẓriin baɛḍ* only now have they become similar to one another. **3** to debate. — /vi/ **4**↓ to peer; stare. *dayman qaaɛid minaaẓir lil-ʃakl* he is always peering at the food. - vn *minaẓra, niẓaara*; ava *minaaẓir*.

مناظرة *munaẓra* /n pl *-aat*/ debate.

اتناظر *ʃitnaaẓir* /vi/ passive of *naaẓir*[2]. - ava/iva *mitnaaẓir*.

انتظر *ʃintaẓar* **1** /vt/ **1a** to wait for. *ʃintiẓir-ni fil-beet* wait for me at home. **1b** to expect. *ʃiḥna mintiẓriin-ak is-saaɛa xamsa* we're expecting you at five. *kunt*[i] *b-tintiẓir ʃinnu ygib-lak ḥaaga* were you expecting him to bring you something? **2** /vi/ to wait. *ʃit-taksi*[i] *b-yaaxud gineeh ɛala kull*[i] *saaɛa ntiẓaar* the taxi charges a pound for each hour of waiting. *ʃitxaṭabna wi-ntaẓarna yiigi sana* we got engaged and waited about a year. - vn *ʃintiẓaar*; ava *mintiẓir, muntaẓir*.

استنظر *ʃistanẓar* = *ʃintaẓar*. - ava *mistanẓar*.

ن ظ ف see ن ض ف

ن ظ ك

نظك *niẓik* = *naẓiik*.

نظاكة *naẓaaka* (also *naẓaaga*) /n/ elegance. *ɛayʃiin ʃaaxir naẓaaka* they are living in style.

نظيك *naẓiik* /adj pl *nuẓaka*/ elegant, swish.

ن ظ م

نظام *niẓaam* /n pl *ʕanẓima, ʕanẓima, nuẓum*/ **1** organization, system, institution. *ʕin-niẓaam it-taʕliimi* the educational system. *ʕil-ḥarb imtiḥaan li-kull il-ʕanẓima lli fil-balad* war is a test of all the institutions in the country. *laazim timʃi ʕala nẓaam fiṛ-ʕakl* you must follow a fixed diet. ‖*fii niẓaam ʕeeh il-lelaa-di* what are the plans for tonight? *-fii niẓaam gooza* we'll be smoking a *gooza*. - *ʕeeh in-niẓaam* what's the idea! **2** type, variety (especially of fixtures etc.). *fii niẓaam taani yirkab bi-masamiir* there is another type which is mounted with nails. *fii niẓaam ism-u divyateer* there is a type called a two-switch system. **3** proper order, orderliness. *ʕayyaam ma kaan fii niẓaam* in the days when things were done properly. ‖*ʕandu nẓaam* he's methodical. - *bi-nẓaam* in order, systematically. **4** *[pol]* régime, political system. *niẓaam iʃtiraaki* socialist system.

نظامى *niẓaami* /adj */ **1** methodical. *ʕana ʕaḥtarim iʃ-faxṣ in-niẓaami* I do respect those who have order in their life. **2** (also *nuẓaami*[1]) in regular government service (of military or quasi-military personnel). *ʕaskari niẓaami* a regular soldier (in contrast with a drafted man). *ʁafiir niẓaami* a government-employed night watchman.

أنظم *ʔanẓam* /el/ more/most neat or ordered.

نظّم *naẓẓam* /vt/ to arrange, organize. *fii muʃrif riyaaḍi bi-ynaẓẓam ʕanʃiṭit iṭ-ṭullaab* there is a sports supervisor who organizes the students' activities. - vn *tanẓiim*; ava/pva *minaẓẓam, munaẓẓam*.

تنظيم *tanẓiim* /n pl *-aat*/ organization, grouping. *tanẓiim dimuqraaṭi* a democratic organization. *tanẓiim sirri* an underground organization.

منظّم *munaẓẓim* /n pl *-aat*/ *[mech]* regulator, regulating device.

منظّم *munaẓẓam* /adj */ orderly, well-organized. *ṭabuur ṭawiil wi-munaẓẓam* a long, orderly queue.

منظّمة *munaẓẓama* /n pl *-aat*/ organization. *munaẓẓamit ʃabaab* youth organization.

اتنظّم *ʕitnaẓẓam* /vi/ to be arranged, be organized. - iva *mitnaẓẓam*.

انتظم *ʕintaẓam* /vi/ to become regular. *xadt il-birʃaam wi-fiʕlan intaẓamit il-ʕiks* I took the pill and my periods did in fact become more regular. *baʕd il-ʕagaaza ḥa-nintiẓim fiʃ-ʃuɣl* after the holiday we shall start working on a regular basis. - vn *ʕintiẓaam*; ava *muntaẓim*.

ن ع ت

نعت *naʕtˆ* /n pl *nuʕuut*/ **1** description. **2** *[gram]* adjective.

ن ع ج

نعجة *naʕga* /n pl *-aat*/ ewe. ‖*siib in-naʕga ya xaruuf [children, abus]* leave the ewe alone, you ram (remark shouted at a man and a woman walking together in the street).

ن ع ر

نعر *naʕar (a)* /vi/ **1** to shout, bellow, roar. *bukra tismaʕ naʕiir-u* (give him time and) you will soon hear him holler! (of s.o. following a dubious course of action). **2** to low (of cattle). - vn *naʕr, naʕiir*; ava *naaʕir*.

نعرة *naʕra* /n pl *-aat*/ **1** /inst n/ a shout, a bellow, a roar. **2** conceit.

نعّر *naʕʕar* /vi/ **1** to shout and bellow repeatedly. **2** to low repeatedly (of cattle). - vn *tanʕiir*; ava *minaʕʕar*.

ن ع س

نعس *niʕis, naʕas (a, i)* /vi/ **1** to drowse. **2** *[rur]* to sleep. - vn *naʕasaan*; ava *naʕsaan*.

نعسان *naʕsaan* /adj */ drowsy, sleepy. *ʕuyuun naʕsaana* languorous eyes.

نعاس *naʕaas* /n/ *[rur]* sleep, sleepiness. *ʕin-naʕaas kaabis ʕalayya* I am sleepy.

ن ع ش [1]

نعش *naʕaʃ (i)* /vt/ to refresh, revive. *xud-lak duʃʃ*[i] *yinʕiʃ-ak* have a shower, it'll freshen you up. - vn *naʕaʃaan*; ava *naaʕiʃ*; pva *manʕuuf*.

نعشة *naʕʃa* /inst n, pl *-aat*/ a refreshing.

منعش *munʕiʃ* /adj/ refreshing.

اتنعش *ʕitnaʕaʃ* /vi/ to be refreshed, be revived. - iva *mitniʕiʃ*.

انتعش *ʕintaʕaʃ* /vi/ **1** to revive, feel refreshed. **2** to become elated, become cheerful. **3** to thrive, flourish. *ʕit-tigaara ntaʕaʃit* trade flourished. - ava *mintiʕiʃ*.

ن ع ش [2]

نعش *naʕʃ* /n pl *nuʕuuf, nuʕúʃa*/ **1** *[Isl]* bier. **2** *[Chr]* coffin.

ن ع ق

نعق *naʕʕaq* /vi/ **1** to caw (of a crow). **2** to hoot (of an owl). - vn *niʕiiq, tanʕiiq*; ava *minaʕʕaq*.

ن ع ك ش

نعكش *naʕkiʃ* /vt/ to put in disarray, mess up. *naʕkiʃt*[i] *ʃaʕr-i* I messed up my hair. *ḥiduum-u mnaʕkiʃa* his clothes are dishevelled. - vn *naʕkaʃa*; ava/pva *minaʕkiʃ*.

منعكشاتى *minaʕkiʃaati* /adj pl *-yya*/ messy, disorganized (of a person).

اتنعكش ʕitnaɛkiʃ /vi/ to be put into disarray, be messed up. - iva *mitnaɛkiʃ*.

[1] ن ع ل

نعل *naɛl* /n pl *nuɛuul, niɛaal, nuɛúla*/ **1** sole (of a shoe). **2** *[rur]* pair of (peasant) shoes.

[2] ن ع ل

نعل *naɛal (a)* /vt/ to curse. *ʕallaah yinɛal ʕabuu-k* God curse your father! - also *laɛan*. - vn *naɛl*; ava *naaɛil*; pva *manɛuul*.

اتنعل ʕitnaɛal /vi/ to be cursed. - iva *mitniɛil*.

انتعل ʕintaɛal = ʕitnaɛal. - iva *mintiɛil*.

ن ع م

نعم *niɛim (a)* /vi/ **1** to become smooth, become level and even. *xad daqn-u wiʃʃeen li-ħadd[i] ma niɛmit* he gave his chin a double shave, till it was smooth. **2** to become fine or soft, reach a fine or soft consistency. *harast il-ɛads[i] l-ɤaayit ma niɛim* I mashed the lentils to a purée. ‖*kalaam-u niɛim qawi baɛd[i] ma xad il-ɛalqa* he's become sweet-tongued after the beating he received. - vn *nuɛuuma, nuɛumiyya*; ava *naaɛim*.

نعم *naɛam[1] (i): naɛam ɛala* to be gracious to, bless (s.o. with s.th.), endow (s.o. with s.th.). *rabb-i-na naɛam ɛalee bil-ɛaql* Our Lord endowed him with wisdom. *ʕinɛimi ɛaleena b-naɤra* grace us with a glance! (when trying to elicit a response from a pretty girl on the street). ‖*naɛam alla ɛaleek* response to *naɛam[2]* and *naɛiiman*. - *ʕallaah yinɛim ɛaleek* response to *naɛiiman*. - vn *naɛamaan*; ava *naaɛim*.

نعوميّة *nuɛumiyya* /n/ smoothness, softness, fineness.

ناعم *naaɛim* /adj */ **1** smooth. *ʕil-ɢalawooz yikkisir wil-musmaar yibqa naaɛim* the thread breaks and the screw is left smooth. ‖*raagil naaɛim* (1) an unctuous man. (2) a spineless or wishy-washy man. - *garr[i] naaɛim maɛa* and *saħab naaɛim li-* to sweet-talk, humour with unctuous words, as in *lamma ʃaxaṭṭ[i] fii ʕibtada ygurr[i] naaɛim maɛaaya* when I snapped at him, he started laying on the charm with me. **2a** of fine consistency. *diqiiq naaɛim* fine flour. **2b** soft. *farʃa naɛma* soft bedding. **3** rich with clarified butter (of certain types of biscuit such as *kaħk* and *ɤurayyiba*).

أنعم ʕanɛam[1] /el/ smoother/smoothest etc.

نعم *niɛm* (the literary variant *niɛma* occurs in elevated speech) /n in constr state/ the best of. *da niɛm il-ʕaxlaaq* he has the best of manners. *ya rabb[i] ʕinnaka niɛma l-muɛiin* O Lord, Thou art the best of helpers!

¶ *wa-niɛm* or *wa-niɛm[i] bi-* extremely polite response to the mentioning of a name. *ʕana ħasan ibn[i] mħammad. - wa-niɛm* (or *wa-niɛm[i] bii*) 'I'm Hasan the son of Muhammad.' 'Praise be (to your illustrious father)!' *ʕana min iʃ-ʃarqiyya - wa-niɛm* (or *wa-niɛm[i] biiha* or *wa-niɛm[i] bir-riggaala*) 'I'm from Sharqiya.' 'Praise be (to your illustrious home and its folk)!' - *wa-niɛm[i] bii* or *wa-niɛm[i] bi-llaah* (1) response to the mentioning of the name of God. *ʃuft[i] luṭf[i] rabb-i-na. - wa-niɛm[i] bii* 'See the kindness of Our Lord!' 'Praise he unto Him!' (2) response to *tiʕamnu bi-llaah* etc. ≈ I accept the sincerity of what you say.

نعمة *niɛma* /n pl *niɛam, naɛaayim*/ **1** God's grace, God's bounty. *niɛmit il-ɛimaad* the grace of baptism. *niɛam rabb-i-na ktiira* how bountiful is our Lord! ‖*wi-ħyaat di n-niɛma* or *win-niɛma* a conventional oath sworn on food, especially bread. **2** comfort, ease of life. *ma-b-yirɛaa-ʃ in-niɛma lli huwwa fiiha* he's doing nothing to safeguard his present comfortable way of life. *baayin ʕinnak miʃ wiʃʃ[i] niɛma* it seems you're not made for a life of ease (said to one who refuses a course of action regarded by the speaker as profitable).

نعم *naɛam[2]* response particle **1** indicating attention ≈ yes? what can I do for you? ‖*ya naɛam* or *naɛameen* familiar or affectionate forms of *naɛam*. **2** requesting the repetition of something not properly heard ≈ excuse me? I beg your pardon? **3** voicing objection to something said ≈ what (the hell) are you saying!

¶ *ʕay naɛam* true, that is so (in open-ended acknowledgement of the correctness of a statement). *ʕay naɛam ḍarabt-u (laakin huwwa yistaahil)* true, I hit him (but that's only what he deserves).

نعام *naɛaam* /coll n/ ostrich(es).

نعامة *naɛaama* /unit n, pl *-aat*/ an ostrich.

نعيم *naɛiim* /n/ great comfort, luxury. *ɛaayiʃ fi-naɛiim* living in heaven-on-earth. *gannaat in-naɛiim* paradise.

¶ *naɛiiman* /interj/ may you feel comfortable! (said as a compliment to one who has just taken a bath or had a haircut).

نواعم *nawaaɛim* /pl n/ **1** soft and refined types of food. **2** precious, delicate and pampered women. *sitt[i] min in-nawaaɛim* a pampered woman.

نواعمى *nawaɛmi* /adj invar/ **1** soft, easy, luxurious. *ɛiiʃa nawaɛmi* an easy life. **2** smooth, unctuous. *kalaam nawaɛmi* smooth talk. ‖*baṣṣa nawaɛmi* a beguiling look.

مناعم *manaaɛim* /pl n/ protected (and hence soft) areas of the human body (e.g., the arm-pit, between fingers and toes). *ʕig-garab yiẓhar il-ʕawwil fil-manaaɛim* mange occurs first in the soft creases of the body.

اتنعم *ʕitnaʕam: ʕitnaʕam ʕala* /vi/ (impersonal) passive of *naʕam ʕala*. *ʕitnaʕam ʕalee bil-ʕilm[i] wil-ʕadab* he's been graced with both learning and good manners. - iva *mitniʕim*.

نعّم *naʕʕam* /vt/ **1** to make smooth, give a smooth finish to. *baʕd[i] ma ysawwii bil-ʔaduum bi-yiigi ynaʕʕam-u bif-faḥḥuuṭa* after he has evened it with the adze, he sets about smoothing it off with the broad chisel. *gaab ʃaraab ʕamal minnu ṭaqiyya ʕaʃaan yinaʕʕam ʃaʕr-u* he got a stocking and made a cap from it, to make his hair smooth. ‖*naʕʕam il-ʃarq[a] ʕala-* to make numerous journeys for the sake of (s.o.), as in *naʕʕamt[a] ʕalee l-ʃarq[i] ma-rdii-ʃ yiigi mʕaaya* (although) I went several times to fetch him he wouldn't come with me! **2** to make fine or soft, bring to a fine or soft consistency. *ʃid-duxxaan da bi-yduqquu wi-ynaʕʕamuu wi-yunxuluu* this tobacco they pound, grind fine, and sieve. - vn *tanʕiim*; ava/pva *minaʕʕam*.

اتنعّم *ʕitnaʕʕam* /vi/ **1** to be smoothed. **2** to be brought to a fine or soft consistency. **3** to live luxuriously, live a life of ease. - ava/iva *mitnaʕʕam*.

أنعم *ʔanʕam²↑: ʔanʕam ʕala* /vi/ to be gracious to, bless (s.o. with s.th.), endow (s.o. with s.th.). *rabb-i-na ʔanʕam ʕalayya bin-nagaaḥ* God granted me success. - vn *ʔinʕaam*; ava *minʕim*.

استنعم *ʕistanʕam* /vt/ **1** to consider (too) soft, smooth or fine. **2** to select for softness, smoothness or fineness. — /vi/ **3** to act or behave in a spineless or delicate manner. *ʕinta ḥa-tistanʕam ma tistargil baqa w-tiftaxal zayy in-naas* are you going to start whining, why don't you be a man and work properly? - vn *ʕistinʕaam*; ava *mistanʕam*.

ن ع ن ش

نعنش *naʕnif* **1** /vt/ to refresh, invigorate. **2** /vi/ to become cheerful, become light-hearted. *ʕil-waaḥid laazim yifarfiʃ wi-ynaʕnif - huwwa ḥadd[i] waaxid minha ḥaaga* one has to have a good time and enjoy oneself - after all, you can't take it with you! - vn *naʕnaʃa*; ava *minaʕnif*.

اتنعنش *ʕitnaʕnif* /vi/ **1** to be refreshed, be invigorated. **2** to become cheerful, become light-hearted. - vn *tinaʕniif*; ava/iva *mitnaʕnif*.

ن ع ن ع

نعنع *naʕnaʕ* /vi/ to become fresh, invigorated or healthy. *ʕiz-zarʕ[i] lamma ʃirib mayya naʕnaʕ* the plants looked healthy and fresh after being watered. - vn *naʕnaʕa*; ava *minaʕnaʕ*.

منعنع *minaʕnaʕ* /adj/ **1** minty. *ṭaʕm-a-ha mnaʕnaʕ* it tastes minty. **2** fresh, healthy. *ya mnaʕnaʕa ya ḥilba [vendor's cry]* fenugreek fresh as mint!

نعناع *niʕnaaʕ* /n/ mint. *sagaayir bi-niʕnaaʕ* mentholated cigarettes.

ن ع و س

نعوس *naʕwis* **1** /vt/ to cause to feel sleepy or drowsy. **2** /vi/ to feel sleepy, feel like sleeping. - vn *naʕwasa*; ava/pva *minaʕwis*.

اتنعوس *ʕitnaʕwis* /vi/ to be made drowsy or sleepy. - vn *tinaʕwiis*; iva *mitnaʕwis*.

ن ع ى

نعى *naʕaʔ (i)* /vt/ to announce the death of. - vn *naʕy*; ava *naaʕi*; pva *manʕi*.

¶ *naʕa ʕalaʔ* to blame, criticize, as in *naʕu ʕaleeha ʕinnaha ma-gat-ʃ[i] maʕa ʕixwat-ha tzur-hum* they criticized her for not coming with her brothers to visit them.

نعى *naʕy* /n/ obituary notice.

اتنعى *ʕitnaʕa* /vi/ passive of *naʕa*. - iva *mitniʕi*.

ن غ ز

نغز *naɣaz (u)* /vt/ **1** to cause a pricking or sharp shooting pain. *taḥt[i] bizz-i b-yunɣuz-ni* the place beneath my breast gives me pricking pains. **2** to prick, prod. ‖*dayman yiḥibb[i] yinɣuz* he always enjoys getting in digs (at people), he's always insinuating (things). - vn *naɣz, naɣazaan*; ava *naaɣiz*; pva *manɣuuz*.

نغزة *naɣza* /inst n, pl *-aat*/ **1** twinge of pain. **2** a prod, a prick.

نغزة *nuɣza* /n pl *-aat, nuɣaz*/ small hole, cavity, cleft. *lu nuɣza f-daqn-u* he has a cleft in his chin. ‖*qaʕdiin bi-yḥaʃʃifu f-nuɣza middariyya* they're sitting smoking hashish in a hidden corner.

نغّز *naɣɣaz, naɣɣiz* /vt/ to poke, prod or prick repeatedly. *kaan bi-ynaɣɣaz il-ḥumaar bi-ʕaṣaaya txiina w-xifna* he was prodding the donkey with a thick rough stick. - vn *tanɣiiz*; ava/pva *minaɣɣaz*.

تنغيزة *tanɣiiza* /inst n, pl *-aat, tanaɣiiz*/ **1** a severe twinge of pain. **2** a prod, a poke.

اتنغّز *ʕitnaɣɣaz* /vi/ to be poked, prodded or pricked repeatedly. - iva *mitnaɣɣaz*.

ن غ ش

ناغش *naaɣif* /vt/ to be playful with (especially a member of the other sex). - vn *minaɣʃa*; ava *minaaɣif*.

اتناغش *ʕitnaaɣif* /vi/ to be playful (with o.a.). *qaʕdiin yitnaɣʃu fil-ʕutubiis ʕeen-i ʕeen-ak* they're carrying on in the bus in front of everyone. - ava *mitnaaɣif*.

ن غ ش و ش
نغشوش *naɣʃuuʃ* /n pl *naɣaʃiiʃ*/ **1** gill. **2** nasal cavity. ‖*biʕiid ʕan naɣaʃiiʃ-ak* not on your nelly! not on your life! - also *naxʃuuʃ*.

ن غ ص
نغّص *naɣɣaṣ* /vt/ to make unpleasant, irritating or loathsome. *rabb-i-na waʕad-u b-waḥda naɣɣaṣit ʕiʃt-u* God gave him a wife who made his life hell. - vn *tanɣiiṣ*; ava/pva *minaɣɣaṣ*.
اتنغّص *ʔitnaɣɣaṣ* /vi/ to become or be made unpleasant, irritating or loathsome. - ava/iva *mitnaɣɣaṣ*.

ن غ م
نغم *naɣam* /coll n pl *ʔanɣaam*/ musical sound. *naɣam il-ʕuud* the sound of the lute. *ma-b-aḥibb[i]-ʃ il-ʔanɣaam il-ʔurubbiyya* I don't like the sound of European music. ‖*qaṭaʕ in-naɣam* he shut up, he became silent.
نغمة *naɣama, naɣma* /n pl *-aat*/ **1** tune, melody type. *naɣama ḥaziina* a sad tune. *naɣamit bayaati* the *bayaati* melody type. ‖*ʔahi di n-naɣama lli ʔana xaayif minha* that's exactly the type of talk I'm afraid of. **2** note of the musical scale.
نغّم *naɣɣam* **1** /vt/ to make musical, make tuneful. *ʔil-bint[i] di ḥilwa f-kull[a] ḥaaga - ḥatta kalam-ha l-ʕaadi bi-tnaɣɣam-u* that girl's beautiful in every way - she even puts a lilt into her ordinary speech. **2** /vi/ to emit musical or tuneful sounds. *rooḥ bi-tiddi ṣoot waaḥid wi-tanya b-tiddi tanɣiim* one pipe is for the drone, the other for the tune. - vn *tanɣiim*; ava/pva *minaɣɣam*.
اتنغّم *ʔitnaɣɣam* /vi/ to be made tuneful. - iva *mitnaɣɣam*.

ن غ م ش
نغمش *naɣmiʃ* **1** /vt/ to touch lightly, tickle. *fii namla bi-tnaɣmiʃ rigl-i* there's an ant tickling my leg. **2** /vi/ to experience a tickling sensation. - vn *naɣmaʃa*; ava/pva *minaɣmiʃ*.
نغمشة *naɣmaʃa* /n pl *naɣamiiʃ*/ tiny scratch mark, fleck. *qumaaʃ ʔabyaḍ fii naɣamiiʃ sooda* white material with tiny black flecks.
اتنغمش *ʔitnaɣmiʃ* /vi/ to be touched lightly, be tickled. - iva *mitnaɣmiʃ*.

ن غ ن غ
نغنغ *naɣnaɣ* /vt/ to pamper, indulge luxuriously. *ʔiza tgawwiztii-ni ḥ-anaɣnaɣ-ik* if you marry me I'll keep you in the lap of luxury. - vn *naɣnaɣa*; ava/pva *minaɣnaɣ*.
اتنغنغ *ʔitnaɣnaɣ* /vi/ to be pampered. - vn *tinaɣniiɣ*; ava *mitnaɣnaɣ*.

ن غ ى
ناغى *naaɣa* /vt/ to speak tenderly to (e.g., a child, a lover). - vn *minaɣiyya*; ava *minaaɣi*.
اتناغى *ʔitnaaɣa* /vi/ to be spoken to tenderly. - iva *mitnaaɣi*.

ن ف ت ل –
نفتالين *naftaliin* <Fr> /n/ naphthalene. *naftaliin bily* moth-balls.

ن ف ث see [2] ن ف س

ن ف ح
نفحة *nafḥa* /n pl *-aat, nafaḥaat*/ gift (particularly from God).

ن ف خ [1]
نفخ *nafax (u)* /vt/ **1** to blow on. ‖*tunfux-u yṭiir* (1) it's as light as a feather. (2) he's a mere weakling, he couldn't put up a fight. **2** to blow up, inflate. *ʔunfux il-ʕagala* pump up the tyre! *ʔil-bikarbunaat bi-yunfux il-ʕagiin* the baking-powder makes the dough rise. ‖*ʔalaat nafx [mus]* wind instruments. - *ʕamaliyyit nafx [surg]* insufflation operation. - *xulxaal nafx* hollow anklets. — /vi/ **3** to blow. *ʔunfux ʕala ṣawabʕ-ak ṭidaffii-ha* blow on your fingers and warm them! ‖*rabb-i-na nafax fi-ṣurt-u [deris]* ≈ he, contrary to his usual performance, did well this time, as in *rabb-i-na yinfux fi-ṣurt-ak wi-tgiib ʕeef maʕaak* I hope you will manage to bring some bread with you this time! **4** to huff and puff (with anger), fume. *bi-yuqʕud yunfux wi-huwwa ṭahqaan* he fumes away when he is fed up. **5** to swell. - vn *nafx, nafaxaan, nifiix*; ava *naafix*; pva *manfuux*.
نفخة *nafxa* **1** /inst n, pl *-aat*/ an exhalation. **2** /n/ pomposity, conceit. *nafxa kaddaaba* or *nafxa ʕal-faaḍi* false pride, empty conceit.
منفوخ *manfuux* /adj */ pompous, conceited.
نفيخة *nuffeexa* /n pl *-aat, nafafiix*/ balloon.
منفاخ *munfaax, minfaax* /n pl *manafiix*/ pump, bellows, squeeze-bulb. ‖*kamira munfaax* folding camera, camera with bellows.
اتنفخ *ʔitnafax* /vi/ **1** to be blown on. **2** to be blown up, be inflated. **3** to become swollen, become distended. ‖*baṭn-i tnafaxit* (1) my stomach became swollen. (2) I felt fed up to the teeth. - *beḍaan-i tnafaxit [coarse]* I felt fed up to the balls. - ava/iva *mitnifix*.
نفّخ *naffax* **1** /vt/ to pump up, inflate (several times or to a great extent). ‖*ʔeeh illi naffax ʕenee-k kida* what made your eyes so swollen? **2** /vi/ to swell up. *ʕenay-ya mnaffaxa* my eyes are swollen. - vn *tanfiix*; ava/pva *minaffax*.

اتنفّخ *ʔitnaffax* /vi/ to be blown up, be inflated (several times or to a great extent). - iva *mitnaffax*.
انتفخ *ʔintafax*↑ = *ʔitnafax*. - vn *ʔintifaax*; ava *mintifix*.

ن ف خ [2]
نافوخ *nafuux* /n/ crown of the head, (loosely also) head. *bi-tʃil-ha ɛala nafux-ha* she carries it on top of her head. *hiyya ɛamlaa-li hawsa f-nafuux-i l-daragit ʔinni mif qaadir ʔafakkar* she's put my head in such a spin I can't think. *ʔinta ħa-ttayyar nafuux-i* you'll drive me out of my mind! *ʔinta ħaaṭiṭ il-ɛeeb kull-u ɛala nafuux-i leeh* why are you putting the blame on my head? ‖ *(ʔiddeet-u maqlab) ṭiliɛ min nafuux-u* (I played a trick on him) such as he's not likely to forget.

ن ف د [1]
نفد *nafad[1], nifid[1] (a)*↑ /vi/ to cease to be available. *ʔiṭ-ṭabɛa l-qadiima nifdit* the old edition isn't available any more. - vn *nafadaan*; ava *naafid*.
استنفد *ʔistanfid, ʔistanfad* /vt/ to use up, exhaust. *ʔil-muwaẓẓaf da stanfid kull[i] ʔagazaat-u* this employee has used up all his holidays. *ʔil-ɛaya huwwa lli stanfid quwwit-u* it's the sickness that has exhausted his strength. - vn *ʔistinfaad*; ava/pva *mistanfid*.

ن ف د [2] see ن ف ز : *nifid[2], nafad[2], naffid, ʔitnaffid[2]*

ن ف ذ see ن ف ز

ن ف ر [1]
نفر *nafar[1] (u)* /vi/ **1a** to shy, baulk (of, e.g., a horse). **1b** to recoil in disgust. *min saaɛit ma ggawwizit-u w-hiyya nafra minnu* from the moment she married him she has not been able to bring herself to go near him. **2** to snort and thus expel mucus from the nostrils (of, e.g., a donkey). - vn *nafr*; ava *naafir, nafraan*.
نفرة *nafra* /pl *-aat*/ instance noun of *nafr*. ‖ *nafrit ħumaar* callus (on the hand, supposedly caused by the mucus of a donkey or the like falling on the affected part).
نفير *nifiir* /n pl *-aat*/ **1** bugle. **2** horn, hooter (of the squeeze-bulb type). **3** megaphone.
نفّر *naffar* /vt/ to cause to recoil in disgust or annoyance. *ʔinta mnaffar-ni min ɛiʃt-i* you've made my life not worth living. *muɛamlit-u naffarit in-naas minnu* his behaviour has made people sick of him. - vn *tanfiir*; ava/pva *minaffar*.
اتنفّر *ʔitnaffar* /vi/ passive of *naffar*. - iva *mitnaffar*.
نافر *naafir*↑ /vt and vi/ to squabble (with s.o.). - vn *minafra*; ava *minaafir*.
مناقرة *munafra* /n pl *-aat*/ squabble, argument.
اتنافر *ʔitnaafir* /vi/ **1** to be argued with heatedly. **2** to draw away (from s.o. or o.a.), fall into disharmony. - vn *tanaafur*; ava *mitnaafir*.
تنافر *tanaafur, tanaafur* /n/ dislike, repugnance.

ن ف ر) [2] (
نفر *nafar[2]* /n pl *ʔanfaar*/ **1** person, individual. *faay li-miit nafar* tea for a hundred people. *kursi nafareen* a two-person seat, a double seat. ‖ *taksi bin-nafar* a taxi in which each passenger pays a (fixed) fare. **2** hired agricultural or construction labourer. **3** *[mil]* private soldier.
نفير *nafiir: la (luh) fil-ɛiir wala fin-nafiir* see ɛiir.

ن ف ر [3] see ن ف و ر : *nafuura*

ن ف ر ي ت
نفريت *nafriit: ɛafriit nafriit* see ɛafriit.

ن ف ز
نفذ *nifid[2], nafad[2] (i)* /vi/ **1** to pass through. *bi-tinfid mil-ħeeṭ li-barra* it passes through the wall to the outside. **2** to escape. *ʔiħtart izzaay raaħ ʔanfid min ʔiid-u* I was at a loss as to how I was going to get out of his clutches. *ʔin nafadt[i] min il-mayya miʃ ħa-tinfid min if-furba [prov]* (if you escape the water, you won't escape the soup) ≈ however many dangers you survive, there will be more waiting for you. *nafad bi-gild-u* he escaped with his skin. **3** to become passable. *ʔis-sikka nifdit* the road has been cleared. - vn *nafadaan*; ava *naafid*.
نفوذ *nifuuz, nufuuz* /n/ influence. *naas luhum* (or *ʔaṣħaab) nifuuz* people of influence.
منفذ *manfaz* /n pl *manaafiz*/ outlet or inlet, entrance or exit.
نفّذ *naffiz* /vt/ **1** to carry out, execute. *ʔana b-anaffiz il-ʔawaamir* I am carrying out orders. *ʔil-muttaham naffiz il-ħukm* the accused served the sentence. **2** to implement in accordance with a plan. *lamma niigi nnaffiz mabna* ... when we're going to put up a building .... *tanfiiz ig-gurnaal* the production of the newspaper. - vn *tanfiiz*; ava/pva *minaffiz*.
تنفيذى *tanfiizi* /adj */ executive. *lagna tanfiziyya* executive committee.
منفّذ *munaffiz* /n */ *[theat, cin]* set builder.
نقّد *naffid* /vt/ **1** to make a hole through, pierce. *ʔik-kahrabaaʔi naffid il-ħeeṭa min il-maṭbax liṣ-ṣaala*

the electrician made a hole in the wall from the kitchen to the living room. **2** to cause to escape. *ma-fii-ʃ ḥadd[a] ḥa-yiqdar yinaffid-ak minni* no one will be able to get you out of my grasp. **3** to bring (s.th.) through from one side of a partition to the other. *takyiif il-hawa laazim tinaffiduu ɛal-ʕooḍa di kamaan* you must bring the air conditioning through to this room too. **4** to (be large enough to) allow (s.o. or s.th.) to pass through. *ʕif-ʃibbaak da ma-ynaffid-ak-ʃ* that window is too narrow for you to get through. ‖ *ʕil-baab yinaffid gamal* (the door is wide enough to let (even) a camel pass through) ≈ kindly get out of here! — /vi/ **5** to lead through, pass through. *ʕil-ḥaara bi-tnaffid ɛala ʃaariɛ kibiir* the lane leads through to a large street. - vn *tanfiid*; ava/pva *minaffid*.

اتنفّذ *ʕitnaffiz* /vi/ to be carried out, be executed. *ʕawamr-i ma-tnaffizit-ʃ* my orders were not carried out. - iva *mitnaffiz*.

اتنفّد *ʕitnaffid* /vi/ passive of *naffid*. - iva *mitnaffid*.

ن ف س [1]

نفس *nafas[1] (i)* /vt/ to jinx, put the evil eye on. *baṣṣ[a] ɛal-ʕakl[i] nafas-u* he looked at the food and gave it the evil eye. - vn *nafasaan*; ava *naafis*; pva *manfuus*.

نفس *nafs* /fem n/ **1** /pl *nufuus*/ **1a** self, psyche, mind. *ḥubb in-nafs* self-love. *nafs-u ḥayya* he's a sensitive person. *kaanit nufuus in-naas mirtaaḥa* people used to be relaxed. *ɛilm in-nafs* psychology. **1b** soul. *xalaaṣ in-nufuus* the salvation of souls. **2** /in constr w def n/ the same .... *nafs ir-raagil* the same man. *fi-nafs il-waqt* at the same time. **3** /in constr w pron suff/ pronominal of reflexivity. *ḥuṭṭ[i] nafs-ak maṭraḥ-i* put yourself in my place. *laazim nuṣbur ɛala nafs-i-na* we must contain ourselves in patience. *ɛala r-raṣiif ʕaw ɛala ʃ-ʃaariɛ nafs-u* on the pavement or on the street itself. ‖ *bi-nafs-* my-, him-, it- etc. self, as in *huwwa da b-nafs-u lli ɛandi* that's (like) the very one I have, *ʕana ɛaayiz il-mudiir yiigi hina b-nafs-u* I want the director to come here personally. - *ga ɛala nafs(-u)* to compromise, sacrifice something of one's own interest, as in *laazim il-waaḥid yistaḥmil wi-yiigi ɛala nafs-u ʃwayya* one has to put up with things and be a little forbearing.

نفسي *nafsi* /adj/ psychological. *ɢalaq nafsi* mental perturbation. *ḥaala nafsiyya* psychological state. ‖ *ʕiṭ-ṭibb in-nafsi* psychiatry.

¶ *nafsiyyan* /adv/ psychologically, mentally.

نفسيّة *nafsiyya* /n pl -*aat*/ psychological state, state of mind. *nafsiyyit-i taɛbaana* I feel low. *nafsiyyit-u kull-a-ha ɤill* he is full of grudges. *bi-yʕassar ɛala nafsiyyit iʃ-ʃaɛb* it affects the people's morale.

نفساني *nafsaani* = *nafsi*.

نفس *nifs* /fem n/ **1** appetite, desire. *bi-txalli l-waaḥid ma-luu-ʃ nifs[i] liʃ-ʃuɤl* it spoils one's enthusiasm for work. *waḍḍabt il-baṭaaṭis wi-xallet-ha tiftaḥ in-nifs* I prepared the potatoes and made them appetizing. *ʕin-nifs[i] miʃ ṭalba ʕakl[i] min sana* I haven't felt like eating for a year. *bi-yiftaval bi-nifs* he works with enthusiasm. *nifs-i masduuda* I have no appetite, I have no desire, as in *nifs-i masduuda ɛal-muzakra* I don't feel like studying. **2** nature, character. *nifs-u ḥilwa* (or *xaḍra*) (1) he's gentle and unassuming. (2) he's undiscriminating (particularly with regard to food or women). **3** /in constr w pron suff/ modal of desire or inclination. *ʕana nifs-i f-ɛarabiyya* I wish I had a car! *ʕana nifs-i ʕaɛraf bass* all I want is to know. *nifs-u yitɛayyin fiʃ-ʃirka* he wants to be given a post in the company. **4** envy, the evil eye. *di nifs[i] gat-lak* someone must have put the evil eye on you.

نفس *nafas[2]* /n pl *ʕanfaas*/ **1** breath. ‖ *nafas fi-ɢafaṣ* (a breath in a palm crate) ≈ extremely weak, barely alive. - *lissa fii ʕin-nafas* the breath of life is still in him, he's still alive. *ʕidda nafas li-* to pump air into, as in *kull[i] ma tiddi l-babuur nafas yiɛla* the more air you pump into the stove the higher it burns. **2** puff, drag (e.g., on a cigarette). — /no pl/ **3a** strength, energy. *ma-fiyyaa-ʃ nafas ʕaɛmil ʕaktar min kida* I don't have the strength to do any more. *ɛandu sabɛiin sana w-lissa fii nafas yaaxud duff[i] baarid iṣ-ṣubḥ* he's seventy years old and is still strong enough to take a cold shower in the morning. **3b** support, backing. *ʕil-baraka f-siyadt-ak wi-nafas siyadt-ak* all the credit is due to you and your efforts (on our behalf), Sir! *ɛawziin nafas-ak maɛaana ɛafaan il-mas ʕala timʃi* we need your good offices to make the thing work. **4** personal touch (in cooking). *nafas-ha kwayyis fiṭ-ṭabiix* she's a good cook with an original touch.

نفسة *nafasa* /n/ **1** puerperium, after-birth condition in which women bleed. - /adjectivally/ *ʕis-sitt[i] lissa nafasa* the lady's still in puerperium. **2** *[Isl]* state of ritual impurity of women after childbirth.

نفاس *nifaas* /n/ parturition, childbirth.

نفيس *nafiis* /adj */ precious.

أنفس *ʕanfas* /el/ more/most precious.

اتنفس *ʕitnafas* /vi/ to be struck by the evil eye. - iva *mitnifis*.

نفّس *naffis* /vt/ **1** to cause (s.th. inflated) to leak. *ya ʕax-i naffist il-ɛagala* hey mate! you've deflated the tyre! **2** to give (a new mother) proper food and atten-

tion. — /vi/ **3** to leak out (of air, gas etc.). *ʕil-hawa bi-ynaffis mil-bistim* the air is leaking from the piston. **4** to have a leak, be holed or punctured. *balfi mnaffis* a leaky valve. *ʕil-ɛilba mnaffisa* the can is punctured. - vn *tanfiis*; ava/pva *minaffis*.

¶ *naffis ɛan↑* to find an outlet for, give vent to (feelings, desires etc.).

اتنفّس *ʕitnaffis* /vi/ **1** to breathe. **2** to utter a word, breathe a word. *min waraa tirxi w-quddaamu ma-tiqdar-fi titnaffis* she chatters behind his back but in front of him she doesn't dare say a thing. **3** passive of *naffis* 1 and 2. - ava/iva *mitnaffis*.

تنفّس *tanaffus↑* /n/ breathing, respiration. *tanaffus ṣinaaɛi* artificial respiration.

تنفّسي *tanaffusi↑* /adj/ respiratory. *ʕig-gihaaz it-tanaffusi* the respiratory system (of the body).

نافس *naafis* /vt/ to compete with. - vn *munafsa*; ava *minaafis*.

اتنافس *ʕitnaafis* /vi/ to compete with one another. - ava *mitnaafis*.

تنافس *tanaafus↑* /n/ competition.

ن ف س ²

نفّاث *naffaas* /adj/ jet-propelled. *muḥarrik naffaas* a jet engine.

نفّاثة *naffaasa* /n pl *-aat*/ jet plane.

ن ف ش

نفش *nafaʃ (i)* **1** /vi/ to swell, become puffed up. *ʕir-ruzzi b-yinfiʃ fil-mayya* the rice swells in the water. *ʕafandi laabis ɋiyaafa w-manfuuʃ* a gentleman fashionably dressed and puffed up (with conceit). **2** /vt/ to ruffle, tease (feathers, hair). - vn *naff, nafaʃaan*; ava *naafiʃ*; pva *manfuuʃ*.

نفش *naff* for the phrase *ɛaffi naff* see *ɛaff*.

نفشة *nafʃa* /pl *-aat*/ instance noun of *naff*.

اتنفش *ʕitnafaʃ* /vi/ to be or become ruffled, be teased (of feathers, hair). - ava/iva *mitnifiʃ*.

نفّش *naffiʃ* /vt/ to tease out, fluff out. - vn *tanfiiʃ*; ava/pva *minaffiʃ*.

اتنفّش *ʕitnaffiʃ* /vi/ to be teased out, be or become fluffed out. - ava/iva *mitnaffiʃ*.

ن ف ض

نفض *nafaḍ (u)* /vt/ to shake out, clean by shaking. *ʕunfuḍi s-sagagiid* shake out the carpets! ‖*nafaḍ ʕiid-u min il-ḥikaaya kull-a-ha* he washed his hands of the whole business. - vn *nafḍ, nafaḍaan*; ava *naafiḍ*; pva *manfuuḍ*.

نفضة *nafḍa* /pl *-aat*/ instance noun of *nafḍ*.

منفضة *manfaḍa* /n pl *manaafiḍ*/ **1** any of a range of implements for dusting (as a dusting cloth, a feather duster, a carpet-beater). **2** ashtray.

اتنفض *ʕitnafaḍ* /vi/ to be shaken or shake oneself. *ʕis-siggaad kull-u tnafaḍ* all the carpets have been shaken out. *b-atnifiḍ mil-bard* I'm shivering with cold. - ava/iva *mitnifiḍ*.

نفّض *naffaḍ* /vt/ **1** to beat the dust from. *naffaḍt is-siriir* I shook out the bed linen. *naffaḍ il-badla* brush down the suit! *naffaḍ-li g-gazma* dust off my shoes! **2** to remake (a mattress, pillow or the like, by removing the cotton stuffing, cleaning it and fluffing it). **3** to make penniless. *ʕana mnaffaḍ* I am flat broke. - vn *tanfiiḍ*; ava/pva *minaffaḍ*.

اتنفّض *ʕitnaffaḍ* /vi/ **1** to be cleaned of dust. **2** to be remade (of a mattress, pillow or the like). **3** to be made penniless. - iva *mitnaffaḍ*.

انتفض *ʕintafaḍ* /vi/ **1** to shake, shudder. **2** to jump, start. - vn *ʕintifaaḍ*; ava *mintifiḍ*.

انتفاضة *ʕintifaaḍa* /pl *-aat*/ instance noun of *ʕintifaaḍ*. *ʕintifaaḍit moot* death-throe. *ʕintifaaḍit ig-geef* army revolt.

ن ف ط

نفط *naft* /n/ petroleum.

ن ف ع

نفع *nafaɛ (a)* **1** /vt/ to be of use to. *ʕij-jakitta di tinfaɛ-ak* would this jacket be of any use to you? **2** /vi/ to be of use, be effective. *xadti ɛlaag laakin ma-nafaɛ-ʃ* I underwent treatment but it did no good. *ʕik-kalaam da ma-yinfaɛ-ʃ* that's no good, that won't do. *nafaɛ-u ʕeeh* what use is it? what's it good for? ‖*la kida naafiɛ wala kida naafiɛ* there's no possible solution. - vn *nafɛ, nafaɛ, nafaɛaan*; ava *naafiɛ*.

نفعي *nafɛi* /adj */ selfish, opportunist, self-serving.

نفعة *nafaɛa* = *manfaɛa*. *ma-fii-ʃ minnu nafaɛa* no good is to be had out of him.

أنفع *ʔanfaɛ* /el/ more/most useful or effective.

منفعة *manfaɛa* /n pl *manaafiɛ*/ interest, advantage. *ma-fii-ʃ minnu manfaɛa* there's nothing to be got out of it. *ma-lii-ʃ manfaɛa fil-mawḍuuɛ* I've no personal interest in the matter.

منفعجي *manfaɛgi* /n pl *-yya*/ opportunist.

نفّع *naffaɛ* /vt/ to cause to profit, benefit (by giving one's custom to or by giving work to). *ma-bi-ynaffaɛ-fi ḥadi min bayyaɛiin ḥarit-na b-ɋirf* he doesn't give custom to any of the dealers in our lane, not even a

piastre's worth. ‖*ya baxt illi naffaɛ wi-stanfaɛ [prov]* ≈ blessed is he who while making a profit profits others. - *naffaɛ-na ya beeh* your assistance, sir! (said, e.g., by beggars and petty traders). - ava/iva *minaffaɛ*.
اتنفّع ʔitnaffaɛ /vi/ passive of *naffaɛ*. - iva *mitnaffaɛ*.
انتفع ʔintafaɛ↑ = ʔistanfaɛ. - vn ʔintifaaɛ; ava *mintifiɛ*.
استنفع ʔistanfaɛ /vi/ to profit, benefit. *b-astanfaɛ min kull¹ gneeh bi-talaata saay* I make a profit of three piastres on every pound. - vn ʔistinfaaɛ; ava *mistanfaɛ*.

ن ف ف
نفّ *naff (i)* /vi/ *[coarse]* to blow one's nose. - vn *naff, nafafaan*; ava *naafif*; pva *manfuuf*.
نفّة *naffa¹* /n pl *-aat*/ *[coarse]* **1** instance noun of *naff*. **2** a piece of nasal mucus, snot.
اتنفّ ʔitnaff /vi/ *[coarse]* (impersonal) passive of *naff*. *ʔil-mandiil da ma-yitnaff¹-ʃ fii* no one could blow his nose in this (dirty) handkerchief! - iva *mitnaff*.

ن ف ق ¹
نفق *nafaq¹ (u)* /vi/ **1** to pay maintenance (e.g., for children, a divorced wife). **2↓** to give gifts (to one's fiancée). - vn *nafaqaan*; ava *naafiq*; pva *manfuuq*.
نفقة *nafaqa* /n pl *-aat*/ **1** maintenance, alimony. **2↓** gift of food given to an engaged girl by her fiancé on the occasion of a festival.
اتنفق ʔitnafaq /vi/ (impersonal) passive of *nafaq¹*. *ʔitnafaq ɛaleeha talat siniin* she was given engagement presents for three years. - iva *mitnifiq*.

ن ف ق ²
نافق *naafiq* /vt/ to act hypocritically (towards). *bi-ynaafiq il-mudiir* he's making up to the director. - vn *nifaaq, minafqa*; ava *minaafiq*.
نفاق *nifaaq* /n/ hypocrisy.
منافق *munaafiq* /n */ hypocrite.
اتنافق ʔitnaafiq /vi/ to be treated with hypocrisy. - iva *mitnaafiq*.

ن ف ق ³
نفق *nafaq²* /n pl *ʔanfaaq*/ tunnel, underpass.

ن ف ل
نفل *nafl* /n/ *[Isl]* supererogatory acts of devotion.
نفلة *nifla* /n pl *-aat, nifal*/ *[rur]* an extra amount (usually of land) added at a time of partitioning to compensate for some defect. *ʔiddinaa-lu nifla ɛand il-qisma ɛafaan xad il-ʔarḍ il-biɛiida* we gave him an extra share when we divided the land because he took the farther plot.
نوافل *nawaafil* = *nafl*.

نفّل *naffil* /vt/ *[rur]* to give (s.o.) an extra amount (usually of land) at a time of partitioning to compensate for some defect in his share. - vn *tanfiil*; ava/pva *minaffil*.
اتنفّل ʔitnaffil /vi/ **1** passive of *naffil*. **2** to perform *nawaafil*. - ava/iva *mitnaffil*.

ن ف م ب ر
نوفمبر *nufimbir* /n/ November.

ن ف ن ف
نفنف *nafnif* /vi/ **1** to break out in blisters. **2** to subside (of a swelling). **3** to have a runny nose and be constantly blowing it or sniffing. *ɛandu bard¹ w-qaaɛid yinafnif ṭuul in-nahaar* he's got a cold and is constantly blowing his nose. - vn *nafnafa*; ava *minafnif*.

ن ف و ر
نافورة *nafuura* /n pl *-aat*/ fountain.

ن ف ى
نفى *nafa (i)* /vt/ **1** to deny. *nafu ʔayy¹ ɛlaaqa liihum bil-mawḍuuɛ* they denied having any connection with the matter. ‖*ʃuhuud in-nafy [leg]* witnesses for the defence. **2** to exile. - vn *nafy*; ava *naafi*; pva *manfi*.
نفية *nafya* /pl *-aat*/ instance noun of *nafy*.
نفاية *nifaaya↑* /n pl *-aat*/ waste matter, rubbish. *nifayaat il-maṣaaniɛ* factory wastes.
اتنفى ʔitnafa /vi/ **1** to be denied. **2** to be exiled. - iva *mitnifi*.
نفّى *naffa²* /vt/ *[agric]* **1** to weed out. *bi-ynaffu n-nigiil* they weed out the couch grass. **2** to clear (s.th.) of weeds. *naffu r-ruzz* they cleared the rice of weeds. - vn *tanfiyya*; ava/pva *minaffi*.
اتنفّى ʔitnaffa /vi/ passive of *naffa²*. - iva *mitnaffa*.
انتفى ʔintafa = ʔitnafa. - iva *mintifi*.

ن ق ا ر
نقارة *naqaara: ʔil-filuus bi-truuḥ faqaara naqaara* the money is going down the drain.

ن ق ب ¹
نقب *naqab (u)* /vt/ *[rur]* to make a hole in (a wall) by removing bricks (usually, in order to steal what is on the other side). *ʔil-ḥaramiyya naqabu z-ziriiba* the thieves made a hole in the wall of the pen (and stole the animals). - vn *naqb, naqabaan*; ava *naaqib*; pva *manquub*.
نقب *naqb* **1** /vn/ ‖*naqb-u ga* (or *ṭiliɛ naqb-u) ɛala foona (faḍya) [prov]* (he made a hole in the wall of an empty

granary) ≈ his efforts were wasted. **2** /n/ pass between hills.

نقبة *naqba* /pl *-aat*/ instance noun of ***naqb***.

انتقب *ʔitnaqab* /vi/ passive of *naqab*. -iva *mitniqib*.

نقّب *naqqab* /vi/ to prospect. *fii ʃarikaat ʔagnabiyya ktiira bi-tnaqqab ɛala l-bitrool fi-maṣr il-yomeen dool* there are many foreign companies prospecting for oil in Egypt these days. -vn *tanqiib*; ava *minaqqab*.

انتقب *ʔitnaqqab* /vi/ (impersonal) passive of *naqqab*. *ʔil-bitrool mumkin yitnaqqab ɛalee fil-baḥr* oil can be prospected for in the sea. -iva *mitnaqqab*.

² ن ق ب

نقابة *niqaaba, niqaaba* /n pl *-aat*/ **1** labour union, professional association. *niqaabit ɛummaal in-nasiig* the textile workers' union. *niqaabit il-mihan iṭ-ṭibbiyya* the association of the medical professions. **2** agricultural co-operative.

نقابى *niqaabi* /adj */ pertaining to a union, association, co-operative etc.

نقيب *naqiib* /n pl *nuqabaaʔ, nuqaba*/ **1** head of a professional association. *naqiib iṣ-ṣuḥafiyyiin* the head of the journalists' association. ‖*naqiib il-ʔaʃraaf* head of the descendants of the Prophet Muhammad. **2a** *[mil]* captain. **2b** *[nav]* lieutenant. **2c** *naqiib ṭayyaar* flight-captain.

نقيب *niqiib: ya baxtⁱ min kaan in-niqiib xaal-u [prov]* how lucky is he whose uncle is a man of influence!

³ ن ق ب see ل ق ب: *naqb*

ن ق ح

نقح *naqaḥ (a)* **1** /vi/ to throb (with pain). *gism-i b-yinqaḥ maṭraḥ il-ɛamaliyya* my body throbs where the operation was done. **2** /vt/ to deal a sharp blow to. *raaḥ naqḥ-u f-manaxiir-u* he upped and busted him in the nose. -vn *naqḥ, naqaḥaan*; ava *naaqiḥ*; pva *manquuḥ*.

نقح *naqḥ* /adj invar/ terrific, tremendous. *ʔiddet-lu ɛalqa naqḥ* I gave him a terrific thrashing. *bintⁱ naqḥ* a smashing girl.

أنقح *ʔanqaḥ* /el/ more/most. *da naṣṣaab wi-ʔaxuu ʔanqaḥ minnu* he's a fraud and his brother is worse.

اتنقح *ʔitnaqaḥ* /vi/ to be dealt a sharp blow. -iva *mitniqiḥ*.

¹ ن ق د

نقد *naqad (u)* /vt/ to hand over (cash) to (s.o.). *naqadt-u ʔugrit-u* I handed over his wages. -vn *naqd, naqadaan*; ava *naaqid*; pva *manquud*.

نقد *naqd¹, naqd¹* /n/ **1** money, finance. *ʔidaarit in-naqd* monetary administration. *waraqit naqd* currency note. **2** cash (as distinct from other forms of payment). *kull il-mabiɛaat bin-naqd* all sales are in cash. ‖*filuus naqdⁱ w-ḥurra* hard honest cash. — /adv/ **3** in cash. *ʔana ʃarii-ha naqd* I've bought it for cash.

¶ *naqdan* /adv/ in cash.

نقدى *naqdi* /adv/ in cash. *dafaɛtⁱ naqdi* I paid cash.

نقديّة *naqdiyya* /n/ **1** /pl *-aat*/ cash payment. **2** /no pl/ money, cash. *ʔiid-ak ɛan-naqdiyya* hand over the cash!

نقود *nuquud* /pl n/ money, currency. *nuquud maɛdaniyya* coins (as distinct from banknotes).

² ن ق د

نقد *naqad (u)* /vt/ to criticize. *miʃ laazim tinqud taṣarrufaat-u ɋuddaam in-naas ɛaʃaan ma-tiḥriguu-ʃ* you mustn't criticize his behaviour in front of other people lest you embarrass him. -vn *naqd*; ava *naaqid*; pva *manquud*. -

نقد *naqd², naqd²†* /n/ criticism. *naqdⁱ ʔadabi* literary criticism.

ناقد *naaqid* /n pl *nuqqaad*/ critic. *naaqid ʔadabi* literary critic.

انتقد *ʔintaqad, ʔintaqad* /vt/ to criticize. *miin yiqdar yintiqid kalaam-ak illi kull-u durar* who could ever criticize your words, all of which are pearls of wisdom. -vn *ʔintiqaad, ʔintiqaad*; ava *mintiqid*.

انتقاد *ʔintiqaad* /n pl *-aat*/ criticism, critical remark, disapproving remark.

منتقد *muntaqad* /adj */ deserving of criticism, shameful.

³ ن ق د

منقد *manqad* /n pl *manaaqid*/ metal or earthenware brazier (see Pl.A, 6).

ن ق ذ see ن ق ز

¹ ن ق ر

نقر *naqar (u)* /vt/ **1a** to peck, peck at, peck up. *ʔid-diik bi-yunqur il-ḥabbⁱ mil-ʔarḍ* the cock pecks up the grain from the ground. **1b** to make a hole in. *naqar il-ʔarḍⁱ b-watad* he dibbled the ground with a peg. **1c** to hammer in (thin objects in particular). *naqar il-watad fil-ʔarḍ* he drove the peg into the ground. **2** to deal (s.o.) a sharp, quick blow. *naqart-u b-zalaṭa* I hit him with a pebble. ‖*naqarit-u ɛeen* she put the evil eye on him. **3** *[carp]* to cut a mortise in. **4** to tap (on), rap (on),

drum (on). *naqart[a] (ɛala) l-baab* I gave a tap on the door. *bi-yḥaawil yunqur il-bilya btaaɛit zimiil-u* he tries to knock his companion's marble. *naqart[a] ɛal-maktab bi-ṣawabɛ-i* I drummed on the desk with my fingers. ‖ *ʔalaat in-naqr* percussion instruments. **5** to spot, detect. *naqart-u fiʃ-ʃariɛ* I spotted him in the street. *naqar il-ɣalṭa* he spotted the mistake. ‖ *naqart[i] suʔaal mi-lli gambi* I cribbed (the answer to) a question from the person next to me. — /vi/ **6** to throb. *dimaaɣ-i b-tunqur* my head is throbbing. - vn *naqr, niqiir, naqaraan*; ava *naaqir*; pva *manquur*.

نقرة *naqra* /inst n, pl *-aat*/ a peck, a dent, a tap, a knock etc. ‖ *di naqra wi-di naqra* this is a different matter altogether.

ناقر *naaqir[1]* see *niqiir*.

نقرة *nuqra* /n pl *nuqar, nuqraat*/ hole, hollow, declivity. ‖ *liɛbit in-nuqra* a children's game with marbles in which one player tries to dislodge his opponent's marble from a hollow in the ground by throwing his marble against it.

نقر *niqr: ḥaaṭiṭ niqr-(u) min niqr-(..)* (he's) always ready to pick on (s.o.). - also *qirn*.

نقرى *niqari, nuqari* /n * and pl *-yya*/ nagger, pesterer.

نقرتى *naqarti = niqari*.

نقرتى *nuqarti* /n pl *-yya*/ player of any drum struck with a stick.

نقير *niqiir: (ɛamliin zayy[i]) naaqir wi-nqiir* always fighting, always at one another's throats.

نقّارة *nuqqaara* /n pl *-aat, naqaqiir*/ *[non-Cairene]* type of metal drum played with sticks.

نقّاريّة *nuqqariyya = nuqqaara*. ‖ *zayy[i] ɛaṣaɛiiṣ in-nuqqariyya* (as thin as) drum sticks (usually of a woman's legs).

منقرة *manqara* /n pl *manaaqir*/ hand hoe of the same shape as a *faas* (see Pl.D, 6) but smaller.

منقار *munqaar, minqaar* /n pl *manaqiir*/ **1** beak. **2** *[carp]* mortise chisel.

اتنقر *ʔitnaqar* /vi/ passive of *naqar*. - iva *mitniqir*.

نقّر *naqqar* /vt/ **1** to peck repeatedly at. **2** to make holes in. *ʔil-ɛitta naqqarit il-fustaan* the moths made holes in the dress. **3** *[agric]* to distribute (seed, fertilizer etc.) among a number of holes. *bi-naaxud kimaawi wi-nnaqqar-u fil-xaṭṭ* we take chemical fertilizer and distribute it along the holes (prepared) in the furrow. — /vi/ **4** to throb hard or repeatedly. **5** to tap repeatedly. **6** to nag. - vn *tanqiir*; ava/pva *minaqqar*.

اتنقّر *ʔitnaqqar* /vi/ passive of *naqqar*. - iva *mitnaqqar*.

ناقر *naaqir[2]* /vt/ to nag, pester. - vn *niqaar, minaqra, minaqra*; ava *minaaqir*.

اتناقر *ʔitnaaqir* /vi/ **1** to keep nagging each other. *ʔitnaqru ṭuul is-sikka fa-wṣilt il-beet miṣaddaɛ ṭamaam* they squabbled all the way so I got home with quite a headache. **2** to be nagged. - ava/pva *mitnaaqir*.

ن ق ر[2] see ن ق ا ر: *naqaara*

ن ق ر ز

نقرز *naqraz* **1** /vi/ to drum, make a drumming sound. *bi-ynaqraz ṭuul il-waqt[a] ɛaṣ-ṣiniyya ɛaʃaan yigzib iz-zabaayin* he drums all the time on the tray to attract the customers. **2** /vt/ to keep hitting (s.o.). *naqraz-u bil-ɛaṣaaya* he kept rapping him with the stick. - vn *naqraza*; ava/pva *minaqraz*.

نقرزان *naqrazaan* /n/ drum resembling a kettledrum but smaller, or a pair of such drums.

اتنقرز *ʔitnaqraz* /vi/ to be hit repeatedly. - vn *tinaqriiz*; ava *mitnaqraz*.

ن ق ر س

نقرس *naqras, nuqrus, naqrasṭ* /n/ gout.

ن ق ر ش

نقرش *naqraʃ* /vt/ **1** to make gay or colourful. **2** to ornament, decorate. *naqrafu l-beet qabl il-faraḥ* they decorated the house before the wedding. - vn *naqrafa*; ava/pva *minaqraf*.

اتنقرش *ʔitnaqraf* /vi/ passive of *naqraf*. - vn *tinaqriiʃ*; ava *mitnaqraf*.

ن ق ز

أنقذ *ʔanqaz* /vt/ to save, rescue. *ʔirmi nafs-ak fil-baḥr[i] wi-nqiz-ha* throw yourself in the sea and save her! - /the literary passive also occurs/ *ʔana ʔunqizt[i] min il-muʃkila di fil-waqt il-munaasib* I was bailed out of that problem at the right moment. - vn *ʔinqaaz*; ava *munqiz*.

منقذ *munqiz* /n */ rescuer.

ن ق س

ناقوس *naquus* /n pl *nawaqiis*/ **1** *[Chr]* pair of cymbals played to accompany anthems in the Coptic Church. **2**↑ bell. ‖ *naaquus il-xaṭar* ≈ the writing on the wall.

ن ق ش

نقش *naqaʃ (u, i)* /vt/ **1a** to pattern, ornament. *qumaaʃ manquuf* patterned cloth. *kaḥk[i] manquuf* crimped *kaḥk*. **1b** to make a pattern with. *bi-yunqufu l-ḥinna ɛala ʔidee-hum* they make patterns with the henna on

their hands. **2** *[slang]* to crib from (a book, another's examination paper etc.). - vn *naqʃ, naqafaan*; ava *naaqif*; pva *manquuf*.

نقش *naqʃ* **1** /vn/ ‖ *qumaaf naqʃ* patterned cloth, figured cloth. **2** /n pl *nuquuf*/ pattern, ornamentation.

نقشة *naqʃa* /n pl *-aat*/ pattern.

نقّاش *naqqaaf* /n */ house-painter, decorator.

منقاش *munqaaf, minqaaf* /n pl *manaqiif*/ pastry crimper.

اتنقش *ʃitnaqaf* /vi/ passive of *naqaf*. - iva *mitniqif*.

نقّش *naqqaf* /vt/ to pattern (a number of things one after the other). *qaʕadu ynaqqafu fik-kaḫk[i] ṭuul il-leel* they were up all night decorating the cookies. - vn *tanqiif*; ava/pva *minaqqaf*.

اتنقّش *ʃitnaqqaf* /vi/ passive of *naqqaf*. - iva *mitnaqqaf*.

ناقش *naaqif* /vt/ **1** to discuss. *ʃigtimaaʕ bi-nnaaqif fii ʃil-maʕraka* a meeting at which we discuss the battle. **2** to hold a discussion with. *ʃil-qaadi bi-ynaqif il-muḫamiin fil-ʃasaniid il-qanuniyya* the judge is discussing the legalities of the case with the lawyers. - vn *niqaaf, minaqfa, munaqfa*; ava/pva *minaaqif*.

نقاش *niqaaf*†, *niqaaf* /n/ discussion.

مناقشة *munaqfa, munaqfa* /n pl *-aat*/ **1** discussion, argument. **2** quizzing, interrogation.

اتناقش *ʃitnaaqif* /vt/ **1** passive of *naaqif*. **2** to discuss together. - ava/iva *mitnaaqif*.

ن ق ص

نقص *niqiṣ* or *nuquṣ (a)* /vt/ **1** to be lacking from. *ʃil-beet yinqaṣ-u ḫagaat kitiir* the house needs a lot of things. *ʃilli naaqiṣ il-maktab makana* what the office needs is a typewriter. **2** to lack, be in need of. *ʃil-qaʕda kaanit naqṣaa-k* you were missed at the get-together. ‖ *ʃana mif naaqiṣ* ≈ I've had it up to here! - *huwwa ʃiḫna naqṣiin-ak* ≈ we already have enough on our hands without your imposing yourself too! — /vi/ **3** to be lacking, be missing. *ʃana yinqaṣ minni xamastaafar gineeh* I'm fifteen pounds short. *mumkin ʃafḫat minnak illi yinqaṣ ʕandi min il-lawaazim* may I borrow from you the things that I don't have at home? *ʃid-dawa da naaqiṣ min is-suuq* this medicine is not available on the market. ‖ *da lli kaan naaqiṣ* ≈ that's all we needed! - *naaqiṣ* ... ≈ the last straw would be ..., all that's needed now is ..., as in *naaqiṣ tiqul-li ʃazaʏʏaṭ-ak kamaan* all I need now is for you to ask me to spoon-feed you! **4** to become less, decrease. *ʃil-mizaniyya niqṣit is-sanaa-di* the budget went down this year. ‖ *niqiṣ fi-ʕenee(-hum)* to lose standing in (their) eyes. - vn *naqṣ, nuqṣaan*; ava *naaqiṣ*.

نقص *naqaṣ (i)* /vt/ to empty some of the contents from (a container). *ʃinqiṣ il-ḫalla* empty some out of the pot! - vn *naqṣ*; ava *naaqiṣ*; pva *manquuṣ*.

نقص *naqṣ* /n/ lack, shortage, deficiency. ‖ *murakkab naqṣ* inferiority complex. - *ʃir-raqṣ[i] naqṣ [prov]* ≈ to dance is to lose dignity.

ناقص *naaqiṣ* **1** /adj */ lacking, deficient. ‖ *bi-naaqiṣ* at a loss, as in *ḫa-ybiʕ-ha l-waaḫid zimiil-u ḫatta bi-naaqiṣ* he'll sell it to a colleague albeit at a loss. **2** /n/ *[elec]* negative pole.

أنقص *ʃanqaṣ* /el/ less/least.

نقّص *naqqaṣ* /vt/ to reduce, diminish, *naqqaṣt-u talat nimar* I reduced him three points. *naqqaṣu ḫaqq-i* they cut my wages. - vn *tanqiiṣ*; ava/pva *minaqqaṣ*.

اتنقّص *ʃitnaqqaṣ* /vi/ to be reduced, be diminished, be cut. - iva *mitnaqqaṣ*.

استنقص *ʃistanqaṣ* /vt/ **1** to consider lacking, deficient, defective or inferior. *ʃistanqaṣt ik-kimmiyya* I thought the quantity was short. *lamma smiʕt[i] .kalaam-u stanqaṣt-u wi-ʕrift innu nadl* when I heard what he'd said he fell in my estimation and I realized that he was a scoundrel. **2** to select for being lacking, deficient, defective or inferior. *ʃistanqaṣ-lak fiwaal ʕaʃaan tiʕraf tifiil-u* choose a sack that is not full so that you can carry it. - vn *ʃistinqaaṣ*; ava *mistanqaṣ*.

ن ق ض

نقض *naqaḍ (u)* /vt/ **1** to sort through, pick through. **2** to select, pick out. *ʃinquḍ-li kiilu ṭuuṭa gamda lis-salaṭa* pick me a kilo of firm salad tomatoes. **3** to abrogate, nullify. *leeh il-maḫkama naqaḍit il-ḫukm* why did the court annul the verdict? *naqaḍti wuḍuww-i [Isl]* you have invalidated my ablution. - vn *naqḍ, naqaḍaan*; ava *naaqiḍ*; pva *manquuḍ*.

نقض *naqḍ* /n/ *[leg]* cassation. *maḫkamit in-naqḍ* the Court of Cassation. ‖ *ʃayy[i] ḫukm[i] yquul-u ma-fi-huu-ʃ naqḍ[i] ʃaw ʃibraam* no decision of his is ever challenged.

نقضة *naqḍa* **1** /pl *-aat*/ instance noun of *naqḍ*. **2** /coll n/ rejects (particularly, of vegetables, small miscellaneous consumer items etc.), left-overs. - /adjectivally/ *naas naqḍa* rabble.

أنقاض *ʃanqaaḍ, ʃanqaaḍ* /pl n/ ruins, rubble, debris. *ʃil-beet inhaar wi-fii naas taḥt il-ʃanqaaḍ* the house has collapsed and there are people under the ruins.

نقاضة *nuqaaḍa* /coll n/ rejects (particularly of vegetables, small miscellaneous consumer items etc.), surplus items.

اتنقض *ʃitnaqaḍ* /vi/ passive of *naqaḍ*. - iva *mitniqiḍ*.

ناقض *naaqiḍ, naaqiḍ*† **1** /vt/ to contradict. *ʃinta*

bi-tnaaqiḍ nafs-ak you're contradicting yourself. **2** /vi/ to raise an objection. - vn *munaqḍa, minaqḍa*; ava *minaaqiḍ*.

اتناقض *ʔitnaaqiḍ, ʔitnaaqiḍ↑* /vi/ **1** to be contradicted. **2a** to stand in mutual contradiction. **2b** to contradict oneself. - iva *mitnaaqiḍ*.

تناقض *tanaaquḍ↑* /n pl *-aat*/ self-contradiction.

متناقض *mutanaaqiḍ↑* /adj */ self-contradictory, incompatible.

ن ق ط

نقط *naqaṭ (u)* /vt/ **1** to cause to suffer a stroke or an attack of apoplexy. **2** to mark with a dot. *noota manquuṭa [mus]* dotted note. - vn *naqṭ, naqaṭaan*; ava *naaqiṭ*; pva *manquuṭ*.

نقطة *nuqṭa* /n pl *nuqaṭ*/ **1a** a drop *nuqṭit mayya* a drop of water. *nuqaṭ bi-tittaaxid fil-buqq* (medicinal) drops to be taken orally. ‖*leelit in-nuqṭa [Copt Chr]* feast of St. Michael the Archangel, who is traditionally believed to put a drop of holy water in the Nile to make it rise (12th of the month Abib). **1b** spot, dot. **2** point (in space). *nuqṭit il-bidaaya* the starting point. **3** point (e.g., in an argument). *ʔana msallim bin-nuqṭa di* I accept that point. *di nuqṭa ɛayza munaqʃa* this is a point that needs discussion. **4** score point. *faaz bin-nuqaṭ* he won on points. **5** station, post. *nuqṭit maṭaafi* fire-station. *nuqṭit buliiṣ* rural police post. **6** motif in tent appliqué designs (see Pl.H,. 16). — /no pl/ **7a** money given as a present to, e.g., a child at birth or circumcision, or a bride or groom at a wedding. **7b** money given to a musician or dancer while performing (as largesse or in payment for complimentary toasts called by the leader of a band). **8** stroke, attack of apoplexy.

نقوطة *nuquuṭa = nuqṭa*.

نقيطة *nuqeeṭa* /n/ batter of flour and eggs with which vegetables are coated before frying.

نقّاطة *naqqaaṭa* /n/ drip-feed apparatus.

أنقط *ʔanqaṭ* /adj, fem *naqṭa*, pl *nuqṭ*/ speckled, spotted.

انتقط *ʔitnaqaṭ* /vi/ **1** to have a stroke, suffer an attack of apoplexy. **2** to be dotted. - iva *mitniqiṭ*.

نقّط *naqqaṭ* /vt/ **1** to spot, cover with spots. *ʔarḍiyya mnaqqaṭa* a spotted background. *ʔil-ḥaṣba naqqaṭit wiff-i* the measles brought my face out in spots. **2** to present with (a gift of) money (cf. *nuqṭa* 7). ‖*naqqaṭ-na b-sukaat-ak* be so good as to shut up! (e.g., to one who says something stupid). — /vi/ **3** to drip. *bi-niddii-ha stubba ɛaʃaan ma-tnaqqaṭ-ʃ* we caulk it with oakum so that it won't drip. ‖*buqq-ak bi-ynaqqaṭ ɛasal* your words are sweet as honey. **4** to give (presents of) money (cf. *nuqṭa* 7). - vn *tanqiiṭ*; ava/pva *minaqqaṭ*.

اتنقّط *ʔitnaqqaṭ* /vi/ passive of *naqqaṭ*. - iva *mitnaqqaṭ*.

ن ق ع

نقع *naqaɛ (a)* /vt/ **1** to steep, soak. **2** to leak, allow to seep. *ʔiz-ziir naqaɛ il-mayya kull-a-ha* the water-jar leaked out all the water. — /vi/ **3** to leak, seep. *ʔin-naṭara naqaɛit mis-saqf* the rain seeped through the ceiling. - vn *naqɛ, naqaɛaan*; ava *naaqiɛ*; pva *manquuɛ*.

منقوع *manquuɛ* /n/ drink made by soaking dry ingredient(s) in water. *manquuɛ il-ɛirq[i] suus* liquorice drink. ‖*manquuɛ iṣ-ṣuraṃ* (or *il-baraṭiiʃ*) a horrible drink.

نقعة *naqɛa* /pl *-aat*/ instance noun of *naqɛ*. ‖ *ʔabu naqɛa [abus]* bed-wetter.

انتقع *ʔitnaqaɛ* /vi/ to be steeped, be soaked. - iva *mitniqiɛ*.

مستنقع *mustanqaɛ, mustanqaɛ* /n pl *-aat, -aat*/ swamp.

ن ق ق

نقّ *naqq (u)* /vi/ **1** to nag. *miraat-i bi-tnuqq[a] ɛalayya kull[i] yoom ɛaʃaan ʃaftiri ɛarabiyya* my wife nags at me every day to buy a car. **2** to talk incessantly and enviously (thus causing the object of comment misfortune). *ɛaɛadu ynuqqu ɛalee l-ḥadd[i] ma xisir kull illi ɛandu* they went on about how well-off he was till everything he had was lost. - vn *naqq, naqaqaan*; ava *naaqiq*; pva *manquuq*.

نقّاق *naqqaaq* /n */ **1** nagger. **2** one who by his incessant envious talk brings misfortune on the object of his comment.

اتنقّ *ʔitnaqq* /vi/ (impersonal) passive of *naqq*. *m-aḥibb[i]-ʃ ʃaakul il-ʃakl il-mitnaqq[a] ɛalee* I don't like to eat food other people have had their eyes on. - iva *mitnaqq*.

ن ق ل

نقل *naqal (i)* /vt/ **1** to convey from one place to another, transport. *ʔil-ʃutubisaat bi-tinqil iṭ-ṭalaba lil-madaaris* the buses transport the students to school. *naqaluu-ni lil-ʃisbitalya* they transferred me to the hospital. ‖*naql[i] damm* blood transfusion. **2** to transfer. *laazim yiftaval fir-riif mudda qabl[i] ma yirḍu yinqiluu maṣr* he must work for a (certain) period in a rural area before they will agree to transfer him to Cairo. **3** to copy, make a copy of. *naql[i] ṣafḥa min ik-kitaab bi-yfiid*

il-ʕaṭfaal fi-taḥsiin il-xaṭṭ copying a page from the book helps the children to improve their handwriting. *bi-ninqil in-nusxa l-ʕaṣliyya ɛala friiṭ faaḍi* we make a copy of the original on a blank tape. — /vi/ **4** *[auto]* to change gear. *laazim tiɛraf tinqil kiwayyis qabl*^{i} *ma tsuuq fiz-zaḥma* you have to be good at changing gear before you drive in heavy traffic. - vn *naql, naqalaan*; ava *naaqil*; pva *manquul*.

نقل *naql* /n/ **1** transportation. *naql barri* overland transportation. ‖*ɛarabiyya nuṣṣ*^{i} *naql* pick-up truck, small open truck. **2** transfer. *lamma yiwaafiq il-mudiir ḥa-ygii-lak in-naql*^{a} *ɛala ṭuul* when the manager gives his approval you'll get (notice of) your transfer straight away. **3** *[auto]* transmission. *naql*^{i} *ʔutumatiiki* automatic transmission.

نقلة *naqla* /pl *-aat*/ **1** instance noun of *naql*. **2** load. *ʔin-naqla tqiila ɛalee* the load is too heavy for him. **3** gear, speed. *ɛarabiyt-i talat naqlaat miʃ ʔarbaɛa* my car has three speeds not four.

نقل *nuql* /coll n/ mixed nut(s).

نقّالة *naqqaala* /n pl *-aat*/ stretcher (for carrying the sick).

نقّالى *naqqaali* /adj invar/ movable, portable, mobile.

نقّاليّة *naqqaliyya* /n pl *-aat*/ shallow basket of withies for bread (resembling a *miʃanna* - see Pl.B. 9 - but smaller).

منقلة *manqala* /n pl *manaaqil*/ protractor.

اتنقل *ʔitnaqal* /vi/ **1** to be conveyed, be transported. *ʔitnaqalit min il-beet lil-mustaʃfa* she was taken from the house to the hospital. **2** to be transferred. *ʔil-maktab itnaqal li-skindiriyya* the office was moved to Alexandria. ‖ *ʔil-maḥkama tnaqalit* the court formally moved the site of the hearing. **3** to be copied. **4** to convey oneself, proceed. *nitniqil lin-nuqṭa l-ʔaxiira* let's move on to the last point. *ma-kanuu-ʃ bi-yitniqlu xaṭwa ʔilla baɛd*^{i} *ma yidrisu ṭ-ṭariiq* they would not take a step till they had studied the path. **5** *[auto]* to be changed (of gears). - ava/iva *mitniqil*.

نقّل *naqqil* **1** /vt/ to transfer repeatedly. *naqqilu k-koora benhum* they passed the ball back and forth between them. *ʔaaxir iʃ-ʃahr*^{i} *nruuḥ minaqqiliin iʃ-ʃatl*^{i} *f-qaṣaari* at the end of the month we transplant the seedlings into pots. **2** /vi/ to be at the elementary stages (in learning s.th.). *lissa bi-ynaqqil fil-qiraaya* he's still very much a beginner in reading. - vn *tanqiil*; ava *minaqqil*.

اتنقّل *ʔitnaqqil* /vi/ to be transferred or transfer oneself repeatedly, be moved or move oneself from place to place. - vn *tanaqqul*; ava/iva *mitnaqqil*.

تنقّل *tanaqqul*$^{\uparrow}$, *tanaqqul*$^{\uparrow}$ /n pl *-aat*/ transfer, transference.

متنقّل *mitnaqqil, mutanaqqil*$^{\uparrow}$ /adj/ movable, portable. *ṭarabezaat mitnaqqila* movable tables, trestle tables.

انتقل *ʔintaqal* = *ʔitnaqal*. ‖*ʔintaqal* (or *ʔintaqal) li-raḥmit illaah [euphem]* he passed on to (rest in) God's mercy, he died. - vn *ʔintiqaal*; ava *mintiqil*.

ن ق م

نقم *naqam (i): naqam ɛala* /vi/ to feel angry with. *naqamt*^{a} *ɛad-dinya kull-a-ha* I felt bitter against the whole world. - vn *naqamaan*; ava *naqim, naaqim*.

ناقم *naaqim*$^{\uparrow}$ /adj */ vengeful, spiteful, bitter. *raagil naaqim ɛad-dunya* a man who is bitter about life.

نقمة *naqma* /n pl *niqam*/ calamity, disaster. ‖*gat-ak in-niqam* ≈ go to hell! - *ʔir-raagil da naqma* the man's a plague!

انتقم *ʔintaqam* /vi/ to take revenge. *ʔintaqamt*^{i} *l-faraf-i* I avenged my honour. ‖*rabb-i-na yintiqim minnu* ≈ may our Lord punish him! - vn *ʔintiqaam*; ava *mintiqim*.

ن ق ن ق

نقنق *naqnaq* /vi/ to eat sparingly, pick or nibble at one's food. - vn *naqnaqa*; ava *minaqnaq*.

ن ق و see ن ق ى [1] : *naqaawa*

ن ق و ر

نقورة *naqwara* /n/ mockery, ridicule. ‖ *ʔakl*^{i} *w-naqwara [prov]* eating (at someone's table) and then mocking (their kindness), biting the hand that feeds one.

انتقور *ʔitnaqwar* /vi/ to indulge in mockery or ridicule. *ʔin-naas yitnaqwaru ɛalayya wi-yquulu mɛaqqad* people ridicule me and say I have complexes. - /also (impersonal) passive constructions/ *miʃ ʔana lli yitnaqwar ɛalee* I am not to be ridiculed. - ava/iva *mitnaqwar*.

ن ق ى [1]

نقى *naqi, naqi* /adj/ pure, unadulterated. *sibirtu naqi* pure spirits.

نقاوة *naqaawa* **1** /adj invar/ select, choice. *manga naqaawa* hand-picked mangoes. *naas naqaawa* (a) select (group of) people. **2** /vn/ selection, choice, pick. *naqaawit ɛeen-i* ≈ specially selected (i.e. by the merchant), as in *ya ṭamaaṭim ya gawaahir ya naqaawit ɛeen-i [vendor's cry]* ≈ wonderful tomatoes, personally selected! *ɛala naqawt-ak* as you personally choose, as in *ɛayziin ya rayyis kaam mangaaya kida bass*^{i} *ykuunu*

ɛala naqawt-ak we want a few mangoes, but we rely on you to pick out some really nice ones.

نقّى *naqqa* /vt/ **1** to select. *ruḥt[i] lil-ɛagalaati w-naqqeet ɛagala kwayyisa* I went to the bicycle man and picked out a good bike. **2a** to pick over and clean. *bi-tnaqqi r-ruzz* she picks over the rice and removes the grit etc. **2b** to pick out (impurities), remove (impurities). *bi-nnaqqi l-qaʃʃ[i] w-yifḍal il-ḥabb* we pick out the straw and the grain is left. **3** to purify. *ʃif-fabba tidxul fi-baɛḍ[i] maraaḥil tanqiyyit il-mayya* alum is used in some stages of water purification. - vn *tanqiyya*; ava/pva *minaqqi*.

منقّى *minaqqi* /adj/ choice. *quuṭa mnaqqiyya* choice tomatoes. ‖*gat-lu ruṣaaṣa mnaqqiyya* he was hit by a bullet with his name on it. - *muṣiiba mnaqqiya* a terrible disaster. - *gaa-li suʃaal minaqqi fil-imtiḥaan* I got a fantastic question in the exam.

اتنقّى *ʃitnaqqa* /vi/ **1** to be selected. **2a** to be picked over and cleaned. **2b** to be picked out (of impurities), be removed (of impurities). **3** to be purified. - iva *mitnaqqi*.

ن ق ى [2]

نقى *naqa* /coll n/ **1** pip(s), pit(s), kernel(s). **2** *[carp]* knots in wood (in the jargon of carpenters engaged in *maʃrafiyya* work).

نقاية *naqaaya* /unit n, pl *-aat*/ **1** a pip, a pit, a kernel. **2** *[carp]* a knot in wood (cf. *naqa*).

ن ك ت [1]

نكت *nakat[1] (u)* /vt/ **1** to insert or remove (s.th.) thus making a hole. *nakatt il-watad fir-raml* I drove the peg into the sand. *nakatt il-watad mir-raml* I pulled the peg out of the sand. **2** to deal (s.o.) a blow. - vn *nakt, nakataan*; ava *naakit*; pva *mankuut*.

نكتة *nakta[1]* /pl *-aat*/ instance noun of *nakt*.

اتنكت *ʃitnakat[1]* /vi/ passive of *nakat[1]*. - iva *mitnikit*.

نكتة *nukta* /n pl *nukat*/ joke. ‖*ʃibn[i] nukta* one fond of (telling and hearing) jokes.

نكتى *nukati* /adj pl *-yya*/ given to making jokes, witty.

منكات *minkaat* /n pl *manakiit, manaakit*/ fine probe.

نكّت *nakkit* /vi/ to tell jokes. *qaɛadna nnakkit wi-nidḥak lamma kunna ḥa-nsooraq min id-diḥk* we went on telling jokes and laughing till we were almost fainting from laughter. - vn *tankiit*; ava *minakkit*.

اتنكّت *ʃitnakkit* /vi/ (impersonal) passive of *nakkit*. *ʃitnakkit ɛalee* he was the object of jokes. - iva *mitnakkit*.

ن ك ت [2]

نكت *nakat[2] (u)* /vt/ **1** to dishevel, make a mess of. *daxalu l-ḥaramiyya nakatu ʃ-ʃaqqa min fooq li-taḥt* the burglars came in and turned the flat upside down. ‖*ḥara w-nakat* ≈ to eat one's heart out with frustration, boil inwardly. **2** to shuffle (cards). - vn *nakt, nakataan*; ava *naakit*; pva *mankuut*.

نكتة *nakta[2]* /pl *-aat*/ instance noun of *nakt*.

اتنكت *ʃitnakat[2]* /vi/ passive of *nakat[2]*. - iva *mitnikit*.

ن ك ح

نكح *nakaḥ (a)* /vt/ **1**↑ to marry, get married to (a woman). **2**↓ *[coarse]* to copulate with, lay (a woman). *mara mankuuḥa* a harlot. - vn *nikaaḥ*; ava *naakiḥ*; pva *mankuuḥ*.

اتنكح *ʃitnakaḥ* /vi/ passive of *nakaḥ*. - iva *mitnikiḥ*.

استنكح *ʃistankaḥ* /vi/ *[abus]* to throw one's weight around. ‖*mara mistankaḥa* a slut. - vn *ʃistinkaaḥ*; ava *mistankaḥ*.

ن ك د

نكد *nakad* /n/ torment, unhappiness, misery. *gaa-k nakad* may you be miserable! *ḥayat-ha nakad wi-hamm* her life is all misery and worry.

نكدى *nukadi* /adj * and pl *-yya*/ **1** miserable by nature. **2** oppressive, pernicious.

منكود *mankuud* /n pl *manakiid*/ wretch, scoundrel.

نكّد *nakkid* /vt/ **1** to annoy, irritate, put into a foul mood. **2** to make (s.o.'s life) a misery. *gooz-i mnakkid ɛalayya ɛiʃt-i ɛaʃaan ɛaawiz waad* my husband makes my life a misery because he wants a son. *ʃilaah-i ynakkid ɛaleek* God make your life a misery! - vn *tankiid*; ava/pva *minakkid*.

اتنكّد *ʃitnakkid* /vi/ to become or be made annoyed and miserable, become or be made depressed and irritable. - ava/iva *mitnakkid*.

ن ك ر

نكر *nakar (i)* /vt/ to deny, repudiate. *miin yinkir faḍl it-taɛliim* who would deny the benefit of education? *nakar gawaaz-u* he repudiated his marriage. ‖*nakar gimiil* to behave ungratefully. - vn *nukraan, nakaraan, nukraniyya*; ava *naakir*; pva *mankuur*.

ناكر *naakir* /prop n/: *naakir* (or *munkar) wi-nakiir* two angels who, according to Muslim popular belief, visit the dead upon their burial and question them severely on their faith. ‖*ɛaamil zayy[i] naakir wi-nakiir* constantly objecting.

نكرة *nakra* /n pl *-aat*/ a denial.

نكرة *nakira* /pl *-aat*/ **1** /adj/ unimportant, nondescript. **2** /n/ *[gram]* indefinite noun.
أنكر *ʔankar*[1]↑ /el/ more/most unpleasant . or objectionable.
نكير *nakiir* /prop n/: *naakir wi-nakiir* see *naakir*.
اتنكّر *ʔitnakkar* /vi/ to affect a disguise. - vn *tanakkur*; ava *mitnakkar*.
¶ *ʔitnakkar li-* to turn one's back on. *ʔitnakkar li-xwaat-u* he abandoned his brothers and sisters.
تنكّري *tanakkuri* /adj/ pertaining to disguise. *ḥafl*[i] *tanakkuri* or *ḥafla tanakkuriyya* fancy-dress party, masquerade.
أنكر *ʔankar*[2]↑ = *nakar*. - vn *ʔinkaar*; ava *munkir*; pva *munkar*.
منكر *munkar* /adj/ **1** abominable (especially in religious terms). **2** *munkar* (or *naakir*) *wi-nakiir* see *naakir*. — *munkaraat* /pl n/ **3** abominations.
استنكر *ʔistankar*↑ /vt/ to declare one's disapproval of. - vn *ʔistinkaar*; ava *mustankir*.

ن ك ر ى ز

نكريز *nakriiz* <T *nikriz*> /n/ *[mus]* mode in Arabic music beginning on C and having E flat, F sharp and B flat.

ن ك س

نكس *nakas (i)* /vt/ **1** to cause to relapse (into sickness). **2** to cause a setback (of fortune) to. - vn *naks, nakasaan*; ava *naakis*; pva *mankuus*.
نكسة *naksa* /inst n, pl *-aat*/ **1** a relapse (into sickness). **2** a setback, a reversal (of fortune). ‖ *ʔin-naksa* the Egyptian defeat of June 1967.
إنكيس *ʔinkiis* /n/ bad luck. *nigm-u dayman fil-ʔinkiis* he's always unlucky.
اتنكس *ʔitnakas* /vi/ **1** to suffer a relapse (into sickness). **2** to suffer a setback or reversal (of fortune). - iva *mitnikis*.
نكّس *nakkis* /vt/ **1** to keep low. *minakkis raas-u mil-kusuuf* he's hanging his head with shame. *leeh minakkisiin il-ɛalam* why are they flying the flag at half-mast? **2** to repair (a wall) by replacing crumbled masonry. - vn *tankiis*; ava/pva *minakkis*.
اتنكّس *ʔitnakkis* /vi/ passive of *nakkis*. - iva *mitnakkis*.

ن ك ش

نكش *nakaʃ (u)* **1** /vt/ to put into disarray, mess up. *nakʃaʃ ʃaɛr-i* he ruffled my hair, he messed up my hair. *baɛd*[i] *m-arattib il-hiduum gayy*[i] *tinkuʃ-ha* you come and scatter the clothes around after I've arranged them neatly? **2** to provoke, stir up (e.g., anger). — /vi/ **3** to to scratch about, scrabble. *ma-tunkuʃ-ʃ*[i] *f-manaxiir-ak* don't keep picking your nose! *nakaʃt*[i] *fit-turaab ʔadawwar ɛat-taɛriifa* I scrabbled about in the dust searching for the half-piastre. ‖ *dayman yinkuʃ waraaya* he's always trying to make trouble for me (by picking holes in my work). - vn *nakʃ, nakaʃaan*; ava *naakiʃ*; pva *mankuuʃ*.
نكشة *nakʃa* /pl *-aat*/ instance noun of *nakʃ*.
اتنكش *ʔitnakaʃ* /vi/ passive of *nakaʃ*. - iva *mitnikiʃ*.

ن ك ف

نكفي *nakafi: ʔil-ɣudda n-nakafiyya* parotid gland.
ناكف *naakif* /vt/ to tease, needle, pester. *ṭuul in-nahaar bi-ynaakif ʔuxt-u* all day long he's getting at his sister. - vn *minakfa*; ava *minaakif*.
اتناكف *ʔitnaakif* /vi/ **1** to tease one another, needle one another, pester one another. **2** to be teased. - ava/iva *mitnaakif*.
استنكف *ʔistankif* /vi/ to disdain, consider beneath one's dignity. *ʔistankif yigiib li-ʔaxuu mayya yifrab* he resented having to bring water for his brother to drink. - iva *mistankif*.

ن ك ل [1]

نكّل *nakkil*[1]↑: *nakkil bi-* /vi/ to maltreat, harm. - vn *tankiil*; ava *minakkil*; pva *munakkal*.
اتنكّل *ʔitnakkil*[1]: *ʔitnakkil bi-* /vi/ (impersonal) passive of *nakkil*[1]. *leeh yitnakkil bii kida* why should he be maltreated in this way? - iva *mitnakkil*.

ن ك ل [2]

نيكل *neekal* <perh Fr *nickel*> /n/ **1** nickel. **2** /pl *nawaakil*/ metal marble.
نيكلة *nikla* /unit n, pl *nikal, niklaat, nakaayil*/ *[obsol]* two millimes, two-millime piece. *ma-ɛandii-ʃ nikla* I'm penniless. ‖ *ʔabu nikla* cheap and shoddy. - *raaḥ f-abu nikla* to come to nothing.
نكّل *nakkil*[2] /vt/ to coat with nickel, chrome-plate. - vn *tankiil*; ava/pva *minakkil*.
اتنكّل *ʔitnakkil*[2] /vi/ passive of *nakkil*. - iva *mitnakkil*.

ن ك ه

نكهة *nakha* /n pl *-aat*/ flavour, aroma.

ن ل و ن

نولون *nuloon* (also *nawluun*) <Gr *naulon*> /n/ freight charges.

ن ل ى see [1] م ل ى : *ʔintala*

ن م
نم *nim* <P *nîm*> /n/ *[mus]* quarter sharp.

ن م ر [1]
نمرة *nimra* <It *numero*> /n pl *nimar*/ **1a** number. ‖*nimra rabḥa* winning number, commercial success, hit with the public. -*nimar yanaṣiib* lottery tickets. **1b** score, grade, mark. *xadt[i] nimra kwayyisa fil-ḥisaab* I got a good mark in maths. **2a** number, turn (in a show). ‖*da-nta nimra* ≈ you're a real character! -*nimra ɑarɛa* (1) an old trick, a feeble trick. (2) a disappointing failure. **2b** trick, wile.
نمّار *nammaar: xitm[i] nammaar* number stamp, stamp for stamping serial numbers (e.g., on cheques).
نمّارة *nammaara* /n pl *-aat*/ numbering machine.
نمّر *nammar[1]* /vt/ to number, give a number to. -vn *tanmiir*; ava/pva *minammar*.
اتنمّر *ʔitnammar[1]* /vi/ to be numbered, be given a number. -iva *mitnammar*.

ن م ر [2]
نمر *nimr* /n pl *nimuur, numuur, numúra*/ tiger.
نمّر *nammar[2]* /vi/ **1** to set one's sights (on s.th.). *ʔana mnammar ɛala faqqa f-maṣr ig-gidiida ḥa-tifḍa ɑrayyib* I have my eyes on a flat in Heliopolis that will soon be vacated. **2** to crouch and be ready to pounce, stand in readiness. *ʔana mnammar-lu* I'm just waiting for a chance to catch him. -vn *tanmiir*; ava *minammar*.
اتنمّر *ʔitnammar[2]* = *nammar[2]*. -ava *mitnammar*.
استنمّر *ʔistinammar[1]* = *nammar*. -ava *mistinammar*.

ن م ر د
نمرود *namruud, namruud* /adj pl *namarda*/ **1** insolently ungrateful. **2** naughty, mischievous.
نمرد *namrad* /vt/ to make worldly-wise, make aggressive. *maṣr[i] namradit-u* Cairo taught him the ways of the world. -vn *namrada*; ava *minamrad*.
اتنمرد *ʔitnamrad* /vi/ **1** to behave with insolent ingratitude. **2** to become aggressive, behave aggressively. *ʔis-sittaat itnamradu l-ʔayyam-di* ≈ women these days have burnt their bras. -iva *mitnamrad*.

ن م س [1]
نمس *nims* **1** /n pl *numuus, numúsa*/ **1a** ichneumon. **1b** astute person, shrewd person. **2** /coll n/ large, elongated variety of water-melon appearing in two forms: one with a dark green striped skin (*nims[i] ʔaxḍar*), the other with a light green striped skin (*nims[i] ʔabyaḍ*).
نميس *namiis* /adj */ **1** shrewd, astute. **2** cute, appealing.
نميسة *namiisa* /n pl *namaayis*/ *[rur]* broad gold necklace.

ن م س [2]
النمسا *ʔin-nimsa* /prop n/ Austria.
نمساوى *nimsaawi, nimsawi* **1** /adj */ Austrian. **2** /n */ an Austrian.

ن م س [3] see [1] ن م و س: *namuus[1], namuusa, namusaaya, namusiyya*

ن م س [4] see [2] ن م و س: *namuus[2]*

ن م ش
نمش *namaʃ* /coll n/ freckles. *ɛandaha namaʃ fi-wiff-a-ha* she has freckles on her face.
نمشة *namaʃa* /unit n, pl *-aat*/ a freckle.
نمشاية *namaʃaaya* = *namaʃa*.
نمّش *nammiʃ* /vi/ to become freckled. -vn *tanmiiʃ*; ava *minammiʃ*.

ن م ط
نمط *namaṭ* /n pl *ʔanmaaṭ*/ **1** style, pattern. *kull-u-hum nafs in-namaṭ* they're all the same pattern. **2** method, way. *bi-yitɛimlu b-nafs in-namaṭ* they're made the same way.

ن م ك
نمكى *nimaki* /adj * and pl *-yya*/ fussy, finicky, fastidious.

ن م ل
نمل *naml* /coll n/ ant(s).
نملة *namla* /unit n, pl *-aat*/ an ant. *ʔilli tigmaɛ-u n-namla f-sana yaxd-u g-gamal fi-xuff-u [prov]* what the ant collects in a year the camel carries off on a (single) hoof.
نملاية *namlaaya* = *namla*.
نمليّة *namliyya* /n pl *-aat, namaali*/ **1** food-safe. **2** dresser or cupboard with doors.
نمّل *nammil* **1** /vt/ to cause to tingle or have pins and needles. **2** /vi/ to tingle, have pins and needles. *riglay-ya btadu ynammilu* my legs started tingling. -vn *tanmiil*; ava/pva *minammil*.
اتنمّل *ʔitnammil* /vi/ to be made to tingle. -iva *mitnammil*.

ن م م
نمّ *namm (i)* /vi/ to spread scandal, report back to one who is the subject of gossip in order to cause a rift. -vn *namm, namamaan*; ava *naamim*.

نميمة *namiima* /n/ back-biting.
نمّام *nammaam* /n */ scandal-monger.

ن م ن م
نمنم *namnim* /vi/ **1** to mumble, mutter to oneself, talk under one's breath. *baṭṭal namnama* stop muttering! **2** to nibble at food, take very tiny pieces of food. — /vt/ **3** to make tiny. *ma-tnamnim-ʃ il-luqma kida* don't cut the bread in such tiny pieces. - vn *namnama*; ava/pva *minamnim*.
نمنم *nimnim* /adj/ tiny, puny, meagre, very small.
نمنومة *namnuuma* /n pl *-aat, namaniim*/ tiny piece.
نمنومية *namnumaaya* /n pl *-aat*/ = *namnuuma*.
اتنمنم *ʔitnamnim* /vi/ to be made tiny. - iva *mitnamnim*.

ن م و
نمى *nama↑ (u, i)* /vi/ to grow. *namit-lu faʒra f-ṭarṭuufit manaxiir-u* a hair grew on the end of his nose. *ʔil-bilaad in-naamiya* the developing countries. - vn *numuww*; ava *naami*.
تنمية *tanmiya↑* /n/ development. *tanmiya ʔiqtiṣadiyya* economic development.

ن م وذج see ن م وزج

ن م وزج
نموذج *namuuzag* <P *namûdaj*> /n pl *namaazig*/ **1** model. *namuuzag lil-mabna* an (architect's) model of the building. **2** printed form, blank form.
نموذجى *namuuzagi↑* /adj */ model, exemplary. *madaaris namuuzagiyya* model schools.

ن م و س [1]
ناموس *namuus[1]* /coll n/ mosquito(es).
ناموسة *namuusa* /unit n, pl *-aat*/ a mosquito.
نموسية *namusaaya* = *namuusa*.
ناموسيّة *namusiyya* /n pl *-aat*/ mosquito-net. ‖*sagaayir namusiyya* small cigarettes, ladies' cigarettes. - *ʔis-ṣitt[1] fin-namusiyya* Cape gooseberry fruit(s).

ن م و س [2]
ناموس *namuus[2]* /n/ (natural) law. *namuus il-koon↑* the law of the universe.

ن م ى see ن م و : *tanmiya*

ن ن ن ا
ننه *ninna* **1** /interj/ word used to lull a child to sleep. **2** /n/ *[children]* sleep.

ن ن ن و س
ننوس *nannuus* /adj/ cute sweet (of children).

(ن ن ن ى)
نِنى *ninni[1]* /n/ pupil (of the eye). ‖*huwwa zayy[1] ninni ʒenay-ya* he is very dear to me, he is the apple of my eye. - *ḥ-aḥuṭṭ-u f-ninni ʒeen-i* I'll watch over him with loving care.
نِنى *ninni[2]* /n/ little child. *ya ninni [deris]* you cry-baby!

ن ه ء see [1] ن ه ى : *nihaaʔi*

ن ه ب
نهب *nahab (a)* /vt/ to loot, pillage, rob. - vn *nahb, nahabaan*; ava *naahib*; pva *manhuub*.
نهيبة *nihiiba* /n pl *-aat, nahaayib*/ property free for the taking. *ʔif-firka bin-nisba luhum nihiiba w-bass* as far as they're concerned the company is fair game for anybody.
نهّاب *nahhaab* /n pl *nahhaaba*/ looter, pillager, robber.
اتنهب *ʔitnahab* /vi/ to be looted, be pillaged. - iva *mitnihib*.
استنهب *ʔistanhab↓* /vt/ to swindle, rob. *ʔintu ḥa-tistanhabuu-na* are you going to rob us? *di ʒamaliyyit istinhaab* this is sheer robbery. - vn *ʔistinhaab*; ava *mistanhab*.

[1] ن ه ج
نهج *nahag (a)* /vi/ to have difficulty in breathing, gasp for breath, pant. *law mifiit ʔanhag wi-m-aqdar-ʃ aṭlaʒ is-sillim* if I walk I have to fight for breath, and I can't climb stairs. - vn *nahg, nahagaan*; ava *naahig*.

[2] ن ه ج
منهج *manhag* /n pl *manaahig*/ **1↑** *[acad]* curriculum. **2↑** method, procedure. *ʔil-manhag it-tagriibi* the experimental method.

ن ه د
نهد *nahd, nihd* /n pl *nuhuud, nihuud, nuhúda*/ breast. *ʔil-bitt[1] nhud-ha kibrit wi-ʒayza l-ʒariis* the girl's breasts have filled out and it's time for her to find a husband.
نهّد *nahhid* /vi/ to fill out, swell. (of breasts). - vn *tanhiid*; ava/pva *minahhid*.
تنهيد *tanhiid* /vn/ sighing.
تنهيدة *tanhiida* /inst n, pl *-aat, tanahiid*/ a sigh.
اتنهّد *ʔitnahhid* /vi/ to sigh. *fiqlit rayḥa gayya w-titnahhid li-ḥadd[1] ma wiṣil goz-ha* she went on walk-

ing to and fro and sighing till her husband arrived. - ava *mitnahhid*.

ناهد *naahid* /vt/ to nag, pester. *ţuul in-nahaar yinaahid (f-)ixwaat-u ɛaʃaan il-ɛagala* all day long he's nagging his brothers and making trouble over the bicycle. - vn *minahda*; ava *minaahid*.

اتناهد *ʃitnaahid* /vi/ to be nagged, be pestered. - iva *mitnaahid*.

ن ه ر [1]

نهر *nahr*↑ /n pl *ʃanhaar*/ **1** river. *nahr in-niil* the River Nile. **2** column (of print).

نهرى *nahri* /adj */ riverine. *ʃutubiis nahri* river-bus. *ʃil-baḥriyya n-nahriyya* the River Marine Corps.

ن ه ر [2]

نهار *nahaar, nihaar* /n/ day, daytime. *ţuul in-nahaar* all day long. *lamma yiţlaɛ in-nahaar* when day comes. *min nahaar gawaaz-ak* since the day you got married. ‖*ʃin-nahar-da* today. *-diik in-nahaar* the other day. *- nahaar-ak saɛiid* and *nahaar-ak ʃabyaḳ*↓ and *nahaar-ak zayy il-full*↓ etc. conventional daytime greetings ≈ good day! have a nice day! - *ya nhaar ʃiswid* (exclamation of surprise, bewilderment etc.) ≈ good grief! - *nahaar-ak ʃiswid* ≈ you're in real trouble!

¶ *nahaar ma* /conj/ on the day that, when. *nahaar ma tingaḥ tibqa tgii-ni wi-tqul-li ʃinnak ɛaayiz ɛagala* when you pass (your exam), that's when you can come and ask for a bicycle. *faakir nahaar ma zzaḥlaqt[a] ɛas-sillim wil-bitt[i] diḥkit ɛaleek* do you remember the day you slipped on the stairs and the girl laughed at you? *min nahaar ma ɛrift illi ḥaṣal wi-ʃana zaɛlaan* ever since I got to know what happened I've been upset.

ن ه ر ز

نهرز *nahriz* /vt/ to give a hard time to, subject to extreme pressure. *ʃaxuu k-kibiir nahriz-u miḳ-ḳarb[a] ɛaʃaan yitʃaddib* his elder brother gave him a sound beating so that he would mend his manners. - vn *nahraza*; ava/pva *minahriz*.

اتنهرز *ʃitnahriz* /vi/ passive of *nahriz*. - vn *tinahriiz*; ava *mitnahriz*.

ن ه ز

انتهز *ʃintahaz* /vt/ to seize upon (a chance). *ʃintahaz furṣa* to seize an opportunity. - vn *ʃintihaaz*; ava *mintihiz*.

نهّاز *nahhaaz: nahhaaz lil-furaṣ* opportunist.

انتهازى *ʃintihaazi* /n */ opportunist.

ن ه ش

نهش *nahaʃ (a)* /vt/ to bite into, tear off, gnaw at (flesh). ‖*nahaʃ fi-laḥm(-u)* to criticize (s.o.) severely, as in *ʃin-naas bi-tinhaʃ fi-laḥm-i b-sabab-ak* people are pulling me to pieces on your account. - *ɛammaliin yinhaʃu ɛarḳ-u maɛa ʃinnu ṣaaḥib faḍl[a] ɛaleehum* they're slandering him despite what he's done for them. - vn *nahʃ, nahaʃaan*; ava *naahiʃ*; pva *manhuuʃ*.

نهشة *nahʃa* /pl *-aat*/ instance noun of *nahʃ*.

اتنهش *ʃitnahaʃ* /vi/ to be bitten off, be torn off, be gnawed at (of flesh). - iva *mitnihiʃ*.

ن ه ض

نهض *nahaḍ*↑ *(a)* /vi/ to arouse oneself, shake off one's sloth. *ya maṣri ʃirgaɛ li-ɛawayd-ak wi-nhaḍ* Egyptian, return to your old ways and rise again! - vn *nuhuuḍ, nahḍa*; ava *naahiḍ*.

نهض *nihiḍ (a)* **1** /vt/ to catch up with. *nihiḍt-u ɢabl[i] ma yidxul il-beet* I caught (up with) him before he entered the house. **2** /preverb/ to act quickly, do in a hurry. *nihiḍ ţaffa n-naar ɢabl[i] ma timsik fil-ɛaff* he quickly put out the fire before it could get a hold on the furniture. *ʃinhaḍ (taɛaala)* hurry! - vn *nahaḍaan*; ava *naahiḍ*; pva *manhuuḍ*.

نهضة *nahḍa*↑ /n pl *-aat*/ revival, renaissance. *ɛaṣr in-nahḍa* the age of the Renaissance.

نهّض *nahhaḍ* /vt/ to cause to catch up with. - vn *tanhiiḍ*; ava/pva *minahhaḍ*.

اتنهّض *ʃitnahhaḍ* /vi/ passive of *nahhaḍ*. - iva *mitnahhaḍ*.

ناهض *naahiḍ* **1**↑ /vt/ to stand up to, resist. *maṣr[i] bi-tnaahiḍ il-ɛunṣuriyya* Egypt fights racism. **2** /vi/ to cope. *ʃana miʃ ɢaadir ʃanaahiḍ ɛala ţalabaat-u* I cannot cope with his demands. *ʃana ḥ-anaahiḍ ɛala ʃeeh walla ɛala ʃeeh* ≈ how can I cope with all this? - vn *minahḍa*; ava *minaahiḍ*.

اتناهض *ʃitnaahiḍ* /vi/ **1** passive of *naahiḍ* 1. **2** (impersonal) passive of *naahiḍ* 2. *ma-b-yitnahiḍ-ʃ[i] ɛalee fluus* his demands for money can't be coped with. - ava/iva *mitnaahiḍ*.

ن ه ق

نهّق *nahhaɢ* /vi/ to bray (of a donkey). *ḥuţţ il-ḥumaar fi-riiḥ il-baṛṛ in ma kaan yitɛallim ʃahiiɢ-u yitɛallim nihiiɢ-u [prov]* ≈ people are bound to pick up each other's habits. - vn *nihiiɢ, tanhiiɢ*; ava *minahhaɢ*.

اتنهّق *ʃitnahhaɢ* /vi/ (impersonal) passive of *nahhaɢ*. *ʃitnahhaɢ ɛaleeha* she was brayed at. - iva *mitnahhaɢ*.

ن ه م see ل ه م : *ʃanham*

ن ه ن ه

نهنه *nahnah* /vi/ **1** to neigh. **2** to whimper. - vn *nahnaha*; ava *minahnah*.

اتنهنه *ʕitnahnah* /vi/ to whimper. - ava *mitnahnah*.

ن ه و see ن ه ي ¹ : *nahwa*

ن ه و ن د

نهاوند *nahawand* <P *nih-âwand*> /n/ *[mus]* mode in Arabic music starting on C and having E flat, A flat and B flat.

ن ه ي ¹

نهى *naha¹ (i)* /vt/ to finish. *naha f-fuɤl¹ b-surʕa* he finished the work fast. *ʕana ḥ-anhi-lku l-ʕigraʕaat* I'll complete the formalities for you. - vn *nahw*; ava *naahi*; pva *manhi*.

نهوة *nahwa* /pl *-aat*/ instance noun of *nahw*.

منهى *manhi* /adj/ thoroughly cooked.

نهاية *nihaaya* /n pl *-aat*/ end. *fin-nihaaya* in the end, finally. *ʕana ḥaasis ʕinn¹ nhayt-i bi-tqarrab* I feel that my end is approaching. ‖ *nihayt-u* ≈ to cut a long story short.

نهائى *nihaaʕi* **1** /adj/ final. *ʕin-natiiga n-nihaʕiyya* the end result. **2** /adv, always w neg/ at all, whatsoever: *ma-ʕandii-ʃ filuus nihaaʕi* I haven't any money at all. ¶ *nihaʕiyyan* /adv, always w neg/ ever, at all. *ma-ʃuftuu-ʃ nihaʕiyyan* I haven't seen him at all.

متناهى *mutanaahiˆ* /adj/ extreme. *ṣabr¹ mutanaahi* extreme patience.

أنهى *ʕanhaˆ* = *naha¹*. - vn *ʕinhaaʕ*; ava *minhi*.

انتهى *ʕintaha¹* /vi/ **1** to come to an end, finish. *ʕintaha l-faṣl il-ʕawwalaani* the first act came to an end. *ʃahiyyit-i lil-ʕakl intahit* my appetite is gone. **2** to die. - vn *ʕintihaaʕˆ*; ava *mintihi*.

¶ *ʕintaha minˆ* to have done with.

منتهى *muntaha* /n in constr/ the extreme of, the ultimate of. *fi-muntaha g-gamaal* extremely beautiful. *bi-muntaha d-diqqa* with extreme precision.

ن ه ي ²

نهى *naha²ˆ (i, a)* /vt/ to prohibit. *ʕid-diin bi-yinhii-na ʕan iz-zina* religion prohibits us from adultery. - vn *nahy, nahayaan*; ava *naahi*; pva *manhi*.

انتهى *ʕintaha²* /vi/ to desist (from doing s.th.), comply with a prohibition. *ʕintaha ʕan ik-kidb* he stopped lying. - vn *ʕintiha*; ava *mintihi*.

ن و ا

نوا *nawa¹* <P *nawâ*> /n/ *[mus]* name given to the note G above middle C. ‖ *nawa ʕasar* mode in Arabic music starting on C and having E flat, F sharp and A flat.

ن و ا ر

نوار *nawaar* <Fr *noire*> /n/ *[mus]* crotchet, quarter note.

ن و ب ¹

ناب *naab² (u)* /vt/ **1** it profited (s.o.). *ma-nab-nii-ʃ min musaʕdit-u liyya ʕilla ʕaṭala* his help brought me nothing but delay. *la nab-ni fuɤl¹ wala ʕakl* I got neither work nor food. *ma-nab-nii-ʃ minnu ḥaaga ɤeer it-taʕab* I got nothing but trouble from him. ‖ *yinuub-ak sawaab* may you be rewarded (by God). **2** to befall (usually of trouble). ‖ *ʕilli ṣaab-u w-naab-u* the troubles that befell him. - vn *noob, niyaaba*; ava *naayib*.

¶ *naab ʕan* to take the place of. *ʕil-bilastik mumkin yinuub ʕan il-xaʃab* plastic can be used in place of wood. *ʕil-wakiil yinuub ʕan ir-raʕiis fi-ɤyaab-u* the deputy stands in for the president when he's absent.

نوبة *nooba* /n pl *-aat*/ **1** time, occasion. *kamaan nooba* one more time. *ʕin-nooba lli faatit* last time. *gat saliima n-nobaa-di* it turned out all right this time. *baqit tiruuḥ kull¹ yoom nobteen* she took to going twice a day. **2** bout, fit (of illness). *noobit ʕinfilwinza* a bout of influenza. *nooba qalbiyya* a heart attack. **3** shift, turn. *noobit ḥiraasa* guard duty. **4** *[mil]* trumpet call. *noobit ṣaḥayaan* reveille.

نوبتشى، نوبتجى *nabatʃi, nobatʃi* <T *nöbetçi*> /n pl *-yya*/ one on duty, one taking a shift. *ʒaabiṭ nobatʃi* officer on duty.

نيابة *niyaaba* /n/ office of a public attorney, office of a public prosecutor. *wakiil niyaaba* public attorney, public prosecutor. ‖ *niyaaba ʕidariyya* department within a government ministry responsible for the investigation of serious offences.

نايب، نائب *naayib¹, naaʕibˆ* /n pl *nuwwaab*/ **1** representative, deputy. *naaʕib waziir* deputy minister. ‖ *maglis in-nuwwaab [obsol]* the House of Representatives (the lower house of the Egyptian parliament before 1952). - *ʕin-naayib il-ʕaam* the attorney general. **2** *[med]* houseman.

نايب *naayib²* /n pl *nawaayib*/ share, portion. *ʕil-ɤaayib ma-luu-ʃ naayib [prov]* ≈ out of sight out of mind.

نايب *naayib³: xaayib wi-naayib* a dead loss, a good-for-nothing.

نائبة *nayba* /n pl *-aat, nawaayib*/ disaster, calamity. *gat-u nayba - kull¹ fuɤl-u baayiʒ* ≈ the hell with him, all his work is lousy.

منات *manaabˌ* /n pl *-aat*/ share, portion. *ʕinta kalt[a]*

ʕalayya manaab-i you've eaten my share! ‖ *ʔil-quṭṭa taakul manaab-u* (he's so tame and helpless that) a cat can eat his share (of meat without his being able to stop her).

نوّب *nawwib* /vt/ to depute, appoint as a deputy or representative. *ʔana nawwibt-u ʕanni f-ṣarf il-mukafʔa* I have given him authority to cash the bonus on my behalf. - vn *tanwiib*; ava/pva *minawwib*.

اتنوّب *ʔitnawwib* /vi/ to be deputed, be appointed deputy or representative. - iva *mitnawwib*.

ناوب *naawib* /vi/ to take alternative shifts. *ninaawib maʕa baʕḍ[i] fiʔ-ʃuɣl* we should take alternate turns at the work. - vn *minawba*; ava *minaawib*.

مناوبة *minawba* /n pl *-aat/ [rur]* period when irrigation canals are filled (being a part of the irrigation cycle).

مناوب *minaawib* /adj */ on duty. *ʔiẓ-ẓaabiṭ il-minaawib* the duty officer.

اتناوب *ʔitnaawib* /vt/ to take alternative turns (at). *fii talat wardiyyaat bi-yitnawbu (fi)ʃ-ʃuɣl* there are three rotating work shifts. - vn *tanaawub*; ava *mitnaawib*.

أناب *ʔanaab* = *nawwib. miin ʔanaab-ak* who's given you the right to be a deputy? - vn *ʔinaaba*; ava *muniib*.

انتاب *ʔintaabˆ* /vt/ to befall, afflict. *ʔintaab-u maraḍ* he was stricken with a disease. - vn *ʔintiyaab*; ava/iva *mintaab*.

ن و ب [2]

النوبة *ʔin-nuuba* /prop n/ Nubia.

نوبي *nuubi* **1** /adj */ Nubian. **2** /n */ a Nubian. **3** /n, no pl/ the Nubian language.

ن و ب [3] see ن ا ب : *naab[1]*

ن و ت

نوت *nuuta, noota* <It *nota*> /n pl *-aat, niwat/* **1** notebook, note pad. ‖ *ʕan-nuuta* on tick, on credit, as in *bi-yiʃtiru ʕan-nuuta* they buy on tick. **2** *[mus]* **2a** note. **2b** written music.

ن و ج

نوجة *nooga, nuuga* <Fr> /n pl *-aat/* nougat.

ن و ح

ناح *naaḥ[1] (u)* /vi/ to wail, lament. *kutr in-nooḥ yiʕallim il-buka [prov]* much lamentation gets one into the habit of weeping. - vn *nooḥ*; ava *naayiḥ*.

مناحة *manaaḥa* /n/ place of wailing, place of lamentation.

نوّح *nawwaḥ* /vi/ to wail or lament repeatedly. - vn *tanwiiḥ*; ava *minawwaḥ*.

ن و خ

مناخ *manaaxˆ* /n/ climate (physical and metaphorical). *manaax il-balad* the climate of the country. *ʔil-manaax il-fikri* the intellectual climate.

ن و ر [1]

نار *naar* /fem n, pl *niraanˆ*/ **1** fire. *wallaʕ in-naar* light the fire. *lamma l-laban yifuur ʔibʕid-u ʕan in-naar* when the milk boils, remove it from the heat. ‖ *mayyit naar* any strong acid (notably nitric acid). - *ḥagar naar* grindstone. - *naar-u ḥamya* (1) he is furious. (2) he is very active. - *been nareen* in a dilemma. - *(da) naar ʕala ʕalam* he's very famous, he's known everywhere. - *ʕaaʕid ʕala naar* very anxious, like a cat on hot bricks. - *ʔaah ya naar-i* how furious I am, as in *ʔaah ya naar-i mil-bitt* how furious I am with the girl! *ʔaah ya naar-i law kunt[i] ʔaʕdar ʔaʕuul lil-baaʃa ʔaddib ʔawlaad-ak* I really would have given the Pasha a piece of my mind had I been able to tell him, 'Discipline your children'. — *ʔin-naar* /no pl/ **2** firing, shooting. *xaṭṭ in-naar* the line of fire, the battle front. *ḍarab* (or *ʔaṭlaʕ) naar* to fire, shoot. **3** hellfire, Hell. *ʔin-naar wala l-ʕaar [prov]* ≈ death before dishonour. *xaduu-ni min id-daar lin-naar [prov]* they took me from (the comforts of) home to Hell (e.g., to prison). *naar-u wala gannit ɣeer-u [prov]* Hell with him is better than Heaven with another. — /adv/ **4** extremely (hot). *ʔig-gaww[i] suxn[i] naar* the weather is terribly hot. ‖ *ɣaali naar* very expensive.

نارى *naari* /adj/ **1** pertaining to fire, fiery. **2** pertaining to shooting. *ʔasliḥa nariyya* firearms.

نور *nuur* /n pl *ʔanwaar/* **1** light. *ʔiʕra fin-nuur ʕaʃaan ma-tbawwaẓ-ʃ[i] ʕnee-k* read in the light so as not to ruin your eyes. ‖ *ʕaleek nuur* ≈ bravo! well done! - *ya nuur ʕenay-ya* O light of my eyes! (exclamation of affection). - *kaamil in-nuur* Full of Light (epithet of the Prophet Muhammad). - *ya nuur in-nabi* O light of the Prophet! (an exclamation of delight). - *ṣabaaḥ in-nuur* and *masaaʔ in-nuur* response to any of the conventional morning or evening greetings ≈ good morning (to you)! good evening (to you)! - *sabt in-nuur [Chr]* Holy Saturday. - *ma-ʃufnaa-k ya nuur ʔilla lamma txazzaʕit il-ʕiyuun [prov]* we didn't see you, O light, till after the eyes had been put out (of something that comes only after great trouble and then too late). **2** lighting, (loosely) electricity. *ʔin-nuur ʕas-saakin* lighting is payable by the tenant. *ʔil-ʔasanseer miʃ faɣɣaal ʕaʃaan ma-fii-ʃ nuur* the lift isn't working because there isn't any electricity.

نورة *nuura* /n pl *-aat*/ = *nawwaara*.
نوراني *nuraani* /adj/ radiant.
نورانيّة *nuraniyya* /n/ radiance. *wiff-u ɛalee nuraniyya min yoom ma ḥagg* his face has acquired a radiance since the time he went on the pilgrimage.
نيّر *nayyir, niyyir* /adj/ *[fig]* luminous, light-giving. *ya salaam ɛaleek wi-ɛala ʔafkaar-ak in-nayyira [joc]* ≈ my! what bright ideas you have!
نوّار *nawwaar* /coll n/ blossom(s).
نوّارة *nawwaara* /unit n, pl *-aat*/ a blossom. ‖*ya nawwaara* flirtatious form of address to a girl.
أنور *ʔanwar* /el/ more/most bright, luminous or shining.

منور *manwar* /n pl *manaawir*/ light shaft (e.g., such as is found in the centre of a block of flats).
منارة *manaara* /n pl *-aat, manaayir*/ **1** lighthouse. **2** *[Chr]* church steeple, bell tower.
نوّر *nawwar* /vt/ **1a** to give light (to), shine (upon). *nawwar il-ʔooḍa* turn the light on in the room! *nawwart-i-lu fa-ddaa-li ṭ-ṭariiq* I flashed my lights at him so he gave me the road. *ʔil-ʔabajuura mnawwara f-wiff-i* the lamp is shining in my face. ‖*nawwart* and *nawwart il-beet* and *nawwart*^{i} *ḥittit-na* you have brought light (to the house, to our neighbourhood etc.) (conventional compliments to a guest). - *ʔallaah yinawwar (ɛaleek)* ≈ well done! thank you! **1b** to enlighten. *baqaa-li talat siniin laayiṣ mif laaqi ḥadd*^{i} *ynawwar-ni* I've been three years at a loss and found no one to put me straight. — /vi/ **2** to give light. *fii ḍooʔ nawwar min biɛiid* a light shone from a distance. *ʔil-lamba di bi-tnawwar* this bulb is in working order. **3** to blossom. *ʔif-ʃatla kibrit wi-nawwarit* the seedling grew and flowered. - vn *tanwiir*; ava/pva *minawwar*.
اتنوّر *ʔitnawwar* /vi/ **1** to be lit up, be illuminated. **2** to be enlightened. - iva *mitnawwar*.
استنور *ʔistanwar* /vt/ to select for brightness or light. *ʔistanwar-lak makaan tiqra fii* find a well-lit area where you can read. - ava *mistanwar*.
استنار *ʔistanaar: ʔistanaar bi-* /vi/ to seek enlightenment from. *leeh ma-tistinir-ʃ*^{i} *b-raʔy*^{i} *waaḥid xabiir fil-qanuun* why don't you consult the opinion of a legal expert. *ɛala sabiil il-istinaara* (just) by way of seeking information, as in *ʔana b-asʔal-ak ɛala sabiil il-istinaara w-mif qaṣd-i ʔinnak ʔinta lli tnaffiz il-maʃruuɛ* I am just asking you to explain (the matter) - I don't mean you to be the one to carry out the project. - vn *ʔistinaara*; ava *mistiniir*.
الاستنارة *ʔil-ʔistinaara* /n/ *[hist]* the Enlightenment.
مستنير *mustaniir* /adj */ knowledgeable, enlightened.

ن و ر[2]
نور *nawar* /coll n/ **1** gypsies. **2** rowdy and disreputable people.
نوري *nuuri* /unit n */ **1** a gypsy. **2** a swindler. *ʔalf*^{i} *nuuri wala damanhuuri [prov]* a thousand con men are preferable to a single Damanhouri (a comment on the alleged Damanhouri propensity for cunning and swindling).

ن و ر[3]
مناورة *munawra, minawra* <Fr> /n pl *-aat*/ manoeuvre.
ناور *naawir* /vi/ to manoeuvre. - vn *munawra, minawra*; ava *munaawir, minaawir*.

ن و ر[4] see ن و ا ر: *nawaar*

ن و ر ج
نورج *noorag* /n pl *nawaarig*/ threshing sled (see Pl.D, 1).

ن و ر د
نواردي *nuwardi* /adj/ blue roan (of a horse).

ن و س
نوّاسة *nawwaasa* /n pl *-aat*/ night-light, small light left burning all night. - also *wannaasa*.

ن و ش
نوش *nawaʃ (i)* /vt/ to confuse, perplex. *ʔinta nawaʃt-i-ni min xuruug-ak wi-duxuul-ak* you've driven me to distraction with your comings and goings. ‖ *ʔig-gadaɛ da ɛandu nawaʃ* this guy is soft in the head. - vn *nawaʃ, nawaʃaan*; ava *naawif*; pva *manwuuf*.
منووش *manwuuf* /adj * and pl *manawiif*/ soft in the head, crazy, touched.
مناويشي *manawiifi* /adj invar/ crazy, cuckoo.
نوشة *nooʃa* /n pl *-aat, niwaʃ*/ a disturbance of the mind. *gat-lu nooʃa kida qaɛad yiḍrab fil-ɛiyaal* he went off his head for a while and kept hitting the children.
اتنوش *ʔitnawaʃ* /vi/ **1** to be or become confused or perplexed. **2** to become disturbed in the mind. - ava/iva *mitniwif*.
ناوش *naawif* /vt/ to have a brush with, skirmish with. - vn *minawʃa, munawʃa*; ava/pva *minaawif*.
اتناوش *ʔitnaawif* /vi/ **1** to skirmish. *ʔig-gefeen itnawʃu qabl il-iftibaak il-fiɛli* the two armies skirmished before the real engagement. **2** passive of *naawif*. - ava/iva *mitnaawif*.

ن و ط

نوط *nooṭ* /n pl *ʕanwaaṭ*/ medal, decoration, order.

ن و ع

نوع *nooʕ* /n pl *ʕanwaaʕ*/ kind, type. *ʕidduu-ni birʃaam noʕeen* they gave me two sorts of pills. *sagaayir nooʕ mumtaaz* fine quality cigarettes. *da miʃ min in-nooʕ illi b-afaḍḍal-u* that's not of the kind I prefer. *ʕiṭ-ṭalaaq ʕanwaaʕ* divorce is of various types. *ʕig-ginn[i] b-ʕanwaaʕ-u rakib-ha* she's possessed by every variety of jinn. ‖ *tariix il-milaad wi-nooʕ il-mawluud* the date of birth and sex of the child.

نوعى *nawʕiˆ* /adj/ **1** pertaining to class or type. *mustawayaat nawʕiyya lis-saqaafa* various levels of culture. **2** *[phys]* specific. *ḥaraara nawʕiyya* specific heat.

نوعيّة *nawʕiyyaˆ* /n pl *-aat*/ type, sort, category. *munʃaʕaat min kull in-nawʕiyyaat* establishments of every sort.

نوّع *nawwaʕ* /vt/ to diversify, vary. *nawwaʕu l-ʕintaag bitaʕ-hum ʕaʃaan yizawwidu l-mabiʕaat* they varied their production so as to increase sales. - vn *tanwiiʕ*; ava/pva *minawwaʕ*.

منوّعات *munawwaʕaat* /pl n/ variety acts.

اتنوّع *ʕitnawwaʕ* /vi/ to be or become diversified or varied. - ava *mutanawwiʕ*; ava/iva *mitnawwaʕ*.

ن و ف

النيافة *ʕin-niyaafa: ṣaaḥib in-niyaafa [Chr]* His Grace (title accorded to a bishop in the Coptic Church).

ن و ف ى

نوفى *noovi* <It *nuova*> /adj invar/ brand-new.

ن و ق

ناقة *naaqa* /n pl *nuuq, niyaaq*/ she-camel. ‖ *bizz in-naaqa* variety of grape.

ن و ل [1]

نال *naal (u)* /vt/ **1** to obtain, achieve. *kull[i] sana wi-nta ṭayyib wis-sana g-gayya tnuul kull illi f-baal-ak* the season's greetings and may you achieve all you hope for in the coming year. **2** to affect. *ma-yṣaḥḥ[i]-ʃ yinul-ni ḍarar min ʕamaayil ʏeer-i* harm shouldn't come to me through the doings of others. - vn *nool, nawalaan, nawaal*; ava *naayil*.

نوّل *nawwil* /vt/ **1** to cause to obtain, cause to get hold of. *rabb-i-na ynawwil-ak illi f-baal-ak* may Our Lord grant you your desire! **2** to hand over. *ʕana ʕanawwil-huu-lak wil-baaqi ʕaleek* I'll hand him over to you and the rest is your business! ‖ *ʕaah law yinawwilu-huu-li* ≈ if only I could lay my hands on him! - vn *tanwiil*; ava/pva *minawwil*.

اتنوّل *ʕitnawwil* /vi/ passive of *nawwil*. - iva *mitnawwil*.

ناول *naawil* /vt/ **1** to hand to. *nawil-ni ʃ-ʃakuuf* hand me the hammer. ‖ *maktab munaawil* telegraph relay office. - *ʕagr[i] mnaawil* the reward of the carrier, the reward of the go-between, as in *ʕana liyya fil-xeer illi tʕamal da ʕagr[i] mnaawil* I only deserve credit for acting as go-between in the good that was done (i.e., what has been achieved didn't cost me anything). **2** *[Chr]* to administer communion to. - vn *minawla*; ava *minaawil, munaawilˆ*.

مناول *minaawil* /n */ builder's mate. ‖ *banna wi-mnaawil* see *banna*.

اتناول *ʕitnaawil* /vi/ **1** passive of *naawil*. **2** *[Chr]* to receive communion. - vn *tanaawul*; ava/iva *mitnaawil*.

تناول *tanaawul* /n/ *[Chr]* holy communion.

متناول *mutanaawil[1], mutanaawal* /n/ access, reach. *fi-mutanaawil ig-gamiiʕ* within everybody's reach, available or accessible to everybody. *fi-mutanaawil il-yadd* within reach, possible, accessible, available.

متناول *mutanaawil[2]* /n */ *[Chr]* communicant.

ن و ل [2]

نول *nool* /n pl *ʕanwaal*/ loom.

ن و ل و ن see ن ل و ن : *nawluun*

ن و م

نام *naam (a)* /vi/ **1a** to sleep. ‖ *naam ʕala wdaan-u* he was oblivious, he paid no attention. - *naayim ʕala rooḥ(-u)* living in a world of (one's) own. - *ʕabu ʕeen nayma* one feigning innocence and innocuousness. - *ʕana naayim* I pass (e.g., in card games). - *naam maʕa [euphem]* to sleep with, have sexual intercourse with. **1b** to lapse, fall into desuetude. *ʕil-mafruuʕ naam* the project was shelved. *ʕis-suuq naam* the market fell into a recession. **2** to lie, lie down, lie flat. *ʕig-gamuusa naamit ʕal-ʕarḍ* the buffalo lay down on the ground. *liḥaam ʕan-naayim* welding on a horizontal surface. **3** to go flat (of a tyre or battery). - vn *noom*; ava *naayim*.

¶ *naam ʕala-* (1) to keep quiet about (s.th. till a future date). *ʕana ʕandi ʃaqqa w-naayim ʕaleeha l-xaayit ma ʕalaqii-li waaḥid suʕuudi ʕaw kuweeti ʕaʕaggar-haa-lu b-taman kuwayyis* I have a flat I'm sitting on till I find a Saudi or Kuwaiti to rent it to for a good sum. (2) to neglect, let slide. *ḥ-asiib il-mawduuʕ maʕaak wi-ʕiwʕa*

tnaam ɛalee I'll leave the matter with you, and don't you dare neglect it.

نوم *noom* /n/ sleep. ‖ *ʔabu n-noom* poppy. - *wa-law kunt[a] ḥ-akammil ɛaʃaa-ya noom* ≈ even if I have to go to bed supperless, as in *da ʔana ʔaɛiif bi-ʃaraf-i wa-law kunt[a] ḥ-akammil ɛaʃaa-ya noom* I'd rather live honestly even if I go without food.

نومة *nooma* /n/ **1** a sleep. *ʔana lissa ṣaaḥi min nooma ṭawiila* I've just got up from a long sleep. *raaḥit ɛalayya nooma* I've overslept. **2** /pl *-aat*/ sleeping place. *ruuḥ gahhiz nomt-ak* go and prepare yourself a place to sleep. ‖ *wi-ḥyaat raas ʔabuu-k fi-nomt-u* by your father's head in his grave (a conventional oath).

منام *manaam* /n/ **1** sleep. *fuqt[i] min ɛizz il-manaam* I awoke from the depths of sleep. **2** sexual intercourse. *di kwayyisa fil-manaam* she's good in bed. — /pl *-aat*/ **3** dream. *fuft[i] talat manamaat il-lelaa-di* I had three dreams last night.

منامة *manaama* /n pl *-aat*/ grave. *ʔin ʃa-lla ʔaʃuuf fiikum yoom wiḥiʃ qabl m-aḥuṭṭ[i] raas-i f-manamt-i* I hope to see you in misery before I die!

المنامة *ʔil-manaama* /prop n/ Manama, capital of Bahrain.

انتام *ʔitnaam* /vi/ (impersonal) passive of *naam*. *da maakaan ma-yitnam-ʃ[i] fii* that's a place not fit to be slept in. *ʔil-maʃruuɛ itnaam ɛalee* ≈ the project was left aside. - iva *mitnaam*.

نيّم *nayyim* /vt/ **1a** to cause to fall asleep, put to sleep (usually by natural means). *ʔis-suxuniyya nayyimit-ni* the heat made me fall asleep. **1b** to allow to sleep. *ʔil-waad mawguuɛ bi-snaan-u ma-bi-ynayyim-nii-ʃ ʔabadan* the boy's in pain with his teeth, and won't let me get any sleep. **1c** to put to bed. *ʔixsil wiʃʃ-a-ha qabl[i] ma tnayyim-ha* wash her face before you put her to bed! **2** to cause to lie down, lay down. *nayyim ik-kitaab ʔaḥsan yuqaɛ* lay the book flat or it'll fall! **3** to cause a setback to. *qillit il-filuus nayyimit is-suuq* the scarcity of cash caused a market recession. *nayyimt il-ḥaala b-wiʃʃ-ak il-ɛikir* your ugly mug has jinxed things around here. **4** to take in, deceive. *baṭṭal tanyiim fil-xalq* stop trying to kid people! - vn *tanyiim*; ava/pva *minayyim*.

نوّم *nawwim* /vt/ to put to sleep (usually by artificial means). *gibt[i] ḥububb tinawwim-ni* I got some pills to put me to sleep. ‖ *tanwiim maxnaṭiisi* hypnosis. - vn *tanwiim*; ava *minawwim*.

منوّم *munawwim* /n/ **1** /pl *-aat*/ soporific, sleeping pill. **2** (also *munawwim maxnaṭiisi*) /pl *munawwimiin*/ hypnotist.

اتنيّم *ʔitnayyim* /vi/ passive of *nayyim*. - iva *mitnayyim*.

اتنوّم *ʔitnawwim* /vi/ passive of *nawwim*. - iva *mitnawwim*.

استنيم *ʔistanyim* /vt/ to take advantage of (s.o. asleep). *ʔistanyimuu-ni w-saraqu l-maḥfaẓa* they seized the opportunity of my being asleep and stole the wallet. - ava *mistanyim*.

استنوم *ʔistanwim* /vi/ to have a wet dream. - vn *ʔistinwaam*; ava *mistanwim*.

ن و ن

نون *nuun* /fem n, pl *-aat*/ twenty-fifth letter of the Arabic alphabet.

تنوين *tanwiin* /n/ *[gram]* nunation.

ن و ن و [1]

نونو *nawnaw* /vi/ to mew. *tiɛraf tinawnaw zayy il-quṭṭa* can you mew like a cat? - vn *nawnawa*; ava *minawnaw*.

اتنونو *ʔitnawnaw* /vi/ (impersonal) passive of *nawnaw*. *laazim yitnawnaw lil-quṭaṭ ɛaʃaan tiigi* the cats have to be mewed at to come. - iva *mitnawnaw*.

ن و ن و [2]

نونو *nuunu* **1** /n/ baby, toddler. **2** /adj invar/ tiny, teeny, weeny.

ن و ه

نوّه *nawwah, nawwih*† /vi/ to allude. *nawwih ɛan iz-zaɛal illi benhum wi-been baɛḍ* he alluded to the bad relations existing between them. - vn *tanwiih*; ava *minawwih*.

¶ *nawwah bi-* to praise.

ن و و [1]

نوّ *naww* /n/ light wind that blows down the Nile from the south.

نوّة *nawwa[1]* /n pl *-aat*/ one of a number of high, often rain-bearing, winds that blow at regular intervals on the Mediterranean coast during the winter and spring. *nawwit raas is-sana* from 1st January for two days (westerly); *nawwit il-feeḍa k-kibiira* from 9th January for five days (south-westerly); *nawwit il-ɣuṭaas* from 18th January for five days (south-westerly); *ṇawwit ik-karm* from 27th January for six days (north-westerly); *nawwit baaqi k-karm* from 3rd February for seven days (north-westerly); *nawwit if-fams iṣ-ṣuɣayyara* from 14th February for two days (north-westerly); *nawwit is-salluum* from 4th March for three days (north-westerly); *nawwit il-ḥusuum* from 8th

March for two days (north-westerly or north-easterly); *nawwit baaqi l-ḥusuum* from 14th March for two days (north-westerly); *nawwit if-fams ik-kibiira* from 22nd March for three days (westerly); *nawwit il-ɛawwa* from 29th March for three days (north-westerly); *nawwit baaqi l-ɛawwa* from 2nd April for two days (north-westerly); *nawwit il-muknisa* from 20th November for four days (north-westerly); *nawwit baaqi l-muknisa* from 26th November for two days (north-westerly); *nawwit qaasim* from 4th December for four days (south-westerly); *nawwit baaqi qaasim* from 10th December for two days (north-westerly); *nawwit il-feeḍa ṣ-ṣuṛayyara* from 13th December for two days (north-westerly); *nawwit baaqi l-feeḍa* from 21st December for two days (south-westerly); *nawwit ɛiid il-milaad* from 29th December for two days (north-westerly).

ن و و ² see ن و ى ²: *nawawi*

ن و ى ¹
نوى *nawa² (i)* **1** /vi and vt/ to decide, intend. *naweet ʕanzil* I decided to get down. *ʕilli nawyiin ɛaṣ-ṣeed* those intending to hunt. **2** /vt/ **2a** to vow (to undertake forthwith) a religious act. *naweet win-niyya li-llaah* here I vow (to do so-and-so) and vows are made to God (i.e., they cannot be made deceitfully). **2b** *[Isl]* to initiate (a prescribed religious act). *naweet iṣ-ṣiyaam* I have entered a state of fasting. - vn *niyya*; ava *naawi*; pva *manwi*.
نيّة *niyya* /n pl *-aat, nawaaya*/ intention. *saliim in-niyya* well-intentioned. *ʕil-ʕaɛmaal bin-niyyaat [prov]* (deeds are measured by intentions) it's the thought that counts. ‖ *ɛala niyyaat-u* gullible. - *huwwa nawii-lak ɛala niyya* he's out to get you.

ن و ى ²
نوى *nawa³* /coll n/ pips, pits, kernels.
نواية *nawaaya* /unit n, pl *-aat*/ a pip, a pit, a kernel. ‖ *ʕin-nawaaya tisnid iz-ziir [prov]* (a pip may support a water-jar) ≈ important things may depend on paltry things.
نواة *nawaah* /n/ nucleus.
نووى *nawawi* /adj/ nuclear. *ʕinfigaar nawawi* nuclear explosion.

ن و ى ³
نوّى *nawwa²* /vi/ to mew (of a cat). - vn *tanwiyya*; ava *minawwi*.

ن ى ا م
نيام *niyaam* <Dinka>: *niyaam niyaam* /coll n/ cannibals.

ن ى ء see ن ى ى

ن ى ب ¹ see ن ا ب ¹: *naab¹*

ن ى ب ² see ن و ب ¹: *niyaaba, naayib*

ن ى ح
ناح *naaḥ² (i)* /vi/ to become ripe and ready to burst. *naqqi tiina nayḥa w-hat-ha* pick a plump ripe fig and bring it. *bint¹ nayḥa b-ṣaḥiiḥ* a dish of a girl. - vn *nayaḥaan*; ava *naayiḥ*.
نياح *niyaaḥ↑* /vn/ death, dying.
اتنيّح *ʕitnayyaḥ↑* /vi/ *[Chr]* to die. - ava *mutanayyiḥ*.
المتنيّح *ʕil-mutanayyiḥ* /n */ *[Chr]* polite form of reference to a dead person ≈ the departed.

ن ى ر ¹
نيرة *niira* /n pl *niyar*/ *[text]* heddle-wire.

ن ى ر ² see ن و ر ¹: *nayyir, niyyir, mustaniir*

ن ى ر و ز see ن ر و ز: *neeruuz*

ن ى ش
نيش *niif* <Fr> /n pl *-aat*/ niche.

ن ى ف ¹
نيفة *niifa* /n/ dish of grilled goat meat.

ن ى ف ² see ن و ف: *ʕin-niyaafa*

ن ى ك
ناك *naak (i)* /vt/ *[coarse]* to fuck. ‖ *ḥ-aniik ʕafkaar-ak* I'm going to give you bloody hell! - vn *neek, niyaaka*; ava *naayik*; pva *manyuuk*.
نيكة *neeka* /inst n, pl *-aat*/ *[coarse]* a fuck.
اتناك *ʕitnaak* /vi/ *[coarse]* to be fucked. - iva *mitnaak*.
متناك *mitnaak* /n */ *[coarse]* passive homosexual, catamite, nance.
متناكة *mitnaaka* /n pl *-aat*/ *[coarse]* whore, trollop. *ya-bn il-mitnaaka* you son of a whore!
نيّك *nayyik* /vt/ *[coarse]* to make, cause or allow (s.o.) to fuck. ‖ *nayyik (-u) n-namla [coarse]* to give (s.o.) a very hard time, give (s.o.) hell. - ava/pva *minayyik*.
اتنيّك *ʕitnayyik* /vi/ passive of *nayyik*. - iva *mitnayyik*.

ن ى ك ل see ² ن ك ل : *neekal*

¹ ن ى ل
النيل *ʕin-niil* /prop n/ the Nile.
نيلى *niili* /adj/ **1** pertaining to the Nile. *samak niili* Nile fish. **2** *[agric]* irrigated by the Nile flood (of crops). *zarɛ[i] niili* summer crops.

² ن ى ل
نيلة *niila* /n/ **1** indigo. *ʔazraq zayy in-niila* as blue as indigo. **2** disaster (usually in a context of abuse). *gat-ak niila* or *ʕitnayyil bi-niila* ≈ go to hell! — /adj invar/ **3** lousy, rotten. *ɛarabiyyaat mustawaa-ha niila* cars in lousy condition.
نيّل *nayyil* /vt/ **1** to mess up, louse up. *ʕil-ħarb[i] nayyilit ħaal maṣr* war loused up conditions in Egypt. **2** *[coarse]* to fuck. — /vi/ **3** to be or become messed up or loused up. *ʕil-ħaal nayyil* the situation became lousy. - vn *tanyiil*; ava *minayyil*.
اتنيّل *ʕitnayyil* /vi/ **1** to get in a mess. *ʕitnayyilt[i] wi-tlabbiʃt* I got confused and too scared to do anything. *ʕil-mas ʕala tnayyilit xaaliṣ* the affair got completely messed up. **2** *[abus]* to go to hell, get lost. *ʕitnayyil ɛala ɛeen-ak* ≈ go to hell! - /commonly used as an intensifier/ *la twaẓẓaft[i] wala tnayyilt* ≈ I didn't get the bloody job or anything! *ma-titnayyil tiruuḥ il-madrasa* why the hell don't you go to school! - ava *mitnayyil*.
متنيّل *mitnayyil* **1** /ava/ ‖*ya mitnayyil* or *ya mitnayyil bi-niila* or *ya mitnayyil ɛala ɛeen-ak* ≈ you miserable so-and-so! **2** /adj */ lousy, rotten. *ħaẓẓ-i mitnayyil* I have lousy luck. *ṣabaħt[i] mitnayyil* I got up feeling rotten.

ن ى ل ن
نايلون *naylun* (also *naylu*↓) <Engl> /n/ **1** nylon. ‖*kiis naylun* polythene bag. **2**↓ neon. *lamba naylun* neon light.

ن ى ل و see ن ى ل ن : *naylu*

¹ ن ى م see ن و م : *naayim, nayyim, ʕitnayyim, ʕistanyim*

² ن ى م see ن ى أ م : *niyaam*

ن ى ن
نينة *neena* <T *nine* grandmother> /n pl *-aat*/ title of, and respectful form of address to, one's mother or any elderly female relative.

ن ى و ن
نيون *niyoon* <Engl> /n/ neon.

¹ ن ى ى
نىّ *nayy* /adj */ **1** raw, uncooked. *taaxud il-laḥma n-nayya w-tufrum-ha* you take the raw meat and mince it. *ʕil-laḥma lissa nayya* the meat is still (half) raw, the meat hasn't been cooked enough. ‖*beeḍ nuṣṣ[i] nayy* soft-boiled eggs. - *nayy[i] f-nayy [cook]* method of cooking by which meat and vegetables are put together raw in a pan and cooked with seasonings and water. **2** unripe. *ʕil-fakha di lissa nayya* this fruit isn't ripe yet. *xaʃab nayy* unseasoned timber. ‖*ṭuub nayy* sun-dried mud brick. **3** spineless, characterless (of people).

² ن ى ى see ¹ ن و ى : *niyya*

هـ

ه see ح : *ha-*

ه ا

ها *haa* /fem n, pl *-haat*/ twenty-sixth letter of the Arabic alphabet. - also *haaʕ*, ***hih***, ***heeh***.

ه ا ء

هاء *haaʕ* /fem n, pl *-aat*/ twenty-sixth letter of the Arabic alphabet. - also *haa*, ***hih***, ***heeh***.

ه ا ت

هات *haat* /imper, fem ***haati***, pl ***haatu***/ bring! fetch! *haat il-ɕarabiyya* get the car! *xud ḥisaab-ak wi-haat il-baaqi* take what you're owed and give back the change! ‖*haat ʃiid-ak* lend a hand! *-haat wi-xud* give and take. *-wi-haat(-ak) ya* phrase signalling (1) intensity of action, as in *yadoob il-ɕagal ɕadda l-xaṭṭ' wi-haat-ak ya zɛiiq* the wheels had barely swerved over the line when shouting started. (2) continuation of action, as in *qaɕadna nnakkit wi-haat ya taryaqa w-diḥk' w-fawaziir* we went on joking, and the mocking, laughing and riddles continued non-stop. *wi-haat ya daɕa ɕala l-fariiq it-taani* going on cursing the other team. *-haat (wara)* back up! *-haat (kamaan)* go on! continue!

ه ا ز

هذا *haaza*ʔ /fem *haazihi*ʔ/ **1** /demonst pron/ this, that. *min ʃagl' haaza* for this (or that) reason. **2** /demonst adj/ *wi-f-haazihi ʒ-ʒuruuf* and in these circumstances. -/in unelevated speech/ *li-ɤayit waqt-i-na haaza* until this very moment.

هذها *haazúha*ˈ /demonst adj, invar/ *[joc, in films etc.]* this, that. *fi-haazúha s-saaɕa kunt' naayim* I was asleep at that time (of the day). *ḥ-aaxud ʃagazt-i f-haazúha l-yoom* I'll take my holiday on that day.

ه ا ك ز ا

هكذا *haakaza* (also *hakáza*): *wi-haakaza* and so on, and so forth.

ه ا ل

هالة *haala* /n pl *-aat*/ halo. ‖*ɕen-ha ḥawaleeha halaat* she has rings around her eyes.

ه ا ن م

هانم *haanim* <T *hanım*> /n pl *hawaanim*/ title of, and respectful term of address or reference to, a lady. *ya (sitt')* *haanim* madam. *samiira haanim* Madame Samira.

هوانمى *hawanmi* /adj invar/ feminine, delicate, unmanly. *sagaayir hawanmi* small cigarettes. *ʃidee hawanmi* he has hands like a woman's. *kalaam-u hawanmi* he talks like a woman.

ه ا ى

هاى ***haay*** <Engl *high*> /adj invar/ upper-class. *ʃiftakaruu-ni haay* they thought me upper-class. *dool naas haay* those are upper-class people.

ه ء ه

هأهأ *haʃhaʃ*, *haʃhaʃ* /vi/ to laugh. -vn *haʃhaʃa*, *haʃhaʃa*; ava *mihaʃhaʃ*, *mihaʃhaʃ*.

ه ب see و ه ب : *hiba*

ه ب ب '

هبّ ***habb'*** *(i)* /vi/ **1** to leap up, spring, start. *ʃin-naar habbit* the fire flared up. *ʃil-ɕaraq habb' ɕalayya* I broke out into a sweat. *ʃir-raagil habb' fiyya w-ṭarad-ni* the man sprang up at me and threw me out. ‖*kull' min habb' w-dabb* ≈ every Tom, Dick and Harry. **2** to

blow (of wind). *ʃin-nisma lamma habbit ḫasseet bin-noom* I felt sleepy when the breeze blew. - vn *habb, hababaan*; ava *haabib*.

هبّ *habb*[2]: *habb*[i] *gazam* all of a sudden, at once and unexpectedly. *wi-raaḥ mixayyar raʃy-u kida habb*[i] *gazam* all at once he changed his mind.

ه ب ب [2]

هباب *hibaab* /n/ **1** soot. ‖ *zayy il-hibaab* bad, lousy, as in *ḫalt-u zayy il-hibaab* he's in lousy shape, *ʃort-ak illi zayy il-hibaab* your rotten advice. **2** *[deris]* damned thing, something not liked. *ʃil-hibaab illi b-yiʃrab-u* the filthy stuff he drinks. *feen si hbaab bitaʕ-kum* where is your lousy Mr. So-and-So?

هبابة *hibaaba* /n/ **1** a speck of soot. **2** *[deris]* damned thing, something not liked.

هبّب *habbib* /vt/ **1** to mark with soot. *ʃil-wabuur habbib il-ḫalla* the primus stove has sooted the pot. **2** to do (e.g., a job of work) badly, botch up. *ʃeeh illi bi-thabbib-u da* ≈ what the hell are you messing about at? - vn *tahbiib*; ava/pva *mihabbib*.

مهبّب *mihabbib* /adj */ bad, lousy. *ʕiiʃa mhabbiba* a rotten life. *yoom mihabbib* a botched up day, an unlucky day. *kalaam mihabbib* smutty talk, nasty words. *ʃamma ḫittit ʃoora mhabbiba* what a lousy piece of advice!

اتهبّب *ʃithabbib* /vi/ **1** to be marked with soot. **2** to be botched up. - iva *mithabbib*.

ه ب ب [3]

هوبّ *hubb* <perh Copt> /interj/ **1** heave! heave ho! (cf *heela hubb, heela hubba*). **2** expletive expressing suddenness. *lammit il-huduum wi-hubb*[i] *ʃaylaa-ha ʕala beet ʃumm-a-ha* she gathered the clothes together and carried them off to her mother's house. ‖ *wi-hubb*[i] *ṭubb* without ado, there and then, as in *lissa b-aquul taʕaalu zuruu-na baṣṣeet hubb*[i] *ṭubb laʔet-hum ʕandi fil-beet* no sooner had I told them to visit us than there I found them at my place. **3** *[children]* carry (me)! ups-a-daisy!

هبّه *hubba* = *hubb* 1 and 3. - also *ʃubba, ʃabbah*.

ه ب د

هبد *habad (i)* /vt/ **1** to slam, bang. *ʃaalˇ il-koora w-habad-ha fil-ʃarḍ* he picked up the ball and slammed it to the ground. **2** to deal (a hard blow) to. *habadt-u ʕalameen* I gave him a hard slapping. **3** to wolf down, knock back (food or drink). *raaḥ haabid farxa b-ḫal-ha* he knocked back a whole chicken. **4** *[coarse]* to copulate with, bang. - vn *habd*; ava *haabid, mahbuud*.

هبدة *habda* /pl *-aat*/ instance noun of *habd*.

اتهبد *ʃithabad* /vi/ **1** passive of *habad*. **2** to crash, slam. ‖ *ʃitfaal wi-thabad* to create a great fuss, as in *miʃ ḫa-taaxud wala malliim ziyaada lamma titfaal wi-tithibid* you're not going to get another millime however much fuss you make! - ava/iva *mithibid*.

انهبد *ʃinhabad* = *ʃithabad*. - ava/iva *minhibid*.

ه ب ر

هبر *habar (u)* /vt/ **1** to bite off, grab (a large chunk). *ʃik-kalb*[i] *habar-u f-rigl-u* the dog took a chunk out of his leg. **2** to take and not return, pocket. *habaru l-wallaaʕa* they took the lighter and never gave it back. *ʃil-bayyaaʕ habar minni xamsa gneeh* the salesman took me for five pounds. **3** to deal (a blow) to. *habart-u kaffᵃ ʕala ʔafaa* I dealt him a slap on the back of his neck. - vn *ḥabr, habaraan*; ava *haabir*; pva *mahbuur*.

¶ *habar fi-* to grab at, clutch at. *habarit fi-faʕr-u* she grabbed at his hair.

هبرة *habra* /n, pl *-aat, hubar*/ chunk, hunk (particularly of meat).

اتهبر *ʃithabar* /vi/ passive of *habar*. - iva *mithibir*.

انهبر *ʃinhabar* = *ʃithabar*. - iva *minhibir*.

هابر *haabir* /vi/ **1** to tinker, tamper. *ma-thabir-ʃ*[i] *fir-radyu* don't tamper with the radio. *ma-luu-ʃ fuxla xeer il-mihabra ṭuul in-nahaar* he has nothing to do except potter around all day long. **2** to struggle, strain, exert effort. *bi-yhaabir ʕaʃaan luqmit il-ʕeeʃ* he struggles to earn his daily bread. - vn *mihabra*; ava *mihaabir*.

اتهابر *ʃithaabir* /vi/ (impersonal) passive of *haabir*. *ʃit-tilifizyon-da mithaabir fii* this television has been tampered with. - iva *mithaabir*.

ه ب ش

هبش *habaʃ (i)* /vt/ **1** to scratch, claw. *ʃil-quṭṭa habaʃit-ni* the cat scratched me. **2** to take and not return, pocket. **3** to deal (a blow, etc.). *habaʃit-ni ʔalam suxn* she gave me a stinging slap. - vn *habʃ, habaʃaan*; ava *haabiʃ*; pva *mahbuuʃ*.

¶ *habaʃ fi-* to flare up at, snap at. *ma-ḫadd*[i]*-ʃ yikallim-ak ʃilla ma tihbiʃ fii* no one can speak to you without your snapping at him.

هبشة *habʃa* /pl *-aat*/ instance noun of *habʃ*.

هبّاش *habbaaʃ* /n */ **1** scratcher. **2** grabber.

اتهبش *ʃithabaʃ* /vi/ **1** to be scratched, be clawed. **2** to be dealt (a blow). - iva *mithibiʃ*.

انهبش *ʃinhabaʃ* = *ʃithabaʃ*. - iva *minhibiʃ*.

هبّش *habbiʃ* **1** /vt/ to grab at, snatch at. *ma-tuqʕud-ʃ*[i] *thabbiʃ fil-ʃakl* don't keep grabbing at the food! **2** /vi/ to speak abruptly. *kalaam-u kull-u tahbiiʃ* everything he

says is short and sharp. - vn *tahbiif*; ava/pva *mihabbif*.
مهبّشاتي *mihabbifaati* /n pl *-yya/* snapper-up (of money), shark.
اتهبّش *ʔithabbif* /vi/ to be grabbed at, be snatched at. - iva *mithabbif*.
هابش *haabif* /vi/ **1** to stretch to reach, reach out. *ʔil-ɛayyil bi-yhaabif ɛal-liɛba illi fooq it-ṭarabeeza* the child is stretching to get the toy on the table. **2** to struggle, strain (to do s.th.). *ʃaayif ik-kitaaba mhabʃa* I can hardly make out the writing. - vn *mihabʃa*; ava *mihaabif*.

ه ب ط
هبط *habaṭ (u)* **1** /vi/ to come down, descend. *ʔiṭ-ṭayyaara habaṭit* (1) the plane lost height. (2) the plane landed. *ʔil-ʔasɛaar habaṭit* prices dropped. **2** /vt/ to deal (a blow or the like) to. - vn *hubuuṭ, habaṭaan*; ava *haabiṭ*.
هبط *hibiṭ (a)* /vi/ to tire, lose one's energy. *ʔinta b-tihbaṭ bi-surɛa kida leeh* why do you become tired so quickly? - vn *habaṭaan*; ava *habṭaan*.
هبوط *hubuuṭ* /n/ **1** descent, fall, drop. *hubuuṭ iḍṭiraari* emergency landing, crash landing. **2** physical exhaustion, weakness. *ʔana ḥaasis bi-hubuuṭ fidiid* I feel utterly exhausted. *hubuuṭ fil-ɋalb* heart failure. **3** lowering. *hubuuṭ ir-raḥim [path]* prolapse of the uterus.
هبّط *habbaṭ* /vt/ **1** to lower, reduce. *habbaṭ is-surɛa* he reduced the speed. *ʔil-marwaḥa habbaṭit daragit il-ḥaraara ʃwayya* the fan has lowered the temperature a bit. **2** to calm down, subdue. *habbaṭuu ɛaʃaan yuskut* get him to simmer down so that he'll be quiet! - vn *tahbiiṭ*; ava/pva *mihabbaṭ*.
اتهبّط *ʔithabbaṭ* /vi/ **1** to be lowered, be reduced. **2** to be calmed down, be subdued. - iva *mithabbaṭ*.

ه ب ل [1]
هبل *habal[1] (i)* /vt/ to drive (s.o.) out of his wits, drive insane. *ʔil-bint[i] habalit-u* the girl drove him off his head. - vn *habal, habalaan*; ava *haabil*; pva *mahbuul*.
هبل *habal[2]* /n/ silliness, stupidity.
مهبول *mahbuul* /adj pl *mahabiil*/ crazy.
هبالة *habaala* /n/ simplicity, foolishness. ‖*saayiɋ il-habaala ɛal-ɛabaaṭa* acting the complete fool.
هبيل *habiil* /adj pl *hubala*/ silly, simple-minded, stupid.
أهبل *ʔahbal* /adj, fem *habla*, pl *hubl, hibl*/ silly, simple-minded. *ʔibn il-habla yɛiif ʔaktar [prov]* (the son of the foolish woman lives longer) it doesn't pay to try to be clever and finicky. ‖ *ʔil-ɛayiz ʔahbal* necessity knows no law.
هبلي *habulli* /adj invar/ haphazard, disorganized. *ɛiiʃa habulli* an aimless existence. *raagil habulli* disorganized and unthinking man. *bil-habulli* in a haphazard and unpremeditated manner, thoughtlessly, as in *ɛaayif kida bil-habulli* he just takes life as it comes.
اتهبل *ʔithabal* /vi/ to be driven out of one's wits, become crazy. - ava/iva *mithibil*.
انهبل *ʔinhabal* = *ʔithabal*. - ava/iva *minhibil*.
هبّل *habbil* /vi/ to shout as if crazed. - vn *tahbiil*; ava *mihabbil*.
اتهابل *ʔithaabil* /vi/ to act the fool. - ava *mithaabil*.
استهبل *ʔistahbil* **1** /vt/ to take for a fool, treat as a fool. *ʔistahbil-ni w-xad il-ɛarabiyya rxiiṣa* he put one over on me and got the car cheap. **2** /vi/ to play the fool. *ma-ḥadd[i]-ʃ fiikum fakr-u walla b-tistahbilu* doesn't anyone remember him or are you just acting stupid? - vn *ʔistihbaal*; ava *mistahbil*.

ه ب ل [2]
مهبل *mihbalˆ* /n pl *mahaabil*/ vagina.
مهبلي *mihbaliˆ* /adj/ vaginal.

ه ب ل [3]
هبل *habal[3]* /n/ bone-setting as practised by experienced but medically unqualified people. *bituuɛ il-habal* bone-setters. *ʔabu habal* bone-setter.

ه ب ه ب [1]
هبهب *habhab* /vi/ to bark (of a dog). ‖ *ʔil-kalb[i] lamma yhabhab* (or *yhabhib) ma-ḥadd[i]-ʃ yirudd[a] ɛalee [prov]* (no-one answers a dog when it barks) ≈ there's no point in responding to insult. - vn *habhaba*; ava *mihabhab, mihabhib*.

ه ب ه ب [2]
هبهب *hubhub* /n/ liquor concocted from palm juice and methylated spirits.

ه ب و
هبو *habw* /coll n/ **1** swirls (of particles, soot etc.). *ʔil-wabuur ɛamal habw* the primus stove made swirls (of soot). ‖*habw il-ɋuṭn* fine flecks of cotton which accumulate in a cotton gin during processing. - *(ḥaʃiif) habw* fine quality hashish. **2** blasts (of hot air, from a fire etc.).
هبوة *habwa* /unit n, pl *-aat*/ **1** a swirl (of particles, soot etc.). **2** fine quality hashish. **3** a blast (of hot air, from a fire).

ه ب ى
هبى *hibi (a)* /vi/ to become weak with hunger. - vn *habayaan*; ava *habyaan*.

ه ب ى ك
هبيك *habyak* <T *hep yek*> /n/ pair of ones (in backgammon).

ه ت ت
هتّ *hatt (i)* /vt/ to cause to flinch, intimidate. *ʕana baṣṣa waḥda minni thitt-u* one glance from me is enough to make him flinch. ‖*bint*^{i} *thitt* ≈ a stunning girl. - vn *hatt, hatataan*; ava *haatit*; pva *mahtuut*.
¶ *hatt*^{i} *fi-* to snap at, burst out at. - *hatt*^{a} *ɛala* to attempt to frighten (s.o.). *hitt*^{a} *ɛal-waad bi-kilmiteen xallii yzaakir* do threaten the boy into studying (his lesson).
هتّة *hatta* /pl *-aat*/ instance noun of *hatt*.
اتهتّ *ʕithatt* /vi/ **1** to be made to flinch, be intimidated. **2** (impersonal) passive of *hatt*. *mif ʕana lli yithatt*^{i} *fii* I am not one to be intimidated. - iva *mithatt*.
هتّت *hattit* /vt/ to scare with (exaggerated) threats. *dayman yihattit-ha biṭ-ṭalaaq* he always scares her by hinting that he may divorce her. - vn *tahtiit*; ava *mihattit*.
اتهتّت *ʕithattit* /vi/ to flinch, be made to flinch, be scared. - ava/iva *mithattit*.

ه ت ر
هاتر *haatir* /vi/ to engage in a war of words, get into a slanging match. *bi-yhatru maɛa baɛḍ*^{a} *ɛal-faaḍi* they are abusing one another for no serious reason. - vn *mihatra*; ava *mihaatir*.
مهاترة *muhatra* /n pl *muhatraat*/ slanging match, battle of words. *ma-ybaṭṭaluu-ʃ muhatraat maɛa baɛḍ* they never stop wrangling with one another.
استهتر *ʕistahtar* /vi/ to underrate, take lightly. *huwwa mistahtar bil-maxaaṭir* he underestimates the dangers. *ɋaɛadt*^{i} *tistahtar fii li-ḥadd*^{i} *ma ḍarab-ak maɋlab* you went on underestimating him until he finally conned you. *ʕilli tistahtar-bu yixlib-ak [prov]* what you underestimate will gain domination over you. - vn *ʕistihtaar*; ava *mistahtar, mustahtir*↑.
مستهتر *mustahtir*↑ /adj */ careless, heedless, reckless. ‖*bint*^{i} (or *mara) mustahtira* a loose girl (or woman).

ه ت ش
هتش *hataʃ (i)* /vi/ to tell a tall story, shoot a line. *ɛumr-u ma-ybaṭṭal hatʃ* he never stops telling his fisherman's tales. - vn *hatʃ, hataʃaan*; ava *haatif*; pva *mahtuuf*.
هتش *hatʃa* /n, pl *-aat*/ a tall story, a fisherman's tale.
هتّاش *hattaaf* /adj */ given to telling tall stories. *ma-tsaddaɋ-haa-ʃ di hattaafa* don't believe her; she's a fibber.

ه ت ف
هتف *hataf (i)* /vi/ to shout a slogan, cheer. *ʕin-naas hatafit bi-suɋuuṭ iẓ-ẓulm* the people clamoured for the fall of injustice. - vn *hitaaf, hatafaan*; ava *haatif*.
¶ *hataf li-(..)* to lead (s.o.) to act intuitively. *hataf lina haatif* (or *ḫaaga hatafit-lina) ʕinnina nquum nirawwaḫ* something prompted us to get up and go home.
هتاف *hitaaf* /n pl *-aat*/ shouted slogan, shout, cheer.
هتافجيّة *hitafgiyya* /pl n/ = *hattiifa*.
هاتف *haatif* /n pl *hawaatif*/ voice from the unknown. *hataf-li haatif* I had a sudden inspiration.
هتّاف *hattaaf* = *hattiif*.
هتّيف *hattiif* /n * and pl *hattiifa*/ yes-man, hanger-on, drummer-up of support.
اتهتف *ʕithataf* /vi/ (impersonal) passive of *hataf*. *ʕahu da z-zaɛiim illi yithitif bi-sm-u f-kull*^{i} *maka*an this is the leader whose name is applauded everywhere. - iva *mithitif*.

ه ت ك
هتك *hatak (i)* /vt/ to expose, reveal. *hatak satr* (or *sitr*) to reveal a secret of (s.o. or s.th.), betray. *ʕallaah yihtik sitr-u zayy*^{i} *ma b-yihtiḳ sitr in-naas* may God expose him (to humiliation) just as he exposes others. *hatak ɛarḍ-* to dishonour sexually, abuse sexually. - vn *hatk, hatakaan*; ava *haatik*; pva *mahtuuk*.
مهتوكة *mahtuuka* /n pl *mahatiik*/ whore, woman of easy virtue.
هتيكة *hatiika* /n pl *hataayik*/ scandal, disgrace.
اتهتك *ʕithatak* /vi/ passive of *hatak*. - iva *mithitik*.
انهتك *ʕinhatak* = *ʕithatak*. - iva *minhitik*.
هتّك *hattik* /vt/ to rip up, tear open. *ʕir-ruṣaaṣa hattikit laḥm*^{i} *wirk-u* the bullet tore open his thigh. ‖*hattiku l-ʕaɛraaḍ* they ravished the womenfolk. - *mazag-ha thattik ʕastaar xalɋ illaah* it's a hobby of hers to expose people's secrets. - vn *tahtiik*; ava/pva *mihattik*.
مهتّكة *mihattika* = *mahtuuka*.
اتهتّك *ʕithattik* /vi/ **1** passive of *hattik*. **2** to split open (particularly of flesh). **3** to become morally lax. - vn *tahattuk*; ava/iva *mithattik*.
تهتّك *tahattuk* /n pl *-aat*/ tear in the flesh, gash.
مستهتك *mistahtik* /adj */ unchaste, licentious, immoral.

ه ت م
هتم *hatam* /n/ toothlessness.
أهتم *ʕahtam* /adj, fem *hatma*, pl *hutm*/ toothless.
اتهتم *ʕithatam* /vi/ **1** to lose one's teeth (especially the

front teeth). 2 to fall out, be knocked or pulled out (of teeth). - ava/iva *mithitim*.

ه ت ه ت

الهتهت *ʕil-hathat* /n/ epithet for the unknown disaster. *ʕin ʃa-lla yaxd-ak il-hathat* the Devil take you!

الهتهات *ʕil-hithaat* = *ʕil-hathat*.

ه ت و ر

هاتور *hatuur, hatuur* <Copt> /n/ the third month of the Coptic year (early November to early December). *hatuur ʕabu d-dahab il-mantuur* Hatur (the month) of scattered gold (allusion to the sowing of wheat).

ه ت ى

هاتى *haata* /vi/ to repeat incessantly. *ɛammaal yihaati b-talaata saaɤ ya ɋuuṭa - laakin ma-ḫadd*ⁱ*-ʃ ɛaayiz yiʃtiri* he keeps shouting 'Tomatoes for three piastres!' but no-one wants to buy. ‖ *lamma yhaati* (not) even if (he) keeps on and on about it, as in *miʃ ḫa-taaxud il-filuus lamma thaati* you won't see the money even if you scream for it. - vn *mihatiyya*; ava *mihaati*.

ه ج ا see ه ج ى : *higa*

ه ج ج

هجّ *hagg (i)* /vi/ to get out, quit (in exasperation). *haggeet mil-balad* I cleared out of town. *ʕin-naas bi-thigg*ⁱ *min ḫarr*ⁱ *maṣr*ⁱ *fiṣ-ṣeef* people flee the heat of Cairo in the summer. - vn *hagg, hagagaan*; ava *haagig*.

هجّة *hagga* /pl -aat/ instance noun of *hagg*.

مهجّ *mihagg* /n pl -aat/ *[rur]* deep circular niche in a wall (for storage, or to take the tongue of a wooden lock).

هجّج *haggig* /vt/ to drive out, cause to quit (in exasperation or despair). - vn *tahgiig*; ava/pva *mihaggig*.

اتهجّج *ʕithaggig* /vi/ passive of *haggig*. - iva *mithaggig*.

ه ج د

اتهجّد *ʕithaggid* /vi/ *[Isl]* to spend time late at night in prayer. - vn *tahaggud*; ava *mithaggid*.

ه ج ر

هجر *hagar (u)* /vt/ to desert, abandon. *miraat-u hagarit-u* his wife deserted him. - vn *hagr, hagr, hugraan, higraan*; ava *haagir*; pva *mahguur*.

مهجور *mahguur* /adj/ deserted, abandoned. *kalimaat mahguura*↑ obsolete words. *beet mahguur* a deserted house. *ʕayy*ⁱ *makaan mahguur* any deserted place. *ʕil-ḫabiib il-mahguur* the deserted lover.

هجرة *higra* /n/ 1 migration. *higrit iṭ-ṭuyuur* bird migration. 2 *ʕil-higra* the Hegira, the migration from Mecca to Medina by the Prophet Muhammad.

هجرى *higri* /adj/ relating to the Hegira. *sana higriyya* a year of the Muslim calendar.

مهجر *mahgar* /n/ place of emigration (particularly with regard to Arab migrants to the Americas).

اتهجر *ʕithagar* /vi/ to be deserted, abandoned. - iva *mithigir*.

انهجر *ʕinhagar* = *ʕithagar*.

هجّر *haggar* /vt/ to evacuate (people). - vn *tahgiir*; ava *mihaggar*; pva *muhaggar*.

مهجّر *muhaggar* /n */ forced emigrant.

اتهجّر *ʕithaggar* /vi/ to be evacuated (of people). *fi-ʕayyaam il-ḫarb*ⁱ *sukkaan il-mudun bi-yithaggaru lir-riif* during the war city-dwellers are evacuated to the countryside. - iva *mithaggar*.

هاجر *haagir, haagar* /vi/ to migrate, emigrate. *ṭuyuur mihagra* migratory birds. - vn *mihagra, muhagra*; ava *mihaagir*.

مهاجر *muhaagir* /n */ migrant, emigrant, immigrant.

ه ج س

هاجس *haagis* /n pl *hawaagis*/ sudden and troubling idea. *gaa-ni haagis* I was struck by an unsettling thought. *raagil malyaan hawaagis* a man beset by worries.

ه ج ص

هجص *hagaṣ (u)* /vi/ *[deris]* to make false boasts or claims. *hagaṣ ɛaleehum wi-xad il-filuus* he took them in with false promises and got hold of the money. - vn *hagṣ*; ava *haagiṣ*.

هجص *hagṣ* /n/ *[abus]* false boasting, bragging.

أهجص *ʕahgaṣ* /el/ *[abus]* more/most bragging or boasting.

هجّاص *haggaaṣ* <perh Copt> /n * and pl *haggaaṣa*/ *[abus]* one given to false boasting, braggart, loudmouth.

هجّص *haggaṣ* /vi/ *[deris]* to tell boasting lies, brag. *miʃ faaliḫ ɤeer ʕinnu yuɋɛud ɛala l-ɋahwa ṭuul in-nahaar yihaggaṣ ɛala ʕaṣḫaab-u* all he's good for is sitting in the café all day long giving his friends all kinds of spiel. - vn *tahgiiṣ*; ava *mihaggaṣ*.

ه ج ع

هجع *hagaɛ (a)* /vi/ to become calm, quiet and still. - vn *huguuɛ, hagaɛaan*; ava *haagiɛ*.

هجعة *hagɛa* /inst n/ a slumber, a snooze. *ruuḫ maddid*

taḥt iſ-ſagara w-xud-lak hagɛa go and lie under the tree and enjoy a sleep.

ه ج م

هجم *hagam (i)* /vi/ to make an assault, charge. *ſin-naas hagamit ɛal-gamɛiyya ſawwil ma fataḥit* the people stormed the co-operative store as soon as it opened. - vn *hugum, hagamaan*; ava *haagim*.

هجوم *huguum* /n pl *-aat*/ attack, offensive. ***huguum muḍaadd*** counter-attack. ***huguum gawwi*** air raid. ***ɛalb il-huguum*** *[sport]* centre forward. ***xaṭṭ il-huguum*** *[sport]* forward line.

هجومى *huguumi* /adj/ offensive, attacking.

هجمة *hagma* /n pl *-aat*/ raid, attack.

اتهجم ، *ſithagam* /vi/ (impersonal) passive of *hagam*. *ma-yithigim-ſi ɛalee bi-shuula* he is not easily attacked. - iva *mithigim*.

انهجم *ſinhagam* = *ſithagam*. - iva *minhigim*.

اتهجّم *ſithaggim* /vi/ to launch an attack, make an assault. *ſithaggim ɛalayya b-kursi* he went for me with a chair. *ſig-garaayid ithaggimit ɛalee* the newspapers attacked him. - vn *tahaggum*↑; ava *mithaggim*.

هاجم *haagim* /vt/ to attack, assault. *ſil-fariiq bi-yhaagim b-arbaɛt infaar* the team attacks with four persons. - vn *mihagma, muhagma*; ava *mihaagim*.

مهاجمة *muhagma* /n pl *-aat*/ = *huguum*.

مهاجم *muhaagim* /n */ *[sport]* forward, attacker.

اتهاجم *ſithaagim* /vi/ to be attacked, be assaulted, be raided. - iva *mithaagim*.

ه ج ن

هجين *hagiin* **1** /adj invar/ hybrid (particularly with a father of good stock and a mother of poor stock). **2** /coll n, pl *hign*/ racing camel(s), dromedaries.

هجّان *haggaan* /n pl *haggaana*/ **1** cameleer. **2** *ſil-haggaana* /pl n/ the Camel Corps.

هجّن *haggin* **1** /vt/ to cross-breed, hybridize. *firaax mihaggina* hybrid chickens. **2** /vi/ to walk like a camel. *ſuuf ſizzaay bi-thaggin fil-maſy* see how she sways clumsily like a camel. - vn *tahgiin*; ava/pva ***mihaggin***.

ه ج ى

هجا، هجاء *higa* = *higaaya*. *ḥuruuf il-higa* the alphabet, the letters of the alphabet.

هجاية *higaaya* /n/ spelling.

هجائى *higaaſi* /adj/ alphabetical.

اتهجّى *ſithagga* /vt/ to spell. - vn *tahgiyya* ava/pva *mithaggi*.

استهجّى *ſistahagga* /vt/ to spell. *miſ ɛaarif yistahagga ſism-u* he doesn't know how to spell his name. ‖ *lissa b-yistahagga* to be still at the initial stages, be still a beginner, as in *ſana lissa b-astahagga fis-siwaaqa* I've just started learning to drive. - ava *mistahaggi*.

ه د ء see ه د ى [3]

ه د ب

هدب *hidb* /n/ **1** /pl *hadadiib*/ fringe. **2**↑ /pl *ſahdaab*/ eyelash.

ه د د [1]

هدّ *hadd (i)* /vt/ **1** to demolish, wreck. **2** to undermine, weaken. *ſil-ḥuzn[a] hadd-a-ha* sorrow has ruined her health. *bi-yhidd il-ḥeel* it saps one's strength. - vn *hadd, hadad, hadadaan*; ava ***haadid***; pva *mahduud*.

اتهدّ *ſithadd* /vi/ **1** to be demolished, be wrecked. **2** to be undermined, be weakened. - iva *mithadd*.

انهدّ *ſinhadd* = *ſithadd*. - iva *minhadd*.

هدّد *haddid* /vt/ to threaten. *ſil-mudiir haddid-hum bil-xaṣm* the director threatened to dock their pay. - vn *tahdiid*; ava/pva *mihaddid*; pva *muhaddad*↑.

تهديد *tahdiid* /n pl *-aat*/ threat.

تهديدى *tahdiidi* /adj/ threatening.

اتهدّد *ſithaddid* /vi/ **1** to be threatened. *yaama ktiir ithaddidu bil-ɢatl* how many times they've been threatened with death! **2** to be intimidated, be cowed. *ſana m-athaddid-ſi min ḥadd* I'm not scared by anyone! - iva *mithaddid*.

ه د د [2]

هدّ *hidd* <Engl> /n pl *-aat*/ **1** record-player pick-up head. **2a** *[soccer]* play made with the head. **2b** blow with the head (in wrestling).

ه د ر [1]

هدر *hadar[1] (u)* /vt/ **1** to cause to fall, knock over. *hadart-u ɛal-ſarḍ* I knocked him to the ground. **2** to shed (blood) with impunity. - vn *hadr*; ava *haadir*; pva *mahduur*.

هدر *hudr* /n/ bad fall. *kalt[i] hudr* I took a tumble.

هدر *hadar[2]* /coll n/ scraps, left-overs, unwanted remnants. *hadar gild* scraps of leather. -/adjectivally/ *damm-u hadar* his blood may be shed with impunity, he's so insignificant no one would avenge his blood. -/adverbially/ *raaḥ hadar* to be wasted, come to nothing, as in *damm-u raaḥ hadar* his blood was shed in vain, *ḥaqq-i ma-yruḥ-ſi hadar* no one's going to trample on my rights!

اتهدر ʕithadar /vi/ **1** to tumble, fall down. **2** to be shed with impunity (of blood). - ava/iva *mithidir*.
انهدر ʕinhadar = ʕithadar. - ava/iva *minhidir*.
أهدر ʕahdar↑ /vt/ to invalidate, regard as invalid. *ʕihdaar ḥuquuq in-naas* transgression of the rights of the people. - vn *ʕihdaar*; ava *muhdir, mihdir*; pva *muhdar*.

ه د ر [2]
هدر hadar[3] *(u)* /vi/ to roar, bellow. *bi-yuhdur zayy il-baḥr* he's bellowing with rage. - vn *hadiir*; ava *haadir*.

ه د ر [3]
هدرة hidra /n pl *hidar, hidaar*/ bottom section of a rib (that part which forms the bottom of a wooden ship).

- ه د ر ل
هيدروليكى hidruliiki <Fr> /adj/ hydraulic.

- ه د ر م
هدروماتك hidrumaatik /n/ *[auto]* automatic transmission.

ه د ف
هدف hadaf /n pl *ʕahdaaf*/ **1** target. *ʕiṭ-ṭalqa ma-gat-ʃ[i] fil-hadaf* the shot missed the target. **2** aim, objective. *hadaf il-liʕba ʕeeh* what is the object of the game? *hadaf il-maʃruuʕ* the aim of the project. **3** *[sport]* goal (scored).
هدّاف haddaaf /n pl *haddaafa*/ **1** (also *haddaaf il-fariiq*) scorer or top scorer (in a team game). **2** bombardier.
هدّف haddif /vi/ *[sport]* to aim (well) at the goal, basket etc. *ʕil-laaʕib da bi-yhaddif bi-ḥarfana* ≈ this player is an expert scorer. - vn *tahdiif*; ava *mihaddif*.
استهدف ʕistahdif↑ /vt/ to select as a target. *ʕinta b-tistahdif-ni bik-kalam-da* do you mean that remark for me? - vn *ʕistihdaaf*; ava *mistahdif*.

ه د ل [1]
هدل hadal *(i)* /vt/ **1** to let down, let hang, dangle. *hadalit ʃaʕr-a-ha* she let down her hair. **2** to cut or chop down. *ʕihdil ḥitta kbiira min ig-gisr* cut down a large section of the bank. - vn *hadl, hadalaan*; ava *haadil*; pva *mahduul*.
هدلة hadla /pl *-aat*/ instance noun of *hadl*.
اتهدل ʕithadal /vi/ passive of *hadal*. - iva *mithidil*.
انهدل ʕinhadal = ʕithadal. - iva *minhidil*.
هدّل haddil /vt/ **1** to let down, allow to hang loosely. *labsa fustaan mihaddil ʕaleeha ka-ʕinnu miʃ bitaʕ-ha* she is wearing a dress so loose on her that it seems it may not be her own. **2** to cut or chop down repeatedly. *ʕit-turaab mihaddil fil-ḥufra* the earth has been cut away and is collapsing into the hole. - vn *tahdiil*; ava/pva *mihaddil*.
اتهدّل ʕithaddil /vi/ passive of *haddil*. - vn *tahaddul*; iva *mithaddil*.

ه د ل [2]
هديل hadiil /n/ cooing (of pigeons).

ه د م [1]
هدم hadam↑ *(i)* /vt/ to destroy, demolish. *ʕil-ḥariiqa hadamit il-beet* the fire destroyed the house. ‖*haadim il-lazzaat* death. - vn *hadm, hadamaan*; ava *haadim*; pva *mahduum*.
هدّام haddaam /adj/ destructive. *naqd[i] haddaam* destructive criticism.
اتهدم ʕithadam /vi/ to be destroyed, be demolished, fall into ruin. - ava/iva *mithidim*.
انهدم ʕinhadam = ʕithadam. - vn *ʕinhidaam*; ava/iva *minhidim*.
هدّم haddim /vt/ to destroy successively and extensively. *ʕil-ɣaara haddimit muʕẓam il-mabaani* the raid has destroyed most of the buildings. - vn *tahdiim*; ava/pva *mihaddim*.
اتهدّم ʕithaddim /vi/ to be successively and extensively destroyed. - iva *mithaddim*.

ه د م [2]
هدمة hidma /n pl *-aat, hidam*/ garment, piece of clothing. *xad il-hidma lli ʕalayya* ≈ he took even the shirt off my back.
هدوم huduum, hiduum /pl n/ clothes, clothing. ‖*raagil malw[i] hduum-u* a respected man. - *fi-nuṣṣ[i] hduum-u* extremely embarrassed.

ه د ن
هدنة hudna /n pl *-aat*/ truce, armistice.

ه د ه د
هدهد hudhud, hidhid /n pl *hadaahid*/ *[zool]* hoopoe.

ه د ى [1]
هدى hada[i] *(i)* /vt/ to guide, set on the right path (of God). *b-adʕi-lha ʕinn[i] rabb-i-na yihdii-ha* I pray that our Lord may guide her. *rabb-i-na yihdii-k* may our Lord guide you on the right path (often said in criticism). ‖*yihdii-k yirḍii-k* see *raḍa*. - vn *huda, hidaaya*; ava *haadi*; pva *mahdi*.

هادى *haadi*[1] /n/ Guider, as epithet of (1) God. ‖*lissa bi-yquul ya haadi* he's just getting started, he's just warming up. (2) the Prophet Muhammad.

هدية *hudya* /n pl *-aat, huday*/ rear driving-pole on a water-wheel (see Pl.E, 6).

اتهدى *ʔithada* /vi/ to be guided, be set on the right path (by God). - iva *mithidi*.

انهدى *ʔinhada* = *ʔithada*. - iva *minhidi*.

استهدى *ʔistahda* /vi/ to seek the right road. *ʔistahda bi-llaah w-balaaʃ xinaaq* ≈ ask God's guidance and stop fighting. ‖*lissa b-yistahda* to be just at the initial stages, as in *da ʔiḫna lissa ma-stahdenaa-ʃ fil-ʃakl* we haven't even started eating yet. - vn *ʔistihda*; ava *mistahdi*.

ه د ى [2]

هدى *hada*[2] *(i)* /vt/ to give (s.o.) a present (of). *ʔahdii-k ʔeeh* what shall I give you? - ava *haadi*.

هديّة *hidiyya, hadiyya* /n pl *-aat, hadaaya*/ gift. *ʔin-nabi ʔibil il-hidiyya* the Prophet accepted gifts (said in pressing a gift etc. upon someone). *kal il-hidiyya w-kasar id-diʔʔiyya [prov]* he took the present and broke the pot in which it was brought (of ungracious behaviour).

هادى *haada* /vt/ to give (s.o.) a pressent (of). *hadet-ha bi-ʔzaazit riiḫa* I presented her with a bottle of perfume. - vn *mihadiyya*; ava *mihaadi*.

اتهادى *ʔithaada* /vi/ **1** to exchange presents. **2** to be given presents. *fil-ʔafraaḫ yithaada l-ʕariis wil-ʕaruusa b-ṣuḫab il-ward* at weddings, the bridegroom and the bride are presented with bunches of flowers. - iva *mithaadi*.

أهدى *ʔahda*[1] /vt/ **1** to make a gift (of) (s.th.) to. *ʔil-hidiyya ʕala ʔadr*[i] *muhdii-ha [prov]* (the value of) a present reflects the value of the one who gives (not the value of the one to whom it is given, said in apologizing for the inadequacy of a gift). **2** to dedicate (a work). - vn *ʔihdaaʔ*; ava *mihdi, muhdi*.

إهداء *ʔihdaaʔ* /n pl *-aat*/ *[lit]* dedication.

ه د ى [3]

هدى *hidi (a)* /vi/ to become calm, abate, die down. *ʔin-naar hidyit* the fire abated. *bass*[i] *ʔihda w-baʕdeen nitkallim* just calm down and we'll talk afterwards. - vn *hadaawa, hadayaan, hidiww, huduuʔ*; ava *haadi*.

هادى، هادئ *haadi*[2] /adj */ calm. *raagil haadi* a quiet man. ‖ *ʔalwaan hadya* quiet colours. - *naar hadya* a low fire.

أهدأ، أهدى *ʔahda*[2], *ʔahdaʔ* /el/ quieter/quietest, calmer/calmest.

هدّأ، هدّى *hadda* /vt/ to calm down, quieten, cause to abate. *haddeet-u* I calmed him down. *haddi nafs-ak* (or *ʔaʕṣaab-ak* or *ʔaxlaaʔ-ak*) calm yourself! *haddit in-naar* she lowered the heat. *haddu l-liʕb* they slowed down the game. *ʔit-taks*[i] *hadda s-surʕa* the taxi slowed down. *haddi ya sawwaaʔ* slow down, driver! *haddit baal-i* (or *sirr-i*) she put my mind at ease. - vn *tahdiyya*; ava/pva *mihaddi*.

مهدّئ، مهدّى *muhaddi, muhaddiʔ* /n pl *-aat*/ tranquillizer, sedative.

اتهدّأ، اتهدّى *ʔithadda* /vi/ to be calmed down, be quietened, be abated. - iva *mithaddi*.

استهدى *ʔistahda* /vt/ **1** to consider (too) quiet. **2** to select for quietness. - vn *ʔistihda*; ava/pva *mistahdi*.

ه ا ذ ا see ه ا ز ا

ه ذ ب see ه ز ب

ه ذ ر see ه ز ر

ه ذ ى see ه ز ى

ه ر ء see ه ر ى

ه ر ب

هرب *hirib, harab (a)* /vi/ to escape, flee. *hirib bi-gild-u* he escaped with his skin. *ʔid-damm*[i] *harbaan min wiff-u* the blood has drained from his face. *bi-yihrab min iḍ-ḍaraayib* he's evading taxes. ‖*damm-i hirib* ≈ my blood ran cold. - vn *harab, huruub, harabaan*; ava *haarib*.

هربان *harbaan* /adj */ runaway, fugitive.

هربانجى *harabangi* /n pl *-yya*/ one given to evading work, responsibilities or commitments, shirker.

مهروب *mahruub: ʔil-maktuub ma-minnuu-ʃ mahruub [prov]* there can be no flight from Fate.

مهرب *mahrab* /n/ refuge, sanctuary.

هرّب *harrab* /vt/ **1** to smuggle. **2** to hide away. *miʃ mumkin tiharrab minni ḫaaga* she would never hide things from me. — /vi/ **3** to run down, go dead (of a battery). ‖*muxx-u harrab* he flipped his lid. - vn *tahriib*; ava/pva *miharrab*.

تهريبة *tahriiba* /n pl *-aat*/ **1** instance noun of *tahriib*. **2** consignment of smuggled goods. *tahriibit ḫaʃiiʃ* smuggled batch of hashish.

مهرّب *muharrib* /n */ smuggler. *muharrib muxaddaraat* drug smuggler.

اتهرّب *ʔitharrab* /vi/ to be smuggled. - vn *taharrub*; iva *mitharrab*.

¶ *ʔitharrab min*ʔ to get around, evade.

ه ر ب د

هربد *harbid* /vt/ to rip to pieces. *ʔil-kalb[i] harbid hiduum-i* the dog ripped my clothes to pieces. - vn *harbada*; ava/pva *miharbid*.

اتهربد *ʔitharbid* /vi/ to be ripped to pieces. - vn *tiharbiid*; iva *mitharbid*.

تهربيدة *tiharbiida* /inst n/ a ripping, a tearing.

ه ر ج

هرج *harag* /n/ muddle, confusion. ***harag wi-marag*** turmoil, chaos.

هرّج *harrag, harrig* /vi/ to fool around, clown about. *bi-yharrag fil-faṣl* he turns the classroom into a circus. - vn *tahriig*; ava *miharrag*.

¶ *harrag ʕala-* to overwhelm with noise, shout down. *harragt[a] ʕal-mudarris xalleet-u ma-yiʕraf-ʃ[i] ydarris* I kept interrupting and shouting at the teacher and made him unable to teach.

مهرّج *muharrig* /n */ clown.

اتهرّج *ʔitharrag* /vi/ (impersonal) passive of *harrag*. *saaʕit ma yitharrag ʕalee ma-yiʕraf-ʃ[i] yitkallim* whenever there is an attempt to shout him down he (loses his composure and) can't manage to speak coherently. - iva *mithårrag*.

ه ر ج ل

هرجل *hargil* /vt/ to mess up, put into disarray. *ʔiṭ-ṭabuur maaʃi mhargil* the queue is moving in a disordered fashion. *ʔil-muwaẓẓaf ig-gidiid hargil if-fuṣl[i] xaaliṣ* the new employee messed up the work completely. - vn *hargala*; ava/pva *mihargil*.

اتهرجل *ʔithargil* /vi/ to be messed up, be put in disarray. - iva *mithargil*.

ه ر د م

هردم *hardim* /vt/ to ruin, tear down, destroy. *ʔiz-zilzaal hardim il-mabaani* the earthquake tore down the buildings. - vn *hardama*; ava/pva *mihardim*.

اتهردم *ʔithardim* /vi/ to be ruined, be torn down, be destroyed. - vn *tihardiim*; iva *mithardim*.

تهرديمة *tihardiima* /pl *-aat*/ instance noun of *tihardiim*.

ه ر ر [1]

هرّ *harr (u) [coarse]* **1** /vt/ to pass as diarrhoea. *harr illi kal-u* he passed all he had eaten. ‖*harreet barabra* ≈ I shat bricks (with fright). **2** /vi/ to have diarrhoea, have the trots. - vn *harr, hararaan*; ava *haarir*; pva *mahruur*.

هرّة *harra* /inst n, pl *-aat*/ a passing of diarrhoea. ‖ *ʕabu harra [coarse]* ≈ spineless coward, pants-shitter.

هرار *huraar, hiraar* /n/ *[coarse]* diarrhoea, squitters.

هرّار *harraar* /adj/ **1** allowing a free flow. *manxul harraar [rur]* sieve too coarse to catch the particles that should be separated out. **2** cowardly.

هرّر *harrar* /vt/ *[coarse]* to cause to shit (especially with fear). *ʔil-ʕalqa harrarit-u ʕala rooḥ-u* the beating had him shitting in his pants. - *tahriir*; ava *miharrar*.

ه ر ر [2]

هرّ *hirr: ʕeen il-hirr* tiger-eye (stone).

ه ر س [1]

هرس *haras (i)* /vt/ to crush. *ʔiṭ-ṭaʕmagi bi-yihris il-fuul* the *ṭaʕmiyya* maker mashes the broad beans. *xuḍaar mahruus* puréed vegetables. - vn *hars*; ava *haaris*; pva *mahruus*.

هرسة *harsa[1]* /pl *-aat*/ instance noun of *hars*.

هريسة *hariisa* /n/ any of a number of sweet confections made with flour, clarified butter, and sugar (also, sometimes, nuts, coconut etc.).

هرّاس *harraas* /n pl *-aat*/ roller (especially a road roller).

هرّاسة *harraasa = harraas*.

مهراس *mihraas, mihraas* /n pl *mahariis*/ large pestle (especially for large amounts of spices or broad beans). - also, a surface upon which the material to be crushed is placed.

اتهرس *ʔitharas* /vi/ to be crushed. *ṣawabʕ-i tharasit fil-baab* my fingers were crushed in the door. - iva *mithiris*.

اتهرس *ʔinharas = ʔitharas*. - iva *minhiris*.

ه ر س) [2]

هرسة *harsa* <prob Fr *herses*> /n/ *[theat]* fly light(s).

هرسة *harsa[2]↓* /n/ *[path]* bilharziasis.

ه ر ش

هرش *haraʃ (u)* /vt/ **1** to scratch (to satisfy an itch). ‖*harafuu fi-ʕaʃara gneeh* they touched him for ten pounds. - *ʔuhruf fi-geeb-ak* scratch in your pocket (and find something for me). - *harafuu harfa* they gave him a good beating. - *haraft-a-ha ʠabl[i] ma ylabbisuu-ni maʠlab* I caught on to it before they could trap me. - *harafuu-lu muxx-u* they drove him around the bend. - *harf[i] ʕidda* wear and tear on tools. - *kutr il-harf[i] yṭallaʕ il-bala [prov]* (much scratching gets rid of mange) any problem can be solved by perseverance. **2** to bribe. - vn *harf, harf, harafaan*; ava *haarif*; pva *mahruuf*.

هرش *harf* /n/ *[path]* ringworm.

هرّاشة *harraaʃa* /n pl *-aat*/ backscratcher.
مهرشة *mahraʃa* /n pl *-aat*/ backscratcher.
اتهرش *ʔitharaʃ* /vi/ passive of *haraʃ*. - iva *mithiriʃ*.
انهرش *ʔinharaʃ* = *ʔitharaʃ*. - iva *minhiriʃ*.
اتهرّش *ʔitharraʃ* /vi/ to scratch oneself extensively and vigorously. - ava *mitharraʃ*.

ه ر ش م
هرشم *harʃim* /vt/ to cause an injury to (the face or part of it). *harʃimt*^{i} *manaxiir-u* I gave him a bloody nose. - vn *harʃama*; ava/pva *miharʃim*.
اتهرشم *ʔitharʃim* /vi/ passive of *harʃim*. - iva *mitharʃim*.

ه ر ق
هرّق *harraq* /vi/ **1** to laugh loudly. *ma-tharraq-ʃ*^{i} *fid-diħk*^{i} *la-yismaɛuu-k* don't laugh so loudly lest they hear you. **2** to make fun, make a laughing-stock (of s.o. or s.th.). *qaɛadu yharraqu ɛas-sitt il-ɛaguuza* they went on making fun of the old woman. - vn *tahriiq*; ava *miharraq*.
اتهرّق *ʔitharraq* /vi/ (impersonal) passive of *harraq*. *muʃ ʃana lli yitharraq ɛalee* I am not one to be laughed at. - iva *mitharraq*.

ه ر ك
هرك *harak (u)* /vt/ to mash. *baṭaaṭis mahruuka* mashed potatoes. - vn *hark*; ava *haarik*; pva *mahruuk*.
اتهرك *ʔitharak* /vi/ to be mashed. - iva *mithirik*.
انهرك *ʔinharak* = *ʔitharak*. - iva *minhirik*.

ه ر م [1]
هرم *haram* /n pl *ʔahraam, ʔahramaat*/ pyramid. ‖ *ʔil-haram* (1) the Pyramids of Guiza. (2) area between Guiza Square and the Pyramids. *ʔiħna sakniin fil-haram* we live out near the Pyramids. - *ʔibn il-haram [obsol]* epithet for an Egyptian. - *lamma l-haram yitħarrak min maṭraħ-u* when the pyramid is moved from its place (i.e., never).
هرمي *harami* /adj/ pyramidal.
مهرّم *miharram* /adj/ pyramid-shaped.

ه ر م [2]
هرمة *hirma* /fem adj/ old and seedy (of a woman). *ya ʔibn il-hirma* ≈ you son of a filthy old hag!

ه ر م و ن
هرمون *hurmoon* <Engl> /n pl *-aat*/ hormone.

ه ر م ي س
هرميس *harmiis* /n pl *haramiis*/ vertical axle of the main cog of the *saqya* (see Pl.E, 4).

ه ر ن
هرن *hurn* <Engl *horn*> /n pl *-aat*/ bell (of a wind instrument).

ه ر ه ر
هرهر *harhar* /vi/ **1** *[coarse]* to pass diarrhoea, squitter. **2** to wobble, shake (of flabby flesh). - vn *harhara*; ava *miharhar*.

ه ر و ل
هروّل *harwil* /vi/ to walk fast, half run. - vn *harwala*; ava *miharwil*.
هرولة *harwala* /n/ quick pace.
مهروّل *miharwil* /adj */ loose and ill-fitting (of a garment).

ه ر ى
هرى *hara (i)* **1** /vt/ to cause to disintegrate. *ʔil-ɣaliyya harit il-huduum* boiling wore out the clothes. *harit il-ɛeef lil-firaax* she crumbled the bread for the chickens. ‖ *bis-simm il-haari* ≈ may it do you harm! (said on parting with something, especially food, very reluctantly). - *ɛiyaṭ-ha hara ʔalb-i* ≈ her crying tore into my heart. - *nizil fiyya ʃtiima lamma hara badan-i* ≈ he went on insulting me till I couldn't bear it any longer. **2** /vi/ to feel agitated, fume. *xallii yihri w-yinkut* let him eat his heart out (with frustration). *hara f-badan-u* he fumed with anger. - vn *hary, harayaan, hariyya*; ava *haari*; pva *mahri*.
هرية *harya* /pl *-aat*/ instance noun of *hary*.
اتهرى *ʔithara* /vi/ **1** to disintegrate. **2** to be made to disintegrate. - ava/iva *mithiri*.
انهرى *ʔinhara* = *ʔithara*. - ava/iva *minhiri*.

ه ر و ى ن
هيروين *hiruwiin* <Fr> /n/ heroin.
هورايين *hurayiin* = *hiruwiin*.

ه ذ ى see ه ز ى

ه ز ء
هزأ *haza ʔ (a)* /vi/ to behave disdainfully, behave scornfully (towards s.o.). *dayman yihza ʔ bi-mraat-u quddaam in-naas* he always treats his wife with contempt in public. - vn *huz ʔ, haza ʔaan*; ava *haazi ʔ*.
هزؤ *huzu ʔ* /adj invar/ insignificant, contemptible, open to ridicule.

أهزأ ʕahzaʔ /el/ more/most insignificant, contemptible etc.
هزوّة *huzuʔʔa* /adj invar/ *[slang]* = *huzuʔ*.
مهزأة *mahzaʔa* /n/ scorn, ridicule.
هزّأ *hazzaʔ* /vt/ to belittle, cut down to size. *hazzaʔit-ni f-wisṭ in-naas* she humiliated me in front of everyone. - vn *tahziiʔ*; ava *mihazzaʔ*.
مهزّأ *muhazzaʔ* /adj */ inspiring scorn and contempt. *raagil muhazzaʔ fil-ḥitta kull-a-ha* a man looked down on by the whole neighbourhood.
اتهزّأ *ʔithazzaʔ* /vi/ to be belittled, be cut down to size. *ʔithazzaʔna fil-matʃ* we were trounced thoroughly in the match. - iva *mithazzaʔ*.
أستهزأ *ʔistahzaʔ* /vi/ **1** to assume insignificance (of s.o.). **2** = *hazaʔ*. - vn *ʔistihzaaʔ*; ava *mistahzaʔ*.

ه ز ب
هذّب *hazzib* /vt/ **1** to give (s.o. or s.th.) polish or finish. *hazzib ʔaxlaaq-ak* smarten up your manners! **2**↑ to trim (the edges of s.th.), even up. *xalli l-mizayyin yihazzib faɛr-ak ʃiwayya* get the barber to trim your hair a bit! - vn *tahziib*; ava *mihazzib*.
مهذّب *muhazzab* /adj */ decent, respectable. *raagil muhazzab* a decent man. *muɛamla muhazzaba* polite treatment.
اتهذّب *ʔithazzib* /vi/ passive of *hazzib*. - iva *mithazzib*.

ه ز ر
هزار *hizaar* /n/ frivolity, fooling around. *ʔif-fuṛl[i] miʃ hizaar* work is no occasion for fooling around.
هزّر *hazzar* /vi/ to be frivolous, fool around. *da-ḥna b-nidḥak maɛaaki w-bi-nhazzar* we are just having a laugh with you and joking around. - ava *mihazzar*.

ه ز ز
هزّ *hazz (i)* /vt/ **1** to shake. *hazz[i] raas-u* he shook his head. *b-ahizz[i] nafs-i ɛal-kursi* I rock myself in the chair. ‖*hazz[i] wisṭ-(u)* to belly-dance. - *hizz[i] ʧuul-ak [abus]* get a move on! - *hizz[i] ya wizz* ≈ shake it baby! - *bi-yhizz-i-lu l-ɋawuuɋ* he doffs his cap to him (with excessive deference). **2** to shock, upset. *ʔil-xabar da hazz-i-na* the news shook us. **3** to sift (grain). - vn *hazz, hazazaan*; ava *haaziz*; pva *mahzuuz*.
هزّة *hazza* /inst n, pl *-aat*/ a shake, a tremor. *hazzaat ʔarḍiyya* earth tremors.
مهزوز *mahzuuz* /adj */ shaken, shaky. ‖*da raagil mahzuuz fi-fuṛl-u* ≈ he is a failure in his work. - *muxx-u mahzuuz* he's nutty!
هزازة *hizaaza* /n/ **1** chaff. **2** that which remains in a sieve after sifting.
هزّاز *hazzaaz* /adj/ **1** shaking, swaying. *kursi hazzaaz* rocking chair. *ḥamaam hazzaaz* pouter pigeon. — /n pl *-aat*/ **2** vibrator. ‖*hazzaaz xaraṣaana [constr]* cement mixer. **3** springboard.
اتهزّ *ʔithazz* /vi/ to be shaken, tremble. *markaz-i thazz* my position was shaken. *ma-thazzit-lii-ʃ faɛra* I didn't turn a hair. - ava/iva *mithazz*.
انهزّ *ʔinhazz* = *ʔithazz*. - ava/iva *minhazz*.
اهتزّ *ʔihtazzʔ* /vi/ to shake, vibrate. ‖*ʔihtazz[i] min il-ḥadsa* he was shaken up by the accident. - vn *ʔihtizaaz*; ava *mihtazz, muhtazz*.

ه ز ل [1]
هزل *hazal[1] (i)* /vt/ to cause to lose weight, make lean. *ɛayaa-ha l-muzmin hazal-ha* her chronic illness made her thin. - vn ***huzaal, hazalaan***; ava *haazil*; pva *mahzuul*.
هزل *hazal[2]* /n/ weakness, debility.
هزال *huzaal* /n/ weakness, debility.
هزلان *hazlaan* /adj */ weak, debilitated.
هزيل *haziilʔ* = *hazlaan*.
اتهزل *ʔithazal* /vi/ to lose weight, be made or become lean or emaciated. ‖*yaɛni ḥa-tihizil ʔaw gibt il-ʔakl[i] l-nafs-ak* do you think it would hurt you if you were to get your own food! - ava/iva *mithizil*.
انهزل *ʔinhazal* = *ʔithazal*. - ava/iva *minhizil*.

ه ز ل [2]
هزل *hazl* /n/ fun, joking, jesting. *di masʔala gadd[i] wi-kfayaa-k hazl[i] fiiha* ≈ stop making fun of this case, it is a serious one!
هزلى *hazli* /adj/ farcical, comical. *masraḥiyya hazliyya* a farce, farcical play.
هزلت *hazulat* /interj/ what a pass things have come to! now I've seen it all! as in *w-allaahi hazulat lamma ḥaqrit-ak baqeet tikallim-ni bif-fakl-i-da* things have reached a fine state when you come and speak to me like that!
مهزلة *mahzala* /n pl *mahaazil*/ farce, farcical situation.

ه ز م
هزم *hazam (i)* /vt/ to defeat. *hazamuu-na fil-matʃ* they defeated us in the match. ‖*haazim il-lazzaat* death. - vn *hazm, hazamaan*; ava *haazim*; pva *mahzuum*.
هزيمة *haziima* /n pl *hazaayim*/ defeat. *rooḥ il-haziima* defeatism.
اتهزم *ʔithazam* /vi/ to be defeated. - iva *mithizim*.
انهزم *ʔinhazam* = *ʔithazam*. - iva *minhizim*.
انهزامى *ʔinhizaamiʔ* /adj */ defeatist.

ه ز ه ز

هزهز *hazhiz* /vt/ to shake. *bi-thazhiz il-ɛayyil fi-ḥigr-a-ha* she dandles the baby on her lap. - vn *hazhaza*; ava/pva *mihazhiz*.

اتهزهز *ʕithazhiz* /vi/ to be shaken, shake or tremble. *ʕil-ɛayyil yiḥibb[i] yithazhiz* the child likes to be dandled. *mafya tithazhiz* she wiggles as she walks. *bi-yithazhiz ɛak-kursi* he rocks back and forth in the chair. - ava/iva *mithazhiz*.

ه ز ى

هذى *haza (i)* /vi/ to rave, talk deliriously. - vn *hazayaan*; ava *haazi*.

ه س س

هسّ *hass (i)* /vi/ **1** to hiss. **2** to shut up, comply with a command to shut up. *saaɛit ma ʕaqul-lak huss[i] thiss[i] ṭawwaali* as soon as I tell you to shut up, you shut up! ‖*ma-fii-f bass[i] wala hass* ≈ shut up yourself! (retort to one who says *huss*). - vn *hass, hasasaan*; ava *haasis*.

هسّ *huss* /interj/ shush! hush!

هسّ *hiss* /interj/ whoa! (to stop, slow down, or calm an animal).

ه ش ش[1]

هشّ *haff[i] (i)* /vt/ to drive away (flies or birds). *hiff id-dibbaan min ɛala wiff-ak* shoo the flies off your face! ‖*la yhiff[i] wala yniff* ≈ he's good for nothing, he can't do anything. - vn *haff, hafafaan*; ava *haafif*; pva *mahfuuf*.

هشّ *hiff* /interj/ **1** shoo! (said when driving off flies or birds). **2** whoa! (to stop, slow down or calm an animal).

اتهشّ *ʕithaff* /vi/ to be driven away (of flies or birds). - iva *mithaff*.

انهشّ *ʕinhaff* = *ʕithaff*. - iva *minhaff*.

ه ش ش[2]

هشّ *haff[2]* /adj */ delicate, fragile. *ʕil-ɛaḍm[i] btaɛ-ha haff* its bones are fragile.

ه ش ك

هشّك *hiffik: hiffik hiffik* interjection indicating pleasure in the presence of dancing, revelry or the like.

هشّك *haffik* /vt/ to dandle (a child). - vn *tahfiik*; ava/pva *mihaffik*.

اتهشّك *ʕithaffik* /vi/ to be dandled (of a child). - iva *mithaffik*.

ه ش م

هاشم *haafim* /prop n/ male given name. *ʕumm" haafim* epithet of Sayyida Zaynab.

هشم *haffim↑* /vt/ to smash, crush. - vn *tahfiim*; ava/pva *mihaffim*.

اتهشم *ʕithaffim↑* /vi/ to be smashed, be crushed. - vn *tahaffum↑*; iva *mithaffim*.

ه ض م

هضم *haḍam (i)* /vt/ to digest. *miɛdit-i mif ɋadra tihḍim il-ʕakl id-dasim* my stomach cannot digest rich food. *haḍam id-dars* he inwardly digested the lesson, he took the lesson to heart. ‖*ma-niɋdar-ʃ[i] nihḍim il-mudiir* we can't stomach the director. - *ʕir-raagil da haaḍim ḥaqq-i* that man has gobbled up my rights. - vn *haḍm*; ava *haaḍim*; pva *mahḍuum*.

اتهضم *ʕithaḍam* /vi/ to be digested. ‖ *ʕir-raagil da ma-yithiḍim-ʃ* that man is insufferable. - iva *mithiḍim*.

انهضم *ʕinhaḍam* = *ʕithaḍam*. - iva *minhiḍim*.

هضّم *haḍḍam* /vt/ to cause to digest. *ʕid-dawa da yhaḍḍam il-ʕakl* this medicine aids digestion of food. - ava *mihaḍḍam*.

مهضّم *muhaḍḍim* /n pl *-aat, -aat*/ digestive.

ه ض و م

هاضومة *haḍuuma* /n pl *hawaḍiim*/ large chunk (of meat). - also *hanḍuuma*.

ه ط ل

هطّل *haṭṭal* /vi/ to be slow and weak, be slack and indisciplined. *bi-yhaṭṭal fi-mafyit-u* he ambles awkwardly along. *bi-yhaṭṭal fi-kalaam-u* he rambles on when he talks. *mihaṭṭal fi-libs-u* sloppy in his dress. - vn *tahṭiil*; ava *mihaṭṭal*.

ه غ م ى

هيغومينوس *hixumeenus* <Gr *hêgoumenos*> /n/ *[Chr]* hegumen. - also *ʕixumeenus*.

ه ف ا ن

هافانا *havaana, havaana* <Fr *havane*> /adj invar/ light brown.

ه ف ء see ه ف ى

ه ف ت

هفت *hifit (a)* /vi/ to become weak or exhausted (from hunger or the like). *ʕana hfitt[i] mig-guuɛ* I felt spent from hunger. - vn *hafataan*; ava *haftaan*.

هفتان *haftaan* /adj */ weak, spent, exhausted, faint (from hunger), starved.

هفّت *haffit* **1** /vt/ to make weak or exhausted.

ʔiṣ-ṣiyaam iṭ-ṭawiil bi-yhaffiṭ-ni long fasting exhausts me. **2** /vi/ = *hifiṭ*. - vn *tahfiiṭ*; ava/pva *mihaffiṭ*.
اتهافت *ʔithaafiṭ* /vi/ to flock, crowd, rush together. *ʔiṭ-ṭubbaan bi-yithaftu ɛala s-sinima* the kids fall over one another to get into the cinema. - ava *mithaafiṭ*.

ه ف ط ا –
هفطايم *hafṭaayim* <Engl> /n/ **1** half-time (in a match). **2** (also *ṭaayim*) half (in a match). *ʔil-hafṭaayim il-ʔawwalaani* the first half.

ه ف ف [1]
هفّ *haff (i)* /vi/ **1** to blow past, pass quickly by. *ʔil-hawa haff* a gust of wind came. *haffit ɛaleena riiḥit kabaab* we caught a whiff of kebab. — /vt/ **2** to appropriate quickly for oneself. *haff il-ɡirfeen wi-mifi* he snaffled the money and went off. *nizlu haff[i] fil-ʔakl* they set upon the food greedily. ‖*haffeet mifwaar wi-rgiɛt* I popped out on an errand and came back. - *haffeena sandawitʃeen fis-sikka* we snatched a couple of sandwiches on the way. - *haff-i-lu saɛteen fil-maktab* he snatched a couple of hours in the office. **3** to give a quick going-over to. *haffit il-ʔooḍa* she gave the room a quick sweep round. *haffeet daɡn-i wiff* I gave myself a quick once-over with the razor. **4** to assail with, set upon with. *haff-i-ni ɡalam* he up and slapped me. *haffeet-u ʔinzaar* I gave him a warning. - vn *haff, hafafaan*; ava *haafif*; pva *mahfuuf*.
¶ *nifs-(u) haffiṭ-(u)* or *mazaag-(u) haff-(u)* to have a sudden yen or a desire. *nifs-i haffiṭ-ni ʔaruuḥ ʔiskindiriyya* I had a whim to go to Alexandria. *nifs-a-ha haffiṭ-ha ɛala kaasit dandurma* she had a sudden yen for a dish of ice cream. - *haff[a] ɛala* to make (s.o.) nostalgic. *ʔil-balad haffiṭ ɛalayya* I became nostalgic for my home town.
هفّة *haffa* /pl *-aat*/ instance noun of *haff*. ‖*gaṭ-li haffa* I was taken by a (crazy) whim. - *da raagil haffa* he is a man of odd mentality.
مهفوف *mahfuuf* /adj * and pl *mahafiif*/ touched in the head, odd.
أهفّ *ʔahaff* /el/ more/most touched in the head or odd.
اتهفّ *ʔithaff* /vi/ passive of *haff*. ‖ *ʔithaff[i] f-muxx-u* he became slightly touched, he went a bit strange. - iva *mithaff*.

ه ف ف [2]
هفّ *huff* /interj/ **1** sound of blowing out a fire or cooling off a hot object. *ɡaal huff[i] ṭafa l-lamba* he puffed out the lamp. **2** expletive expressing briefness. *huff[i] ṭiliɛ in-nahaar* and in as short a time as it would take to say *huff*, the day dawned!

ه ف ق
هفق *hafaq* /adj invar/ insignificant, of no worth or substance. *ʔabadan ma-tsammi-hum-ʃ[i] riggaala - dool hafaq* never call them men, they're trash!

ه ف ن see ه ف أ ن : *havaana, havaana*

ه ف ه ف
هفهف *hafhif, hafhaf* /vi/ to billow. *ʔil-hawa b-yxalli l-fustaan yihafhif* the wind makes the dress billow out. *faɛr-a-ha l-ḥariir bi-yhafhif ɛala wiff-a-ha* her silken hair wafts about her face. - vn *hafhafa*; ava *mihafhif*.
هفهاف *hifhaaf* /adj/ thin and fine. *ʔifoon hifhaaf* filmy chiffon.

ه ف و
هفوة *hafwa↑* /n pl *hafawaat*/ slip, error. *samiḥ-ni di kat hafwa minni ɣaṣb[a] ɛanni* forgive me, it was a mistake I made unwillingly.

ه ف ي
هفيّة *hafiyya* /masc and fem adj, pl *hafaaya*/ insignificant, light-weight (of people). *ʔaxuu muḥtaram wi-lii ɡiima laakin huwwa hafiyya* his brother is respected and has some position in society, whereas he himself is a nobody.
استهفا *ʔistahfa* /vt/ **1** to consider worthless and insignificant, belittle. **2** to select (s.o.) for worthlessness. *ʔistahfit laha raagil wi-gawwizit-u ʔuxt-a-ha l-fasdaana* she found a submissive little nobody and got him to marry her flighty sister. - ava *mistahfi*.

ه ق ق
هقّ *haqq (u)* /vi/ to slouch, skulk, slink. *maafi yhuqq* slouching along. *kutr[i] haqq-u ḥawaleeha xalla k-kalaam yiktar ɛaleeha* his hanging around her so much set people's tongues wagging about her. - vn *haqq*; ava *haaqiq*.

ه ك ذ ا see ه ا ك ز ا : *hakáza*

ه ك ع
هكّع *hakkaɛ* /vi/ to grow old and feeble. *hiyya bi-tfaḍḍal taaxud ir-raagil il-mihakkaɛ da ɛafaan fuluus-u* she would rather marry this decrepit old man

because of his money. *ʕil-ɣarabiyya hakkaɛit* the car has become very old and dilapidated. - vn *tahkiiɛ*; ava *mihakkaɛ*.

ه ك ك

هكّ *hakk (u)* /vi/ to stagger from weakness. *ħuṣaan taɛbaan maafi yhukk* a sick horse barely able to stagger along. *ṣabiyya tɛiif ʕizzaay maɛa ɛaguuz yihukk* how can a young girl live with a decrepit old man? - vn ***hakk***; ava *haakik*.

ه ك م

اتهكّم *ʕithakkimˀ* /vi/ to behave scornfully (towards s.o. or s.th.), pour ridicule (upon s.o. or s.th.). - vn *tahakkum*; ava *mithakkim*.

ه ل

هل *hal* interrogative particle. *hal ik-kalam-da ṣaħiiħ* is that true? *hal il-walad da ħa-yingaħ* will this boy succeed? *laazim tifuuf hal humma naas kuwayyisiin walla laʕ* you must find out whether or not they are good people. *ɛayziin niɛraf hal huwwa ħa-yiigi walla laʕ* we want to know whether he is coming or not. *ya hal tara* I wonder.

[1] ه ل ب

هلب *hilb* /n pl *hilíba, ʕahlaab*/ **1** grapnel anchor. **2** meat hook.

هلّب *hallib* /vt/ to pick up (money) from here and there in a dishonest way. - vn *tahliib*; ava *mihallib*.

اتهلّب *ʕithallib* /vi/ passive of *hallib*. - iva *mithallib*.

[2] ه ل ب

مهلّبيّة *mahallabiyya* /n/ blancmange (often flavoured with vanilla or rose water). - /adjectivally/ *bint[i] mhallabiyya* a dish of a girl.

ه ل ب ت ت

هلبتّ *halbatt* <perh T *hélbet* from Ar *ʕal-batt*> /adv/ probably, possibly. *ʕil-ʕutubiis miʃ bayin-lu ʕasar - halbatt[i] ħa-nuqaf lil-maɤrib* there's no sign of the bus; we may well have to stand here till sunset. *miʃ raaqi yxallaṣ il-waraq - halbatt[i] ykuun ɛayiz-ni ʕana ʕaɛmil-u* he's not willing to finish off the papers; he probably wants me to do them.

ه ل ت

هلت *halt* <Engl> /n pl *-aat*/ *[obsól]* halt, small railway station.

[1] ه ل س

هلس *hals* /n/ **1** wenching, debauchery. **2** *(kalaam) hals* empty talk, nonsense.

هلّاس *hallaas* /n * and pl *hallaasa*/ **1** libertine, profligate. **2** braggart.

هلّس *hallis* /vi/ **1** to go wenching, go in search of debauchery. **2** to talk nonsense. - vn *tahliis*; ava *mihallis*.

مهلّساتى *mihallisaati* /n pl *-yya*/ libertine, profligate.

[2] ه ل س see ه ل ل و س: ***halluus***

ه ل ش see ه ل ل و س: ***halluuf***

ه ل ض م

هلضم *halḍam* /vi/ **1** to mumble, mutter. **2** to talk drivel, talk nonsense. — /vt/ **3** to appropriate for oneself, bag. *ʕayy[i] mablaɤ yiigi ţaraf-u yhalḍam-u* any sum of money that comes his way he snaffles. - vn *halḍama*; ava *mihalḍam*.

هلضام *hilḍaam* /adj pl *haladiim, hilḍaama*/ **1** given to senseless talk. *ma-tismaɛ-luu-ʃ kalaam da ţuul ɛumr-u hilḍaam* don't listen to him - he always talks nonsense. **2** evasive, slippery.

ه ل ف و ت

هلفوت *halfuut* /adj pl *halafiit*/ worthless. *walad halfuut* a feckless youth.

[1] ه ل ك

هلك *hilik (a)* /vi/ to be exhausted, be consumed. *hilikt[i] miʃ-fuɤl* the work has worn me out. ‖*fuɤl it-tamriiq da halaak* nursing is hell! - vn *halaak*; ava *halkaan*.

هلك *halak (i)* /vt/ to exhaust, consume. *ʕil-ħuzn[i] halak-ha* sorrow has worn her out. *halak il-filuus kull-a-ha* he spent every penny of the money. - vn *halk, halakaan, halaak*; ava *haalik*; pva *mahluuk*.

هلكان *halkaan* /adj */ spent, exhausted, worn out, consumed.

هالك *haalik* **1** /adj */ *[Isl]* mortal. *kull[i] ʃeeʕ haalik ʕilla wagh allaah* everything is transient except for God. ‖*ya haalik* you infidel! - *min haalik li-maalik* from bad to worse. **2** /coll n/ (industrial) waste.

هلوك *haluuk[ˈ]* = *haluuki*.

هلوكى *haluuki* /n pl *-yya, halukiyyiin*/ squanderer, extravagant spender.

مهالك *mahaalik* /pl n/ fatal calamities, death-bringing disasters. *ya munaggi min il-mahaalik* O Rescuer from death! (invocation uttered on witnessing an accident or the like).

اتهلك ʔithalak /vi/ to be or become exhausted. - ava/iva *mithilik*.

هلّك *hallik* /vt/ to exhaust, consume utterly. *hallik-na mid-diḥk* he has almost killed us with laughter. - ava/iva *mihallik*.

اتهلّك ʔithallik /vi/ to be exhausted, be utterly consumed. - iva *mithallik*.

استهلك ʔistahlik, ʔistahlak /vt/ **1** to consume, use up. *bi-nistahlik itneen ṭinn*^{i} *zeet fil-yoom* we consume two tons of oil per day. **2** *[finan]* to amortize (a debt etc.). - vn *ʔistihlaak*; ava/pva *mistahlik*; pva *mustahlak*.

استهلاكى ʔistihlaaki /adj/ pertaining to consumption. *gamɛiyyaat istihlakiyya* consumer co-operatives.

مستهلك *mustahlik* /n */ consumer.

مستهلك *mustahlak* /adj/ not fit for use, used up. *ɛarabiyya mustahlaka* worn-out car. *sagaayir mustahlaka [joc]* lousy cigarettes.

^{2} ه ل ك

هالوك *haluuk*^{2} /coll n/ *[bot]* broom-rape, a weed parasite on various crops (especially broad beans and tomatoes).

^{1} ه ل ل

هلّ *hall (i)* /vi/ to appear, reach its season, start. *ʔif-fahr illi yhill* the coming month. *ʔil-baṭṭiix hallit baʃayr-u* the early-ripened melons started appearing (on the market). *saaɛit ma thill*^{i} *thill il-maṣaayib maɛaak* disasters befall (us) as soon as you show up. ‖*hall*^{i} *hlaal-ak ya ramaḍaan* welcome, O month of Ramadan! - *hall*^{i} *hlaal-ak* (or *nuur-ak*) your crescent (or light) has appeared! (welcoming someone after a long absence). - vn *halalaan*; ava *haalil*.

هلال *hilaal* /n pl *ʔahilla*/ **1** crescent moon. **2** crescent (shape). *ʔil-hilaal il-ʔaḥmar* the Red Crescent. **3** *bani hilaal* the Beni Hilal, a North African Arab tribe, being the tribe of Abu Zayd el-Hilali.

هلالى *hilaali* /adj/ **1** pertaining to the crescent moon. *fahr*^{i} *hlaali* a lunar month. **2** crescent-shaped. *fatḥa hilaliyya* a crescent-like aperture. **3** pertaining to *bani hilaal*. *ʔabu zeed il-hilaali* warrior hero of a folk epic. *ʔis-siira l-hilaliyya* the folk epic of which Abu Zayd el-Hilali is the hero.

الهلاليّة ʔil-hilaliyya /coll n/ the people of the tribe of Beni Hilal.

استهلّ ʔistahall /vt/ to begin, start. *ʔistahall*^{i} *xuṭbit-u bif-fiɛr* he started his speech with poetry. - vn *ʔistihlaal*; ava *mistahall*.

مستهلّ *mustahall* /n/ beginning, start, introduction. *kaan mustahtir fi-mustahall*^{i} *fabaab-u w-dilwaqti baɛa raagil mas*ʔ*uul* he was reckless in his early youth, but now he has become a man of responsibility.

^{2} ه ل ل

هلّيلة *hulleela* /n pl *-aat*/ scene, row. *ɛamalit-li hulleela* she made a scene with me.

هلّولة *halluula* = *hulleela*.

هلّل *hallil* /vi/ **1** *[Isl]* to say *la ʔilaaha ʔilla llaah*. **2** to cheer, vociferate in approval. *baɛd*^{i} *ma xallaṣit il-kubleeh in-naas kull-a-ha hallilit* when she finished the verse, everyone broke into a storm of applause. **3** to make a scene, kick up a row. *balaaʃ tuqɛud tihallil ʔaḥsan tilimm*^{a} *ɛaleena n-naas* don't go on making a scene or everyone will gather around us. - vn *tahliil*; ava *mihallil*.

اتهلّل ʔithallil /vi/ **1** to be delighted, rejoice, light up (with joy). *bi-mugarrad ma ʃafit-u wiff-a-ha thallil bil-faraḥ* as soon as she saw him, her face beamed with delight. **2** (impersonal) passive of *hallil*. *yaama thallil-lu ʃamma kaan rayyis ɛaleehum wi-dilwaqti nasa* how much he was cheered when he was their boss, now he's forgotten! - vn *tahallul*; ava/iva *mithallil*.

^{3} ه ل ل

هلّا *halla*^{2} /interj/ how wonderful! *halla halla ɛal-gadd*^{i} *wil-gadd*^{i} *halla halla ɛalee* three cheers for seriousness! (expression of appreciation of, and exhortation to, seriousness).

^{4} ه ل ل see ء ل ه : *halla*^{1}

ه ل ل و س

هلّوس *halluus* (also *halluuf*) <Copt> /n/ **1** type of pondweed. **2** /coll n/ cobwebs.

ه ل م م

هلّم *halumma* /adj invar/ very abundant, very numerous. *filuus halumma* masses of money. *naas halumma* masses of people. ‖*wi-halumma garra* and so on, et cetera.

ه ل ن د

هولاندا *hulanda* /prop n/ Holland.

هولاندى *hulandi* **1** /adj */ Dutch. ‖*samn*^{i} *hulandi* cooking fat made from a mixture of animal and vegetable fats. **2** /n */ a Dutchman. **3** /n, no pl/ the Dutch language.

ه ل ه ل

هلهل *halhil* /vt/ **1** to make tattered, wear out. *leeh*

halhilt il-ɋamiiṣ kida why have you made your shirt so ragged? **2** to abuse severely. *misikt-u halhilt-u* I gave him a piece of my mind. - vn *halhala*; ava/pva *mihalhil*.

هلهولة *halhuula* /n pl *halahiil*/ tattered garment.

هلهيلة *hulheela = halhuula*.

هليهلى *hilihli* /adj invar/ slapdash. *fuṛl' hlihli* slapdash work. - /adverbially/ *ɛaayiʃ hilihli* he lives chaotically.

اتهلهل *ʔithalhil* /vi/ **1** to become or be made tattered. *huduum-u thalhilit* his garments wore out. **2** to be abused, be given a dressing-down. - ava/iva *mithalhil*.

ه ل و س

هلوس *halwis* /vi/ to suffer from delirium or hallucinations. *w-ana ɋaayim min il-bing' kunt' b-ahalwis* as I was coming out of the anaesthetic I was hallucinating. - vn *halwasa*; ava *mihalwis*.

هلوسة *halwasa* /n/ hallucination, delirium. *ḫubuub il-halwasa* hallucinatory drugs.

ه ل ى ك –

هيلوكوبتر *hilyukubtar* (also *ṭayyaara hilyukubtar*) <Engl> /n pl *-aat*/ helicopter.

ه م ب ك

همبك *hambak* <poss Engl *humbug*> /vi/ to make a fulsome and false show (of servility, in boasting etc.). *hambaka ɛaleena w-baɛdeen faʃuuʃ* we get endless humbug - and then nothing. - vn *hambaka;* ava *mihambak*.

همباك *himbaak* /n pl *hambakiyya*/ hypocritical flatterer or braggart.

ه م ج

همجى *hamagi* /adj pl *hamag*/ uncouth, barbaric. *ʔin-naas illi fooɋ hamag* the people upstairs are savages.

همجيّة *hamagiyya* /n/ disorderliness. *laazim tisiib-ak min ḫaalit il-hamagiyya lli nta ɛaayiʃ biiha* you must put an end to this disorderly way of life you are leading.

ه م د

همد *himid (a)* /vi/ to become exhausted, become spent. *ʔana hmidt' min kutr if-fuṛl* I felt worn out from so much work. *ʔin-naar himdit* the fire died down. ‖*ʔihmad* be quiet! shut up! -vn *humuud, hamadaan*; ava *hamdaan*.

همد *hamad (i)* /vt/ to hurl down. *misik if-fanṭa w-hamad-ha ɛal-ʔarḍ* he seized the bag and hurled it to the ground. -vn *hamadaan*; ava *haamid*; pva *mahmuud*.

اتهمد *ʔithamad* /vi/ **1** to be hurled down. **2** to become exhausted or spent. - ava/iva *mithimid*.

انهمد *ʔinhamad = ʔithamad*. - ava/iva *minhimid*.

همّد *hammid* /vt/ to exhaust, debilitate. *gism-i mhammid* my body is exhausted. - vn *tahmiid*; ava/pva *mihammid*.

اتهمّد *ʔithammid* /vi/ to become exhausted, become debilitated. - ava *mithammid*.

ه م ر

همر *hamr* /adj invar/ *[non-Cairene]* made of a certain fine heat-resistant type of clay (of cooking-vessels etc.).

ه م ز

همز *hamaz↑ (i)* /vt/ **1** to spur (a horse). **2** to write the *hamza* over (a letter). **3** to enunciate (a word) with a glottal stop instead of a vowel. - vn *hamz*; ava *haamiz*; pva *mahmuuz*.

همز *hamz* /n/ backbitting, malicious gossiping. *nizil hamz' (w-lamz') f-sumɛit-ha* he attacked her reputation with a vengeance.

همزة *hamza* /n pl *-aat*/ **1** instance noun of *hamz*. **2** glottal stop. **3** written sign for a glottal stop. ‖*kaanit hamzit il-waṣl' ḅenathum* she was the connecting link between them.

مهموز *mahmuuz* /n pl *mahamiiz*/ spur.

مهماز *muhmaaz, mihmaaz = mahmuuz*. see further under م ه م ز

اتهمز *ʔithamaz* /vi/ passive of *hamaz*. - iva *mithimiz*.

انهمز *ʔinhamaz = ʔithamaz*. - iva *minhimiz*.

ه م س

همس *hamas (i)* /vi/ to whisper. *hamas fi-widn-i* he whispered in my ear. - vn *hams*; ava *haamis*; pva *mahmuus*.

همسة *hamsa* /inst n, pl *-aat*/ **1** a whisper. **2** a brief moment. *ʔistannaa-ni miʃ ḫ-aṿiib hamsa* wait for me, I won't be a moment.

اتهمس *ʔithamas* /vi/ (impersonal) passive of *hamas*. *yaama raṿy' ktiir bi-yithimis fi-wdaan-i ɛala n-naas* how much gossip about other people has been whispered in my ears! - iva *mithimis*.

انهمس *ʔinhamas = ʔithamas*.

اتهمّس *ʔithammis* /vi/ to whisper together. *ʔintu bi-thammisu ɛala ʔeeh* what are you all whispering about? - ava *mithammis*.

اتهامس *ʔithaamis = ʔithammis*. - ava *mithaamis*.

ه م ش ¹

هامش *haamiʃ* /n pl *hawaamiʃ*/ margin. ‖*xalli l-maʃruuɛ*

da ɛal-haamiʃ dilwaqti w-baɣdeen nibḥas-u let's leave this project aside for the time being; we'll discuss it later. - *siib-ak minnu da raagil ɛal-haamiʃ* never mind him, he's nobody!

هامشى *haamiʃi*↑ /adj/ marginal. *ʕadwaar haamiʃiyya* bit parts.

همّش *hammiʃ* /vt/ to make notes in the margin(s) of (a book or the like). *hammiʃt ik-kitaab kull-u* I wrote notes in the margins through the whole book. - **vn** *tahmiiʃ*; ava/pva *mihammiʃ*.

اتهمّش *ʕithammiʃ* /vi/ passive of *ḥammiʃ*. - **iva** *mithammiʃ*.

[2] ه م ش

هشّ *hamaʃ (i, u)* /vt/ *[slang]* to gobble up, eat in a hurry. *hamaʃ il-ɣadwa f-sawaant w-ɋaal ma-fii-ʃ ḫaaga taani* he wolfed down the food and asked for more! ‖ *hamaʃuu-ni ɛalɋa suxna* they gave me a good hiding. - vn *hamʃ, hamaʃaan*; ava *haamiʃ*; pva *mahmuuʃ*.

اتهمش *ʕithamaʃ* /vi/ *[slang]* to be bitten, to be eaten up with quick bites. - iva *mithimiʃ*.

انهمش *ʕinhamaʃ* = *ʕithamaʃ*.

[3] ه م ش see ه م و ش: *hamuuʃ*

ه م ش ر

همشرى *hamʃari* /adj pl *-yya*/ **1** huge, colossal. *raagil hamʃari* a gigantic man. **2** generous and expansive.

ه م ط

همط *hamaṭ (u)* /vt/ to guzzle down (soft or semi-liquid food). *nizil fil-manga hamṭ* he guzzled down the mangoes. - vn *hamṭ*; ava *haamiṭ*; pva *mahmuuṭ*.

اتهمط *ʕithamaṭ* /vi/ to be guzzled down. - iva *mithimiṭ*.

همّط *hammaṭ* /vt/ to soften. *ʕil-ʕawwil tittakka ɛal-bitingaana wi-thammaṭ-ha* first you press the eggplant and soften it. - vn *tahmiiṭ*; ava/pva *mihammaṭ*.

اتهمّط *ʕithammaṭ* /vi/ to become or be made soft. *ʕil-martaba thammaṭit* the mattress became floppy. - ava/iva *mithammaṭ*.

ه م ك

همك *hamak (u)* /vt/ to mash, purée (vegetables etc.). - vn *hamk*; ava *haamik*; pva *mahmuuk*.

مهموك *mahmuuk* /adj */ absorbed, deeply involved. *mahmuuk ɛal-faaḍi* busy doing nothing.

اتهمك *ʕithamak* /vi/ to be mashed, be puréed (of vegetables, etc.). - iva *mithimik*.

انهمك *ʕinhamak* /vi/ **1**↑ to become engrossed. *minhimik fi-ʃuɣl-u* absorbed in his work. **2** to be mashed, be puréed. - vn *ʕinhimaak*; ava *munhamik*; ava/iva *minhimik*.

ه م ل

همل *hamal (i)* = *ʕahmal*. - vn ***haml, hamalaan***; ava *haamil*; pva *mahmuul*.

اتهمل *ʕithamal* /vi/ to be neglected. *ḫaalit il-mariiḍ saaʕit li-ʕinnu thamal mudda ṯwiila* the patient got worse because he was neglected for a long time. - iva *mithimil*.

انهمل *ʕinhamal* = *ʕithamal*. - iva *minhimil*.

همّل *hammil* **1** /vt/ to neglect. *kaanit magbuura ɛala ʕinnaha thammil goz-ha ɛaʃaan xaaṭir ʃuɣl-a-ha* she was forced to neglect her husband because of her work. **2** /vi/ to be negligent and careless. *ḫizint*[i] *lamma ʃuft-a-ha mhammila f-nafs-a-ha baɣd*[i] *ṭalaq-ha* I felt sad to see her neglecting herself after her divorce. - vn *tahmiil*; ava/pva *mihammil*.

اتهمّل *ʕithammil* /vi/ to be neglected. *ʕayy*[i] *garḥ*[i] *ʕiza thammil ɛurḍa lit-tasammum* any wound, if neglected, is liable to become infected. - iva *mithammil*.

أهمل *ʔahmal* /vt/ to neglect, *ʔahmalit wagib-ha* she neglected her duty. *huwwa muhmil wi-bi-yṭaṣlaq ʃuɣl-u* he's negligent and careless in his work. - vn *ʔiḥmaal*; ava *muhmil*; pva *muhmal*.

مهملات *muhmalaat*↑ /pl n/ waste. *sallit muhmalaat* wastepaper basket.

[1] ه م م

همّ *hamm*[i] *(i)* **1** /vt/ to be of interest to, concern. *ma-thimm*[i]*-nii-ʃ il-filuus* money doesn't interest me. *ʕilli yhimm-i-ni dilwaqti l-mustaqbal* what concerns me now is the future. *wala yhimm-ak* don't bother about it, don't let it worry you! *ʕilli ma-yhimm-ak waṣṣi ɛalee gooz ʕumm-ak [prov]* you may entrust to the care of your stepfather (only) things you don't care too much about. **2** /vi/ to step up the pace. *himmu f-ʃuɣl-u-ku* move the work! - vn *himma, hamamaan*; ava *haamm, haamim*; pva *mahmuum*.

¶ *hamm*[i] *bi-*↑ to be about to (do s.th.). *hammu bir-raḥiil* they were about to set off.

همّة *himma* /n/ **1** zeal, spirit. *warrii-ni himmit-ik fil-beet* show me how well you can do in the house. ‖ *ʕabu himma* epithet for an energetic man. - *ʕiɛmil-lak himma* get a move on! hurry up! put some guts into it! **2** /pl *himam*/ strenuous effort (to be helpful to others). *naas ʕaṣḥaab himam* helpful people.

مهموم *mahmuum* /adj */ worried.

همّ *hamm*[2] /n pl *humuum*/ worry, concern, anxiety. *hamm*[i] *w-ɣamm* worry and gloom, toil and trouble.

hamm-ak ɛala baṭn-ak all you care about is your belly. ‖*gaa-k hamm* may worry beset you! - *ʕatɋal mil-hamm*[a] *ɛal-ɋalb* intolerable. - *ʕaktar min* (or *zayy*) *il-hamm*[a] *ɛal-ɋalb* very numerous. - *riḍiina bil-hamm*[i] *wil-hamm*[i] *miʃ raaḍi (biina) [prov]* we put ourselves out but despite that we cannot please (said, e.g., when one offers to marry an ugly girl, and is refused).

أهمّ *ʕahamm* /el/ more/most important.

أهمّيّة *ʕahammiyya* /n/ importance, significance.

همام *humaam* /adj */ generous in performing services for others, helpful.

مهامّ *mahaamm* /pl n/ (official) duties, tasks.

مهمّ *muhimm* **1** /adj */ important. *masʕala muhimma* an important matter. ‖ *ʕil-muhimm* the point is ..., to get to the point .... - *xallii-na fil-muhimm* let us concentrate on what matters.

مهمّة *muhimma* /n pl *-aat*/ task, job. *ʕiṣ-ṣarraaf muhimmit-u ʕinnu ywazzaɛ il-murattabaat* the cashier's job is to hand out the salaries.

مهمّات *muhimmaat* /pl n/ equipment, supplies.

اهتمّ *ʕihtamm* /vi/ to take an interest, be concerned. *ʕil-mudiir faxṣiyyan bi-yihtamm*[i] *biina* the director himself takes an interest in us. *laazim tihtamm*[i] *b-sinaan-ak* you must take care of your teeth. -vn *ʕihtimaam*; ava *mihtamm, muhtamm.*

ه م م[2]

همّ *hamm* <Copt> *[children]* **1** /n/ food. **2** /interj/ eat! - also *ʕamm, mam.*

ه م م ا see ه و و ا: *humma*

ه م ه م

همهم *hamham, hamhim* /vi/ to mutter, mumble. -vn *hamhama*; ava *mihamham, mihamhim.*

ه م و ش

هاموش *hamuuʃ* /coll n/ gnat(s), midge(s).

هاموشة *hamuuʃa* /unit n, pl *-aat*/ a gnat, a midge.

هاموشاية *hamuʃaaya = hamuuʃa.*

ه م ى و ن

همايونى *hamayooni* <P *humâyûn*> **1** /adv/ haphazardly, arbitrarily. *ma-b-tiḥaṭṭ*[i]*-ʃ kida hamayooni* it is not put in just any old way. **2** /n/ ornate style of calligraphy.

ه ن ء see ه ن ى

ه ن ا

هنا *hina* /adv/ here. *taɛaala hina* come here! *baɋa fii min hina maʃaakil kitiir* from that point there were lots of problems. *min hina w-raayiḥ* from now on. ‖*fiḍilt*[i] *waraa min hina l-hina* (1) I followed him around everywhere. (2) I kept on trying to persuade him in every possible way. - *wi-min hina l-hina* after a lot of effort, after a lot of discussion, as in *ɋaɛadt*[i] *ʕafaaṣil wi-min hina l-hina xaṣam ɛafara saav* I kept on bargaining and after a lot of talk he came down ten piastres. - *hina walla hina* somewhere, as in *ḥa-tlaaɋi fuxl*[i] *hina walla hina* you'll find work somewhere. - *wala huwwa hina* he doesn't give a damn, he couldn't care less. - *la hina wala hnaak* of no importance, neither here nor there. - *yaama hina (w-)yaama hinaak* see *yaama.*

¶ *min hina wi-... (min hina)* /correl conj/ as soon as, the moment that, as in *wiṣilna min hina w-ṭabb*[i] *min hina* no sooner had we arrived than he dropped in, *raaḥ iʃ-ʃuxl*[i] *min hina w-nizilt*[a] *ɛas-suuɋ min hina* the moment he went to work, I went shopping.

هنا *huna* /adv/: *naḥnu huna* (phrase used by youths in trying to attract the attention of girls on the street). *naḥnu huna ya sitt* phrase used by a husband to his wife, implying that she ignores his authority.

ه ن ا ك

هناك *hinaak* **1** /adv/ there. *ruuḥ hinaak* go there! *yaama hina (w-)yaama hnaak* see *yaama. la hina wala hnaak* see *hina.* **2**↑ /part/ there is, there are. *ʕiza kaan hinaak ḥaaga tzaɛɛal-ak* ... if there's anything that annoys you .... *hinaak ṭariɋteen fis-sibaaɣa* there are two methods of dyeing.

ه ن د[1]

الهند *ʕil-hind* /fem prop n/ India. ‖*laffeet is-sind*[i] *wil-hind* I went everywhere. - *gooz hind* coconut(s). *goozit* or *gozaayit hind* a coconut.

هندى *hindi* /pl *hunuud, hanadwa*/ **1** /adj/ Indian. ‖*manga hindi* smallish green variety of mango. - *miʃmiʃ hindi* large variety of apricot. - *farxa hindi* Indian chicken, a strain of domestic fowl larger than the *farxa baladi* and distinguished by its dark red plumage and long legs and neck. - *ḥaṭab hindi* dry stalks of cotton used for kindling etc. - *mazaag hindi* hashish. - *yasmiin hindi* pagoda tree, frangipani. - *xaʒab hindi* greenheart. - *faɛiira hindi* variety of barley the seeds of which are used as a laxative. **2** /n/ **2a** an Indian. *hunuud ḥumr* Red Indians. **2b** dupe, fool, fall guy. *ʕinta fakir-ni hindi* do you take me for a fool?

هنادى *hanaadi: ʕil-hanaadi l-milaaḥ* or *ʕil-katakiit il-hanaadi* cries of the vendor of chicks.

ه ن د ²
هند *hand* (also *handibool*) <Engl *hand*> /n/ *[soccer]* touch foul.

ه ن د ب
هندباء *hindiba* /n/ endive.

ه ن د ز ¹
هندازة *hindaaza* (also *hindaasa*) /n pl *-aat*/ unit of linear measurement equal to 0.656 metres. see further under ه ن د س

ه ن د ز ²
هندز *handiz* **1** /vt/ to spruce up, make elegant. **2** /vi/ to behave with sensitivity or consideration. *handiz fiwayya* have a heart! - vn *handaza*; ava *mihandiz*.
¶ *handiz ɣala* to check on (s.o. or s.th.). *miʃ ɣayziin ħadd^i yhandiz ɣaleena* we don't want anyone checking up on us.
اتهندز *ʔithandiz* /vi/ (impersonal) passive of *handiz*. *ʔana ma-yithandiz-ʃ^i ɣalayya* I am not one whose work is to be checked up on! - iva *mithandiz*.

ه ن د س see also ه ن د ز ¹
هندسة *handasa* /n/ engineering. ‖*ʔil-handasa l-miɣmariyya* architecture.
هندسي *handasiˆ* /adj */ **1** pertaining to engineering. ‖*rasm^i handasi* technical drawing. **2** geometric.
مهندس *muhandis* (also *muhandiz, mihandiz*↓) /n */ engineer. ‖*muhandis ʂoot* sound engineer. - *muhandis miɣmaari* architect. - *ʃuɤl^i muhandisiin* carefully planned work.
المهندسخانة *ʔil-muhandisxaana* /n/ *[obsol]* the former School of Engineering.

ه ن د م
هندم *handim* /vt/ to dress (s.o.) elegantly. - vn *handama*; ava/pva *mihandim*.
هندام *hindaam* /n/ attire. *kull-u zooq wi-ħusn^i hindaam* he's thoroughly polite and well-groomed.
اتهندم *ʔithandim* /vi/ to dress or be dressed elegantly. - vn *tihandiim*; ava/iva *mithandim*.

ه ن ض و م
هنضومة *hanḍuuma* /n pl *hanaḍiim*/ large chunk (of meat). - also *haḍuuma*.

ه ن ك
هنك *hank: hank^i w-rank* onomatopoeia for a medley of noise. *ʔil-beet malyaan hank^i w-rank* the house is full of brouhaha. ‖*fuɤl il-hank^i wir-rank* ≈ a bit of slap and tickle (ranging from flirtatious remarks and gestures to the sexual act).

ه ن ك ر
هنكر *hankar* /vi/ to potter about, mess about, be busy doing nothing. *taɣaala niskar w-nhankar* come on, let's get drunk and mess about a bit! - vn *hankara*; ava *mihankar*.
هنكار *hinkaar* /adj/ one who busies himself doing nothing.

ه ن م see ه أ ن م : *haanim, hawanmi*

ه ن ن
هنن *hannin* /vt/ to rock and sing (a baby) to sleep. - also *hanhin*. - vn *tahniin*; ava *mihannin*.
اتهنّن *ʔithannin* /vi/ to be rocked and sung to sleep (of a child). - also *ʔithanhin*. - iva *mithannin*.

ه ن ه ن
هنهن *hanhin* /vt/ to rock and sing (a baby) to sleep. - also *hannin*. - vn *hanhana*; ava/pva *mihanhin*.
اتهنهن *ʔithanhin* /vi/ to be rocked and sung to sleep (of child). - also *ʔithannin*. - vn *tihanhiin*; ava/pva *mithanhin*.

ه ن ى
هنى *hini (a)* /vi/ to give pleasure or gratification. *ʔil-ɤurba ma-hinyit-ʃ^i lu* being away from home brought him no joy or satisfaction. *kull illi tiɣmil-u yihnaa-li* everything you do gives me pleasure. - vn *hana*; ava *haani*.
هنا، هناء *hana* /n/ well-being, good health, happiness. ‖*baɣd il-hana b-sana [prov]* after the appropriate time. - *bil-hana wif-fifa* ≈ I'm glad you have enjoyed (or: are enjoying) it! (response to compliment on food). - *ɣariis il-hana* the right man, Mr. Right, Prince Charming. ... *il-hana* may ... bring you wellbeing, as in *noom il-hana* have a good sleep! *miʃwaar il-hana* have a pleasant outing! *xabiiz il-hana* (may the bread you bake bring good health) ≈ happy baking! - *ya hanaa(-k) law* ... how happy (you) would be if ..., as in *ya hanaa-ya law zurt-i-ni* how happy I would be if you were to visit me!
هنى، هنيء *hani* /adj/ enjoyable, pleasant. *ʔayyaam haniyya* happy days. *ʔil-luqma l-haniyya tkaffi miyya [prov]* (even) a piece of bread eaten in a friendly atmosphere suffices for a hundred.

¶ *haniyyan* ≈ good health! (said, e.g., to a guest who has just finished eating or drinking). - *haniyyaa-(lak)* how good it is for (you)! *ʕin taab haniyyaa-lu* how fortunate he would be if he repented! *haniyyaa-lak ya faaɛil il-xeer (wis-sawaab ɛand allaah) [beggars]* how blessed are you who give charity (for God will reward you).

هنّى، هنّأ *hanna* **1** /vt/ **1a** to make happy. *gooz-i mhannii-ni* my husband does all I could desire to make me happy. *ʕil-faraḥ-ga w-hannaa-ni* joy has come and gladdened me. *la mhanni wala mʃanni* giving no joy whatsoever. ‖ *ma-hannaa-(nii)-ʃ ɛala* ... (he) prevented (me) from enjoying ..., as in *ʕil-ɛiyaal ma-hannu-naa-ʃ ɛan-noom ʕimbaariḥ* the kids didn't let us have a good sleep last night, *faat ɛaleena saaɛit il-ɣada w-ma-hannaa-naa-ʃ ɛalee* he stopped in at lunch time and (so) didn't let us enjoy it. **1b** to grant good health to (of God). *ʕallaah yihannii-k* response to *bil-hana* (q.v.) and *haniyyan* (q.v.). **2** to congratulate. - vn *tahniyya*; ava/pva *mihanni*.

تهانى، تهانٍ *tahaani* /pl n/ congratulations, felicitations. *tilliɣraaf tahaani* a congratulatory telegram. *ɋaddimnaa-lu t-tahaani* we offered him congratulations.

اتهنّى *ʕithanna* /vi/ to be made or become happy. *ʕithanni* rejoice! *tiɛiif wi-tithanna* may you live long and be happy! *ʕilli waaxid ɛaɋl-ak yithannaa-bu [joc]* may he who has stolen your mind be made happy by it! (to one who is daydreaming, apparently of his beloved). - ava/iva *mithanni*.

استهنى *ʕistahanna↓* = *ʕithanna*. - ava/iva *mistihanni*.

ه ه

هاء *hih* /fem n, pl *-aat*/ twenty-sixth letter of the Arabic alphabet. - also *haa, haaʕ, heeh*.

ه و see ا ه و : *huwwa*

ه و ب

هوّب *hawwib* /vi/ to approach, go near. *ʕiyyaa-k tihawwib naḥyit il-baab* don't you dare go near the door! *ma-txallii-ʃ il-ɛayyil yihawwib naḥyit il-furn* don't let the child go near the stove! *hawwib bi-ɛaṣaayit il-ɛizz[i] wala tiɋrab biiha [prov]* ≈ it's better to command respect for one's power than actually to use it. - vn *tahwiib*; ava *mihawwib*.

ه و ج see also ه ى ج

هوجة *hooga* /n pl *-aat*/ **1** confusion, commotion. *ʕig-gamɛiyya n-nahar-da hooga* the co-operative is bedlam today. **2** uprising, insurrection. *hoogit ɛuraabi* the Urabi uprising.

أهوج *ʕahwag* /adj, fem *hooga*, pl *huug*/ rash, reckless.

ه و ج ل

هوجل *hoogal* <Copt> /n pl *hawaagil*/ flail (for threshing).

ه و د [1]

هاود *haawid* /vt/ to go along with, be reasonable with. *hawid-ni fis-siɋr* he was reasonable with me over the price. *ma-yhawid-nii-ʃ fi-ḥaaga* he won't go along with me in anything. - vn *mihawda, hawaada*; ava *mihaawid*.

هوادة *hawaada* /n/ gentleness. *tismaḥ tikkallim bi-hawaada mɛaaha li-ʕinnaha ḥassaasa ɋawi* will you talk gently to her, for she's very sensitive.

اتهاود *ʕithaawid* /vi/ **1** to be reasonable. *raagil ṭayyib wi-mithaawid maɛa n-naas fi-kull[a] ḥaaga* a good type who goes along with people in everything. *bi-yithaawid fis-siɋr* he's flexible over the price. **2** to be gone along with. *ʕil-ɛiyaal ma-tithawid-ʃ[i] f-ʕayy[i] ḥaaga tuṭlub-ha* children are not to be given in to every time they ask for something. ‖ *raagil ma-yithawid-ʃ[i] ɛala ɛaɋl-u* a naive man. - ava/iva *mithaawid*.

متهاود *mithaawid, mutahaawid↑* /adj/ low, moderate (of price). *bi-ybiiɛu b-siɋr[i] mithaawid ɛan siɋr is-suuɋ* they sell at a price lower than that of the market.

ه و د [2] see also ى ه و د

هوّد *hawwid* /vt/ **1** to convert (s.o.) to Judaism. **2** to Judaize. - vn *tahwiid*; ava/pva *mihawwid*.

اتهوّد *ʕithawwid* /vi/ **1** to convert or be converted to Judaism. **2** to be Judaized. - ava/iva *mithawwid*.

ه و د ج

هودج *hoodag* /n/ camel litter.

ه و ر [1]

اتهوّر *ʕithawwar* /vi/ to behave recklessly. *bi-yithawwar fis-siwaaɋa* he drives recklessly. - vn *tahawwur*; ava *mithawwar, mutahawwir*.

متهوّر *mutahawwir↑* /adj */ rash, reckless, irresponsible.

ه و ر [2]

انهار *ʕinhaar* /vi/ to fall apart, collapse. *ʕil-ɛimaara nhaarit* the building collapsed. *lamma ʃuft il-ḥadsa ʕinhart* when I saw the accident I went to pieces. - vn *ʕinhiyaar*; ava *minhaar*.

انهيار ʔinhiyaar /n pl -aat/ breakdown. *ʔinhiyaar ɛaṣabi* nervous breakdown.

ه و ر [3]

هوّارة *hawwaara* /prop n/ Hawwara, a bedouin tribe in Upper Egypt. *iẓ-ẓarṭ[i] lil-hawwaara wiḍ-ḍarb[i] lil-fallaḥiin [prov]* the Hawwara fart and the peasants get punished for it.

ه و س [1]

هوس *hawas (i)* /vt/ to drive (s.o.) to the point of madness. *ḥabbet-ha ɑawi bi-fakl[i] yihwis* I loved her to distraction. *ɑal-li nukta hawasit-ni mid-diḥk* he told me a joke which almost killed me with laughter. - vn *hawsa, hawasaan*; ava *haawis*; pva *mahwuus*.

هوسة *hawsa* /n/ bedlam. *baṭṭalu l-hawsa di* stop that noise! ‖ *bint[i] hawsa* a maddeningly beautiful girl. - *ḥiyya ɛamlaa-li hawsa f-muxx-i* she's driving me wild (e.g., with passion). - *wil-hawsa di kull-a-ha* and all that jazz, as in *ɑaɛadna nitkallim fil-ʔadab wil-fann[i] wil-hawsa di kull-a-ha* we sat talking of literature and art and all that jazz.

مهووس *mahwuus* /adj * and pl *mahawiis*/ foolish, crazy. *ma-taxud-f[i] ɛala kalaam-u da raagil mahwuus* don't take what he says seriously; he's completely dotty.

أهوس ʔahwas /el/ more/most crazy. ‖ *ṣaḥiiḥ hiyya bint[i] hawsa laakin ʔuxt-a-ha ʔahwas minha* it's true that she's maddeningly pretty, but her sister is (even) more beautiful!

اتهوس *ʔithawas* /vi/ 1 to go mad, become insane. 2 to be driven mad. - ava/iva *mithiwis*.

انهوس *ʔinhawas* = *ʔithawas*. - iva *minhiwis*.

ه و س ( ) [2]

هوس *hoos* <Copt> /n pl -aat/ *[Chr]* hymn. ‖ *ʔil-ʔarbaɛ hosaat* four hymns taken from the Old Testament.

هويس *hawiis* /n pl *hiwísa, ʔahwisa, hawisaat*/ (river or canal) lock.

ه و ش

هوّاش *hawwaaʃ* /n */ one who puts on a show in order to deceive.

هوّش *hawwiʃ* /vt/ 1 to put on a show in order to deceive. *ʔil-mudiir hawwiʃ-ni wi-ɛtaraft* the director bluffed me (with threats he did not intend to carry out) into confessing. 2 to make unstable, make confused. *ɑamal-ha hawwiʃ ɛaɑl-i* her beauty drove me crazy. *ʔafkaar mihawwiʃa* woolly ideas. - vn *tahwiiʃ*; ava *mihawwiʃ*.

تهويشة *tahwiiʃa* /inst n, pl -aat, *tahawiiʃ*/ a bluff.

مهوّشاتي *mihawwiʃaati* /n pl -yya/ one who puts on a show in order to deceive.

اتهوّش *ʔithawwiʃ* /vi/ passive of *hawwiʃ*. - iva *mithawwiʃ*.

ه و ك ى

هوكى *hooki* <Engl> /n/ hockey.

ه و ل

هول *hool* /n pl *hawaayil, ʔahwaal*/ overwhelming terror. *min hool il-muṣiiba ʔuɤma ɛaleehum* they were so overwhelmed by the disaster that they fainted. *ʃufna l-hawaayil* we saw awful things. ‖ *ʔabu l-hool* the Sphinx. *lamma ʔabu l-hool yinṭaq [prov]* when the Sphinx speaks (i.e. never).

أهيل *ʔahyal* /el/ more/most wonderful or marvellous.

هايل، هائل *haayil* /adj */ wonderful, marvellous. *fikra hayla* a fantastic idea. *manẓar haayil* a wonderful scene.

هوايل *hawaayil* /pl n/ awesome things. *ʃufna l-hawaayil* we've seen shocking things. ‖ *yisawwi l-hawaayil* (he) works wonders.

مهول *mahuul* /adj */ awesome, fantastic. *fikra mahuula* a marvellous idea. *ʔakl[i] mahuul* fantastic food. *ṭarabeeza mahuula* a colossal table.

هوّل *hawwil* /vt/ to exaggerate, blow up, make a big fuss about. *xilaaf basiiṭ wi-hawwil-u* (it was just) a minor disagreement and he made a big thing of it. - vn *tahwiil*; ava *mihawwil*.

اتهوّل *ʔithawwil* /vi/ to be exaggerated, be blown up, be made a big fuss over. - iva *mithawwil*.

استهول *ʔistahwil* /vt/ to consider overwhelming. *ʔinta mistahwil il-ḥikaaya ɛal-faaḍi* there is no reason for you to consider the matter so enormously difficult. - vn *ʔistihwaal*; ava *mistahwil*.

ه و ن [1]

هان *haan[i] (u)* /vi/ 1 to become of little value, become insignificant. *ʔid-dinya haanit ɛalayya* everything seemed pointless to me. *ʔahuun ɛaleek* am I nothing to you (that you should treat me like this)? *ma-thun-f[i] ɛalayya ʔasib-ha* she means too much to me for me to leave her. *kull-u yhuun fi-xidmit ig-gumhuur* all difficulties are as nothing in the service of the public. *miʃ haayin ɛalee ʔinn...* it is no easy matter for him to .... *ʔil-ɛiʃra ma-thun-ʃ [prov]* intimacy should not be lightly betrayed. 2 to near the end, draw towards a close (espe-

cially of s.th. arduous). *xalaaṣ il-miʃwaar haan* be patient, the journey is nearly over. *haanit xalaaṣ* it's almost over. - ava *haayin*.

هان *haan*[2] *(i)* /vt/ to insult, humiliate, debase. *min haan-ak hiin-u [prov]* insult him who insults you. *hiin ʿirʃ-ak wala thiin nafs-ak [prov]* it's better to hurt your wallet than yourself. - /the literary passive occurs/ *yoom l-imtiḥaan yukram il-marʔ*[i] *ʃaw yuhaan [prov]* on examination day one is either honoured or humiliated ≈ it is through trial that each man's worth is discovered. - ava *haayin*.

هيّن *hayyin* /adj/ **1** easy, simple. *ʃuʏl*[i] *hayyin* easy work. **2** trivial, slight, insignificant. *maʃaakil hayyina* trivial problems.

أهون *ʔahwan* /el/ **1** more/most easy or simple. **2** more/most trivial or insignificant. *tiigi ʿala ʔahwan sabab* ≈ great things (may sometimes) take place for insignificant reasons.

هوان *hawaan* /n/ degradation. *ma-yiqbal-ʃ il-hawaan ʏeer il-ʿabiid [prov]* none but slaves will accept degradation.

هويّن *huwayyin, hiwayyin* /adj */ **1** easy, simple. **2** insignificant, trivial.

مهانة *mahaana* /n/ degradation.

اتهان *ʔithaan* /vi/ to be humiliated, be brought low. *ʔawlaad-i gaaʿu wi-thaanu* my children were reduced to hunger and humiliation. - iva *mithaan*.

انهان *ʔinhaan* = *ʔithaan*. - iva *minhaan*.

هوّن *hawwin* /vt/ to ease, make bearable. *ʔallaah yihawwin il-muṣiiba ʿaleek* may God make the misfortune easy for you! - vn *tahwiin*; ava *mihawwin*.

مهوّن *mihawwin* /n/ Easer (epithet of God). *ya mhawwin (hawwin)* (O God, grant relief!) ≈ whenever shall (I) see the end of all this! (said in suffering or frustration).

أهان *ʔahaan* = *haan*[2]. - vn *ʔihaana*; ava *muhiin*.

إهانة *ʔihaana, ʔahaana* /n pl *-aat*/ **1** insult. ‖ *wiff*[i] *ʔihaana* one worthy of rebuke. **2** hard and menial work.

اتهاون *ʔithaawin* /vi/ to be lax, be heedless. *ʔil-ʿaskari thaawin maʿaana* the policeman let us off. - ava *mithaawin*.

استهون *ʔistahwin* /vt/ **1** to consider easy. **2** to select for ease or easiness. - vn *ʔistihwaan*; ava *mistahwin*.

¶ *ʔistahwin bi-* to consider insignificant, underestimate. *bi-tistahwin bii* you don't realise its true worth.

استهان *ʔistahaan*: *ʔistahaan bi-* to consider insignificant, underestimate. - (the literary passive occurs) *da raagil ma-yustahan-ʃ*[i] *bii* this man is not to be taken lightly, this is a man to be reckoned with. - vn *ʔistihaana*; ava *mistihiin, mustahiin*↑.

ه و ن[2]

هاون *hoon* /n pl *hiwína, ʔihwaan*/ mortar. *ʔiid hoon* pestle.

هاون *hawin* (also *madfaʿ hawin*) /n pl *-aat*/ *[mil]* mortar.

ه و ه

هوه *huuh: ya huuh* **1** (also *ya salaam ya huuh* or *ya naas ya huuh*) intensifying exclamatory expression. *ya huuh ʿal-gamal-da* wow! how beautiful! *ya huuh ʿala dammak* how clumsy of you! *ya naas ya huuh miʃ kida* for Heaven's sake, stop it! **2** everyone! anyone! (a call, for help). *ʔilḥaquu-na ya huuh* help, anyone!

ه و ه و

هوهو *hawhaw* /vi/ to bark. ‖ *lamma thawhaw* (not even) if you (should) bark (i.e. never). - vn *hawhawa*; ava *mihawhaw*.

ه و و

هوّ *hiww* /n/ void. *wiqiʿ min iṭ-ṭayyaara lil-hiww* he fell out of the aeroplane into the void. *saakin fil-hiww* living in the back of beyond, living at the ends of the earth. - /adjectivally/ *ʔaggart*[i] *ʔooḍa hiww*[i] *mutt*[i] *fiiha mil-bard* I rented a big draughty room in which I (practically) froze to death.

هوّة *huwwa*[1], *hiwwa* /n pl *-aat*/ chasm, abyss.

ه و و ا

هوّا *huwwa*[2] /fem *hiyya*, pl *humma*/ **1** personal pronoun of the 3rd person. *huwwa (hiyya, humma) hina* he is (she is, they are) here. *ma-huwwaa-ʃ* or *ma-huu-ʃ (ma-hiyyaa-ʃ* or *ma-hii-ʃ, ma-hummaa-ʃ* or *ma-hum-ʃ*[i]*) hina* he is (she is, they are) not here. ‖ *miʃ huwwa* /w masc referent/, *miʃ hiyya* /w fem referent/ not as it ought to be, as in *ṭaʿm-u miʃ huwwa* it doesn't taste as it should, *ṭariiʿa miʃ hiyya* an improper way, an incorrect method. - *huwwa huwwa* /w masc referent/, *hiyya hiyya* /w fem referent/, *humma humma* /w pl referent/ (1) the self-same, as in *ʔik-kalaam bi-yixtilif laakin il-maʿna huwwa huwwa* the wording may vary, but the meaning is just the same, *ʔil-ʿarabiyya hiyya hiyya lli ga fiiha mbaariḥ* it's the very same car that he came in yesterday, *rigiʿt*[i] *baʿd*[i] *sana w-laʿeet il-giraan humma humma* I went back a year later and found the same neighbours (as I'd known before). (2) the exact replica, as in *ʔiftareet ʿamiiṣ huwwa huwwa lli ʿaleek* I bought a shirt exactly like the one you're wearing, *ʔil-mooḍa btaaʿit is-sanaa-di hiyya hiyya btaaʿit il-xamsinaat* the fashion this year is just the same as that of the fifties,

ʕiṭ-ṭalaba humma humma laakin gibna mudarrisiin ziyaada we have the same number and type of students but we have increased the number of teachers. **2** /emphatic pron of the 3rd person/ **2a** emphasizing a preceding noun. ɛali huwwa lli xad-u it was Ali who took it. ʕumm-i hiyya lli ɣayba it's my mother who's not here. ʕil-ɛummaal humma lli ʃtaku it's the workmen who complained. **2b** emphasizing a preceding suffix. *da beet-u huwwa miʃ beet ʕaxuu* it's his house, not his brother's. *ʃuft-a-ha hiyya miʃ is-sikritiira btaɛit-ha* I saw her personally, not just her secretary. *ʕil-ɛarabiyya btaaɛit-hum humma* it's their (own) car. **3a** introductory signal to a subject referent. *huwwa l-bilastik ɛandina noɛeen* we have two kinds of plastic. *hiyya ʕamiira raaḥit feen* where has Amira gone? *humma maɛaak il-ʕawlaad* are the children with you? **3b** introductory particle emphasizing a following demonstrative. *huwwa da s-suʕaal illi mafruuḍ yitsʔil* that is the question that should be asked. *hiyya di l-muʃkila* that is the problem. *humma dool illi gum ʕimbaariḥ* they are the people who came yesterday. — */huwwa* only/ **4** interrogative particle signalling surprise or mild disbelief. *huwwa ma-fii-ʃ ḥadᵊ guwwa* is there nobody inside? *huwwa s-sittaat biᵊtifham* do women really understand (anything)? *huwwa-nta liik ḥaqqᵊ tikkallim* do you (really) have the right to speak?

¹ ه و ى

هوِي *hawa¹ (a)* /vt/ to be devoted to, have a passion for. ʕana b-ahwaa-ha I'm crazy about her. ʕana b-ahwa gamɛ iṭ-ṭawaabiɛ I have a passion for collecting stamps. - vn *hawa, hiwaaya*; ava *haawi*.

هوى *hawa²* /n/ **1** love. ‖ *ʕahl il-hawa* lovers. - *banaat il-hawa* prostitutes. **2** temperament, inclination. *ɛala hawaa-* as ... likes, as in *ʕimʃi ɛala hawaa-k* do as you please! *ʃiib-u ɛala hawaa lamma yiigi ɛala ɋafaa [prov]* ≈ give a thief enough rope and he'll hang himself. *ʕiʃ-ʃuɣlaana gat ɛala hawaa-ya* the job was to my liking. ‖ *hawaa-hum ga ɛala baɛḍ* they hit it off together.

هواية *hiwaaya* /n pl *-aat*/ hobby, pursuit. *ʃeed iṣ-ṣaqrᵊ di hwaayit il-muluuk* falconry is the hobby of kings. *hiwayaat riyaḍiyya* athletic activities.

هاوى *haawi¹* /n pl *huwaah*/ enthusiast, amateur, hobbyist.

استهوى *ʕistahwa¹* /vt/ to catch the fancy of, appeal to. *ʕir-raqṣᵊ b-yistahwii-ni* dancing appeals to me. - ava *mistahwi*.

² ه و ى

هوا، هواء *hawa³* /n/ **1** air. *fil-hawa ṭ-ṭalq* in the open air. *bi-yʃimm il-hawa* he takes a breath of fresh air. ‖ *kalaam fil-hawa* empty talk. - *filuus-u raaḥit fil-hawa* his money was used up fruitlessly. - *ɛala l-hawa* (1) *[broadcast]* on the air. (2) precariously, as in *waaɋif ɛala l-hawa* precariously balanced. - *ɛaayiʃ ɛala l-hawa* living on thin air. **2** breeze, wind. *ʃil-hawa ʃdiid* the wind is strong. ‖ *ʃiḥna fil-hawa sawa* (1) we're inseparable friends. (2) we're in the same boat together. - *wiɋiɛtᵗ walla l-hawa ramaa-k [prov]* ≈ 'Welcome to my parlour', said the spider to the fly! **3** cold chill. *xad hawa f-miɛdit-u* he got a chill on the stomach. **4** *[auto]* choke. — /adv/ **5** quickly. *ḥ-aṭbux hawa* I'll cook quickly. *taɛaala hawa* come as fast as you can!

أهوى *ʕahwa* /el/ more/most airy.

هوائى *hawaaʕi* /adj/ **1** in the air, aerial. *kablaat hawaʕiyya* overhead cables. **2** whimsical, capricious. — /n pl *hawaʕiyyaat*/ **3** aerial.

هوّاية *hawwaaya* /n pl *-aat*/ air vent, ventilator.

هاوى *haawi²* /adj/ airy. *ʕooḍa hawya* airy room.

هوّى *hawwa* /vt/ **1** to air, air out, ventilate. *ḥaṭṭit il-farfᵊ fil-balakoona ɛafaan tihawwii* she put the bedclothes on the balcony to air them. *ʃiftaḥ if-fibbaak wi-hawwi l-ʕooḍa* open the window and air out the room. ‖ *hawwii-na* push off! **2** to let air out of, deflate. *ʕil-ɛagalaati bi-yhawwi l-ɛagala l-manfuuxa ɋawi* the bicycle man deflates the over-pumped tyre. **3** to loosen. *ʕana mhawwi ṣ-ṣawamiil* I'm loosening the nuts. *hawwa l-ḥizaam baɛd il-ʕakl* he loosened his belt after eating. ‖ *ʕil-muṣiiba hawwit masamiir muxx-u* the disaster sent him dotty, the disaster left him with a screw loose. - *hawwii-lu* ≈ let him brag, what harm does it do (said to stop interference with someone who is telling exaggerated tales). — /vi/ **4a** to become deflated. *ʃil-ɛagala hawwit* the tyre went flat. ‖ *ɛaɋlᵗ mihawwi* featherbrain, twit. - *geeb-i mhawwi* my pocket's cleaned out, I'm penniless. **4b** to fart. **5** to become loosened. *ṣamuula mhawwiyya* a loose nut. - vn *tahwiyya*; ava/pva *mihawwi*.

اتهوّى *ʕithawwa* /vi/ **1** to get an airing. *ḥ-aṭlaɛ ʕathawwa ʃwayya* I'm going out for a breath of air. ‖ *ʕithawwa* shove off! **2** passive of *hawwa*. - ava *mithawwi*.

استهوى *ʕistahwa²* /vi/ to catch a chill, catch cold. ‖ *ya lahw-i ya mistahwi [women in trad soc]* ≈ what a mess you've made of that, you good-for-nothing! (mildly insulting exclamation used in badinage). - ava *mistahwi*.

ه ى ء

هيئة *hayʕa* /n pl *-aat*/ **1** organized body, institution.

hayʕit il-maktab the office staff. *hayʕit il-bariid* the Post Office Organization. *hayʕaat ɛilmiyya* academic organizations. *hayʕit taḥriir* editorial board. **2** form, shape. *hayʕit-ha ʕeeh* what does it look like? *damm[i] naazil ɛala hayʕit sarsuub* blood coming out in a trickle. ‖ *kaff[i] ḥayʕa* inspection of presentability and bearing (e.g., at military academies).

هيّأ *hayyaʕ* /vt/ **1** to prepare (mentally and physically). *laazim il-waaḥid yihayyaʕ nafs-u lif-fuṛl* one must prepare oneself completely for work. **2** to put in good shape, give a good finish to. *ʕin-naqqaaf faṭṭab il-beet wi-hayyaʕ-u* the decorator put the finishing touches to the house and made a good job of it. ‖ *ʕiddenaa-lu ɛalqa hayyaʕit-u* we gave him a beating that really worked him over. - vn *tahyiiʕ*; ava/pva *mihayyaʕ*.

اتهيّأ *ʕithayyaʕ* /vi/ **1** to be prepared (mentally and physically). **2** to be put in good shape, be given a good going-over. **3** it seemed apparent, it appeared. *ʕithayyaʕ-li ʕinn[i] gittit-i kull[i] ḥitta rayḥa f-naḥya* I felt as though each piece of my body had gone a different way. *bi-yithayyaʕ-lu ʕinnu saakin li-waḥd-u fil-kura l-ʕarḍiyya* he imagines he's the only man on earth. *ʕinfasseet fi-naẓar-i yoom ma thayyaʕ-li ʕinn[i] hawaa-ya yiigi ɛala hawaa-ha* I was blind the day I thought I could hit it off with her. *ʕana mithayyaʕ-li fuft[a] ḥaḍrit-ak qabl[i] kida* it seems to me I've seen you before. ‖ *yithayyaʕ-li ʕaquum ʕahiff-u qalameen nuḍaaf* I feel like giving him a good beating. - vn *tahayyuʕ*; ava/iva *mithayyaʕ*.

تهيّؤات *tahayyuʕaat* /pl n/ delusions, fantasies. *ma-tsaddaquu-f - di kull-a-ha tahayyuʕaat* don't believe him; these are all delusions (of his).

استهيّأ *ʕistahayyaʕ* = *ʕithayyaʕ* 3. - ava *mistahayyaʕ*.

ه ى ب

هاب *haab (a, i)* /vt/ to feel respect and fear for. *b-ahaab ʕabuu-ya* I've a healthy respect for my father. - vn *hayabaan, heeba*; ava *haayib*.

هيبة *heeba* /n/ respect, veneration. *lu heeba f-ʃuṛl-u* he is respected at work. *raagil ɛalee heeba* a man whose appearance commands respect. *ʕil-malik min hebt-u b-yinʃitim fi-ṛebt-u [prov]* because of his imposing presence a king is abused (only) in his absence ≈ a criticism given in one's absence may be a sign of veneration.

مهابة *mahaaba* = *heeba*.

مهاب *muhaab* /adj */ treated with respect and obedience. *huwwa muhaab fi-beet-u* he is respected and obeyed in his household.

اتهيّب *ʕithayyib* /vt and vi/ to fear, feel afraid of. *kull-i-na thayyibna (min) manẓar-u lamma wiqif quddamna yiwɛiẓ fiina* we all felt awe-struck as he stood before us preaching. - vn *tahayyub*; iva *mithayyib*.

ه ى ج

هاج *haag (i)* /vi/ **1** to become wild and violent, go berserk. *lamma ygii-lu d-door yihiig* when the fit seizes him, he goes berserk. *ʕil-baḥr[i] haag* the sea became rough. **2** to become sexually aroused. - vn *hayagaan, hiyaag, hayaag*; ava *haayig*.

هيّج *hayyig* /vt/ to arouse, excite (emotionally or sexually). *hiyya b-tilbiʃ kida min baab it-tahyiig* she dresses like that to stimulate passions. - vn *tahyiig*; ava/pva *mihayyig*.

اتهيّج *ʕithayyig* /vi/ to be aroused, be excited (emotionally or sexually). - vn *tahayyug*; iva *mithayyig*.

ه ى د see ² ه د د

ه ى ر see ² ه و ر : *ʕinhiyaar*

ه ى ر غ –

هيروغليفي *hiiruɣliifi, hiruɣliifi* **1** /n/ hieroglyphics. ‖ *bi-yitkallim hiruɣliifi* he speaks double-Dutch. **2** /adj/ hieroglyphic. *ʕil-xaṭṭ il-hiruɣliifi* hieroglyphic calligraphy.

هيروغليفيّة *hiiruɣliifiyya, hiruɣlifiyya* /n/ hieroglyphics.

ه ى ش

هاش *haaʃ (i)* /vi/ to become fluffy. *niḍrab is-sukkar wis-samn[i] l-ḥadd[i] ma yibqa haayiʃ* we beat the sugar and butter until it becomes fluffy. - vn *hayaʃaan*; ava *haayiʃ*.

هيّش *hayyiʃ* **1** /vt/ to make fluffy. *ʕir-riiḥ hayyiʃ faɛr-a-ha* the wind fluffed out her hair. **2** /vi/ to grow wild (of trees, grass, hair etc.). *saab daqn-u tiṭwal li-ḥadd[i] ma hayyiʃit* he let his beard grow until it was really shaggy. - vn *tahyiiʃ*; ava/pva *mihayyiʃ*.

اتهيّش *ʕithayyiʃ* /vi/ to be made fluffy. - iva *mithayyiʃ*.

ه ى ص

هاص *haaṣ (i)* /vi/ to become uproarious. *ʕil-malɛab haaṣ* the playing field erupted in pandemonium. *wi-kaan il-faraḥ haayiṣ li-ḥadd iṣ-ṣubḥ* the wedding party continued uproariously till the morning. ‖ *ʕil-ḥikaaya haaṣit* the affair got out of hand. - vn *heeṣa, hayaṣaan*; ava *haayiṣ*.

¶ *haaṣ fi-* to let fly at (s.o.). *haaṣ fiyya ʃtiima* he let fly at me with insults.

هيصة *heeṣa* /n pl *-aat*/ row, commotion. ‖*wi-heeṣa* and all the rest of it, and so on, as in *bi-yaaxud badal tamsiil kibiir wi-ɛarabiyya w-heeṣa* he gets a big expense-allowance, and a car and the whole works.
مهياص *mihyaaṣ* /n/ rowdy and raucous person. see further under م ه ى ص
هيّص *hayyaṣ* /vi/ **1** to make a commotion. *lamma l-mudarris yiṭlaɛ mil-faṣl il-ɛiyaal bi-yhayyaṣu* when the teacher leaves the classroom, the kids raise Cain. **2** to enjoy oneself, indulge in boisterous fun. *ya reet kunt*^{i} *zayy*^{i} *baqiit ig-gidɛaan illi bi-yhayyaṣu w-yidḥaku* I wish you were like the rest of the lads who horse around and laugh. *ḥa-niskar wi-nhayyaṣ* we'll get drunk and paint the town red! - vn *tahyiiṣ*; ava *mihayyaṣ*.
مهيّصاتى *mihayyaṣaati* /adj pl *-yya*/ boisterous, rowdy (of people).

ه ى ف
هاف *haaf (i)* /vi/ **1** to be petty, be trivial. *huwwa haayif ma-yiɛraf-f*^{i} *yikkallim fi-ʕayy*^{i} *mawḍuuɛ* he's trivial, unable to talk about any subject. **2** to be unable to get one's share. *kull-u-hum ʃaṭṭabu ɛal-ʕakl*^{i} *w-ma-fii-f ʕilla ʕana ʕilli hift*^{i} *f-wisṭii-hum* they all wolfed down the food and I was the only one among them to miss out. - vn *hayaafa, hayafaan*; ava *haayif*.
هيافة *hayaafa* /n pl *-aat*/ triviality.
أهيف *ʕahyaf* **1** /el/ more/most trivial, feather-brained etc. **2** /n/ *[slang]* pound (money). *ʕil-ɛarabiyya ʕumm*^{a} *xamast alaaf ʕahyaf* the five-thousand quid car.
هيّف *hayyif* **1**/vt/ to cause (s.o.) to lose his share. *hayyift-i-ni mil-ɣada* you made me miss the dinner. **2** /vi/ to miss, fall short. *ʕil-bunduqiyya hayyifit* the rifle misfired. *bi-yhayyif fil-ʕakl* he's a poor eater. - vn *tahyiif*; ava/pva *mihayyif*.
استهيف *ʕistahyif* /vt/ **1** to regard as trivial. **2** to select for triviality. *ʕistahyifit ḥaga raagil wi-tgawwizit-u ɛafaan timaʃʃii ɛala kef-ha* she chose to marry a nobody so that she could keep him under her thumb. — /vi/ **3** to behave in a childish manner. - vn *ʕistihyaaf*; ava/pva *mistahyif*.

ه ى ك ل
هيكل *haykal* /n pl *hayaakil*/ **1** internal structure, frame. *haykal ɛaẓmi* skeleton (of a body). *haykal ṭayyaara* framework of an aeroplane. *haykal l-ittiḥaad l-iʃtiraaki* the structure of the Socialist Union. **2** dummy.

هيكل *heekal* /n pl *hayaakil*/ *[Chr]* sanctuary (of a church).

ه ى ل [1]
هال *haal (i)* /vt/ to pile, heap up. *haalu ɛalee t-turaab* they piled the earth over him. - vn *hayalaan*; ava *haayil*.
اتهال *ʕithaal* /vi/ to be piled, be heaped up. - iva *mithaal*.
انهال *ʕinhaal* = *ʕithaal*. - iva *minhaal*.

ه ى ل [2] see ه و ل: *ʕahyal, haayil, hawaayil*

ه ى ل ا
هيلا *heela* <prob Copt> /interj/: *heela hubb, heela hubba* heave! heave ho! *ʃaal-(u) heela beela* he hustled (him) off.

ه ى ل ى ف
هايلايف *haylayif* <Engl *high life*> /adj invar/ upper-class. *b-yiɛtibir nafs-u min in-naas il-haylayif* he thinks he's upper-class.

ه ى م
هام *haam (i)* /vi/ to be distracted (especially by thoughts of one's beloved). *b-ahiim bi-ʕafkaar-i fil-maḥbuub* I am distracted by thoughts of my beloved. -vn *hayaam, hayamaan*; ava *haayim*.
هيمان *haymaan*↑ /adj */ infatuated, madly in love. *ʕana haymaan fi-ɛaalam il-fann*^{i} *wil-gamaal* I feel I am lost in the realm of art and beauty!

ه ى م ن
هيمن *haymin* /vi/ to preside, exercise control. *mafruuḍ ʕinn il-mudarris yihaymin ɛala faṣl-u* the teacher is supposed to control his class. - vn *haymana*; ava *mihaymin*.
مهيمن *muhaymin* /n/ Controller (epithet of God).

ه ى ن see ه و ن [1]: *hayyin*

(ه ى ه)
هيه *heeh*^{1} /fem n, pl *-aat*/ twenty-sixth letter of the Arabic alphabet. - also *haa, haaʕ hih*.
هيه *heeh*^{2} /interj/ hurrah!

ه ى ى ا see ه و و ا: *hiyya*

و

و

و *wi-, wa-* **1** /conj/ and. *ʃuraab ʕaḥmar wi-fanilla beeḍa* red socks and a white jersey. *wi-ʃeeh - miʃ ɛagb-u* and what's more, he doesn't like it. ‖ *wi-ʃeeh yaɛni* so what! **2** particle introducing an oath. *wi-ḥayaat-ak* by your life! *w-allaahi* by God! **3** particle introducing a circumstantial clause. *ya reet tigii-ni fluus w-ana ɢaaɛid kida* I wish I could get money while just sitting down like this. *ʈuul ɛumr-i w-ʃana nifs-i f-ɛarabiyya* all my life I've wanted a car.

¶ (pron) *wi-*... (suff) it depends on ..., aš in *ʃinta w-ḥaẓẓ-ak* it depends on your luck, *huwwa w-mazaag-u* it depends on his mood. — *ʃana wi-*(pron) *wi-*(def n) we'll go straight to ..., as in *ʃana wi-nta wil-maḥkama* we'll go straight to the court (to see what's going to happen). ‖ *ʃana w-huwwa wiz-zaman ʈawiil* one day I'll get even with him.

و ا ء

واء *waaʔ* onomatopoeia for the sound of a baby crying. *ʃil-waad ɛala ɢoolit waaʔ miṣ-ṣubḥ* the baby has been howling since morning. see further under و ء و

و ا ت

وات *waat* <Engl> /n pl *wattaat*/ *[elec]* watt. - also *watt*.

و ا ح

واحة *waaḥa* /n pl *-aat*/ oasis.

و ا د

واد *waad* = *walad* 1.

و ا غ ش

واغش *waaɤiʃ* **1** /coll n/ insect(s). **2** /adj invar/ (of people) common, worthless.

و ا ق

واق *waaq, waaq: waaq il-waaq* or *waaq il-waaq* where everything is topsy-turvy, wonderland, as in *ʃil-ḥagat-di ma-tiḥṣal-ʃ*^{i} *wala f-bilaad waaq il-waaq* these things don't happen, not even in wonderland.

و ا و

واو *waaw, waaw* /fem n, pl *-aat*/ twenty-seventh letter of the Arabic alphabet. ‖ *xallaa-ha waaw* he caused a lot of trouble.

و ا و ا

واوة *waawa, waawa* <perh Copt> /n pl *-aat, -aat*/ *[children]* hurt place. *ʃuuf il-waawa lli f-rigl-i* see the hurt on my leg.

و ء م

وأم *waʔm* /n/ good match, compatible type, suitable kind. *ʃil-huduum di miʃ waʔm-ak* these clothes don't suit you. *ʃil-waẓiifa miʃ waʔm-u* the job isn't good enough for him. ‖ *min waʔm* ... of the class of ..., as in *kull*^{i} *waaḥid yaaxud illi min waʔm-u* everyone should marry someone of his own class.

وائم *waaʔim* /vt/ to suit, match. *da miʃ if-faxṣ illi yawaʔim-ni* that's not the person who suits me. - vn *muwaʔma, miwaʔma*; ava/pva *miwaaʔim*.

اتوائم *ʔitwaaʔim* /vi/ **1** to be made to suit or match. **2** to become suitable or compatible. - ava/iva *mitwaaʔim*.

و ء و ء see also و ا ء

وأوأ *waʔwaʔ* (also *waqwaq*) /vi/ **1** to cry (of a baby). *nizil yiwaʔwaʔ min baṭn umm-u* he was born crying. **2** to stutter, stammer. - vn *waʔwaʔa*; ava *miwaʔwaʔ*.

اتوأوأ *ʔitwaʔwaʔ* /vi/ to stammer, stutter. - vn *tiwaʔwiiʔ*; ava *mitwaʔwaʔ*.

وبء
وبأ *wabaʕ, waba (i)* /vt/ **1 to infect, contaminate.** *ʕil-firaax il-ɛayyaana wabaʕit il-firaax is-saliima* the diseased chickens infected the healthy ones. **2** to corrupt or affect morally. *dool wabaʕu l-manṭiqa* they lowered the tone of the neighbourhood. ‖ *mara mawbuuʕa* a loose or immoral woman. - vn ***wabaʕaan, waba***; ava *waabiʕ*; pva *mawbuuʕ*.
وباء *wabaaʔ↑, waba* /n *ʕawbiʕa*/ **epidemic.**
اتوبأ *ʕitwabaʕ, ʕitwaba* /vi/ **passive of *wabaʕ*.** - iva *mitwibiʕ, mitwibi*.
انوبأ *ʕinwabaʕ, ʕinwaba* = *ʕitwabaʕ*.

وبخ
وبّخ *wabbax* /vt/ to scold, rebuke. - vn *tawbiix*; ava/pva *miwabbax*.
توبيخة *tawbiixa* /inst n, pl *-aat*/ a scolding. *ʕiddaa-lu tawbiixa kwayyisa* he gave him a good talking-to.
اتوبّخ *ʕitwabbax* /vi/ to be scolded, be rebuked. - iva *mitwabbax*.

وبر[1]
وبر *wabar* /n/ camel hair. *ṭaqiyya wabar* a skullcap made of camel hair. ‖ *ḥ-anḥal wabar-u* ≈ **I will give him a hard time.** - *dihaan ɛala wabar* see *dihaan*.
وبرة *wabara* /n/ nap, pile.
وبّر *wabbar* /vi/ to develop a pile, become fluffy. *ʕil-xoox miwabbar* the peaches are downy. *ʕiṣ-ṣuuf da wabbar min ʕawwil libs* this woollen cloth felted the first time it was worn. - vn *tawbiir*; ava *miwabbar*.

وبر[2] see وبور: *wabuur*

(وبش)
وبش *wabaʃ* /adj invar/ clumsy, gigantic. *fataḥt il-baab laqeet mara wabaʃ[i] kida quddaami* **I opened the door to find a hulking great woman before me.**
وبش *wabaʃ* /coll n, pl *ʕawbaaʃ*/ rabble, riff-raff. *saakin fi-ḥitta kull-a-ha naas ʕawbaaʃ* **I'm living in a rough neighbourhood.**

وبور
وابور *wabuur* <It *vapore*> /n pl *-aat*/ **1 (primus) stove.** *wabuur sibirtu* spirit stove. *wabuur gaaz* primus stove. **2** ship, motor-driven vessel. **3 locomotive, train.** *wabuur biḍaaɛa* goods train. *wabuur ʕiksibrees* express train. **4a** engine or motor. *wabuur ɛarabiyya* car engine. **4b** any of a variety of machines driven by a motor or engine. *wabuur il-ḥariiqa* fire-engine. *wabuur ṭiḥiin* grist mill. *wabuur ḥaliig* ginning factory. *wabuur zalaṭ* steamroller. - also *babuur* and *baguur*.

وبى see وبء: *waba, ʕitwaba, ʕinwaba*

وتد
وتد *watad* /n pl *witaad, ʕawtaad, witída*/ **1** peg, stake. ‖ *ɛuqdit watad* **clove hitch.** **2** *[agric]* dibble.

وتر
وتر *watar* /n pl *ʕawtaar*/ **1** string (of a musical instrument). ‖ *(ḍarab ɛala) l-watar il-ḥassaas* (to touch on) a sensitive spot. **2** *[geom]* **2a** chord. **2b** hypotenuse.
وترى *watari* /adj */ having strings, stringed. *ʕalaat waṭariyya* stringed instruments.
اتوتّر *ʕitwattar* /vi/ to become tense, become nervous. - vn *tawattur*; ava *mitwattar*.

وتى see وتء: *waata*

وثب see وسب

وثق see وسق[2]

وثن see وسن

وجاق
وجاق *wigaaq* <T *ocak*> /n pl *-aat*/ **1** brass bowl for holding a basket of draining *ṭaɛmiyya*. **2** oven in which irons are heated for pressing.

وجب
وجب *wagab[1] (yiwgab, yuugab, yagib)* /vi/ **1** to become incumbent, become obligatory. *ʕiṣ-ṣoom lissa ma-wagab-ʃ[i] ɛalee* **fasting is not obligatory for him yet.** **2** *[Isl]* to reach its prescribed time (of any of the five obligatory prayers). *taɛaala baɛd[i] ma tiwgab il-ɛaṣr[i] b-nuṣṣ[i] saaɛa* come half an hour after the afternoon prayer (has started). - vn *wiguub, wuguub*; ava *waagib*. ¶ *yagib* /vi/ modal of incumbency. *yagib ʕinn il-ʕinsaan yikuun ṭaahir ig-gism[i] wiḍ-ḍamiir* one must be pure in body and in conscience. *yagib ɛala l-muwaẓẓaf yaḍaɛ nuṣb[i] ɛenee ...* the civil servant must direct his attention to .... *yagib tizuruu-na kull[i] ʃwayyiteen* you ought to visit us every now and then. *ma-yagib-ʃ[i] tiɛmil kida* you shouldn't do that.
وجب *wagab[2]↓* /interj/ (response to a command or request) it is (only) my duty! your word is my command!
واجب *waagib* **1** modal of incumbency. *bi-ymaṭlu fil-ʕugra w-ʕabuu-ya waagib yiṭalib-hum* they are slow

in paying the rent, so father is obliged to demand it of them. *miʃ waagib tikallim ʕabuu-k bif-ʃakl[i] da* you shouldn't speak to your father like that. — /n pl *-aat*/ **2a** duty, obligation. *ma daam il-waaḥid miʕaddi waagibaat-u yixaaf min ʕeeh* as long as one is fulfilling one's obligations, what is there to be worried about? *ʕaleek waagib liihum* you have a duty towards them. *waaḥid ʕandu waagib* or *bitaaʕ waagib* one who is socially alert. *waagib ʕaleena* (it is our duty) ≈ it is we who should invite you (response to an offer of hospitality). *waagib ʕal-ḥaadir* it is the duty of the one who is around (reply to *waagib ʕaleena*). ‖*ʕamal waagib li-* to behave with deference to, show consideration for, act with respect towards, as in *da ʕamal waagib li-ʕumm-u wi-ma-radd[i]-ʃ ʕala ṣaḥbit-ha* he showed respect for his mother in not retorting to her friend. - *ʕadda waagib* to offer congratulations, condolences, get-well wishes etc. (on occasions when social convention so demands). **2b** /always def/ hospitality. *ʕamal* (or *ʕadda*) *il-waagib li-ṣḥaab-u* he gave hospitality to his friends. *ʠaamit bi-wagib-na ʕarbaʕa w-ʕiʃriin ʠiraaṭ* she showed us great hospitality. ‖*laazim taxdu l-waagib il-ʕawwil* you must have some refreshment first (said to visitors who are in a hurry to leave). **3** (school) homework.

واجباتلى *wagibatli* /adj * and pl *-yya*/ socially alert, never missing a chance to be courteous.

وجبة *wagba* /n pl *-aat*/ (complete) meal. *bi-yaakul talat wagbaat fil-yoom* he eats three meals a day. *fii wagbaat muḥaddada lir-rijiim* there are prescribed meals for dieting.

أوجب *ʕawgab[1]* /el/ more/most obligatory, compulsory or necessary. *ʕawgab ʃeeʕ ziyaarit il-mariiḍ* one's most important duty is to visit the sick.

وجّب *waggib* /vt/ to show respect for, behave with deference towards. *ʕinta laazim tiwaggib in-naas illi f-beet-ak* you should show respect to the people who are visiting you. - vn *tawgiib*; ava *miwaggib*.

اتوجّب *ʕitwaggib* /vi/ to be shown respect, be treated with deference. - iva *mitwaggib*.

أوجب *ʕawgab[2]* /vt/ to make compulsory, make obligatory. *rabb-i-na ma-ʕawgab-ʃ[i] ʕaleek illi fooʠ ṭaʠt-ak* God did not ask you to do what is beyond your capabilities. *ma-fii-ʃ muugib liz-ziyaara di* there is no necessity for such a visit. - vn *ʕiigaab*; ava *muugib*; pva *muugab*.

إيجاب *ʕiigaab* /n/ **1** *[Isl]* offer of a contract. *ʕil-ʕiigaab wil-qabuul* the offer and acceptance of a contract, e.g., in a marriage ceremony. **2** affirmation. *bil-ʕiigaab* in affirmation.

إيجابى *ʕigaabi* /adj */ positive, responsive, active. *ʕil-ḥiyaad il-ʕigaabi* active neutrality.

¶ *ʕigabiyyan* /adv/ positively.

إيجابيّة *ʕigabiyya* /n/ **1** positivism. **2** /pl *-aat*/ positive feature, point in favour.

موجب *muugib[1]* /n pl *-aat*/ requirement.

¶ *bi-muugib* /prep/ by authority of, by virtue of. *ʕil-filuus tittaaxid bi-muugib if-fiik bass* money can only be taken on the authority of a cheque. *tistaḥaʠʠ[a] ʕalaawa b-muugib xidmit-ak iṭ-ṭiwiila* you are entitled to a rise by virtue of your long service.

موجب *muugab, muugib[2]* /adj/ *[elec]* positive.

استوجب *ʕistawgib (yistawgib, yastawgib[i])* /vt/ **1** to deserve, merit. *ma-fii-ʃ ḥaaga tistawgib il-xinaaʠa di kull-a-ha* there is nothing to justify such a quarrel. *ʕana m-astawgib-ʃ[i] da kull-u minnak* I have done nothing to deserve such (bad) treatment from you. **2** to require. *di mas ʕala tistawgib l-intibaah* this is a matter that calls for attention. - ava *mistawgib*.

و ج ج

وجّ *wagg (i)* /vi/ to flare, flare up. *ʕin-naar waggit fi-hduum-i* fire flared up in my clothes. *ʕil-babuur wagg[i] f-wiʃʃ-i* the primus stove flared up in my face. *ʕil-xinaaʠa wagga miṣ-ṣubḥ* the quarrel has been on for a long time. - vn *waggg, wagagaan*; ava *waagig*.

و ج د

وجد *wagad[1] (yagid)* /vt/ to encounter, find, discover. -/the literary passive occurs/ *yuugad ʕandina baṭṭiix kitiir* there are lots of water-melons at our place. - vn *wuguud*; ava *waagid*; pva *mawguud*.

وجد *wagad[2] (yiwgid, yuugid)* /vt/ to cause, create. *ʕif-fitiima hiyya lli wagadit iz-zaʕal benna* it was bad language that caused the rift between us. - ava *waagid*; pva *mawguud*.

وجود *wuguud* /n/ **1** presence, existence. *fi-wuguud-u* in his presence. **2** *ʕil-wuguud* the universe. ‖*yaaʕis min il-wuguud* he is in complete despair.

وجودى *wuguudi* /adj */ existentialist.

وجوديّة *wugudiyya* /n/ existentialism.

واجد *waagid* **1** /adj invar/ plentiful. *ʕandu fluus waagid* he has a lot of money. **2** /n/ Creator (epithet of God).

موجود *mawguud* /adj */ **1** present, in attendance. *fii ḥadd[i] mawguud* is anyone here? *sitt il-beet miʃ mawguuda* the lady of the house is not here. *rabb-i-na mawguud* God is with us (and will take care of our problems) (said at times of difficulty). **2** available, to hand. *ʕil-kutub il-mawguuda ḥaliyyan* the books available at present. *huwwa da in-nooʕ il-waḥiid illi*

mawguud fis-suuq this is the only kind available on the market. *ma-titɛibii-ſ nafs-ik - ſana ḫ-aakul illi mawguud* don't put yourself to any trouble - I'll eat anything that's going. **3** present, current, existing. *ſir-raſy il-mawguud* current opinion. *ſin-niẓaam il-mawguud* existing practice.

وجد *wagd* /n/ love (in poetry and songs). *ſil-wagd^{i} zaad ɛal-buɛaad* (our) love has increased with our being apart.

وجدان *wigdaan, wugdaan* /n/ (inner) consciousness, imagination, mind. *hiyya ɛayſa f-wigdaan-i* she is always in my thoughts. *ſil-wigdaan il-maṣri* the Egyptian mind. *ſil-wigdaan l-igtimaaɛi↑* social consciousness.

اتوجد *ſitwagad* /vi/ **1** to become available, come into existence. *ſin itwagad il-ɛeef yibqa l-malḫ^{i} baſraqa [prov]* (if there is bread, salt is a luxury) ≈ first things first. **2** to be found. - ava/iva *mitwigid*.

انوجد *ſinwagad* = *ſitwagad*. - ava/iva *minwigid*.

اتواجد *ſitwaagid* /vi/ to become present, become available. *laazim kull-i-na nitwaagid fil-maḫaṭṭa qabl il-qaṭr^{i} b-saaɛa ɛal-ſaqall* we must all be present at the station at least one hour before the train arrives. - vn *tawaagud*; ava *mitwaagid, mutawaagid↑*.

أوجد *ſawgad (yiwgid, yuugid)* /vt/ to cause, create. *ſinta lli ſawgadt il-muſkila wi-nta lli tḫill-a-ha* you are the one who created the problem and you should be the one to solve it. - vn *ſiigaad*; ava *muugid*.

وج ز

وجيز *wagiiz↑* /adj */ brief. *baɛd^{i} mudda wagiiza* after a short while.

أوجز *ſawgaz↑ (yiwgiz, yuugiz)* /vt/ to make brief, make concise. *ſiwgiz fil-ɛibaara* make the statement short. - vn *ſiigaaz*; ava *muugiz*; pva *muugaz*.

وج س

اتوجّس *ſitwaggis, ſitwaggas* /vi/ to feel apprehensive, have premonitions (of evil). *ḫarakaat-u xallit-ni ſatwaggis mil-mawquuɛ da* his behaviour caused me to be apprehensive about this matter. - ava *mitwaggis*.

توجّس *tawaggus* /n pl *-aat*/ apprehension, premonition. *siib-ak mit-tawaggusaat di* rid yourself of these fears.

وج ع

وجع *wagaɛ^{1} (a)* /vt/ to hurt, cause pain to. *dimaaɣ-i b-tiwgaɛ-ni* I have a headache. *ſintu b-tiwgaɛu (fi-) nafuux-i* (or *raas-i*) you're giving me a headache. ‖ *ſallaah yiwgaɛ qalb-ak [abus]* ≈ may you suffer greatly! - vn *wagaɛ, wagaɛaan*; ava *waagiɛ*; pva *mawguuɛ*.

وجع *wagaɛ^{2}* /n pl *ſawgaaɛ*/ pain. *ɛandi wagaɛ fil-miɛda* I've got a stomach-ache. *wagaɛ il-baṭn^{i} wala kabb iṭ-ṭabiix [prov]* (to a fool) stomach-ache (through over-eating) is preferable to throwing away (surplus) food. ‖ *wagaɛ saaɛa wala kull^{i} saaɛa [prov]* pain for an hour rather than pain every hour (said when something unpleasant has to be endured in order to gain some relief). - *wagaɛ qalb* thankless toil, worthless effort, as in *tarbiyyit il-wilaad il-yomeen dool baqit wagaɛ qalb* raising children these days has become a real heartache, *ɛiſt-i qaraf wi-wagaɛ qalb* my life is miserable and wearisome. - *ga-k wagaɛ fi- [abus]* may you be struck in ..., as in *ga-k wagaɛ fi-nafuux-ak ya-bn il-kalb* may you be struck in the head, you son of a bitch! *ga-k wagaɛ fi-baṭn-ak* may you suffer pain in your stomach!

¶ *bil-wagaɛ* hardly worth anything. *dool ſitneen gineeh bil-wagaɛ* these are two miserable pounds. *da maqaal waaḫid bil-wagaɛ illi katabt-u* it is only one single article that I wrote.

وجعان *wagɛaan* /adj */ **1** in pain. **2** complaining exaggeratedly of one's pain.

وجيعة *wagiiɛa* /n pl *mawaagiɛ, wagaayiɛ*/ pain, painful spot (particularly used in imprecations). *ga-k wagiiɛa f-baṭn-ak* may you have a stomach-ache!

¶ *ga* (or *gat*) *ɛal-wagiiɛa* it hit the nail right on the head, it found the right point. *ṭabɛan miwaafiq ɛafaan kalam-ha ga-lak ɛal-wagiiɛa* of course you agree, since what she says is what you wanted to say (or do) all along.

مواجع *mawaagiɛ* /pl n/ **1** old wounds, bad memories, bad experiences. *bi-yqallib ɛalayya l-mawaagiɛ* he stirs up old wounds of mine. **2** weak points (of which another can take advantage). *miraat-u ɛarfa mawagɛ-u feen* his wife knows where his weak spots lie.

اتوجع *ſitwagaɛ* /vi/ to be hurt, be caused pain. - iva *mitwigiɛ*.

انوجع *ſinwagaɛ* = *ſitwagaɛ*. - iva *minwigiɛ*.

اتوجّع *ſitwaggaɛ* /vi/ **1** to suffer pain. **2** to voice one's pain in an exaggerated manner. - ava *mitwaggaɛ*.

اتواجع *ſitwaagiɛ, ſitwaagaɛ* /vi/ to show or voice pain in an exaggerated manner. *ſuqɛud ſitwaagiɛ baqa ka-ſinn^{i} ma-ḫadd^{i}-ſ xad ḫuqna ſilla-nta* go on moaning now, as if no one but you had been given an injection. ‖ *ſinta b-titwaagiɛ li-miin* who are you fishing for sympathy from? - ava *mitwaagiɛ*.

وج ق see وج ا ق: *wigaaq*

وج ل

وجل *wagal* /n/ reticence.

و ج م

وجم *wagam (a)* /vi/ to feel despondent. *saaɛit ma ʃaaf iz-zuwwaar wagam* as soon as he saw the visitors he became dejected. - vn *wuguum*; ava *waagim*.

وجوم *wuguum* /n/ despondency, dejection.

و ج ن

وجنة *wagna* /n pl *-aat, waganaat*/ cheek.

و ج ه

جهة *giha* /n pl *-aat*/ **1** direction. *ʕinta raayiħ ʕanhi giha - gihit iz-zatuun* where are you heading, towards Zeytoon? *ʃuft iʃ-ʃawiiʃ gayy[i] gihat-i* I saw the sergeant coming towards me. *ʕiʃ-ʃibbaak bi-yṭull[i] gihit in-niil* the window faces the Nile. *ʕil-ɛayyil qaaɛid bi-yqaṭṭaɛ waraq wi-b-yirmi f-kull il-gihaat* the boy is tearing up paper and throwing (the pieces) in all directions. *maayil gihat il-yimiin* tending to the right. **2a** side. *ʕana ħ-aɛaddi ɛal-giha t-tanya* I'll cross over to the other side. **2b** side, aspect, viewpoint. *ma-tʃil-ʃ[i] hamm il-mawḍuuɛ mig-giha di biz-zaat* don't worry about the problem from this particular point of view. *la ya duktuur mig-giha di ʕinta ɤalṭaan* no, doctor, you are wrong about this. *min gihat-i ʕana ma-ɛandii-ʃ maaniɛ ʕasaafir* as far as I am concerned I don't mind travelling. *min-giha ... wi-min giha tanya* on the one hand ... and on the other hand, as in *min giha maksuuf ʕaruuħ il-beet bil-ħaala di wi-min giha tanya m-aqdar-ʃ[i] ʕanaam barra* on the one hand I am ashamed to go home in this state, but on the other hand I can't sleep out. **3** district, locality, place. *gihit baab il-luuq* the Bab el-Luq quarter. *gihat il-ɛamal↑* place of work. *raaħ qism il-buliṣ fig-giha lli saakin fii-ha* he went to his local police station. **4** administrative division, department (of the government), establishment. *ʕayy[i] ʃhaada min giha ħukumiyya laazim tikuun maxtuuma* any certificate from a government department should be stamped (with a seal). *laazim titʃawru maɛa l-gihaat il-muxtaṣṣa* you should consult with the authorities in charge. *ʕig-gihaat il-ħukumiyya* government departments. *ʕig-gihaat illi baɛtaa-kum bi-titħammil maṣarif-kum* the establishments that sent you cover your expenses.

وجه *wagh* /n pl *wuguuh, ʕawguh*/ **1** aspect, facet. *ʕaħad wuguuh il-muʃkila* one aspect of the problem. *ʕeeh wagh iʃ-ʃabah been il-mawḍuɛeen dool* what is the point of similarity between these two matters? *dool mutaʃabhiin min kull il-wuguuh* these are similar from every point of view. ‖ *li-.. wagh* having pertinence, as in *kalam-ha lii wagh* there's a point in what she says. - *ʕil-wagh il-baħari* Lower Egypt. - *ʕil-wagh il-ɛibli* Upper Egypt. **2↑** face. ‖ *ɛi-wagh* facing up to, as in *ʕurubba wiɛfit ɛi-wagh[i] turkiyya tultumiit sana* Europe stood up to Turkey for 300 years. - *waghan li-wagh* face to face. ¶ *li-wagh* /prep/ for the sake of, as in *ħasana li-wagh illaah [beggars]* alms for God's sake. - *ɛala* (or *bi-*)*wagh* /prep/ in the manner of, by way of, as in *ɛala wagh it-taqriib* approximately, *ɛala wagh is-surɛa* quickly, *ɛala wagh il-ɛumuum* generally.

واجهة *wagha* /n pl *-aat*/ front, façade. *waghit il-ɛimaara* the façade of the building. ‖ *laazim tigiib bint[i] laṭiifa tkuun wagha lil-maħall* you should get a pleasant girl to act as an attraction for the shop.

وجهة *wigha* /n pl *-aat*/ **1** direction. *wighit-ak feen* where to? **2** point of view. *ʕil-mas ʕala ɛiiha wighaat kitiira* there are various points of view in the matter. *min il-wigha di ʕana msallim maɛaak* from this particular viewpoint I am in agreement with you. *wighit naẓar-i ʕana ɤeer kida* my own opinion is different.

وجاهة *wagaaha* /n/ elegance, style. *ʃabaab il-ʕayyaam di labsiin ʕaaxir wagaaha* the youth of today are very smartly dressed. ‖ *ʕiqtiraaħ fi-ɤaayit il-wagaaha* a very good suggestion.

وجيه *wagiih* **1** /adj pl *wugaha*/ elegant, stylish. ‖ *da suʕaal wagiih* that's a good question. **2** /n pl *wugahaaʕ*/ *[obsol]* title of, and form of address to, a man of high social standing, particularly of the royal family.

أوجه *ʕawgah* /el/ more/most elegant or stylish.

وجّه *waggih, waggah* /vt/ **1** to direct, give direction to. *waggih ihtimaam-ak lil-ħaaga lli tinfaɛ* direct your attention to what is useful. ‖ *ʕin-niyaaba ma-waggahit-luu-ʃ ʕayy[i] tuhma* the prosecution did not charge him with any crime. **2** to guide, steer. *bi-ywaggihu ʃ-ʃuvl[i] w-yibqu maskiin fi-ʕdee-hum kull[a] ħaaga* they direct the work and control it absolutely. - vn *tawgiih*; ava *miwaggih, muwaggih*; pva *muwaggah*.

توجيه *tawgiih* /n pl *-aat*/ directive. *fii tawgihaat maktuuba b-tiigi min fooq* there are written directives which come from above.

توجيهى *tawgiihi* /adj */ directing. ‖ *ʕiʃ-ʃihaada t-tawgihiyya* or *ʕit-tawgiihi [obsol]* (1) certificate of secondary education. (2) last year of secondary school.

موجّه *muwaggih* /n */ **1** director of activities (in a school, club, civic organization etc.). **2** school inspector.

اتوجّه، توجّه *ʕitwaggah, tawaggah↑* /vi/ to turn to, direct oneself towards. *ʕil-yoom illi titwaggah fii lil-manṭiqa t-taɛlimiyya* the day you go to the educational zone. *ʕawwil ħaaga tawaggahna lik-kaɛba* first we

turned towards the Kaaba. - vn *tawagguh↑*; ava *mitwaggih, mutawaggih↑*.

واجه *waagih* /vt/ to confront, face. *fii duwal waghit-ha muʃkilit il-guuʕ* there are countries that have been faced with the problem of hunger. *marḥalit il-muwagha f-ʃamla maʕa l-ʕadiww* the stage of total confrontation with the enemy. ‖*fi-muwagha* to the face of, as in *ʔana qult ik-kalaam da fi-muwaghit-u* I said so to his face. - vn *muwagha*; ava *miwaagih, muwaagih↑*; pva *muwaagah↑*.

اتواجه *ʔitwaagih* /vi/ to be confronted, be faced. - iva *mitwaagih*.

اتّجه *ʔittagah* /vi/ to take a direction, turn, head (for s.th.). *ḥa-nittigih li-feen wi-ʔizzaay* where shall we head for and how? *ʔittigih yimiin* turn to the right! - vn *ʔittigaah*; ava *mittigih*.

اتّجاه *ʔittigaah* /n pl *-aat*/ **1** direction, course. *mumkin taaxud il-qaṭr[i] min maṣr[i] f-ʔayy[i] ʔittigaah* you can take the train from Cairo in any direction. ‖*faariʕ bi-ttigaah waaḥid* one-way street. **2** trend, tendency. *fii ʔittigaah iʃtiraaki fil-ʕaalam in-nahar-da* there is a trend towards socialism in the world today.

تجاه *tigaah, tugaah↑* /prep/ towards. *ʕamalt[i] wagb-i tgaah-u* I did what is right by him. *miʃiina tigaah ig-gamʕa* we walked towards the University.

استوجه *ʔistawgah (a)* /vt/ **1** to consider (s.o.) good-looking or elegant. ‖*baayin ʕaleek mistawgah nafs-ak* you obviously think you're very dashing. **2** to select for elegance. *ʔinta b-tistawgah iz-zabaayin walla ʔeeh* do you pick out the elegant customers first or what? - vn *ʔistiwgaah*; ava *mistawgah*.

و ج و ج

وجوج *wagwig* /vi/ to flare up intensely. - vn *wagwaga*; ava *miwagwig*.

و ح د

حدة *ḥida[2]: ʕala ḥida* separately.

وحد *waḥd (also li-waḥd-)* /adv, w pron suff also *waḥdii-*/ alone, by oneself. *da saakin fil-beet (li-)waḥd-u* he lives in the house by himself. *bi-naakul (li-)waḥdii-na kull[i] leela* we eat alone every night. *tiqdar tirfaʕ-u (l-)waḥd-ak* can you lift it by yourself? *miʃ iʃ-ʃaqqa (l-)waḥd-a-ha* (or *li-waḥid-ha) lli tḥaraqit - laʔ da l-beet kull-u kamaan* it wasn't just the flat which was burned out, but the whole building as well.

وحداني *waḥdaani* /adj */ alone in the world. *hiyya waḥdaniyya ma-lhaa-ʃ siwaa-k ya rabb* she is alone in the world; she has no-one but you, Lord. *ʔana waḥdaani maqtuuʕ min ʃagara* I'm alone in the world with no relatives.

وحدانيّة *waḥdaniyya* /n/ oneness (of God). *daliil ʕala waḥdaniyyit illaah* a proof of God's oneness.

وحدوى *waḥdawi* /n */ *[pol]* unionist.

وحدة *wiḥda, waḥda↑* /n pl *-aat*/ **1a** unit, elementary unit. *ʔil-wiḥda l-ʔasasiyya lil-ittiḥaad l-iʃtiraaki mukawwana min ʕiʃriin ʕuḍw* the basic unit of the Socialist Union consists of twenty members. *wiḥdit il-muqawma hiyya l-ʔoom [elec]* the unit of resistance is the ohm. **1b** branch, regional or local centre. *wiḥda ṣiḥḥiya* local health centre. *wiḥda ziraʕiyya* regional agricultural centre. *wiḥda mugammaʕa* (rural) community centre. **1c** *[mus]* a single occurrence of the pattern of a rhythmic mode. *ʔil-waḥda ṣ-ṣuʁayyara* 2/4 time. *ʔil-waḥda k-kibiira* 4/4 time. **2** unity. *ʔil-wiḥda l-waṭaniyya* national unity. **3** solitude, loneliness. *ʔig-gawaaz ma-huwwaa-ʃ ʕilaag lil-wiḥda* marriage is no cure for loneliness. *ʔil-wiḥda xayrun min galiis is-suuʔ [prov]* solitude is better than bad company. *faʕar bil-wiḥda* he felt lonely. ‖*leelit il-wiḥda* first night spent by the dead in the tomb.

وحيد *waḥiid* /adj **pl** *wuḥaad, waḥidiin*/ sole, only. *ʔibn-a-ha l-waḥiid* her only son. *ʔig-geeʃ ma-xad-uu-ʃ ʕaʃaan waḥiid* he was not conscripted because he's an only son. *nusxa waḥiida* a single copy. ‖*waḥiid il-ʔabaween* an only child. - *waḥiid il-qarn* rhinoceros. - *huwwa l-waḥiid fik-kabaab* he makes the best kebab around. - /adverbially/ *qaaʕid waḥiid* he is sitting by himself.

واحد *waaḥid* **1** /num/ one. *waaḥid fil-miyya* one percent. ‖ *ʔiʃ-ʃuxl[i] da nimra waaḥid* this is top quality work. - *ʕenee makruuma ʕaʃra w-waaḥid* he is one-eyed. - *waaḥid wi-talatiin* (1) Egyptian card game. (2) *[coarse]* masturbation. - *qaal waaḥid wi-sittiin* he took to his heels. — /fem *waḥda*/ **2** /adj/ **2a** single, lone. *nimra waḥda bass* only one number. **2b** uniform. *kull-a-ha loon waaḥid* it is all the same colour. ‖*kull-u-kum waaḥid ʕandi* you are all the same as far as I am concerned. **3** /pron/ someone, somebody, a certain person, a certain .... *ʔayy[i] waaḥid* anyone. *waaḥid ʏeer il-muwaẓẓaf ig-gidiid* someone other than the new employee. *fii waaḥid barra ʕayz-ak* there is someone outside to see you. *ʔana qabilt[i] waaḥid muhandis qal-li kida* I met a certain engineer who told me so. ‖ *ʔil-waaḥid* one (used very frequently instead of the personal pronoun), as in *ʔil-waaḥid laazim yiftaʏal bi-ḍamiir* one should work conscientiously, - *ʔil-waaḥid xalaaṣ miʃ qaadir yistaḥmil ʔaktar min kida* I've taken

just about all I can stand. - *kull[i] waaḥid fi-* or *ʕil-waaḥid fi-* each one of, as in *kull[i] waḥda fiina miḥtaaga l-waaḥid yiḥmii-ha* every woman among us needs a man to protect her, *ʕil-waaḥid fiikum laazim yiʕmil illi ʕalee* each of you must play his part. **4** /n/ unit, one (of many). *ʕaawiz waaḥid walla tneen* do you want one or two? *wala waaḥid* not a single one. *bi-ybiiʕu l-beeḍ bil-waḥda* they sell eggs singly. *ʕil-fakha di mitnaqqiyya bil-waḥda* (these fruits are individually selected) ≈ these are choice fruits. *dool maʕdudiin bil-waḥda* these are counted exactly. ‖*waaḥid waaḥid* one by one. - *waḥda waḥda* slowly, easily, gently, as in *suuq waḥda waḥda* drive slowly, *waḥda waḥda ʕal-ʕayyil* be gentle with the kid. - *ʕala waḥda w-nuṣṣ* keeping to the *baladi* drum rhythm (in folk dancing). - *maʃya ʕala waḥda w-nuṣṣ* walking with a (provocative) wiggle. — /n/ **5** One (epithet of God).

وحّد *waḥḥid* or *waḥḥad* /vt/ **1** to join together, unite. *ʕabd in-naaṣir ḥaawil yiwaḥḥad il-ʕarab* Nasser tried to unite the Arabs. **2** to standardize, unify. *hiyya l-ḥukuuma lli bi-twaḥḥid il-maqayiis* it's the government which standardizes measures. - vn *tawḥiid*; ava *muwaḥḥid*; ava/pva *miwaḥḥid, miwaḥḥad*; pva *muwaḥḥad*.

¶ *waḥḥad allaah* to pronounce the formula *la ʔilaaha ʔilla llaah*. ‖*ma-ʕanduu-ʃ wala ʔirf[i] ywaḥḥid allaah* he hasn't got a penny to his name. - *wala waaḥid yiwaḥḥid allaah* not a living soul. - *waḥḥiduu* interjection for breaking an embarrassing silence, in the hope that the response *la ʔilaaha ʔilla llaah* will make people relax and talk.

التوحيد *ʔit-tawḥiid* /n/ **1** the doctrine of the oneness of God. **2** *[Isl]* theology.

موحّد *miwaḥḥad, muwaḥḥad* /adj */ unified. ‖*taʕriifa mwaḥḥada* flat rate.

اتوحّد *ʔitwaḥḥad* /vi/ passive of *waḥḥad*. - iva *mitwaḥḥad*.

متوحّد *mutawaḥḥid* /n */ *[Chr]* hermit, anchorite.

اتّحد *ʔittaḥad* /vi/ to join together, unite. *ʔis-sittaat ittaḥadu w-qaṭʕu l-ḥagaat il-ɣalya* the women united and boycotted the expensive items. *ʔik-kabriit yittiḥid maʕa l-ʔuksujiin* sulphur unites with oxygen. ‖*ʔil-ʔumam il-muttaḥida* the United Nations. - *ʔil-wilayaat il-muttaḥida* the United States. - vn *ʔittiḥaad*; ava *muttaḥid, mittiḥid*.

اتّحاد *ʔittiḥaad* /n pl *-aat*/ union. *ʔittiḥaad iṭ-ṭullaab* students' union. *ʔil-ittiḥaad is-suvyitti* the Soviet Union. *ʔil-ittiḥaad l-iʃtiraaki (l-ʕarabi)* the (Arab) Socialist Union.

اتّحادى *ʔittiḥaadi* /adj/ *[pol]* federal.

و ح س

وحس *waḥas (i)* /vt/ to confuse, embarrass. *ʔaqall[i] muʃkila b-tiwḥis-u* the smallest problem throws him into confusion. *maa lak mawḥuus kida* why are you so confused? ‖*ya mawḥuus ʕala ʕeen-ak [women]* you muddle-headed dimwit! - vn *waḥasaan*; ava *waaḥis*; pva *mawḥuus*.

وحسة *waḥsa* /n pl *-aat*/ muddle, confusion, dilemma. *ʔeeh il-waḥsa s-sooda lli-ḥna fiiha di* what's this terrible mess we're in?

اتوحس *ʔitwaḥas* /vi/ to be or become confused or embarrassed. - ava/iva *mitwiḥis*.

انوحس *ʔinwaḥas* = *ʔitwaḥas*. - iva *minwiḥis*.

و ح ش [1]

وحش *waḥʃ* /n pl *wuḥuuʃ*/ wild animal, beast. *law tigri ya-bn[i] ʔaadam gary il-wuḥuuʃ ʕeer rizq-ak ma-tḥuuʃ [prov]* ≈ man proposes, God disposes. ‖*di mara waḥʃ* she's a gluttonous woman.

وحشى *waḥʃi* /adj */ wild, barbaric, fierce. *muʕamla waḥʃiyya* cruel treatment. ‖*ḥumaar waḥʃi* zebra.

وحش *wiḥiʃ* /adj */ **1** bad, unpleasant, nasty. *riḥt-u wiḥʃa* it has a nasty smell. *raagil wiḥiʃ* an unpleasant man. *ḥaṣalit-lu ḥaaga wiḥʃa* he had an unpleasant experience. *kida wiḥiʃ [children]* that's a bad thing (to do). *ma-tʃuf-ʃ[i] wiḥiʃ* may you never know any unpleasantness (conventional reply to *waḥaʃt-i-na* q.v.). **2** ugly. *taqaṭiʕ-ha wiḥʃa* her features are ugly.

أوحش *ʔawḥaʃ[1]* /el/ **1** worse/worst. **2** uglier/ugliest.

وحاشة *waḥaaʃa* /n/ **1** unpleasantness, unkindness. *balaaʃ il-waḥaaʃa di* stop this unkind behaviour! **2** ugliness. *fi-ɣayit il-waḥaaʃa* extremely ugly.

وحّش *waḥḥaʃ[1] (a)* **1** /vt/ **1a** to make unpleasant. *ʔeeh illi waḥḥaʃ-ak kida* what made you become so unkind? **1b** to make ugly. *ʔinta ʕammaal tiwaḥḥaʃ fil-fustaan leeh* why are you making the dress so ugly? — /vi/ **2** to become fierce-looking. *ʔaxuu-ki waḥḥaʃ wi-baqa yxawwif* your brother has become so fierce-looking that he is frightening. **3** to become overgrown (of plants and animals). *ʔil-quuṭa kibrit wi-waḥḥaʃit* the tomato plants have grown up and become wild. - vn *tawḥiiʃ*; ava/pva *miwaḥḥaʃ*.

اتوحّش *ʔitwaḥḥaʃ* /vi/ **1** to become fierce or fierce-looking. **2** to become overgrown (of plants and animals). - ava *mitwaḥḥaʃ*.

اوحشّ *ʔiwḥaʃʃ* /vi/ to become ugly, become unattractive. *lamma l-ḥibla tiwḥaʃʃ[i] yibqa lli f-baṭn-a-ha walad* when a pregnant woman becomes unattractive it means she is carrying a boy. - ava *miwḥaʃʃ*.

استوحش *ʔistawḥiʃ[1], ʔistawḥaʃ[1]* /vt/ **1** to consider ugly.

ʔistawḥafit il-ɛariis she considered the suitor too ugly (and refused to marry him). **2** to select for ugliness. ʔistawḥaf fustaan wi-ʃtara-hu-lha he picked an ugly dress and bought it for her. — /vi/ **3** to become fierce, become beastly. ʔistawḥaf fil-ʔakl he wolfed down the food. - vn ʔistiwḥaaf; ava mistawḥif, mistawḥaf.

وح ش [2]

وحش waḥaf (a) /vt/ to be missed by (s.o.). waḥaft-i-na we missed you (conventional greeting after a period of separation or absence). ḥa-tiwḥaf-na ktiir we shall miss you a lot. ʔinta waḥif-ni win-nabi w-waḥfaa-ni l-qahwa lli kunna nifrab-ha maɛa baɛḍ I miss you, you know, and I miss the coffee we used to drink together. lik waḥfa you have been missed. - vn waḥafaan, waḥfa; ava waaḥif.

وحّش waḥḥif, waḥḥaf [2] /vi/ *[obsol]* to sing tawaḥiif. - vn tawḥiif; ava miwaḥḥif.

توحيشة tawḥiifa /n pl -aat, tawaḥiif/ *[obsol]* poem lamenting the departure of the month of Ramadan chanted from roof tops between midnight and dawn.

أوحش ʔawḥaf [2]: la ʔawḥaf allaah minkum (may you not be missed for long) may we soon see you again!

استوحش ʔistawḥif [2], ʔistawḥaf [2] /vi/ to feel lonely. lamma daxalt il-beet istawḥaft [i] w-qalb-i tqabaḍ upon entering the house I felt desolate and had a sense of gloom. - vn ʔistiwḥaaf; ava mistawḥif, mistawḥaf.

¶ ʔistawḥaf li- to long for. ʔana stawḥaft [i] lil-ɛiyaal I am longing to see the children.

وح ل

وحل waḥal (i) /vt/ **1** to bog down (in mud). ḥaasib ḥa-tiwḥil nafs-ak fiṭ-ṭiin careful, you will get yourself stuck in the mud! **2** to implicate, involve (in trouble etc.). ʔinta waḥalt-i-na maɛaak fil-qaḍiyya min ɣeer luzuum you've unnecessarily involved us with you in the case. ʔinta mawḥuul fiiha l-fuʃt-ak you are in it up to your ears. - vn waḥalaan, waḥla; ava waaḥil; pva mawḥuul.

وحلة waḥla /n/ mire. ʔism-u baqa fil-waḥla his name was dragged in the mud.

وحل waḥl [1] /n pl ʔawḥaal, wuḥuul/ mud.

وحلان waḥlaan /adj */ stuck, aground. ʔil-markib waḥlaan wi-dool mif ɛarfiin yiṭallaɛuu the boat is stranded and they cannot free it. dool waḥlaniin fi-muʃkila ɛawiiṣa they are bogged down in a big problem. ʔintu waḥlaniin fi-ʔeeh what (triviality) is it that you are caught up in?

اتوحل ʔitwaḥal /vi/ passive of waḥal. - iva mitwiḥil.

انوحل ʔinwaḥal = ʔitwaḥal. - iva minwiḥil.

وحّل waḥḥal **1** /vt/ **1a** to cover with mud. ʔinta waḥḥalt [i] hduum-ak xaaliṣ you've smothered your clothes with mud. **1b** to turn into mud. ‖ ʔinta waḥḥalt id-dunya you've made a big mess. — /vi/ **2** to become muddy. ʔil-ʔarḍ [i] waḥḥalit the ground turned to mud. **3** to wade (in mud). ma-twaḥḥal-ʃ [i] fil-maṭara don't go wading out in the rain. - vn ṭawḥiil; ava/pva miwaḥḥal.

استوحل ʔistawḥal /vi/ **1** to consider (too) muddy. **2** to select for muddiness. - ava mistawḥal.

وح م

وحمة waḥma /n/ **1** craving for a certain type of food (experienced particularly by a pregnant woman). **2** /pl -aat/ birthmark.

وحم waḥam /n/ craving experienced by a pregnant woman.

اتوحّم ʔitwaḥḥam /vi/ to experience a craving (for particular kinds of food, especially of a pregnant woman). ʔil-ḥaamil bi-titwaḥḥam ɛaadatan ɛala l-ḥawaadiq a pregnant woman usually craves salty foods. - vn tawḥiim; ava mitwaḥḥam.

توحيمة tawḥiima /inst n/ a craving. ʔit-tawḥiima di laazim sabab-ha l-ḥaml this particular craving you have now must be caused by pregnancy.

وح وح

وحوح waḥwaḥ /vi/ **1** to whine, snivel (particularly of a child). **2** to chatter from cold (of the teeth). - vn waḥwaḥa; ava miwaḥwaḥ.

اتوحوح ʔitwaḥwaḥ = waḥwaḥ. - ava mitwaḥwaḥ.

وح وى

وحوى waḥawi nonce word in children's Ramadan jingle.

وح ى [1]

وحى waḥy /n/ **1** inspiration. **2** *[theol]* inspiration, revelation.

أوحى ʔawḥa /vi/ **1** to give inspiration. ʔeeh illi ʔawḥaa-lik bil-fikra di what gave you that idea? rabb-i-na ʔawḥaa-lu yhaagir min makka God inspired him to emigrate from Mecca. **2** to be suggestive, be indicative. kull [a] ḥarakat-ha b-tuuḥi big-gins her whole behaviour is sexually suggestive. - vn ʔiiḥaaʔ; ava muuḥi.

استوحى ʔistawḥa [1] /vt/ to derive or seek inspiration from. ʔil-looḥa di mustawḥaa min ir-riif il-maṣri this painting was inspired by the Egyptian countryside. - vn ʔistiḥaaʔ; ava mistawḥi, mustawḥi; pva mustawḥa.

وحى [2]

وحى *waḫa*[1] *(i)* /vt/ to goad, incite. *miin illi waḫaa-k ɛaṭ-ṭalaaq* who gave you this bad idea of divorce? *ʕinta mawḫi ɛalayya* you've been incited against me. -vn *waḫayaan*; ava *waaḫi*; pva *mawḫi*.

وحّى *waḫḫa* = *waḫa*. -vn *tawḫiyya*; ava/pva *miwaḫḫi*.

اتوحّى *ʕitwaḫḫa* /vi/ to be goaded or incited. -iva *mitwaḫḫi*.

اتّحى *ʕittaḫa* /vt/ to victimize incessantly or obsessively. *ʕittaḫit il-waad biḍ-ḍarb*[i] *lamma krih-ha* she kept on beating the boy until he hated her. -ava *mittiḫi*.

استوحّى *ʕistiwaḫḫa* /vt/ to goad vigorously, incite emphatically. -ava *mistiwaḫḫi*.

وحى [3]

وحى *waḫa*[2]: *ʕil-waḫa l-waḫa [magic]* quickly, with top speed (formula used in demanding services from spirits).

وخد see ءخد: *waaxid, waxxid, ʕitwaxxid*

وخرى see ءخر: *waxri*

وخز

وخز *waxaz*↑ *(i)* /vt/ to prick. ‖ *waxz iḍ-ḍamiir* prickings of conscience. -vn *waxz, waxazaan*; ava *waaxiz*; pva *mawxuuz*.

وخزة *waxza* /inst n, pl *-aat*/ a prick.

اتوخز *ʕitwaxaz* /vi/ to be pricked. -iva *mitwixiz*.

وخم

وخم *waxam* /n/ drowsiness, sluggishness. *quum bala waxam* get up, get a move on, wake up!

وخمان *waxmaan* /adj */ drowsy, sluggish.

وخّم *waxxam* /vi/ **1** to become stuffy, become congested (of air). **2** to become slothful (of people). *ʕil-waaḫid waxxam min ʿqillit il-ḫaraka* one is feeling sluggish because of lack of activity. -vn *tawxiim*; ava *miwaxxam*.

ودد

ودّ *wadd (i)* /vt/ to feel affection for. *saaɛit ma ʃuft-u qalb-i wadd-u* I fell for him as soon as I saw him. *ṭuul ɛumr-u w-huwwa bi-ywidd-i-ni* he has felt affection for me all his life. -vn *wadadaan, widd, wudd*; ava *waadid*; pva *mawduud*.

¶ *wadd*[a] *ɛala* to pay a friendly visit on. *ʕibqa widd*[a] *ɛaleena* do call on us sometime.

ودّ *widd* /n/ affection, liking. *kaan fii widd*[i] *benhum* there was affection between them. *yuṭlubu widd-i ɛaʃaan ʕeeh* why should they seek my friendship? ‖ *law il-widd*[i] *widd* ... were it up to ..., as in *law il-widd*[i] *widd-i ma-kan-ʃ*[i] *daxal il-beet* if I had my way, he would not have set foot in the house. -*ka-widd*[i] *waaḫid*↓ on the same level, as in *xalli il-balaṭteen ka-widd*[i] *waaḫid* lay the two tiles level with each other.

¶ *bi-widd-* (also *bidd-*) modal of desire. *bi-widd-i* (or *bidd-i*) *ʕasaafir* I want to travel. *kaan bi-widd-u-hum* (or *kaan bidd-u-hum*) *yiigu laakin ma-laquu-ʃ muwaṣla* they would have liked to come but couldn't find any means of transport. -*ma-bidd*[a]*-haa-ʃ* it's high time to act, as in *saaɛit ma ʃuft il-xanaagir ẓaharit qult*[i] *ma-bidd*[a]*-haa-ʃ* as soon as I saw the daggers coming out I decided there was no time to waste.

ودّى *widdi, wuddi* /adj */ amicable, friendly. *taswiya widdiyya* (1) amicable settlement. (2) *[leg]* out of court settlement.

أودّ *ʕawadd* /el/ more/most desirable. *ʕawadd*[i] *ma ɛala qalb-i ʕinn il-buliiṣ yimsik-ak* there is nothing I want more than that the police catch you.

وداد *widaad* /n/ affection, love.

ودود *waduud* **1** /adj */ affectionate. **2** /n/ Favourably-disposed One (epithet of God).

ودّاد *waddaad* /adj */ sociable. *di kaanit sitt*[i] *waddaada* she was a very sociable woman.

مودّة *mawadda* /n pl *-aat*/ liking, affection.

اتودّ *ʕitwadd* /vi/ passive of *wadd*. -iva *mitwadd*.

اتودّد *ʕitwaddid, ʕitwaddad* /vi/ to show affection. -vn *tawaddud*↑; ava *mitwaddid*.

اتوادّ *ʕitwaadd* /vi/ to exchange social courtesies or expressions of affection. -vn *tawaadd*↑; ava *mitwaadd*.

ودع [1]

ودع *wadaɛ*[1] *(a)* /vt/ to lodge, deposit, place in custody. *mumkin tiwdaɛ filuus-ak wi-taaxud ɛaleeha ʕarbaaḫ* you can deposit your money and earn interest on it. *laazim niwdaɛ-ak fil-ḫagz*[i] *l-bukra* we must place you in custody until tomorrow. *ʕil-maḫkama b-tuḫkum bi-ʕidaaɛ il-walad fil-malgaʕ* the court rules that the boy should be placed in a children's home. -/the literary passive frequently occurs/ *ʕiʃ-ʃihaada btaɛt-ak laazim tuudaɛ fi-qalam it-tasgiil* your certificate has to be deposited in the registry. -vn *wadaɛaan*; ava *waadiɛ*; pva *mawduuɛ*.

وداع *widaaɛ, wadaaɛ* /n/ farewell. *ḫaflit widaaɛ* farewell party. *ṭawaaf il-wadaaɛ [Isl]* last ritual step in the pilgrimage which consists in making farewell circuits of the Kaaba.

وداعة *wadaaɛa* /n/ gentleness, mildness.

وديع *wadiiʕ↑* /adj */ gentle, mild.

وديعة *wadiiʕa* /n pl *wadaayiʕ*/ deposit, thing or sum deposited. ‖ *ʔiṣaal wadiiʕa* a receipt for goods deposited with the customs upon arrival from abroad for subsequent clearance. - *maxzan il-wadiiʕa* the depot where such goods are deposited.

اتودع *ʔitwadaʕ* /vi/ to be lodged, be deposited, placed in custody. - iva *mitwidiʕ*.

ودّع *waddaʕ* **1** /vt/ to bid farewell. *waddaʕt-u ʔabl[i] ma ʔasaafir* I said goodbye to him before he went away. **2** /vi/ *[joc]* to pop off, kick the bucket. - vn *tawdiiʕ*; ava *miwaddaʕ*.

مودّع *miwaddaʕ* /adj/ departing, dying out. *ʔil-xiyaar miwaddaʕ il-yomeen dool* it is the end of the season for cucumbers.

اتودّع *ʔitwaddaʕ* /vi/ to be bidden farewell. - iva *mitwaddaʕ*.

أودع *ʔawdaʕ↑ = wadaʕ[1]*. - vn *ʔidaaʕ*; ava *muudiʕ*; pva *muudaʕ*.

إيداع *ʔidaaʕ* /n pl *-aat*/ deposit. *ʔidaaʕ taʔmiin* security deposit.

مودع *muudiʕ* /n */ depositor.

استودع *ʔistawdaʕ* /vt/ to entrust to. *ʔistawdaʕt-ak il-filuus di l-ɣaayit m-argaʕ mil-ḥagg* I entrust this money to you until I return from the pilgrimage. ‖ *ʔistawdaʕt-ak rabb-i-na* go in God's keeping. - vn *ʔistiwdaaʕ*; ava/pva *mistawdiʕ, mistawdaʕ*.

استيداع *ʔistidaaʕ* /n/ *[mil]* pension. *ʔiṯḥaal ʕal-ʔistidaaʕ* he was retired.

مستودع *mustawdaʕ* /n pl *-aat*/ depot.

و د ع [2]

ودع *wadaʕ[2]* /coll n/ sea-shell(s). ‖ *ḍarb il-wadaʕ* method of fortune-telling by throwing down shells and examining the positions in which they fall.

ودعة *wadaʕa* /unit n, pl *-aat*/ a seashell.

ودعاية *wadaʕaaya = wadaʕa*.

و د ك

ودّك *waddik* /vt/ **1** to season or condition (s.o.), cause (s.o.) to mature. *miʃ ḥa-ywaddik-ak ʔilla fuɣl is-suuq* there's nothing like getting out to work for making you grow up. **2** to fire (pottery) in a kiln. - vn *tawdiik*; ava *miwaddik*.

اتودّك *ʔitwaddik* /vi/ **1** to be or become seasoned or matured. **2** to be fired in a kiln (of pottery). - ava/iva *mitwaddik*.

و د ن

ودن *widn* /fem n, pl *widaan*/ **1** ear. *ḥalamit il-widn* lobe of the ear. *ʔil-ḥeṭaan liiha wdaan* walls have ears. *yiddi l-ḥalaq li-lli bala wdaan [prov]* (He gives earrings to those who have no ears) ≈ the best goes to those least equipped to appreciate it. ‖ *(ʕamal) widn[i] min ṭiin wi-widn[i] min ʕagiin* ≈ (to let things) in one ear and out of the other. - *ʕala widn-u* abundant, as in *kaanit ḥafla kbiira w-kaan iʃ-furb[a] ʕala widn-u* it was a big party with a lot of drinking. - *widn-ak mineen ya guḥa* (Goha, where's your ear?) ≈ why do you make simple matters complicated? - *widn[i] quṭṭa* flat soft piece of bread, shaped like a scoop for dipping in food. - *widn-u ḥilwa* he has a good ear (for music). - *ʔiddii-ni widn-ak* ≈ lend me your ear, give me your attention. - *taxxan widn(-u)* to flatter (s.o.), swell (s.o.) up with (undue) praise. - *widn il-fiil [bot]* elephant's ear (Caladium esculentum). **2** (roughly ear-shaped) handle, lug. *widn[i] fingaan* cup handle. *ʔil-quffa lli laha widneen yiʃiluu-ha tneen [prov]* (the basket with two handles is to be carried by two) ≈ many hands make light work. ¶ *widanaat-ak: ḥalaq dahab fi-wdanaat-ak* a line of a song traditionally sung for *yoom is-subuuʕ*.

ودنة *widna* /n/ **1** name of various wild plants, such as varieties of navelwort, scorpion's tail, plantain, and indigo plant. *ṣabbaara widna* name of various succulent plants, such as Christmas cactus. **2** hangnail.

ودنى *widani* /adj */ fond of listening to gossip.

وديني *wideeni = widani*.

و د و د

ودود *wadwid* /vi/ to tell malicious tales, gossip. *qaʕadu ywadwidu kull is-sahra* they sat gossiping all evening long. - vn *wadwada*; ava *miwadwid*.

¶ *wadwid li-* to goad, incite. *qaʕadu ywadwiduu-lu l-ɣaayit ma ṭallaq miraat-u* they kept on at him until he divorced his wife.

اتودود *ʔitwadwid* /vi/ to exchange confidences, exchange secrets. *qaʕdiin yitwadwidu miṣ-ṣubḥ* they've been whispering secrets to each other for ages. - ava *mitwadwid*.

و د و ز

وادوزيل *wadwaziil, wadwazeel* /n pl *-aat*/ *[slang]* effeminate man, pansy.

و د ى [1]

وادى *waadi* /n pl *widyaan*/ valley, gully, ravine. *waadi n-niil* the Nile valley. *waadi l-muluuk* the Valley of the Kings. *baṭn il-waadi* bed of the ravine. ‖ *huwwa f-waadi wi-nta f-waadi* you and he are not on the same wavelength.

و د ي ²

ودّى *wadda* /vt/ **1** to convey, take. *ʕiṭ-ṭabbaax ḥa-ywaddi iṣ-ṣawaani (ɛala) l-furn* the cook will take the trays to the bakery. *ɋal-li l-ɛaskari taɛaala maɛaaya w-waddaa-ni l-ẓaabiṭ taani* the policeman said, 'Come with me', and took me to another officer. *yiwaddii-k il-baḥr[i] wi-ygiib-ak ɛaṭṭaan* (he takes you to the river and brings you back thirsty) ≈ he can twist you round his little finger. *ʕaadi ṣ-ṣillim illi ḥa-ywaddii-k il-balakoona* there are the stairs that will lead you to the balcony. *ʕiṭ-ṭaariɛ da ywaddi ɛala feen* where does the street lead to? ‖ *ɛaɋl-a-ha ywaddi wi-ygiib* she is anxious and distracted. - *kalaam-ak la ywaddi wala ygiib* what you are saying is pointless. **2** to send. *wadduu-ni maɛa waaḥid tamargi ɛamal-li ḥuɋna* they sent me off with a nurse who gave me an injection. *waddeet ibn-i madrasa fil-xaarig* I sent my son to a school abroad. *ʕil-balad illi twaddi ʕaḥsan min illi tgiib [prov]* (the place that sends people away is better than that which brings them in) ≈ good riddance. ‖ *ʕawaddi wiff-i (minnu) feen* I am very embarrassed (to see him). - *wadda(a) f-dahya* to ruin (s.o.), give (s.o.) a hard time. - vn *tawdiyya*; ava *miwaddi*.

اتودّى *ʕitwadda* /vi/ **1** to be conveyed, be taken. **2** to be sent. - iva *mitwaddi*.

و ر ا see **و ر ى ²**: *wara*

و ر ب

ورب *warab (i)* **1** /vt/ to cut (a woven fabric or paper) on the bias. *laazim tiwrib il-ɋumaaʃ ɛaʃaan ir-rasma tibɋa maẓbuuṭa* you should cut the material on the bias so that the design is right. **2** /vi/ to hang awry (of cloth). - vn *warb*; ava *waarib*; pva *mawruub*.

ورب *warb, warb* /n/ **1** obliqueness, slant. **2a** diagonal. *bil-warb* diagonally. *rakkib il-ḥittiteen bil-warb* fix the two pieces together by the oblique sides. **2b** *[text]* bias. *bil-warb* on the bias.

اتورب *ʕitwarab* /vi/ **1** to be cut on the bias. **2** to hang awry (of cloth). - iva *mitwirib*.

وارب *waarib (i)* /vt/ to cause to be ajar. *waarib il-baab ʃiwayya* open the door just a little bit. - vn *muwarba, miwarba*; ava/pva *miwaarib*.

موارية *muwarbaˆ* /n/ evasiveness. *ʕitkallim min ɤeer muwarba* don't be evasive, speak directly.

اتوارب *ʕitwaarib* /vi/ to be left ajar. - iva *mitwaarib*.

و ر ث see **و ر س**

و ر د ¹

ورد *warad (yiwrid, yaridˆ)* /vi/ **1** to be mentioned, occur. *ʕil-iṣṭilaaḥ da warad fi-kutub kitiira* this expression occurs in many books. **2** to meet (with s.o.), come to the attention (of s.o.). *yaama warad ɛaleena ẓabaayin* how many (different) customers have come to us! ‖ *yaama warad ɛaleena* we've seen them all. - *ḥaaga ma-waradit-ʃ* something unique. **3** to arrive (of correspondence etc.). *ʕil-muẓakkara di waradit bi-tariix tamantaaʃar* this memo arrived on the eighteenth. ‖ *maktab il-wuruud [communic]* telegraph receiving office. - *maktab il-waarid [communic]* the office for incoming mail. - *daftar il-waarid [admin]* the register of incoming mail. - *ʕil-ɋaṭr il-waarid* the incoming train. - *xitm il-waarid [communic]* stamp showing the arrival date of letters etc. - vn *wuruud*; ava *waarid*.

واردات *waaridaat* /pl n/ imports. *ʕil-waaridaat wiṣ-ṣaadiraat* imports and exports.

ورد *wird* /n pl *ʕawraad, wiraad, wuruud*/ **1** land-tax form issued to landowners to show tax instalments paid by them. **2** *[Isl]* schedule of specified prayers and sections of the Koran read during private worship particularly between midnight and dawn.

وريد *wariid* /n pl *ʕawrida*/ vein.

وريدى *wariidi* /adj */ venous, veinal.

مورد *mawridˆ* /n pl *mawaarid*/ **1** source, resource. *mawaarid il-mayya* sources of water. *mawaarid maliyya* financial resources. **2** source of income. *maɛanduhum-ʃ[i] mawrid ɤeer-u* they have no other source of income.

موردة *muráda, murda* /n pl *-aat*/ slope leading down to the water's edge in a canal or the Nile, where villagers wash their clothes and dishes and fill their water-pots (water-carrying being treated by eligible girls as an opportunity for appearing socially - hence the frequent reference to the *muráda* in love songs).

وردّ *warrad[1]* /vt/ **1** to supply. *ʕig-gamɛa bi-twarrad liina k-kutub wid-dafaatir* the university supplies us with the books and notebooks. **2** to dispatch, deliver. *dool dayman bi-ywarradu l-biḍaaɛa fil-waɋt il-maẓbuuṭ* they always deliver the goods on time. - vn *tawriid*; ava *miwarrad, muwarridˆ*; pva *miwarrad, muwarradˆ*.

توريد *tawriid* /n pl *-aat*/ supply. *maktab tawridaat* purchasing department. *ʕamr[i] tawriid [admin]* supply order.

مورّد *muwarrid* /n */ supplier.

اتوردّ *ʕitwarrad* /vi/ **1** to be supplied. **2** to be dispatched, be delivered. - iva *mitwarrad*.

إيراد *ʕiraad* /n pl *-aat*/ **1** revenue, take. *mutawassiṭ ʕiraad ʕayy[i] maḥaṭṭit banziin kibiir* the average revenue of any petrol station is considerable. **2** income. *ɋariibit il-ʕiraad il-ɛamm* income tax.

استورد ʕistawrad /vt/ to import. *maṣr[i] b-tistawrid ɋamḥ[i] min ʕamriika* Egypt imports wheat from America. -/the literary passive imperfect occurs/ *ʕil-makana di b-tustawrad min barra* this machine is imported from abroad. ‖*maktab istiraad wi-taṣdiir* import and export office. -vn *ʕistiraad*; ava *mistawrid, mustawrid↑*; pva *mustawrad*.

و ر د [2]

ورد *ward* /coll n/ **1** flower(s). *ʕil-ward[i] miʃ li-lli ʒaraɛ il-ward[i] li-lli gana [prov]* ≈ the work we do today will profit those who come after us. ‖*ward[a] ɋaleek* how wonderful you are! **2** (also *ward[i] baladi*) rose(s). *l-agl il-ward[i] yitsiɋi l-ɋulleeɋ [prov]* for the sake of roses the creepers are watered. *xaʃab ward* rosewood. *mayyit ward* or *maaʕ ward* or *maward* rose water. *ma-laɋuu-ʃ fil-ward[i] ɋeeb ɋaluu-lu y-aḥmar il-xaddeen [prov]* (they found no flaw in the rose, so they called it rosy-cheeked) ≈ you would find fault with a fat goose! *ʕilli yḥibb il-ward[i] yistaḥmil ʃook-u [prov]* he who loves a rose should bear its thorn.

وردة *warda[1]* /n/ **1** /unit n, pl *-aat*/ **1a** a flower. **1b** a rose. *tidbal il-warda w-riḥit-ha fiiha [prov]* (a rose may fade yet its scent remains) ≈ one's good qualities are not changed by one's lot in life. **2** /pl *wirad*/ *[mech]* metal washer.

ورداية *wardaaya* = *warda[1]*.

وردي *wardi* /adj */ rose-coloured, rose-pink.

وردّ *warrad[2]* /vi/ **1** to blossom. *ʕiz-zarɛ[i] warrad* the plants blossomed. **2** to become rosy-coloured. *xudud-ha mwarrada* her cheeks are rosy. — /vt/ **3** to make rosy in colour. -vn *tawriid*; ava *miwarrad*.

اتورّد *ʕitwarrad* /vi/ to become rosy in colour. *wiʃʃ-a-ha twarrad xaaliṣ baɛd[i] ma xadit vitaminaat* she became healthy-looking after she took vitamins. -ava *mitwarrad*.

و ر د) [3]

وردا *warda[2]* <It *guarda*> /interj/ look out! stand clear!

وردّية *wardiyya* <It *guardia*> /n pl *-aat, waraadi*/ **1** shift, scheduled period of work. **2** group of workmen scheduled to work during a particular shift.

و ر د ل

وردل *wardul* <Gr *bardoulo*> /n/ welt (of a shoe).

و ر د م

وردمان *wardamaan* <It *guardamano*> /n pl *-aat*/ hand-rail (e.g., above the steps of a bus).

و ر ر

وَرّ *warr[1] (i)* /vi/ **1** to whirr, produce a humming or buzzing sound. *ʕit-tilifoon ma-bi-ywirr[i]-ʃ xaaliṣ* the telephone gives no dialling tone. **2** to revolve, move around quickly. *ʕin-naḥla ɋammaala twirr* the top is spinning hard. ‖*ʕil-ʕagaaza miʃ maɋnaa-ha ʕinnak tiwirr[i] fiʃ-ʃawaariɋ ṭuul in-nahaar* being on holiday does not mean that you should run around in the streets all day long. -vn *warr, warr, wararaan*; ava *waarir*.

وَرّ *warr[2], warr* /n/ hum, humming noise. *warr it-tilifoon* dialling tone.

و ر س

ورث *waras, waras, wiris (i)* (also *ʕiris↓, ʕaras↓*) **1** /vt/ **1a** to inherit. *ʕil-beet illi wrist-u ɋan ʕabuu-ya ṭṭarbaq* the house I inherited from my father collapsed. **1b** to be an heir to. *ɋamm-i maat w-ana wrist-u* my uncle died and I am his (sole) heir. **2** /vi/ to come into an inheritance. *lamma tiwris ʕiwɛa tinsa lli ɋaleek* when you come into your inheritance don't forget your debts. *waras fi-* to share in (s.o.'s estate), as in *waras fi-ɋamm-u* he was one of his uncle's heirs. -vn *wirs, wiraasa*; ava *waaris*; pva *mawruus, mawruus*.

ورث *wirs* (also *ʕirs↓*) /n/ legacy, inheritance.

وراثة *wiraasa* /n pl *-aat*/ **1** legacy, inheritance. **2** heredity. *guzʕ[i] kbiir min iz-zakaaʕ bi-ykuun bil-wiraasa* intelligence is largely a matter of heredity.

وراثي *wiraasi* /adj */ hereditary.

وارث *waaris* /n * and pl *warasa*/ heir, inheritor.

وريث *wariis* (also *ʕariis↓*) /n pl *wurasa*/ heir. *huwwa l-wariis il-waḥiid* he is the only heir.

ميراث *miraas* /n pl *mawariis*/ legacy, inheritance. *ɋaɛdiin yitɋasmu l-miraas* they are dividing up the legacy.

تراث *turaas↑* /n/ legacy. *ʕit-turaas il-ʕadabi* the literary heritage.

اتورث *ʕitwaras, ʕitwaras, ʕitwiris* /vi/ to be inherited. *ʕil-beet itwaras ɋan gidd-i* the house was inherited from my grandfather. *ʕitwaras bil-ḥaya* his property was divided up (among his relatives) while he was still alive. -iva *mitwiris*.

ورّث *warris, warras* (also *ʕarras↓*) /vt/ **1** to bequeath to. *ʕabuu warris-u sarwa* his father left him a fortune. ‖*ʕil-ḥaya fir-rigaal yiwarris il-faqr [prov]* timidity in men leads to poverty (an injunction to be more aggressive). **2** to divide up (an inheritance) according to the law amongst the ones who are eligible to share in it. -vn *tawriis*; ava/pva *miwarris*.

¶ *warras fi(i)* to give (s.o.) the right to share in (an

inheritance). *ma-warras-hum-f^{i} fil-beet* he did not leave them a share in the house.

مورّث *miwarris* /n */ testator.

اتورّث *ʔitwarris, ʔitwarras* (also *ʔitʔarris*↓) /vi/ **1** to divide up an inheritance (of inheritors). *saabu r-raagil mayyit ɛala sriir-u w-ɣaamu yitwarrisu fii* they left the dead man on his bed and started dividing his property among themselves. **2** to be divided up (of an inheritance). **3** to be made an heir. - ava/iva *mitwarris*.

أورث *ʔawras*↑ /vt/ to leave (as a result). *ʔil-ħaya bi-yiwris il-faqr* modesty leads to poverty. - iva *miwris*.

اتوارث *ʔitwaaris, ʔitwaaras* (also *ʔitʔaaris*↓) = *ʔitwarris* 1. - ava *mitwaaris*.

توارث *tawaaras*↑ /vt/ to inherit generation after generation. *tawaarasu ṣ-ṣanɛa ʔabban ɛan gidd* they passed the craft down from father to son. - vn *tawaarus*; ava *mutawaaris*; pva *mutawaaras*.

(و ر ش)

ورش *warʃ* /n/ *[rur]* **1** butcher's chopping block. **2** axle rest or bearing at the water exit of an Archimedes' screw (see Pl.E, 16).

ورْشة *warʃa* <prob Engl> /n pl *wiraʃ*/ workshop.

و ر ظ

ورط *waraṭ (i)* /vt/ to cause to be involved in difficulties, get (s.o.) into a predicament. *ʔinta lli waraṭ^{i} nafs-ak min ɤeer luzuum* you've got yourself into trouble unnecessarily. - vn *waraṭaan, warṭa*; ava *waariṭ*; pva *mawruuṭ*.

ورطة *warṭa* /n pl *-aat*/ difficult situation, predicament, fix.

اتورط *ʔitwaraṭ* /vi/ to be or become involved in difficulties. - ava/iva *mitwiriṭ*.

انورط *ʔinwaraṭ* = *ʔitwaraṭ*. -ava/iva *minwiriṭ*.

ورّط *warraṭ* /vt/ to put on the spot, embroil in difficulties. *ʔiṣ-ṣaħafi warraṭ-u fik-kalaam* the journalist talked him into a tight spot. - vn *tawriiṭ*; ava/pva *miwarraṭ, muwarraṭ*.

اتورّط *ʔitwarraṭ* /vi/ to be or become involved in difficulties. - ava/iva *mitwarraṭ*.

و ر ع

ورع *waraɛ* /n/ godliness.

ورِع *wariɛ*↑ /adj */ God-fearing.

اتورّع *ʔitwarraɛ* /vi/ to be reticent or reserved. *ma-yitwarraɛ-f^{i} ɛan ʔakl^{i} maal in-nabi* he would not hesitate to steal (even) the Prophet's money. - ava *mitwarraɛ*.

و ر ق

ورق *waraq* /coll n, pl *ʔawraaq*/ **1** paper. *waraq zibda* greaseproof paper. *waraq laħma* thick cartridge paper. *waraq garaayid* newsprint. *waraq naffaaf* blotting paper. *waraq sanfara* sandpaper. *waraq laff* wrapping paper. *waraq bafra* cigarette paper(s). *tuqqaalit waraq* paperweight. *dabbuus waraq* paper clip. *manadiil waraq* paper handkerchiefs, tissues. *kiis waraq* paper bag. ‖ *ʔil-yomeen dool if-fubbaan waraq* young people are soft these days. - *ɛal-waraq* on paper, in theory, as in *ʔana b-aqbaḍ miit gineeh ɛal-waraq* on paper I get paid a hundred pounds, *ʔil-xiṭṭa kwayyisa ɣawi ɛal-waraq* the plan seems fine in theory. - *ħibr^{a} ɛala waraq* empty (written) words, as in *ʔik-kitaab da kalaam-u kull-u ħibr^{a} ɛala waraq* that book has no substance. **2** document(s), (official) paper(s). *ʔawraaq l-iɛtimaad* credentials. *ʔawraaq maliyya* stock certificates. *waraq-ak miṭɛaṭṭal ʃiwayya* your papers have been held up. *laazim tiqaddim ʔawraaq-ak fil-miɛaad* you should present your papers on time. **3** ticket(s), stamp(s), or other paper(s) of small size. *waraq busṭa* postage stamp(s). *waraq damɤa* (1) fiscal stamp(s). (2) sheet(s) of paper with a fiscal stamp (for applications etc. to government departments). *waraq yanaṣiib* lottery ticket(s). *ʔil-waraq (min faḍl-u-kum)* tickets (please)! **4** playing card(s). *ṭuul in-nahaar maskiin il-waraq fi-ʔdee-hum* they play cards all day long. **5** paper patterns (in dressmaking). *di miʃ bass^{i} faṭra fit-tafṣiil - bi-tiɛraf tiquṣṣ il-waraq kamaan* she's not just good at dressmaking - she even knows how to make paper patterns. **6** foliage, leaves. *maħʃi waraq ɛinab* (dish of) stuffed vine-leaves. ‖ *waraq madɤa* (a quid of) chewing tobacco. **7** petal(s).

ورقة *waraqa* /unit n, pl *-aat*/ **1** a piece of paper, a sheet of paper. *waraqit zibda* a piece of greaseproof paper. *waraqit garaayid* a sheet of newspaper. **2** a document, an official paper. *ʔiddii-ni waraqa ʔadxul biiha l-mustaffa* give me an official note so I can be admitted to the hospital. ‖ *waraqa* (or *waraqit ṭalaaq*) *[Isl]* bill of divorce, as in *goz-ha baɛat laha waraqit-ha* her husband sent her the document registering the divorce, *ʔiddii-ni waraqt-i [women]* divorce me! - *waraqit ʔuktoobar* government policy statement issued after the War of October 1973. **3** a note. *ma-laqet-uu-ʃ fil-beet fa-sibt-i-lu waraqa* I didn't find him at home so I left him a note. **4** a ticket, a stamp, or other paper of small size. *ʔana gibt il-waraqa xalaaṣ* I've already bought the ticket. *waraqa b-ɛafara (gneeh)* a ten-pound note. **5** a playing card. ‖ *ʔit-talat waraqaat* (1) three-card trick, find the

lady. (2) swindling, as in *raagil bitaaʕ it-talat waraqaat* a con man, a swindler. **6a** a (small) packet. *waraqit ʃaay* a (small) packet of tea. **6b** a parcel wrapped in paper. ‖*waraqit laḥma* (1) a piece of cartridge paper. (2) dish of meat, onions, spices and sometimes potatoes, cooked in this paper. **7** a leaf. ‖*mayooh waraqit tuut* a fig-leaf bikini, a very brief bikini. **8** a petal.

ورقى *waraqi* /adj/ of paper, made of paper. *ʕumla waraqiyya* paper currency.

ورّاق *warraaq* /n */ paper supplier, paper dealer.

ورّق *warraq* **1** /vt/ *[rur]* to remove the bottom leaves of (maize) for use as fodder. **2** /vi/ to produce leaves, become leafy. - vn *tawriiq*; ava/pva *miwarraq*.

اتورّق *ʔitwarraq* /vi/ *[rur]* to be removed for use as fodder (of maize leaves). - iva *mitwarraq*.

و ر ك

ورك *wirk* /pl *wiraak, ʔawraak*/ **1** thigh (of a rabbit or fowl). **2** *[coarse]* human thigh.

ورّك *warrak, warrak* /vi/ *[coarse]* to become thick-thighed. - vn *tawriik*; ava *miwarrak*.

اورك *ʔiwrik: ʔiwrik-ni wi-ṣdir nafs-ak [prov]* give me the leg and you take the breast ≈ nobody is expected to promote others above his own head.

و ر م

ورم *wirim (a)* /vi/ to swell, swell up. *laqeet liwaz-i wirmit qadd il-beeḍa* I found my tonsils had swollen to the size of eggs. - vn *waramaan, waram*; ava *waarim*.

ورم *waram* /n pl *ʔawraam*/ swelling, lump. *waram xabiis* malignant tumour.

أورم *ʔawram* /el/ more/most swollen.

ورّم *warram* **1** /vt/ to cause to swell. *ʕandi rumatizm[i] fil-mafaaṣil wi-saʕaat bi-ywarram-ha* I have rheumatism in my joints and sometimes it makes them swell. ‖*warram dimaaɣ(-u)* to give (s.o.) a headache. *warram buyuuḍ(-u) [coarse]* to annoy or disgust (s.o.), give (s.o.) a balls-ache. **2** /vi/ to swell up. *riglay-ya fiṣ-ṣeef bi-twarram* in the summer my feet swell. - vn *tawriim*; ava/pva *miwarram*.

مورّم *miwarram* /adj */ *[abus]* sulky.

اتورّم *ʔitwarram* /vi/ **1** to swell up. **2** *[abus]* to become annoyed. *ʔitwarram minni ʕal-ʔaaxir* he was ready to burst with anger at me. - ava *mitwarram*.

و ر ن ش

ورنيش *warniiʃ* <It *vernice*> /n/ **1** varnish. **2** wax polish. **3** shoe polish. *ʔiḍrab ig-gazma warniiʃ* have the shoes polished!

ورنش *warniʃ, warnaʃ (i)* /vt/ to polish, wax. *xud ig-gazma warniʃ-ha* take the shoes and have them polished. - vn *warnaʃa*; ava/pva *miwarniʃ*.

اتورنش *ʔitwarniʃ, ʔitwarnaʃ* /vi/ to be polished, be waxed. - iva *mitwarniʃ*.

و ر و ر

وروور *wirwir* <Copt> /adj invar/ **1** crisp and young (vegetable vendor's cry). *ʔil-figl il-wirwir* fresh radishes! **2** green, inexperienced (of people). *ʔinta lissa wirwir* you are still inexperienced. *ʔil-bint[i] di wirwir* this girl is young and naive.

وروور *warwir (i)* /vi/ **1** to become crisp, sappy and flourishing (of plants). *ʔil-xaṣṣ[i] warwir* the lettuces have become crisp. **2** to become fresh and healthy-looking (of people and especially girls). *ʔil-bint[i] warwirit baʕd[i] ma ṣayyifit fi-swisra* the girl glowed with health after she spent the summer in Switzerland. - vn *warwara*; ava *miwarwir*.

وروورة *wirwira* /n pl *waraawir*/ **1** young chicken. **2** *[slang]* girl. — *waraawir* /pl n/ **3** fresh produce! (vegetable vendor's cry). *figl il-waraawiṛ* fresh radishes!

و ر ي [1]

ورّى *warra (yiwarri, yiwri)* /vt/ to show. *ḫa-nwarrii-ku ṣuwar gawaz-na* we'll show you our wedding pictures. *warreet-u ʔinni mistaɣrab min ṭalab-u* I let him see that I was astonished at his request. ‖*rabb-i-na ma-ywarrii-k* or *ʔallaah la yiwrii-k* ≈ may you never see such a thing! (said when mentioning some misfortune). - *warrii-ni ʕarḍ[i] ktaaf-ak* ≈ beat it! - *warraa n-nuguum fi-ʕizz iḍ-ḍuhr* ≈ he gave him a hell of a time. - *w-allaahi l-awarrii-k* by God I'll show you! - vn *tawriyya*; ava *miwarri*.

اتورّى *ʔitwarra* /vi/ to be shown. - iva *mitwarri*.

و ر ي [2]

وراء *wara* /prep, w pron suff *waraa-*, 1st sing *waraaya*/ **1** behind. *ʔil-quṭṭa wara d-dulaab* the cat is behind the cupboard. *wiqift astarayyaḫ baṣṣeet laqeet iṭ-ṭabuur da wiqif waraaya* I stopped to rest, looked round and saw this line of people had stopped behind me. ‖*waraaya fuxl* I have work to do. - *waraana naas* we have people to consider. - *min wara minni* or *min waraaya* without my knowledge. - *la waraa wala quddaamu* he has nothing. - *ṣarafu ʔilli waraahum wi-lli quddamhum* they spent all they had. **2** after, following. *ʔagib-lak ʕaṣafiir ʔizzaay - ʔaṭiir waraahum fis-sama*

how am I supposed to get sparrows for you? should I fly after them in the sky? *maṭraḥ ma truuḥ (ʕana) waraak* wherever you go I'll follow. *ʕig-garas ḍarab marriteen wara baɛḍ* the bell rang twice in succession. *ʕir-ruṣaaṣ gayy^{i} wara baɛḍ-u* the bullets are coming thick and fast.

ورّانى *warraani* /adj */ rear, back, at the back. *ʕil-baab il-warraani* the back door.

تورية *tawriya↑* /n pl *-aat/ [lit]* allusion.

وارى *waara↑* /vt/ to obscure, veil. *waarit wiff-a-ha* she hid her face. *lizum-ha ʕeeh il-miwariyya* what is the need for dissimulation? *ḥibb^{i} w-waari wi-krah wi-daari [prov]* ≈ show your love discreetly, but hide your hate completely. - vn *miwariyya*; ava/pva *miwaari*.

اتوارى *ʕitwaara↑* /vi/ to hide oneself. - ava *mitwaari*.

و ز ر^{1}

وزر *wizr* /n pl *ʕawzaar/* **1** sin. **2** fault.

وزارة *wizaara, wazaara* /n pl *-aat/* (governmental) ministry.

وزارى *wizaari* /adj/ ministerial.

وزير *waziir* /n pl *wuzara/* **1** government minister. ‖ *liɛbit il-waziir* any of several children's games in which one child is chosen to decide rewards and punishments. *baab il-waziir* quarter of Cairo north of the Citadel. **2** queen (in chess).

استوزر *ʕistawzar↓* /vi/ to become a government minister. *ʕilaah-i tistawzar wi-tibqa raagil ɛaẓiim* may you become a minister and an important man. - ava *mistawzar*.

و ز ر^{2}

وزرة *wazara* /n pl *-aat, wuzar/* **1** any structural device, such as a baseboard, which goes around a room. **2** lintel.

و ز ز^{1}

وزّ *wazz (i)* /vt/ **1** to tempt. *ʕif-fiṭaan wazz-i-ni ɛala f-furb* Satan tempted me to drink. **2** to incite. *wazzu l-mudiir ɛalayya* they set the director against me. - vn *wazz, wazazaan*; ava *waaziz*; pva *mawzuuz*.

وزّة *wazza* /pl *-aat/* instance noun of *wazz. ɋabl^{i} ma saafir gat wazza ɛalee* somebody reported on him before he left the country.

وزّاز *wazzaaz* /adj */ factious, contentious, seditious.

اتوزّ *ʕitwazz* /vi/ **1** to be tempted. **2** to be incited. - iva *mitwazz*.

انوزّ *ʕinwazz* = *ʕitwazz*. - iva *minwazz*.

و ز ز^{2}

وزّ، إوزّ *wizz* /coll n/ goose, geese. *ʕibn il-wizz^{a} ɛawwaam [prov]* ≈ he's a chip off the old block. ‖ *wizz^{i} ɛraaɋi* swans. - *ʕil-ɛizz^{i} w-ʕakl il-wizz* ≈ a life of luxury, as in *dool mitrabbiyiin fil-ɛizz^{i} w-ʕakl il-wizz* they were brought up in the lap of luxury. - *hizz^{i} ya-wizz* ≈ shake it baby! (phrase used to girls in the street). - *ʕilli takl-u wizz^{i} wizz^{i} yiṭlaɛ ɛala ɛnee-k baṭṭ^{i} baṭṭ [prov]* ≈ you will always pay for your deeds. - *zayy il-wizz^{i} ḥinniyya bila bizz [prov]* (like a mother goose who loves her goslings yet does not breast-feed them) ≈ you say you love but do nothing to prove it.

وزّة، إوزّة *wizza* /n pl *-aat/* **1** /unit n/ a goose. **2** plump girl.

و ز ع

وزّع *wazzaɛ* /vt/ **1** to distribute. *min faḍl-ak wazzaɛ il-manfuraat di ɛala l-muwaẓẓafiin* please distribute these circulars to the employees. ‖ *looḥit tawziiɛ [elec]* circuit board. **2** to pass on, farm out. *raʕiis il-ʕidaara wazzaɛ il-ɋaḍiyya ɛala muḥaami kwayyis* the administrative head dealt the case out to a good lawyer. **3** to get rid of, send away. *liziɋ-li w-ma-ɛrift^{i}-ʃ ʕawazzaɛ-u* he stuck to me and I couldn't give him the brush-off. **4** *[mus]* to arrange. - vn *tawziiɛ*; ava/pva *miwazzaɛ*.

توزيعة *tawziiɛa* /inst n, pl *-aat/* a way to get rid of someone. *ʕafuf-lu tawziiɛa* I'll find a way to get rid of him.

موزّع *muwazziɛ* /n */ **1** distributor. *muwazziɛ il-bariid* postman. *muwazziɛ il-ʕarzaaɋ* (or *il-ḥuẓuuẓ*) God, the distributor of fortune. **2** *[mus]* arranger, orchestrator.

موزّعاتى *miwazzaɛaati* /n pl *-yya/* one expert in passing his work on to others, shirker. *muwaẓẓafiin il-ḥukuuma mwazzaɛatiyya daraga ʕuula* government employees are first-class shirkers.

اتوزّع *ʕitwazzaɛ* /vi/ passive of *wazzaɛ*. - iva *mitwazzaɛ*.

و ز ن

وزن *wazan (i)* /vt/ **1** to weigh, determine the weight of. *ʕiwzin if-fiwaal tilaɋii naaɋiṣ talaata kiilu* weigh the sack and you'll find it three kilos short. ‖ *ʕil-mudiir lil-ʕasaf ma-b-yiwzin-ʃ il-ʕumuur mazbuuṭ* unfortunately the director doesn't have good judgement. **2** to balance, make even or level. *ʕil-bayyaaɛ il-ʕamiin bi-yiwzin kaffiteen il-mizaan ɋabl^{i} ma yistaɛmil-u* an honest vendor balances his scales properly before using them. ‖ *ʕiwzin il-mutoor* tune up the engine! - *bi-yiwzin rigl-u ɛala l-binziin* he has an even touch on the accelerator. - *firib kaseen ɛaʃaan yiwzin dimaaɣ-u* he had a couple of drinks to clear his head. - *ʕil-badla mawzuuna ɛalee* the

suit fits him well. — /vi/ **3** to equal or amount to (s.th.) in weight. *ʔis-sanduuq yiwzin xamastaafar kiilu* the crate weighs fifteen kilos. ‖*ʕaql-i yiwzin ʕafara min illi zayy ir-raagil da* I'm ten times smarter than the likes of that man. **4** to weigh much, be heavy. *ʔif-feela di tiwzin* this load is weighty. - vn *wazn*; ava *waazin*; pva *mawzuun*.

وزن *wazn* /n pl *ʔawzaan*/ **1** weight. *ʔasʕaar id-dibal bi-tibqa ḥasab wazn id-dahab illi fiiha* the prices of plain rings depend on the weight of gold in them. *ʔinʕidaam il-wazn* weightlessness. ‖*ʔil-wazn in-nawʕi* specific gravity. - *raagil ma-luu-f wazn* a man of no consequence. **2** *[mus]* time signature. **3** *[poet]* metre. **4** *[gram]* Arabic morphological pattern. *wazn il-fiʕl* verb pattern.

وزنة *wazna* /n/ **1** /pl *-aat*/ an item or load which is weighed. *wazniteen kull[i] waḥda xamsa kiilu* two weighed loads of five kilograms each. **2** /no pl/ balance, equilibrium. *ʔid-dulaab lii wazna law ixtallit yuqaʕ* a wardrobe is balanced (upright), and will fall if its equilibrium is disturbed. ‖*waznit mutoor* engine tune-up.

أوزن *ʔawzan* /el/ more/most level-headed.

وزّان *wazzaan* /n */ professional weigher.

ميزان *mizaan* /n pl *mawaziin*/ **1** balance, weighing scales. *mizaan ḥassaas* precision balance. *mizaan qabbaani* steelyard. *ʕandi mzaan ṣuṛayyar ʕaʃaan ʔawzin qiṭaʕ il-ḥaʃiif* I have a small scale for weighing the pieces of hashish. *ʔil-biḍaaʕa titbaaʕ bil-mizaan* the merchandise is sold by weight. ‖*mizaan ṭabliyya* weigh-bridge. - *ʔiid-u mzaan* he has a precise hand. - *ʔitkallim bi-mzaan* to weigh one's words. - *mizaan il-madfuʕaat [finan]* balance of payments. **2** meter, gauge. *mizaan ḥaraara* thermometer. *mizaan iḍ-ḍooʔ* light-meter. *mizaan xeeṭ* plumb-line. *mizaan mayya* spirit level. **3** *[mus]* time signature. **4** *ʔil-mizaan [astrol]* Libra. **5** *[dent]* articulator.

ميزانيّة *mizaniyya* /n pl *-aat*/ **1a** budget. *mizaniyyit il-beet* the household budget. **1b** quota, amount (of s.th.) as a budget item. *mizaniyyit id-dukkaan min is-sukkar ʔitneen ṭinn* the shop's sugar quota is two tons. **2** level. *ʔil-ḥallaaq bi-ysaawi ʃaʕr-u mizaniyya waḥda* the barber cuts his hair all one length.

اتوزن *ʔitwazan* /vi/ **1** to be weighed. **2** to balance or be balanced, be made level or even. - iva *mitwizin*.

انوزن *ʔinwazan* = *ʔitwazan*. - iva *minwizin*.

وازن *waazin* **1** /vi/ to make a comparison, note similarities and differences. *ʔana b-awaazin been iʃ-ʃaqqiteen dool* I am comparing between these two flats. **2** /vt/ **2a** to equal, have similar standing. *fi-naẓar-i l-ʕarabiyyiteen yiwaznu baʕḍ* in my opinion the two cars are alike. **2b** to balance. *waazin nafs-ak ʕal-ḥabl* balance on the rope! - vn *miwazna*; ava *miwaazin*.

اتوازن *ʔitwaazin* /vi/ passive of *waazin*. - iva *mitwaazin*.

توازن *tawaazun* /n/ equilibrium, balance. *ʔiḥfaẓ tawazn-ak* (1) keep your balance! (2) keep a level head!

اتّزن *ʔittazan* /vi/ to be well-balanced. *raagil muttazin* a level-headed man. - vn *ʔittizaan*; ava *mittizin, muttazin*.

و ز ى

وازى *waaza (i)* /vt/ **1** to be parallel with. *ʃaariʕ ramsiis yiwaazi ʃaariʕ silimaan baaʃa* Ramses Street runs parallel with Suleyman Pasha Street. *ʔiṣ-ṣoot laazim yiwaazi ṣ-ṣuura* the sound must match the picture. **2** to be commensurate with. *ʔil-ʔugra ma-twazii-ʃ it-taʕab* the pay is not commensurate with the effort. - vn *miwaziyya, muwazaah[t]*; ava/pva *miwaazi*.

اتوازى *ʔitwaaza* /vi/ passive of *waaza*. - iva *mitwaazi, mutawaazi*.

متوازى *mutawaazi* /adj/ parallel. *mutawaazi l-ʔaḍlaaʕ* a parallelogram.

متوازيين *mutawaziyeen* /dual n/ *[gym]* parallel bars.

و س ب

وثب *wasb[t]* /n/ *[athl]* jumping. *ʔil-wasb il-ʕaali* high-jump. *ʔil-wasb[i] biz-zaana* pole vault. *ʔil-wasb iṭ-ṭawiil* long jump.

وثّاب *wassaab* /adj */ lively, enterprising. *rooḥ wassaaba* a dynamic nature.

و س خ

وسخ *wasax* /n/ **1** /pl *ʔawsaax*/ dirt, filth. ‖*wasax il-widaan* ear wax, cerumen. - *naas zayy[i] wasax il-widaan* unpleasant people. **2** /no pl/ excrement, faeces.

وسخ *wisix* /adj * and pl *ʔawsaax*/ dirty, filthy. ‖*ʔibn il-wisxa* son of a whore.

وسخان *wasaxaan* /vn/ soiling, dirtying.

أوسخ *ʔawsax* /el/ dirtier/dirtiest.

وساخة *wasaaxa* = *wasax*.

وسّخ *wassax* **1** /vt/ to dirty, soil. *ʔil-bint[i] wassaxit hudum-ha biʃ-ʃukulaata* the girl has made her clothes all dirty with the chocolate. ‖*ʕaayiz tiwassax ism-i* are you trying to blacken my name? **2** /vi/ to behave immorally, sink low (morally). *ʔil-bint[i] di wassaxit qawi* that girl has become very immodest. *wassax qawi fil-kalaam* he used foul language. - vn *tawsiix*; ava/pva *miwassax*.

اتوسّخ *ʔitwassax* /vi/ **1** to become dirty, become soiled. *timʃi xaṭwiteen fil-balad di wig-gazma titwassax* you go

two steps in this city and your shoes are dirty. **2** to be soiled. - ava/iva *mitwassax*.

اتّسخ *ʔittasax↑* /vi/ to become dirty, become soiled. *ʔil-yaaqa ttasaxit* the collar has become dirty. - vn *ʔittisaax*; ava *mittisix*.

استوسخ *ʔistawsax* /vt/ **1** to consider (too) dirty. *ʔistawsax il-ʔooḍa ḳaam baat barra* he thought the room dirty and so he slept outside. **2** to select for dirtiness. - vn *ʔistiwsaax*; ava *mistawsax*.

و س ط

واسطة *wasṭa* /n pl *wasaayiṭ*/ **1** one who deploys influence on another's behalf. *gab-lu wasṭa* he found him an intermediary. *wasṭit xeer* a conciliator, an influence for good. **2** recommendation, influence for obtaining advantage. *ʔitwaẓẓaf bi-wasṭa* he got a job by pulling strings.

¶ *bi-wasṭit* /prep/ by means of. *bi-niktišif il-guzʔ il-maksuur bi-wasṭit ʔaghizit il-ḳiyaas* we discover the broken part by using meters.

وسط *wisṭ, wusṭ* /n/ **1** waist. *ḥaṭṭ[i] ʔiid-u f-wisṭ-u* he placed his hand on his hip. ‖*timuut ir-raḳḳaaṣa w-wisṭ-a-ha bi-yilɛab* (a belly-dancer's waist goes on wiggling even when she's dying) ≈ one's habits stay with one forever. - *wisṭ-i txalaɛ mil-waḳfa* ≈ I'm about to collapse from standing for so long. **2** /w pron suff also *wisṭii-, wusṭii-*/ middle, centre. heart, midst. *wisṭ iṭ-ṭarabeeza* the middle of the table. *wisṭ il-balad* the city centre. *ḳuṣṣ il-xeeṭ fil-wisṭ* cut the thread in the middle. *fi-wisṭii-na* in our midst. ‖ *(fi-) wisṭ in-naas* in public, for everyone to see. - *wisṭ id-daar [rur]* central courtyard of a house.

وسطاني *wisṭaani, wusṭaani* /adj */ middle, central. see further under و س ط ن

وسطانيّة *wusṭaniyya* /n/ *[naut]* stern-post.

وسط *wasaṭ* **1** /adj/ medium, average, middle. *xayru l-ʔumuur il-wasaṭ* compromise is best. *xafiif wasaṭ [athl]* welterweight. — /n pl *ʔawsaaṭ*/ **2** agent, medium, instrument. **3** milieu. *ʔil-wasaṭ il-fanni* the artistic milieu. **4** average, middle. *min ʔawsaaṭ in-naas* from the common people.

أوسط *ʔawsaṭ↑* /adj, fem *wusṭa*/ middle, central. *ʔiṣ-ṣarq il-ʔawsaṭ* the Middle East. *ʔil-quruun il-wusṭa* the Middle Ages.

وساطة *wasaaṭa, wisaaṭa* /n pl *-aat*/ mediation, intervention.

وسيط *wasiiṭ* /n pl *wusaṭa*/ **1** medium (in spiritualism). **2** vehicle, medium. *laazim yikuun wasiiṭ fi-naḳl il-loon ʔila l-ḳumaaṣ* there must be a medium for transferring the colour to the cloth. ‖*ɛaamil wasiiṭ* catalyst. — /adj/ **3↑** middle. *ʔil-ɛaṣr il-wasiiṭ* the Middle Ages.

أواسط *ʔawaasiṭ↑* /pl n/ (roughly) central part. *ḥa-yiwṣal fi-ʔawaasiṭ il-ʔusbuuɛ* he will arrive sometime around the middle of the week. *raagil min il-ʔawaasiṭ* an average man. *ʔawaasiṭ ʔurubba* Central Europe.

وسّط *wassaṭ* /vt/ **1** to use (s.o.) as an intermediary or a go-between. *ʔana m-aḥibb[i]-ʃ ḥadd[i] ywassaṭ-ni f-masaaʔil gawaaz* I don't like anyone to ask me to mediate in things to do with marriage. **2** to position or situate in the middle. *wassaṭ il-ḥizaam fiwayya* bring the belt more to the middle. - vn *tawsiiṭ*; ava/pva *miwassaṭ*.

اتوسّط *ʔitwassaṭ* /vi/ **1** to act as an intermediary or go-between. **2** to position or situate oneself in the middle. **3** to be placed or positioned in the middle. - ava/iva *mitwassaṭ*.

متوسّط *mutawassiṭ* /adj */ **1** medium, middle, intermediate. *ʔil-mooga l-mutawassiṭa [broadc]* medium wave. *ʔil-marḥala l-mutawassiṭa [educ]* intermediate school level. *muʔahhalaat* (or *ʃihadaat*) *mutawassiṭa* intermediate (secondary school level) certificates. ‖ *ʔil-baḥr il-ʔabyaḍ il-mutawassiṭ* the Mediterranean Sea. **2** average. *mutawassiṭ iṭ-ṭuul* of average height. *fil-mutawassiṭ* on the average.

اتواسط *ʔitwaasiṭ, ʔitwaasaṭ* /vi/ to act as mediator or go-between. - ava *mitwaasiṭ*.

استوسط *ʔistawsaṭ* **1** /vt/ to select or make towards the middle. *ʔistawsaṭ wi-ʃiil* remove those that are in the middle. **2↓** /vi/ to act as a go-between. - ava *mistawsaṭ*.

و س ط ن see also و س ط

وسطن *wasṭan* /vt/ **1** to make average. *wasṭan il-fustaan* make the dress medium-fitting. *sitt[i] mwasṭana* a woman with an average build. *wasṭan il-ḥikaaya ʃwayya* ≈ let's compromise on the price. **2** to place in the middle. *wasṭan il-beet wasṭana mazbuuṭa fig-gineena* he built the house right in the middle of the garden. - vn *wasṭana*; ava/pva *miwasṭan*.

اتوسطن *ʔitwasṭan* /vi/ to place oneself or be placed in the middle. - ava/iva *mitwasṭan*.

و س ع

وسع *wisiɛ (a)* /vi/ to become wide. - vn *wisɛ, wasaɛaan*; ava *waasiɛ*.

يساع، يسع *yisaaɛ, yisaɛ, yasaɛ↑* /vt imperf/ to be spacious enough to accommodate, have capacity for. *ʔil-ʔistaad bi-yasaɛ ḥawaali miit ʔalf* the stadium holds about a hundred thousand.

وسع *wisɛ* /n/ spaciousness, wideness. *ʔil-fustaan fii*

wisɛ the dress can be let out. ‖*fi wisɛ-* in the power of, as in *ʕuʃlub wi-lli f-wisɛ-i ʕaɛmil-u* state what you want and I'll do what I can, *ʕiɛmil kull illi f-wisɛ-ak* do your best.

وسعة *wisɛa* /n/ **1** abundance, wealth. ‖*min wisɛa* with plenty to spare, as in *ʕil-filuus kaffit.* - *min wisɛa* 'Was there enough money?' 'More than enough.' *wi-wṣiltu fil-maɛaad.* - *min wisɛa* 'Did you arrive in time?' 'With time to spare.' **2** magnanimity. *ma-ɛanduu-ʃ wisɛa* he is petty-minded.

واسع *waasiɛ* /adj/ spacious, wide. ‖*ḥaṣiirit il-ʕahl[i] wasɛa* ≈ there's always room for more at a friend's or relative's house. - *sidr-u waasiɛ* he is patient. - *baṭn-u wasɛa* he is a swindler. - *muxx-u waasiɛ* he is broad-minded. - *zimmit-u wasɛa* he is unscrupulous. - *ɛala l-waasiɛ* on a large scale.

موسوعة *mawsuuɛa* /n pl *-aat*/ encyclopaedia. ‖*raagil mawsuuɛa* a very knowledgeable man.

سعة *siɛa* /n/ capacity. *ʕil-ɡizaaza di siɛat-ha litr[i] waaḥid* this bottle holds one litre.

وسعة *wasaɛa* /n pl *-aat*/ space, elbow room. *yalla niṭlaɛ barra fil-wasaɛa* let's go outside where there's room to breathe.

وسعاية *wasaɛaayà* /n pl *-aat*/ a capacious area. *ʕistanna fil-wasaɛaaya ɛandak* stay where you've got space. ‖*wasaɛaayit ɛabdiin* Abdin Square.

أوسع *ʕawsaɛ* /el/ **1** wider/widest. **2** roomier/roomiest.

وسّع *wassaɛ* **1** /vt/ to widen. *bi-ywassaɛu f-faariɛ ɡuddaam beet-i* they are widening the road in front of my house. *wassaɛ ʕamlaak-u* he increased his property holdings. ‖*wassaɛ madark-ak* broaden your mind. - *wassaɛ is-sikka* get out of the way! **2** /vi/ to make room. *ma-twassaɛu-lha fwayya* why don't you make a little room for her? ‖*ɡult[i] ya-lli f-wiff-i wassaɛuu-li* ≈ I took to my heels. - vn *tawsiiɛ*; ava/pva *miwassaɛ*.

¶ *wassaɛ ɛala* to cause to prosper. *rabb-i-na ywassaɛ ɛaleek* God grant you good fortune! *ʕil-waaḥid laazim yiwassaɛ ɛal-ɛiyaal fil-ɛiid* one should give the kids a good time (with food and presents) on the feast.

توسيعة *tawsiiɛa* /pl *-aat*/ instance noun of *tawsiiɛ*.

اتوسّع *ʕitwassaɛ* /vi/ to be widened. - iva *mitwassaɛ*.

توسّع *tawassuɛ*↑ /n pl *-aat*/ expansion, widening. *ḥaṣal tawassuɛ fi-ʕaɛmaal if-firka* there was an increase in the company's activities.

اتّسع *ʕittasaɛ* /vi/ **1** to widen, become wide. *kaan fii xlaaf basiiṭ ittasaɛ min ɣeer ma ḥadd[i] yuqṣud* there was a simple disagreement which spread through no one's intention. **2** to have capacity. *ʕil-ʕooda di b-tittisiɛ li-xamsiin nafar* this room holds fifty people. - vn *ʕittisaaɛ*; ava *mittisiɛ, muttasiɛ*.

استوسع *ʕistawsaɛ* /vt/ **1** to consider (too) wide. *ʕistawsaɛ il-badla w-raggaɛ-ha lit-tarzi* he thought the suit too loose and returned it to the tailor. **2** to select for width. *ʕistawsaɛ kursi w-ɡaɛad fii* he chose a wide chair and sat in it. - vn *ʕistiwsaaɛ*; ava *mistawsaɛ*.

و س ق [1]

وسق *wasaq[1] (i)* /vt/ to load. *wasaq il-ḥumaar* he loaded the donkey. *markib mawsuuq-a* a loaded boat. - vn *waasiq*; pva *mawsuuq*.

و س ق [2]

وثق *wasaq[2], wasiq*↑ *(yiwsiq, yasiq*↑*)* /vi/ to have confidence, trust. *siq tamaaman ʕinni b-aḥibb-ak* (you can) be very sure that I love you. - vn *siqa, siqa*↑; ava *waasiq*; pva *mawsuuq*.

ثقة *siqa, siqa*↑ /n/ trust, confidence. *ɛadam is-siqa* mistrust, lack of confidence.

وثيق *wasiiq, wasiiq*↑ /adj */ firm, strong. *ṣadaaqa wasiiqa* strong friendship.

وثيقة *wasiiqa*↑, *wasiiqa* /n pl *wasaaʕiq*↑, *wasaayiq*/ document, evidence.

أوثق *ʕawsaq, ʕawsaq* /el/ **1** more/most trustworthy. **2** firmer/firmest.

ميثاق *misaaq*↑, *misaaq* /n pl *mawasiiq*↑/ agreement, charter. *ʕil-misaaq (il-waṭani)* Egypt's National Charter.

اتوثق *ʕitwasaq* /vi/ (impersonal) passive of *wasaq[2]*. *da raagil ma-yitwasaq-ʃ[i] fii* that man is not to be trusted. - iva *mitwisiq*.

وثّق *wassaq, wassaq*↑ /vt/ **1** to attest, authenticate. *ʕil-mubayɛa b-duun tawsiiq ma-tinfaɛ-ʃ* an unauthenticated bill of sale is worthless. **2** to strengthen. *balaaʃ tiwassaq ṣilat-ak big-gadaɛ da* don't deepen your relationship with that guy. - vn *tawsiiq, tawsiiq*; ava *miwassaq, muwassiq*↑; pva *miwassaq, muwassaq*.

موثّق *muwassiq* /n */ notary public.

اتوثّق *ʕitwassaq, ʕitwassaq*↑ /vi/ **1** to be attested, be authenticated. **2** to be strengthened. - iva *mitwassaq, mitwassaq*↑.

استوثق *ʕistawsaq, ʕistawsaq* /vt/ to make certain of, verify. *ruuḥ istawsaq il-xabar minnu ʃaxṣiyyan* go and verify the information from him personally. - vn *ʕistiwsaaq*; ava *mistawsiq*.

و س ك ى

ويسكى *wiski* <Engl> /n/ whisky.

و س ل

وسيلة *wasiila* /n pl *wasaayil, wasaaʕil*/ means, way.

bi-kull il-wasaayil il-mumkina by all possible means. *ʕil-ɣaaya tubarrir il-wasiila* the end justifies the means. *wasaaʕil il-muwaṣlaat* means of transportation. *wasaaʕil il-ʕiḍaaḥ* explanatory aids.

اتوسّل *ʕitwassil, ʕitwassal* /vi/ to plead, make an entreaty. *b-atwassal ʕileek tisamiḥ-ha* I beg you to forgive her. - ava *mitwassil*.

توسّل *tawassal*↑ /vi/ to beg, make a plea. - vn *tawassul*; ava *mutawassil*.

توسّلات *tawassulaat* /pl n/ *[Isl]* songs of supplication to God sung by the muezzin prior to the dawn prayer and by professionals at the celebrations of saints' birthdays.

و س م

وسام *wisaam* /n pl *ʕawsima*/ medal. *wisaam il-gumhuriyya min id-daraga t-talta* Order of the Republic, Third Class.

وسامة *wasaama* /n/ beauty, good looks. *fiiha wasaama* she's good-looking.

وسيم *wasiim* /adj */ handsome, good-looking. *fakl-u wasiim* he is good-looking.

أوسم *ʕawsam* /el/ more/most handsome.

موسم *muusim, mawsim* /n pl *mawaasim*/ 1 season. *da muusim il-burtuqaan* this is the season for oranges. 2 (public) occasion (usually religious). *ʕil-ʕaɛyaad wil-mawaasim* feasts and festivals. *muusim sabɛa w-ɛifriin ragab* the feast of the twenty-seventh of (the month of) Ragab.

موسمى *muusimi, mawsimi*↑ /adj */ seasonal. *ɛamal muusimi* seasonal work. *ʕir-riyaaḥ il-muusimiyya* the monsoon winds.

اتوسّم *ʕitwassim, ʕitwassam* /vt/ to sense or detect (a feeling). *ʕitwassamt*[i] *fiik ir-rayba fil-musaɛda* I sensed that you wanted to help. *laqeet raagil fiʃ-ʃaariɛ itwassamt*[i] *fii l-xeer xalleet iʃ-ʃanṭa ɛandu* in the street I found a man I felt to be honest and left the bag with him. - ava *mitwassim*.

و س ن

وثن *wasan* /n pl *ʕawsaan*/ idol. *ʕil-ɛarab qabl in-nabi kaanu b-yiɛbudu l-ʕawsaan* before the Prophet the Arabs used to worship idols.

وثني *wasani* /adj */ pagan, idolatrous.

وثنيّة *wasaniyya* /n/ paganism, idolatry.

و س و س [1]

وسوس *waswis*[1] /vi/ to bud, form buds (of cotton). *ʕil-quṭn ibtada ywaswis* the cotton began to bud. - vn *waswasa*; ava *miwaswis*.

وسواس *wiswaas*[1] /coll n/ cotton bud(s).

و س و س [2]

وسوس *waswis*[2] /vi/ to instil evil, awaken doubt. - vn *waswasa*; ava *miwaswis*.

وسوسة *waswasa* /n/ wariness, suspicion, the state of being obsessive.

موسوس *miwaswis* /adj */ obsessed, finicky.

وسواس *wiswaas*[2] /n/ 1 /pl *wasaawis, wasawiis*/ obsessive suspicion. 2 *ʕil-wiswaas* the Tempter, Satan.

اتوسوس *ʕitwaswis* /vi/ 1 to become obsessive, become suspicious, become doubtful. 2 (impersonal) passive of *waswis*[2]. *ʕitwaswis-lu* bad ideas were put into his head. - ava *mitwaswis*.

و س ى [1]

وسيّة *wisiyya* /n pl *wasaaya*/ 1 *[obsol]* large estate (particularly one belonging to members of the royal family). 2 place in which graft and embezzlement are indulged in unchecked. *ʕif-ʃirka baqit wisiyya* the company has become something free for the taking.

و س ى [2]

واسى *waasa* /vt/ to comfort, console. - vn *muwasaah*; ava *miwaasi, muwaasi*.

اتواسى *ʕitwaasa* /vi/ to be comforted, be consoled. - iva *mitwaasi*.

و س ى م

وسيمى *wiseemi* /adj/ type of sheep (from Oussim in Egypt) characterized by its thin tail (in contrast with the *baladi* type).

و ش ح

وشح *waʃʃaḥ* /vi/ to sing *tawaʃiiḥ*. - vn *tawʃiiḥ*; ava *miwaʃʃiḥ*; pva *miwaʃʃaḥ*.

توشيح *tawʃiiḥ* /n pl *tawaʃiiḥ*/ stanzas of classical Arabic poetry sung in praise of the Prophet.

موشّح *muwaʃʃaḥ* /n pl -*aat*/ lyrical poetry set to music (of Andalusian origin). ‖*ɛamal muwaʃʃaḥ* to cause a commotion, cause a fuss, as in *miraat-u dayman bi-tiɛmil-lu muwaʃʃaḥ lamma b-yiʕaxxar* his wife always gives him a lot of trouble when he's late.

موشّحاتى *muwaʃʃaḥaati* /n pl -*yya*/ singer of *muwaʃʃaḥaat*.

و ش ش [1]

وش *wiʃʃ* /n pl *wuʃuuʃ, wiʃuuʃ, wiʃaaʃ, ʕawʃaaʃ*/ 1 face (of a person or animal). *wiʃʃ-u nɛaaṣ ʃukulaata* his face was smeared with chocolate. *wiʃʃ-u lis-sabbuura* he is facing the blackboard. ‖*ḥooḍ wiʃʃ* wash-basin. - *kal wiʃʃ(-u)* to reproach (s.o.), as in *ʕin-naas kalit wiʃʃ-i*

kminni skitt[a] *ʕal-mawḍuuʕ da* people reproached me for having kept silent about this subject. - *xad wiff-a-ha* he deflowered her. - *ʃir-raagil da b-wiffeen* that man is two-faced. - *wiff-ak wala l-ʔamar* long time, no see! - *ʕala mala wiff-u* in haste and under constraint, as in *ga l-ʕaskari xad-u l-ʔism*[a] *ʕala mala wiff-u* the policeman came and bundled him off to the station. - *ʃawaddi wiff-i (minnu) feen* I am very embarrassed (to see him). - *ma-luu-ʃ wiff*[i] *ykallim-ni* he's too embarrassed to talk to me. - *ma-ʃiddet-hum-ʃ*[i] *wiff* I ignored them. - *bi-kull*[i] *wiff*[i] *makʃuuf* brazenly. - *wiff*[i] *fil-ʃarḍ* embarrassed, as in *xalleetu wiff-i fil-ʃarḍ* you caused me great embarrassment. - *la wiff-ak wala ḍahr-ak* that's all there is to it, and that's that. - *wiff-u yiqṭaʕ il-xamiira min il-beet* he brings bad luck with him. - *fil-wiff*[i] *mraaya w-fil-qafa sillaaya [prov]* ≈ he'll smile to your face and stab you in the back. - *wiqif fi-wiff(-u)* to stand up to (s.o.). - *fi-wiff-u wala txiff-u* frankly, without beating around the bush. - *wiff-u ʒayy*[i] *ʔafaa* in bad shape, badly beaten. - *ʒayy*[i] *wiff-u* bad, no-good, awful, as in *ʃiddet-lu kilmiteen ʒayy*[i] *wiff-u* I gave him one hell of a telling-off. - *wi-ʃaadi wiff iḍ-ḍeef* and no more was heard from (him), as in *xad ig-gineeh wi-ʃaadi wiff iḍ-ḍeef* he took the pound and has never been heard from since. - *xad gineeh bi-wiff-u* he got a whole pound. - *ya wiff-* how impudent, how cheeky, as in *ya wiff-ak lamma tistilif min ʕayyil ṣuɣayyar ʒayy*[i] *da* it's shameless of you to borrow money from a small child like that. - *di f-wiff-i ʃana* this reflects badly on me. - *ʃana ma-b-addi-luu-ʃ wiff* I don't encourage him. - *wiff-u f-wiff-i* I'm face to face with him. - *wiff-u ḫilw*[a] (or *wiḫif*) *ʕalayya* he brings good (or bad) luck to me. **2** mask. *laabis wiff* he's wearing a mask. *wiff*[i] *lḫaam* welder's mask. **3a** surface, upper surface, outer layer. *ʃil-muṣawwaraati dalaʔ il-madda ʕala wiff iz-zinka* the photographer poured the substance on the surface of the zinc plate. *fii samna ʕala wiff*[i] *ṣniyyit il-baṭaaṭis* there is clarified butter over the top of the dish of potatoes. ‖ *wiff il-ʔahwa* foam on the surface of Turkish coffee. - *wiff il-laban* the skin of the milk (e.g., after boiling). - *wiff ig-gazma* vamp of a shoe. **3b** front, façade. *raas il-xaruuf miʕallaʔa ʕala wiff is-sandara* the sheep's head is hung on the front of the loft. *wiff is-sideeri* the front of the vest. ‖ *buus ʃiid-ak wiff*[i] *w-ḍahr* (kiss the front and back of your hand) be grateful to God. - *wiff ik-kabbaas* screw-top on a pump-cylinder (of, e.g., a primus stove). - *ḫ-axḍ-u min wiff-ak* I'll spare him your attention. - *ɣuur min wiff-i* get lost! **3c** side. *ʃil-mutoor marbuuṭ bi-musmaar min in-nuṣṣ*[i] *w-lu ṣamulteen mil-wifaaf* the engine is attached by a bolt in the centre and two rivets on the sides. ‖ *wiff il-ʃusṭuwaana* the side of a gramophone record. - *wiff il-ʔumaaf* the right side of the fabric. **4** layer, coat.. *dahan il-ʃooḍa wiff*[i] *buuya* he gave the room a coat of paint. ‖ *ʃaaxir wiff [agric]* last crop of the season produced by an everbearing plant. - *ḫalaʔ ḍaʔn-u wiffeen* he shaved his face twice. - *xad ig-gild*[i] *wiff*[i] *tafʕiir* he went over the hide once (with a razor) removing the hair. — /in constr/ **5** the type for, the sort cut out for. *baayin ʕaleeha miʃ wiff*[i] *niʕma* she seems not to be cut out for the soft life. *da wiff*[i] *suguun* he's a jailbird. *da miʃ wiff*[i] *kida* he isn't that sort. *da miʃ wiff*[i] *ʃuɣl* he's not the hard-working type. *da miʃ wiff*[i] *gawaaz* he is not the marrying type. *da wiff*[i] *faʔr* he's poverty prone. **6** verge, proximity, brink. *baʔeena (f-)wiff iṣ-ṣubḥ* it is nearly morning. *ʕala wiff id-daraga l-xamsa* about to attain the fifth (civil service) grade.

وشّش *waffif* /vt/ to arrange with an attractive top layer. *da raagil ɣaffaaf* - *waffif ʔafaṣ il-manga w-ʔalb il-ʔafaṣ kull-u manga xasraana* the man's a swindler - he's put a layer of good mangoes on top of the crate, but inside it's full of rotten ones. - vn *tawfiif*; ava/pva *muwaffif*.

اتوشّش *ʃitwaffif* /vi/ passive of *waffif*. - iva *mitwaffif*.

و ش ش[2]

وشّ *waff*[1] *(i)* /vi/ to buzz, hum. *widaan-i bi-ṭṭaffar wi-bi-twiff* my ears are whistling and buzzing. - vn *waff, waffafaan*; ava *waafif*.

وشّ *waff*[2] /n/ **1** hum, shushing sound. **2** craziness, idiocy. *ʕandu waff* he's dotty. — /adj invar/ **3** crazy, idiotic. *raagil waff* a screwball of a man. *mihna waff* a maddening profession.

اتوشّ *ʃitwaff* /vi/ to become crazy. *ʃinta twaffeet fi-ʕaʔl-ak* have you gone mad? - ava *mitwaff*.

و ش ك

وشك *waʃak, waʃk: ʕala waʃak* or *ʕala waʃk* on the point of, as in *waṣalna l-maktab wi-huwwa ʕala waʃk innu yiʔfil* we reached the office just as it was about to close.

وشيك *waʃiik* /adj */ near, imminent *ḫall*[i] *waʃiik* an imminent solution.

أوشك *ʔawʃak* /vi/ **1** to be about (to do s.th.) *ʃis-sana d-dirasiyya ʔawʃakit ʃinnaha tixlaṣ* the academic year is about to finish. **2** to draw near. *ʃil-ʕiid ʔawʃak* the feast is nearly with us. - ava *muuʃik*↑.

و ش م

وشم *waʃam*↑ *(i)* /vt/ to tattoo, have tattooed. *waʃam-lu ʔasad ʕala sidr-u* he had a lion tattooed on his chest. - vn

waʃm; ava *waaʃim*; pva *mawʃuum*.
وشم *waʃm* /coll n/ tattoo(s), tattooing.
وشمة *waʃma* /unit n, pl *-aat*/ a tattoo.
اتوشم *ʔitwaʃam* /vi/ to be tattooed. -iva *mitwiʃim*.

و ش ن
وشنة *wiʃna* <T *viʃne*> /n/ sour cherry, morello cherry.

و ش و ش
وشوش *waʃwiʃ* /vt/ to whisper to (s.o.). *nadaht ir-rayyis wi-waʃwiʃt-u ʕalaʃaan ma-ħadd^{i}-ʃ yismaʕ* I called the waiter and whispered in his ear so that no one could hear. ‖ *waʃwiʃ id-dakar* (1) *[magic]* whisper to the male (sea-shell) and tell it what you want to know about (said to customers by fortunetellers who use sea-shells for soothsaying). (2) *[joc]* come tell it all to papa. -vn *waʃwaʃa*; ava/pva *miwaʃwiʃ*.
وشوشة *waʃwaʃa* /n/ whisper. ‖ *(ʕilm) il-waʃwaʃa* method of psychomancy in which the medium allegedly communicates with spirits by whispering.
اتوشوش *ʔitwaʃwiʃ* /vi/ **1** to whisper. *ʔit-talamza kaanu b-yitwaʃwiʃu maʕa baʕḍ* the students were whispering together. **2** (impersonal) passive of *waʃwiʃ*. *bi-tħibb^{i} yitwaʃwiʃ laha* she loves to be whispered to. -vn *tiwaʃwiiʃ*; ava/iva *mitwaʃwiʃ*.

و ش ى
وشى *waʃa (i)* /vi/ to inform (on s.o.). *waʃa biihum lil-buliiṣ* he betrayed them to the police. -ava *waaʃi*.
وشاية *wiʃaaya* /n pl *-aat*/ (defamatory) tale, (malicious) gossip.
اتوشى *ʔitwaʃa* /vi/ (impersonal) passive of *waʃa*. *ʔitwaʃa bii lil-buliiṣ* he was betrayed to the police. -iva *mitwiʃi*.
وشّى *waʃʃa↑ (i)* /vt/ to embroider. -vn *tawʃiyya*; ava *miwaʃʃi, muwaʃʃi*; pva *miwaʃʃi, muwaʃʃa*.
اتوشّى *ʔitwaʃʃa* /vi/ to be embroidered. -iva *mitwaʃʃi*.

و ص ف
وصف *waṣaf (i)* /vt/ **1** to describe. *ʔizzaay niʔdar niwṣif it-taṣarruf da* how can we describe this behaviour? -/ the literary passive form occurs/ *laa yuuṣaf* beyond description. **2** to prescribe. *bi-yiwṣifuu-ha lin-naas illi ʕayza tbaṭṭal is-sagaayir* they prescribe it for people who want to give up cigarettes. -vn *waṣf*; ava *waaṣif*; pva *mawṣuuf*.
وصف *waṣf* /n pl *ʔawṣaaf*/ **1** description. *ʔil-waṣf it-tafṣiili lil-mutoor* the detailed description of the motor. *ħaaga tfuuʔ il-waṣf* something indescribable. ‖ *ʔitʔaṭaʕ waṣf-u* it is unique, there is nothing like it any more. -*bi-waṣf-* in the capacity of, as in *ʔana b-akallim-ak bi-waṣf-i mudiir if-ʃirka di* I am speaking to you in my capacity as director of this company. **2** *ʔawṣaaf* /pl n/ characteristics, qualities. *ʔil-ħuṣaan il-ʕarabi lu ʔawṣaaf muʕayyana* the Arab horse has certain characteristics. *kaamil il-ʔawṣaaf* immaculate.
وصفة *waṣfa* /n pl *-aat*/ **1** set of instructions or directions. *ʔult-i-lhum waṣfit il-beet ʕalaʃaan yilaʔuu b-suhuula* I gave them directions to the house so they could find it easily. **2a** prescription. *waṣfa baladi* folk remedy, folk prescription. *waṣfa lil-ħabal ma-txayyib-ʃ* an infallible method for becoming pregnant. **2b** recipe. *waṣfit keek* cake recipe.
وصفى *waṣfi* /adj */ descriptive. ‖ *fahrasa waṣfiyya* descriptive cataloguing.
صفة *ṣifa* /n pl *-aat*/ **1** characteristic, quality, attribute, trait. *ʔawħaʃ ṣifa fii hiyya k-kidb* the worst thing about him is his lying. **2** position, capacity. *ʔeeh ṣifat ħaḍrit-ak fil-mawḍuuʕ da* what is your concern with this matter?! *bi-tkallim-ni b-ṣifat ʔeeh. - bi-ṣifat-i waaħid tihimm-u maṣlaħt-ak* 'Who are you to be speaking to me?' 'I am speaking as one who is concerned for your welfare.' *dafaʕ il-mablaʁ bi-ṣifat taʔmiin* he paid the sum of money as a surety. ‖ *bi-ṣifa* in a (certain) manner, as in *biṣ-ṣifa xaaṣṣa* especially, *bi-ṣifa ʕaagila* urgently. -*ma-luu-ʃ ṣifa* of no consequence, as in *da mawḍuuʕ ma-luu-ʃ ṣifa bil-marra* this is a very trivial matter indeed, *ma-luu-ʃ ṣifa maʕaana* he has nothing to do with us.
وصيفة *waṣiifa* /fem n, pl *-aat, waṣaayif*/ *[obsol]* lady-in-waiting.
مواصفات *muwaṣafaat* /pl n/ **1** specifications. *ħa-niʕmil il-magaari ħasab muwaṣafaat il-ħukuuma* we'll make the drains according to government specifications. **2** properties, qualities. *ʔil-ʔumaaʃ da lu muwaṣafaat munasba l-ʕamaliyyit iṣ-ṣibaaya* this cloth has properties which make it suitable for dyeing.
اتوصف *ʔitwaṣaf* /vi/ **1** to be described. ‖ *ma-twaṣaf-ʃ* unique, the likes of which have never been seen, as in *balwa ma-twaṣafit-ʃ* an unprecedented calamity. **2** to be prescribed. -iva *mitwiṣif*.
انوصف *ʔinwaṣaf* = *ʔitwaṣaf*. -iva *minwiṣif*.
وصّف *waṣṣaf (a)* /vt/ to extol, enumerate the qualities of. *min yoom ma rigʕu w-humma ʔaʕdiin yiwaṣṣafu (fi-)lli ʃafuu f-makka* since their return they have been continually describing what they saw in Mecca. -vn *tawṣiif*; ava/pva *miwaṣṣaf*.
اتوصّف *ʔitwaṣṣaf* /vi/ passive of *waṣṣaf*. -iva *mitwaṣṣaf*.
اتصف *ʔittaṣaf↑* /vi/ to possess as a characteristic, quali-

ty, or peculiarity. *ʕil-mudarris in-naagiḥ bi-nagid ʕinnu b-yattaṣif bi-baʕḍ[i] ṣifaat il-qaaʕid* we find that the successful teacher is marked by some of the qualities of leadership. - vn *ʕittiṣaaf*; ava *mittiṣif, muttaṣif*.

مستوصف *mustawṣaf* /n pl *-aat*/ welfare clinic.

و ص ل

وصل *wiṣil[1], waṣal[1] (a)* /vt and vi/ **1** to reach, come to. *lamma niwṣal (li-)makka ninzil fi-beet il-muṭawwif* when we arrive at Mecca we stay at the pilgrim guide's house. *laazim il-ʕigaar yiwṣal-ni ʕawwil if-fahr* I must get the rent on the first of the month. *waṣal-li gawaab ʕimbaariḥ* I got a letter yesterday. **2** to attain. *ʕil-muwaẓẓaf wiṣil (li-)daraga muʕayyana* the civil servant reached a certain grade. *ʕana wiṣilt id-daraga s-sadsa* I reached the sixth grade. **3** to extend to, reach as far as. *ḥitat il-ʕarḍ illi l-lawwaaṭa ma-b-tiwṣal-haa-ʃ* parts of the ground which the drag does not reach. **4** to become as much as. *fiṣ-ṣeef il-burtaqaan bi-yiwṣal (li-)gineeh il-kiilu* in summer oranges go up to a pound a kilo. *saʕaat ṭul-ha yiwṣal (li-)mitreen* sometimes it reaches two metres in length. **5** to go (somewhere) briefly and return. *xallii-k hina ʕala baal ma ʕawṣal il-beet* stay here while I nip over to the house. *wiṣil miʃwaar* he's gone on an errand (but will soon be back). — /vi/ **6** to arrive. *goz-ha wiṣil wi-tʕaʃʃa* her husband came (home) and had his supper. ‖ *laʕ ma-tiwṣal-ʃ* no, it won't come to that. - *ʕilli ḥaṣal waṣal* ≈ it's no use crying over spilt milk. **7** to arrive (at an objective). *ʕid-daggaal yiwṣal li-natiiga tuʕtabar ʕagiiba* the impostor achieves a result which is considered amazing. *miʃ ḥa-niwṣal li-ḥall* we shall not arrive at a solution. ‖ *ʕaayiz yiwṣal bi-ʕayy[i] ṭariiqa* he wants to succeed by any means. - vn *wuṣuul*; ava *waaṣil*.

وصل *waṣal[2], wiṣil[2] (i)* /vt/ to link, join together. *ʕiwṣil il-ḥittiteen dool fi-baʕḍ* join these two pieces together. - vn *waṣalaan, waṣl*; ava *waaṣil*; pva *mawṣuul*.

وصول *wuṣuul* /n/ arrival. ‖ *ʕilm[i] wuṣuul [communic]* receipt of delivery for a registered parcel or letter.

وصولى *wuṣuuli* /adj */ opportunist. *raagil wuṣuuli* opportunist, social climber.

وصوليّة *wuṣuliyya* /n/ unscrupulous self-seeking, opportunism, sycophancy.

وصل *waṣl* /n pl *wuṣulaat, wuṣúla*/ receipt. *bi-niḥfaẓ wuṣulaat il-ʕigaar li-ʕinn[i] ṣaaḥib il-beet ḥaraami* we keep our rent receipts because the landlord is a crook.

وصلة *waṣla* /n pl *-aat*/ **1** joint, connection. *ʕig-gild[i] fii waṣla* there is a joint in the leather. **2** section. *ḥuṭṭ[i] kamaan waṣla lil-masuura* add another section to the pipe. **3** through-way. *fii waṣla ʕurayyiba min hina ʕala ʃaariʕ silimaan* there's a short cut from here to Suleyman Pasha Street. **4** one of several songs or other items in a performance, each followed by an interval. **5** extra supply, refill (in café jargon). *haat waṣlit sukkar* bring some more sugar. *haat waṣla liʃ-ʃiiʃa* bring another piece of charcoal for the water-pipe.

موصول *mawṣuul* /n/ *[mus]* pipe of the *muzmaar* type, constructed so that joints may be added or removed to change the key.

صلة *ṣila, ṣila* /n pl *-aat*/ connection, link. *fii benna ṣilit ḥubb* there's a love-relationship between us. *ṣilit ʕaraaba* family connection.

أوصال *ʕawṣaal* /pl n/ limbs, members (of the body). *ʕin-nafaaṭ dabb[i] f-ʕawṣaal-i* I felt a burst of energy in my limbs.

اتوصل *ʕitwaṣal* /vi/ passive of *waṣal[2]*. - iva *mitwaṣal*.

وصّل *waṣṣal* /vt/ **1a** to convey, take from one place to another, deliver. *ʕil-ʕarabiyya di ʕafaan tiwaṣṣal-u f-ʃuɣl* this car is for taking him to work. *ʕis-saaʕi bi-ywaṣṣal ig-gawabaat* the office-boy delivers the letters. **1b** to accompany from one place to another. *ḥ-awaṣṣal-ak li-ḥadd[i] ma tirkab it-taks* I'll go along with you till you get a taxi. **2** *[elec]* to conduct. *ʕin-naḥaas gayyid it-tawṣiil lik-kahraba* copper is a good conductor of electricity. **3** to connect, join. *ʕil-xarṭuum bi-ywaṣṣal id-dooraq bil-mabsam* the hose connects the glass jar (of the water-pipe) to the mouth-piece. — /vi/ **4** to act as a connection. *ʕil-masuura di bi-twaṣṣal been is-sifoon wik-kabineeh* this pipe connects the cistern and the lavatory. - vn *tawṣiil*; ava *miwaṣṣal, muwaṣṣil*; pva *miwaṣṣal, muwaṣṣal*.

توصيلة *tawṣiila* /n pl *-aat, tawaṣiil*/ **1** *[elec]* contact, connection. **2** ride (from one point to another). *ʕiddaa-lu tawṣiila lil-madrasa* he gave him a lift to the school. **3** connecting road. *tawṣiila liz-zaqaziiq* a road that leads to Zagazig.

موصّل *muwaṣṣil* /n pl *-aat*/ *[elec]* conductor. *muwaṣṣil gayyid* a good conductor.

موصّلاتى *miwaṣṣalaati* /n pl *-yya*/ *[deris]* messenger, go-between.

اتوصّل *ʕitwaṣṣal* /vi/ passive of *waṣṣal*. - iva *mitwaṣṣal*.

توصّل *tawaṣṣal†* /vi/ to attain, achieve. *tawaṣṣal li-ḥall* he arrived at a solution. - vn *tawaṣṣul*; ava *mutawaṣṣil*.

واصل *waaṣil, waaṣal* /vt/ **1** to continue, persevere in. *yiwaaṣil il-ʕibaada leel maʕa nhaar* he goes on praying day and night. **2** to have a love affair with. - vn *wiṣaal, muwaṣala*; ava *miwaaṣil*.

وصال *wiṣaal* /n/ **1** meeting (of lovers), (lovers') tryst.

ʕana ţaalib il-wiṣaal I want a get-together with my love. **2** close relationship, communion, mutual understanding. *rabb-i-na ydiim il-wiṣaal* may God keep (us) always close to each other.

مواصلة *muwaṣla* /n pl *-aat*/ means of transport. *bi-yiḥṣal kitiir ʕinn in-naas miʃ laqya muwaṣla trawwaḥ-hum* it often happens that people can find no way to get home. *ɛaawiz yilḥaq fuxl-u qabl[i] zaḥmit il-muwaṣlaat* he wants to get to work before the rush hour. ‖ *wizaarit il-muwaṣlaat* Ministry of Communications.

اتواصل ʕitwaaṣil, ʕitwaaṣal /vi/ passive of *waaṣil*. -iva *mitwaaṣil*.

متواصل *mutawaaṣil* /adj/ continuous. *ɛamaliyyaat mutawaṣla* continuous operations.

أوصل ʕawṣal↓: *ʕeef ʕawṣal-ak ʕinta liihum* you don't reach their standards.

إيصال ʕiṣaal, ʕiiṣaal↑ /n pl *-aat*/ receipt. *bi-ygib-li ʕiṣaal muɛtamad mil-xaziina* he's bringing me a receipt approved by the cashier's office.

اتّصل ʕittaṣal /vi/ **1** to be in contact, get in touch. *ma-ʕaɛraf-ʃ attaṣil biik* I don't know how to get in touch with you. *ḥ-attaṣil biik bukra bit-tilifoon* I'll telephone you tomorrow. **2** to be connected. *ʕil-ʕaks[i] mittiṣil bid-darabuks* the axle connects with the gear-box. ‖ *raagil muttaṣil* a well-connected man. -vn *ʕittiṣaal*; ava *mittiṣil, muttaṣil*.

اتّصال ʕittiṣaal /n pl *-aat*/ connection, link. *kunt[i] b-akallim-u bit-tilifoon lamma l-ittiṣaal itqaṭaɛ* I was talking to him on the phone when we were cut off. *ʕis-safiir lu ʕittiṣalaat wasɛa* the ambassador has extensive connections. *ʕittiṣaal ginsi* sexual intercourse. ‖ *ɛala ttiṣaal* in contact with, as in *xallii-k ɛala ttiṣaal big-gamɛa* stay in contact with the university. -*ɛamal ittiṣalaat* to get in touch with people.

استوصل ʕistawṣal↓ /vi/ to find out, discover or detect after great effort. *ʕana ḥ-astawṣal luhum lamma ykuunu taḥt il-ʕarḍ* I'll find them even if they're at the other end of the earth. ‖ *huwwa-ḥna nistawṣal* ≈ we cannot place ourselves on the same high level as yourself (polite response to a suggestion of equality between the two speakers). - ava *mistawṣal*.

و ص م

وصمة *waṣma*↑ /n pl *-aat*/ disgrace, mark of disgrace, blemish. *di waṣma f-sumɛit il-ɛeela* this is a slur on the family's reputation. *waṣmit ɛaar* great shame.

و ص ى

وصى *waṣi* /n pl *ʕawṣiya*/ legal guardian. ‖ *waṣi ɛala l-ɛarf* regent.

وصاية *wiṣaaya* /n/ **1** guardianship. *ʕil-wiṣaaya titfakk[a] ɛannak baɛd[i] sana* your guardianship ends in a year's time. **2** mandate. **3** recommendation. *kaan mitɛayyin bi-wṣaaya* he was appointed because of a recommendation.

وصيّة *wiṣiyya, waṣiyya* /n pl *waṣaaya*/ **1** advice. *di wṣiyyit-i lik* this is my advice to you. ‖ *ʕil-waṣaaya l-ɛaʃr* the Ten Commandments. **2** last will and testament. *fataḥu l-wiṣiyya w-qaruu-ha* they opened the will and read it. *ʕil-waṣiyya l-wagba [leg]* compulsory will in which a man whose son has died leaving children is obliged to bequeath to those children that share of his estate which their father would have inherited.

وصّى *waṣṣa (i)* /vt/ **1** to enjoin, direct. *waṣṣeet-u yrawwaḥ ţawwaali* I urged him to go home immediately. *ʕilli waṣṣa ɛaleeha l-ḥakiim* ≈ just what the doctor ordered, as in *ɛalqa mi-lli waṣṣa ɛaleeha l-ḥakiim* just the thrashing needed. ‖ *ma-twaṣṣi-nii-ʃ* don't press me (I am already aware of the necessity). **2a** to enjoin the concern of (s.o.). *waṣṣit-ni ɛal-wilaad* she asked me to take care of the kids. *ʕibqa waṣṣi l-mudiir ɛala-bn-i* do recommend my son to the director. *ʕin-nabi waṣṣa ɛala saabiɛ gaar* ≈ even the most distant neighbour should be given good treatment. **2b** to solicit the help of (s.o., in obtaining something). *ʕibqa waṣṣi l-furn[a] ɛala keeka ɛalaʃaan il-ḥafla* get the bakery to prepare (or send) a cake for the party. - vn *tawṣiyya*; ava *miwaṣṣi*.

¶ *waṣṣa bi-* to bequeath. *waṣṣit bi-kull[i] sarwit-ha lil-quṭṭa* she bequeathed all her wealth to the cat.

توصيّة *tawṣiyya* /n pl *-aat*/ recommendation. *ma-ḥadd[i]-ʃ yitɛayyin fil-wizaara min ɣeer tawṣiyya* no one can get a job in the ministry without a recommendation.

موصّى *muwaṣṣa* /pva/ ‖ *muwaṣṣa ɛalee [communic]* registered (of the mail).

اتوصّى ʕitwaṣṣa /vi/ **1** to behave considerately or generously. *ʕig-gazzaar bi-yitwaṣṣa biyya ɛaʃaan ibn-u ɛandi fil-faṣl* the butcher gives me special treatment because his son is in the class I teach. ‖ *ʕitwaṣṣaa-bu* give him a hard time! - *da ma-yitwaṣṣaa-ʃ* he is terrible. **2** passive of *waṣṣa*. - ava/iva *mitwaṣṣi*.

أوصى ʕawṣa↑ /vi/ to make a bequest. *ʕawṣat-li b-kull illi ɛandaha* she bequeathed to me everything she had. - ava *muuṣi*; pva *muuṣa*.

يوصي *yiwṣi*↓ /vt, imperf only/ to urge, advise. *ʕawṣii-k ɛumr-ak ma-tkallim in-naas dool* I urge you never to talk to these people.

و ض ء see و ض ى

و ض ب

وضّب *waḍḍab* /vt/ to prepare, put in order, adjust, arrange. *ʔis-sikirtiira waḍḍabit-li muqabla maʕa l-mudiir* the secretary arranged a meeting with the director for me. *laazim ʔawaḍḍab il-ʕarabiyya* I must get the car fixed. *baṣṣ[i] fil-miraaya w-waḍḍab nafs-u* he looked in the mirror and tidied himself up. *waḍḍabi l-ʔakl[a] ʕala baal ma ʔargaʕ* have the food ready by the time I come back. *waḍḍab ig-gariida [journ]* to lay out the pages. ‖*qism it-tawḍiib [print]* layout division. - *waḍḍab il-qaṭr [communic]* to couple a train. - *xud-u ya ʕaskari waḍḍab-u* officer, take him and teach him a lesson! - vn *tawḍiib*; ava/pva *miwaḍḍab*.

موضّب *muwaḍḍib* /n */ *[print]* layout specialist.

موضّباتي *miwaḍḍabaati* /n pl *-yya/ [print]* layout specialist.

اتوضّب ʔitwaḍḍab /vi/ to be prepared, put in order, adjusted or arranged. - iva *mitwaḍḍab*.

و ض ح

وضح *waḍaḥ (a)* /vi/ to become clear, become obvious. *ʔil-masʔala waḍaḥit dilwaqti* the matter has become clear now. - vn *wuḍuuḥ*; ava *waaḍiḥ*.

واضح *waaḍiḥ* /adj */ clear, obvious.

أوضح ʔawḍaḥ[1] /el/ clearer/clearest.

وضّح *waḍḍaḥ* /vt/ to explain, clarify. *miʃ ʕaarif ʔawaḍḍaḥ il-mawḍuuʕ* I don't know how to clarify the matter. - vn *tawḍiiḥ*; ava/pva *miwaḍḍaḥ*.

توضيحي *tawḍiiḥi* /adj/ illustrative, explanatory. *ʔiddii-ni rasma tawḍiḥiyya l-mutoor il-ʕarabiyya* give me an illustrative drawing of the car engine.

اتوضّح ʔitwaḍḍaḥ /vi/ to be explained, be clarified. - iva *mitwaḍḍaḥ*.

أوضح ʔawḍaḥ[2]↑ /vt/ to clarify. - vn *ʔiiḍaaḥ*.

إيضاح ʔiḍaaḥ, ʔiiḍaaḥ /n/ clarification. *wasaaʔil il-ʔiḍaaḥ [educ]* explanatory aids.

اتّضح ʔittaḍaḥ /vi/ to become clear. *ʔittaḍaḥ liina ʔinn[i] miʃ huwwa lli kaan hina leelit ʔimbaariḥ* it became evident to us that it wasn't he who was here last night. - vn *ʔittiḍaaḥ*; ava *mittiḍiḥ*.

استوضح ʔistawḍaḥ /vt/ to seek (and gain) clarification of. *ʔana stawḍaḥt il-ḥikaaya min ʔawwil-ha l-ʔaxir-ha* I clarified the matter from beginning to end. - vn *ʔistiwḍaaḥ, ʔistiḍaaḥ*; ava *mistawaaḥ*.

و ض ع

وضع *waḍaʕ (yiwḍaʕ, yaḍaʕ↑)* /vt/ **1** to put, place. *leeh tiwḍaʕ nafs-ak fil-mawqif il-muḥrig da* why are you placing yourself in this embarrassing situation? *laazim taḍaʕ maṣlaḥit ʔixwaat-ak fi-ʕtibaar-ak* you should take the interests of your brothers and sisters into consideration. ‖*waḍaʕ yadd-u ʕal-ʕimaara* he took possession of the building by occupancy. - *waḍʕ il-yadd* (1) squatters' rights. (2) *[Chr]* laying on of hands. - *waḍaʕ taqriir* to make a report. - *ʔinta waḍaʕt[i] xitm-ak ʕaleeha [abus]* (have you placed your seal on it?) have you taken possession of it? **2** to establish, set up. *ʔil-ḥukuuma waḍaʕit niẓaam gidiid* the government established a new system. **3** to give birth. *waḍaʕit binayya ẓayy il-qamar* she gave birth to a very pretty little girl. *ʔagaazit waḍʕ* maternity leave. - vn *waḍʕ*; ava *waaḍiʕ*; pva *mawḍuuʕ*.

وضع *waḍʕ* /n pl *ʔawḍaaʕ/* **1a** position, location. *bi-taaxud nafs il-waḍʕ[i] btaaʕ is-siriir* it takes the same position as the bed. **1b** position, status. *il-mudiir lu waḍʕ-u* the director has his own status. **2** situation. *ʔil-waḍʕ[i] kaan fawḍa* the situation was chaotic. **3** pose. *xad laha ṣuwar fi-ʔawḍaaʕ muxtalifa* he took pictures of her in different poses.

موضوع *mawḍuuʕ* /n pl *mawaḍiiʕ, mawḍuʕaat/* **1** subject, topic, theme. *ʔixtaar mawḍuuʕ wi-ktib ʕalee* choose a subject and write about it. *ʔeeh mawḍuuʕ ir-risaala* what's the topic of the thesis? **2** matter, affair, business. *ʔana ʃaayil ʔiid-i min il-mawḍuuʕ da* I'm washing my hands of this affair. *kaan il-mawḍuuʕ maaʃi maẓbuuṭ* everything was going along fine. ‖*ʔil-mawḍuuʕ ʔinn-* the fact of the matter is, as in *ʔil-mawḍuuʕ ʔinnu tgawwiz il-bint* the fact of the matter is that he married the girl.

موضوعي *mawḍuuʕi↑* /adj */ **1** objective. *xallii-na mawḍuʕiyyiin fil-munaqʃa* let's be objective in the discussion. **2** according to subject. *taṣniif mawḍuuʕi* classification according to subject.

¶ *mawḍuʕiyyan↑* /adv/ objectively. *laazim tinaqiʃ-ni mawḍuʕiyyan* you've got to discuss with me objectively.

وضاعة *waḍaaʕa* /n/ baseness, meanness. *raagil fi-ɣaayit il-waḍaaʕa* a very contemptible man.

وضيع *waḍiiʕ* /adj */ base. *ʔaxlaaq waḍiiʕa* low manners.

أوضع ʔawḍaʕ /el/ baser/basest.

موضع *mawḍiʕ* /n pl *mawaaḍiʕ*/ place, spot. *fi-nafs il-mawḍiʕ* on the same spot.

موضعي *mawḍiʕi* /adj */ local. *bing[i] mawḍiʕi* local anaesthetic.

اتوضع ʔitwaḍaʕ /vi/ passive of *waḍaʕ*. - iva *mitwiḍiʕ*.

انوضع ʔinwaḍaʕ = ʔitwaḍaʕ. - iva *minwiḍiʕ*.

اتواضع ʔitwaaḍaʕ /vi/ to be humble, act in a modest way. *wi-lli yitwaaḍaʕ yibqa ɣalṭaan* is he who behaves

modestly at fault? -vn *tawaaduɛ↑*; ava *mitwaadiɛ, mutawaadiɛ*.

اتّضاع *ʔittiḍaaɛ* /n/ humility, modesty, self-effacement.

استوضع *ʔistawḍaɛ* /vt/ to consider base. *lamma ʃufna ʔafɛaal-u stawḍaɛnaa* when we saw the way he behaved we marked him out as a low type. -ava *mistawḍaɛ*.

و ض ى

وضوء *wuḍuww, wiḍuww* /n/ *[Isl]* ritual ablution before prayer. *ʔil-ʔinsaan illi ɛaayiz yiṣalli laazim yitwaḍḍa wuḍuww[i] maẓbuuṭ* a person who wishes to pray must perform the ritual ablutions correctly.

ميضة *meeḍa* /n pl *-aat*/ fountain for ablutions in a mosque.

وضّى *waḍḍa* /vt/ *[Isl]* **1** to assist (s.o.) to perform ritual ablutions before prayer. *taɛaala lamma ʔawaḍḍii-k* come, I'll help you wash for prayer. **2** to suffice (of water) for the performing of the ablution. *ʔil-mayya di twaḍḍi ɛafara* this is enough water for ten (i.e. a lot of people) to wash for prayer. -vn *tawḍiyya*; ava *miwaḍḍi*.

اتوضّى *ʔitwaḍḍa* /vi/ *[Isl]* to perform ritual ablutions. -vn *tawḍiyya*; ava *mitwaḍḍi*.

و ط ء see و ط ى

و ط د

وطيد *waṭiid↑* /adj */ firm. *ṣadaaqa waṭiida* strong friendship.

أوطد *ʔawṭad* /el/ firmer/firmest.

وطّد *waṭṭad* /vt/ to make firm, strengthen. *waṭṭad ɛilaqt-u biiha* he strengthened his relationship with her. *ʔana waṭṭadt[i] nafs-i ɛala kida* I inured myself to the situation. -vn *tawṭiid*; ava/pva *miwaṭṭad*.

اتوطّد *ʔitwaṭṭad* /vi/ to be made firm, be strengthened. -iva *mitwaṭṭid*.

و ط ر[1]

وطّر *waṭṭar* /vt/ to frame (a space) for the purpose of construction or decoration. -vn *tawṭiir*; ava/pva *miwaṭṭar*.

اتوطّر *ʔitwaṭṭar* /vi/ passive of *waṭṭar*. -iva *mitwaṭṭar*.

و ط ر[2]

وطر *waṭar* /n pl *ʔawṭaar*/ objective, aim, end. *lamma xad waṭar-u minha sab-ha w-raaḥ li-ɣer-ha* when he had got what he wanted out of her, he left her and went off to someone else.

و ط ن

وطن *waṭan* /n pl *ʔawṭaan*/ homeland, nation.

وطنى *waṭani* /adj */ **1** national. ‖ *ʔil-ḥayy il-waṭani [obsol]* the native quarter. **2** patriotic, nationalistic.

وطنيّة *waṭaniyya* /n/ patriotism, nationalism.

موطن *mawṭin↑* /n pl *mawaaṭin*/ **1** native place, home town. *ʔeeh il-mawṭin il-ʔaṣli btaaɛ-ak* where do you come from originally? **2** source, centre. *laazim ɋism il-ʔiṭfaaʔ yinabbih in-naas ɛala mawaaṭin il-xuṭuura f-buyut-hum* the fire department ought to alert people to sources of danger in their homes. *mawaaṭin iḍ-ḍaɛf* points of weakness.

مواطن *muwaaṭin* /n */ citizen.

وطّن *waṭṭan* /vt/ **1** to cause to settle down. *tawṭiin il-badw* the settling of the nomads. **2** to accustom, get (s.o.) used (to s.th.). *ma-yṣaḥḥ[i]-ʃ tiwaṭṭan-hum ɛala kida* you shouldn't get them used to this. *laazim tiwaṭṭani nafs-ik min dilwaɋti ɛala ʔinnik misafra mɛaaya* you must get yourself accustomed from now on to the fact that you are going away with me. -vn *tawṭiin*; ava/pva *miwaṭṭan*.

اتوطّن *ʔitwaṭṭan* /vi/ **1** passive of *waṭṭan*. **2** to settle, take up residence in a new place. *ʔitwaṭṭanu fi-skindiriyya* they took up residence in Alexandria. **3** to become endemic. *ʔil-bilharsiya twaṭṭanit fi-maṣr[i] min zamaan* bilharziasis became endemic in Egypt a long time ago. -vn *tawaṭṭun*; ava/iva *mitwaṭṭan*.

استوطن *ʔistawṭan* /vt/ **1** to settle, take up residence in a new place. **2** to become endemic. *ʔamraaḍ mustawṭina* endemic diseases. -vn *ʔistiiṭaan↑*; ava *mistawṭan, mustawṭin*; pva *mistawṭan, mustawṭan*.

و ط و ط

وطواط *wiṭwaaṭ, waṭwaaṭ* /n pl *waṭawiiṭ*/ *[zool]* bat. *ɛamliin zayy il-waṭawiiṭ* (they are behaving just like bats) they never come out before dark.

و ط ى

وطى *wiṭi (a)* /vi/ **1** to become low(er), decrease in height. *ʔil-mayya wiṭyit fil-biir* the water (level) in the well has gone down. ‖ *ɛili walla wiṭi* whatever his standing, whatever people say of him. **2** to become quiet(er). *ṣoot-u wiṭi* his voice became quieter. **3** to become low(er) (in pitch). **4** to fall, decrease (statistically). *daragit il-ḥaraara wiṭyit* the temperature fell. **5** to decline, fall (morally, socially etc.). -vn *wiṭiww*; ava *waaṭi*.

واطى *waaṭi* /adj */ **1** low. *mayyit in-niil waṭya fiṣ-ṣeef* the water of the Nile is low in summertime. ‖ *ʔil-ḥuruuf il-waṭya* (1) Arabic letters which dip below the line. (2) lower case letters in the Latin alphabet. *-gaab ɛalii-ha waṭii-ha* he turned everything upside-down, he

upset things completely. - *ʃil-muus fii ɛaali w-waaṭi* the razor blade is dented. - *ma-bi-yḥuṭṭ^{i}-ʃ waaṭi ʃabadan* he never acts humbly. **2** subdued, low. *ḍaṛṭ^{i} waaṭi* low pressure. **3** quiet. *ṣoot waaṭi* a quiet voice. **4** low in pitch. **5** base, inferior. *ʃaxlaaq waṭya* low moral standards. *naas waṭyiin* ill-mannered people.

وطأة *waṭʃa* /n/ pressure, intensity. *ʃil-maraḍ xaffit waṭʃit-u* the illness let up.

وطا *waṭa* /n/ footwear. ‖ *ʃibn il-waṭa* low bastard! - *baɋa ɛaamil zayy il-waṭa* he was reduced to shame-faced silence.

أوطى *ʃawṭa* /el/ lower/lowest.

وطّى *waṭṭa* /vt/ **1** to lower, make low. *waṭṭi ktaaf-ak fiwayya* lower your shoulders a bit. **2** to quieten. *waṭṭi r-radyu* turn down the radio! *waṭṭi ṣoot-ak* lower your voice! **3** to cause to fall (statistically). *ʃid-dawa ḥa-ywaṭṭi ḍ-ḍaṛṭ* the medicine will lower the blood pressure. **4** to cause to decline (morally, socially etc.). *ʃabuu-ya waṭṭaa-ni w-gooz-i ɛallaa-ni* (my father lowered my rank but my husband raised me) I married into a higher class. — /vi/ **5** to bend down. *waṭṭa ɛala-bn-u* he bent over his son. **6** to become lower, go down. *ʃiṭ-ṭayyaara ɛammaala twaṭṭi* the plane is continuing to lose height. **7** to become quiet(er). *ʃir-radyu waṭṭa xaaliṣ* the radio became very faint. - vn *tawṭiyya*; ava/pva *miwaṭṭi*.

اتوطّى *ʃitwaṭṭa* /vi/ passive of *waṭṭa*. - iva *mitwaṭṭi*.

تواطأ، تواطى *tawaaṭaʔ* /vi/ to connive. - vn *tawaaṭuʃ*; ava *mutawaaṭi*.

استوطى *ʃistawṭa* /vt/ **1** to consider (too) low. *ʃistawṭa l-ʃooḍa ma-rḍii-ʃ yiskin fiiha* he wouldn't live in the room because he thought the ceiling too low. **2** to select for lowness. *ʃistawṭa wi-ggawwiz* he selected (a girl) from a lower class and married (her). - vn *ʃistiwṭa*; ava *mistawṭi*.

و ظ ب

أوظب *ʃawẓab* /el/ more/most regular.

واظب *waaẓib, waaẓab* /vi/ to act regularly. *ʃiṭ-ṭaalib ik-kuwayyis bi-ywaaẓib ɛala d-duruus* a good student attends classes regularly. - vn *muwaẓba*; ava *miwaaẓib*.

اتواظب *ʃitwaaẓib* /vi/ (impersonal) passive of *waaẓib*. *ʃid-dawa laazim yitwaaẓib ɛalee* the medicine should be taken regularly. - iva *mitwaaẓib*.

و ظ ف

وظيفة *waẓiifa* /n pl *waẓaayif, waẓaaʃiifʔ*/ **1** employment, job, situation, *ʃiɛlanaat waẓaayif* situations vacant ads. *waẓiifa min ɣeer waẓiifa* a job with no function, sinecure. **2** function. *waẓiifit il-ɛaddaad ʃinnu yiḥsib l-istihlaak* the function of the meter is to keep account of consumption. *ɛilm waẓaaʃif il-ʃaɛḍaaʃ* physiology.

وظيفي *waẓiifiʔ* /adj/ of or pertaining to employment. *ʃis-sillim il-waẓiifi [admin]* the employment scale.

وظّف *waẓẓaf* /vt/ to employ, make use of. *waẓẓaf-ni fiʃ-ʃirka btaɛt-ak* give me employment in your company. *fii ḥaaga maʃmuuna twaẓẓaf fiiha fluus-ak* is there something safe for you to invest your money in? - vn *tawẓiif*; ava/pva *miwaẓẓaf*.

موظّف *muwaẓẓaf* /n */ **1** government official, civil servant. *bukra ʃagaaza l-muwaẓẓafiin il-ḥukuuma* tomorrow is a holiday for government employees. **2** white-collar worker. *ʃabuu-ya muwaẓẓaf fil-bank* my father is a bank employee.

اتوظّف *ʃitwaẓẓaf* /vi/ to obtain employment, especially as a white-collar worker. *baɛḍ^{i} ma txallaṣ taɛliim-ak ḥa-titwaẓẓaf wi-titgawwiz* after you've finished your education you will get a job and get married. - ava *mitwaẓẓaf*.

استوظف *ʃistawẓaf↓* /vi/ to obtain a post or employment. *ruuḥ ʃistawẓaf-lak fi-ʃirka* go find yourself a job with a company. *ʃabuu stawẓaf fi-wzaarit ir-rayy* his father obtained a post with the Ministry of Irrigation. - ava *mistawẓaf*.

مستوظف *mustawẓaf↓* /n */ one who has a job with the government or a company.

و ظ و ظ

وظوظ *waẓwiẓ, waẓwaẓ* /vi/ *[joc slang]* to mature (of a girl), become nubile. *ʃil-bitt^{i} waẓwaẓit marra waḥda* the girl bloomed all of a sudden. ‖ *lamma twaẓwaẓ* ≈ not on your life! - vn *waẓwaẓa*; ava *miwaẓwaẓ*.

وظوظة *waẓwuuẓa* /fem adj, pl *waẓawiiẓ*/ *[joc slang]* voluptuous (of a girl). - /nominally/ *ʃil-waẓawiiẓ* the girls.

و ع ء

see ² و ع ى : *wiɛaaʃ*

و ع ب

استوعب *ʃistawɛab* /vt/ **1** to hold, have room for. *ɛawziin ʃooḍa wasɛa tistawɛib magmuɛaat kibiira* we need a large room that can hold big groups. **2** to comprehend, understand, grasp the meaning of. *ʃistawɛabu d-dars* they mastered the lesson. *ʃistawɛabna n-naksa* we realized the significance of the (1967) defeat (and learnt from it). - vn *ʃistiɛaab*; ava/pva *mistawɛib*.

و ع د

وعد *waɛad (i)* /vt/ **1** to promise. *ʃabuu waɛad-u b-*

ʕarabiyya his father promised him a car. ʔawʕid-ak niqaḍḍi yoom fil-haram I promise you we'll spend a day at the Pyramids. 2 to provide (of God). *rabb-i-na waʕad-ni bil-ḥagg* God has enabled me to make the pilgrimage. ‖*di lil-mawʕudiin miʃ lil-ḥassiiba [prov]* (good fortune is) for those who have it provided by God, and not for those who scheme and plan. - vn *waʕd*; ava *waaʕid*; pva *mawʕuud*.

وعد *waʕd* /n pl *wuʕuud*/ **1** promise. **2** provision (from God). ‖*ya waʕd-i* expression of praise and admiration, as in ʔaxuu-ya ʃtara ʕarabiyya gdiida ya waʕd-i ʕaleeha my brother bought a wonderful new car! - *da waʕd^{i} w-maktuub* it is all predestined (said in times of disaster). - ʔis-saʕd^{i} waʕd good fortune is a gift from God. - *ḥa-tistilaqqa waʕd-ak* you'll get the punishment you deserve.

موعود *mawʕuud* **1** /adj/ prescribed, stipulated. *fil-yoom il-mawʕuud* on the appointed day. **2** /n */ fortunate one. *da min il-mawʕudiin* he's a lucky man.

وعدة *wiʕda* /n pl *-aat*/ commitment, pledge. *kaan fii wiʕda beeni w-beenu* he and I were mutually committed.

وعيد *waʕiid* /n/ wrath. *xaaf min waʕiid rabb-i-na wi-mfi kwayyiś* fear the wrath of God and behave yourself.

موعد *mawʕid*↑ /n pl *mawaʕiid*/ appointed time. ‖*mawaʕiid il-ʕaṭr* train timetable.

ميعاد *maʕaad, miʕaad* /n pl *mawaʕiid*/ **1** appointed time, set time. *ma-bi-yguu-ʃ fi-mawaʕiid if-fuxl il-maẓbuuṭa* they don't come to work on time. *miʕaad il-ɣada ʕarrab* it's nearly lunch time. **2** appointment, engagement. *ʕandi mʕaad is-saaʕa sitta* I have an appointment at six o'clock. *laazim taxdi mʕaad min id-duktuur* you should make an appointment with the doctor. *mawaʕiid-u miʃ maẓbuuṭa* he is not punctual. — *mawaʕiid* /pl n/ **3** timetable, schedule. *mawaʕiid is-sikka l-ḥadiid* the railway timetable.

اتوعد *ʔitwaʕad* /vi/ **1** to be promised. **2** to be granted good fortune. *ʔin ʃa-lla titwiʕid* may you have similar good fortune (said on happy occasions such as a marriage, a visit to Mecca etc.). - iva *mitwiʕid*.

انوعد *ʔinwaʕad* = *ʔitwaʕad*. - iva *minwiʕid*.

اتوعّد *ʔitwaʕʕad* /vt/ to threaten. *ʔil-mudiir itwaʕʕad-u ɣuddaam zumalaat-u* the manager threatened him in the presence of his colleagues. - ava/pva *mitwaʕʕad*.

واعد *waaʕid, waaʕad* /vt/ to make an appointment with, arrange to meet (s.o.). *ʔana ma-waʕidt-ak-ʃ^{i} ʕal-waqt^{i} da* I did not make an appointment with you for this time. - vn *miwaʕda*; ava *miwaaʕid*.

اتواعد *ʔitwaaʕid* /vi/ to make an appointment with one another. - ava *mitwaaʕid*.

أوعد *ʔawʕad* = *waʕad*.

استوعد *ʔistawʕid* /vt/ to threaten. *ʔistawʕid-u b-ʕalqa* he threatened to thump him. - ava *mistawʕid*.

و ع ر

وعورة *wuʕuura*↑ /n/ ruggedness.

واعر *waaʕir* /adj */ *[slang]* rugged, dangerous. *sikka waʕra* a rough road. ‖*raagil waaʕir* unscrupulous man. - *mara waʕra* highly-sexed woman. - *ʕeen-u waʕra* he's an insolent shameless man. - *siniin waʕra* hard times.

استوعر *ʔistawʕar* /vi/ to become wild. - ava *mistawʕar*.

و ع ز

وعز *waʕaz*↑ *(i)* /vi/ to give an intimation. *ʔeeh illi waʕaz-lak bil-fikra di* what put this idea into your head? - ava *waaʕiz*; pva *mawʕuuz*.

أوعز *ʔawʕaz*↑ = *waʕaz*. - vn *ʔiiʕaaz*; ava *muuʕiz*; pva *muuʕaz*.

و ع ظ

وعظ *waʕaẓ (i, a)* /vt/ to give religious instruction to, preach to. *baʕd^{i} ma nismaʕ il-qurʔaan il-waaʕiẓ bi-yiwʕiẓ in-naas* after we have listened to the Koran the preacher preaches to the people. - vn *waʕẓ, waʕaẓaan*; ava *waaʕiẓ*; pva *mawʕuuẓ*.

وعظ *waʕẓ* /n/ sermon, lecture.

وعظة *waʕẓa* /n pl *-aat*/ *[Chr]* homily, sermon.

واعظ *waaʕiẓ* /n pl *wuʕʕaaẓ*/ preacher.

عظة *ʕiẓa*↑ /n pl *-aat*/ sermon, lecture.

موعظة *mawʕiẓa* /n pl *mawaaʕiẓ*/ **1** speech, sermon. **2** sign (from God). *haziimit yunyu kaanit mawʕiẓa min allaah* the June defeat was a lesson from God.

اتوعظ *ʔitwaʕaẓ* /vi/ to be edified, learn a lesson. *ʔismaʕ kalaam ʔabuu-k wi-twiʕiẓ minnu* listen to what your father says and learn from it. - ava/iva *mitwiʕiẓ*.

انوعظ *ʔinwaʕaẓ* = *ʔitwaʕaẓ*. - ava/iva *minwiʕiẓ*.

اتعظ *ʔittaʕaẓ*↑ = *ʔitwaʕaẓ*. - ava/pva *mittiʕiẓ*.

استوعظ *ʔistawʕaẓ*↓ /vi/ to take heed, be taught a good lesson. - ava *mistawʕaẓ*.

و ع ع

وعّ *waʕʕ (i)* /vt/ to vomit. *waʕʕ illi f-baṭn-u* he vomited what was in his stomach. - vn *waʕʕ, waʕaʕaan*; ava *waaʕiʕ*.

وعّ *wiʕʕ* /n/ sound of vomiting. *qaal wiʕʕ* he started to vomit.

و ع ك

وعكة *waʕka* /n pl *-aat*/ mild sickness.

موعوك *mawɛuuk* /adj */ suffering from a mild sickness or indisposition.

اتوعك *ʔitwaɛak* /vi/ to become slightly ill, become indisposed. - ava *mitwiɛik*.

اتوعّك *ʔitwaɛɛak* = *ʔitwaɛak*. - vn *tawaɛɛuk*; ava *mitwiɛik*.

وع وع

وعوع *waɛwaɛ* /vi/ to whimper or snivel out of weakness and cowardice. - vn *waɛwaɛa*; ava *miwaɛwaɛ*.

وعى [1]

وعى *wiɛi (a)* /vi/ **1** to take care. *wiɛi li-fluus-u* he took good care of his money. **2** to take heed, pay attention. *wiɛi lil-kalaam illi tqaal* he took heed of what was said. **3** to (be old enough to) retain a memory (of s.th.). *ʔana m-awɛaa-ʃ ɛal-ḥarb il-ɛaalamiyya t-tanya* I don't remember the Second World War. *ʔana ma-wɛit-ʃ[i] l-gidd-i* I wasn't old enough to know my grandfather. **4** to move away. *wiɛi min gamb iṭ-ṭarabeeza* he moved away from the edge of the table. *ʔiwɛa mis-sikka* get out of the way! *ʔiwɛa kida xalli l-hawa yxuff* move away and let the air come in. - vn *waɛy, waɛayaan*; ava *waaɛi*.

¶ *ʔiwɛa* or *ʔiwɛaa-k* /imper; fem *ʔiwɛi* or *ʔiwɛaa-ki*, pl *ʔiwɛu* or *ʔiwɛaa-ku*/ (1) /w foll imperf of *kaan*/ let it not be that. *ʔiwɛa tikuun ḥa-timʃi* I hope you won't be going away. *ʔiwɛa tkuun ḥaṣalit ḥaaga* I hope that nothing has happened. (2) /with foll verb other than *kaan*/ don't, be careful not to. *ʔiwɛu timʃu min hina* don't leave this place! *ʔiwɛa tɛaddi l-ɛataba* be careful not to cross the threshold. (3) /with no foll verb; *ʔiwɛa, ʔiwɛi, ʔiwɛu* only/ be careful (of)! watch out (for)!. *ʔiwɛa raas-ak* watch your head! *ʔiwɛa t-tiɛbaan* be careful of the snake! *ʔiwɛa l-ɛiyaal* watch out for the kids!

وعى *waɛy* /n/ consciousness, awareness. *ɣaayib ɛan* (or *faaqid*) *il-waɛy* unconscious. *law ɛandaha ʃeeʔ min il-waɛy[i] kaanit tiɛraf titṣarraf ʔizzaay* if she had her wits about her she would know how to behave. ‖*ma-huwwaa-ʃ fi-waɛy-u* he's not in his right mind.

واعى *waaɛi* /adj */ **1** aware, attentive. *ʔil-mulaqqin laazim yikuun waaɛi ʔasnaaʔ ɛarḍ il-masraḥiyya* the prompter must pay close attention during the performance of the play. **2** experienced in the ways of the world. *raagil waaɛi* a man who knows his way around. **3**↓ grown-up (of a child). *walad waaɛi* a big boy.

أوعى *ʔawɛa* /el/ **1** more/most aware or attentive. **2** more/most grown-up.

وعّى *waɛɛa* /vt/ **1** to make aware (especially of danger), caution. *laazim tiwaɛɛi l-waad wi-tfahhim-u* you've got to make the boy aware and explain to him. **2** to indoctrinate. *tawɛiyit il-gamahiir* indoctrinating the masses. - vn *tawɛiyya, tawɛiyaʔ*; ava *miwaɛɛi*.

اتوعّى *ʔitwaɛɛa* /vi/ **1** to be made aware, be cautioned. **2** to be indoctrinated. - iva *mitwaɛɛi*.

استوعى *ʔistawɛa* /vt/ **1** to consider or deem aware. **2**↓ to consider (a child) grown-up. -ava/pva *mistawɛi*.

وعى [2]

وعى *wiɛy* /coll n/ crockery, pots and pans. *baɛd il-ɣada if-faɣɣaala b-tixsil il-wiɛy* after lunch the maid washes the dishes.

وعاية *wiɛaaya, waɛaaya* /n pl *-aat*/ cooking-pot, pan.

وعاء *wiɛaaʔ* /n pl *ʔawɛiya*/ container, receptacle. *ʔil-ʔawɛiya l-limfawiyya* the lymph nodes. *ʔil-ʔawɛiya d-damawiyya* the blood vessels. ‖*wiɛaaʔ ḍariibi* tax bracket.

وغد

وغد *waɣd* /adj pl *ʔawɣaad*/ scoundrelly.

وغر

أوغر *ʔawɣar* /vt/ to provoke to animosity. *ʔeeh illi ʔawɣar ṣadr-ak ɛalee* what caused you to have these bad feelings about him? - ava *miwɣir*; pva *mawɣuur*.

وغ ش see واغ ش: *waaɣiʃ*

وغل

اتوغّل *ʔitwaɣɣil* /vi/ to make progress, advance, make (good) headway. *huwwa twaɣɣil fit-tigaara ḍawi* he got on very well in business. - ava *mitwaɣɣil*.

وغ وش

وغوش *waɣwiʃ, waɣwaʃ* /vt/ to cause to be anxious or doubtful. *kalaam id-duktuur waɣwiʃ-ni xaaliṣ* what the doctor said worried me a great deal. - vn *waɣwaʃa*; ava/pva *miwaɣwiʃ*.

اتوغوش *ʔitwaɣwiʃ* /vi/ to become or be made anxious. - ava/iva *mitwaɣwiʃ*.

وف ء see وف ى: *wafaaʔ*

وف د

وفد *wafad (i)* /vi/ to come from a distance, especially as a delegate or delegation. *bi-yiwfid ɛala maṣr[i] suyyaaḥ kitiir* many tourists come to Egypt. - vn *wafadaan, wufuud*; ava *waafid*.

وافد *waafid* /n */ visitor from abroad. ‖ *ʕidaarit il-waafidiin* office responsible for foreign students in Egypt.

وفد *wafd, wafd* /n pl *wufuud*/ delegation. *wafdⁱ maṣrⁱ fʔ-hayʕit il-ʕumam* Egypt's delegation at the UN. ‖ *ʕil-wafd (il-maṣri)* Egypt's largest political party before the 1952 Revolution.

اتوافد *ʕitwaafid* /vi/ to arrive in number and in succession, come in waves. - ava *mitwaafid*.

أوفد *ʔawfad* /vt/ to send (a delegate). *ʕig-gamʕa ḥa-tiwfid ṭalbeen li-faransa ʕaʃaan yidrisu ʔadab* the university will send two students to France to study literature. *ʔana muufad min ʕand iʃ-ʃirka* I have been sent on behalf of the company. - vn *ʕifaad*; ava *muufid*; pva *muufad*.

و ف ر

وفر *wafr* /n pl *wufuraat*/ savings. *wufuraat il-mizaniyya* unspent balance in the budget. ‖ *ʕummaal wufuraat* workers discharged as redundant.

وفرة *wafra* /n/ abundance. *bi-wafra* abundantly.

أوفر *ʔawfar* /el/ **1** more/most abundant. **2** more/most economical.

وفير *wafiir* /adj */ abundant.

وافر *waafir* /adj */ abundant. *gamaal waafir* great beauty.

وفّر *waffar* /vt/ **1** to save, save up. *waffaru flus-ku w-hatu-lku tilifizyoon* save up your money and buy yourselves a television. ‖ *daftar tawfiir* a post-office savings book. **2** to be sparing with, economize on. *waffar taʕb-ak* spare yourself the trouble. *ʕiʃ-ʃirka ḥa-twaffar xamsiin ʕaamil* the company will economize (by laying off) fifty workers. ‖ *ʕilli ʕandu kilma ywaffar-ha* keep your opinions to yourself! **3** to provide in abundance. *waffarit-lu kullⁱ wasaaʔil ir-raaḥa* she got everything together to make him comfortable. - vn *tawfiir*; ava *miwaffar*.

اتوفّر *ʕitwaffar* /vi/ **1** to become abundant, become plentiful. *ʕiṣ-ṣabuun itwaffar fis-suuq* soap has become freely available on the market. **2** to be saved up. **3** to be economized on. *ʕummaal kitiir itwaffaru* a lot of workers were laid off (as a part of an economy drive). - ava/iva *mitwaffar*.

اتوافر *ʕitwaafar* /vi/ **1** to become abundant. **2** to be fulfilled (of conditions). - vn *tawaafur*↑; ava *mitwaafir, mutawaafir*↑.

و ف ق

وفق *wifq* **1** /n/ accord, harmony, agreement. *ʔahammᵃ ḥaaga fil-gawaaz il-wifqⁱ been is-sittⁱ w-goz-ha* the most important thing in marriage is harmony between the woman and her husband. **2** /prep/ according to. *door il-mudarris bi-yitrayyar wifq iḥtiyagaat iṭ-ṭalaba* the role of the teacher changes according to the needs of the students.

¶ *wifqan*↑ *li-, wufqan li-* in accordance with. *wifqan liṭ-ṭalabaat* in accordance with the requests.

أوفق *ʔawfaq* /el/ more/most appropriate, suitable or harmonious.

وفاق *wifaaq, wifaaq*↑ /n/ concord, harmony. *ma-fii-ʃ wifaaq beenu w-been miraat-u* there is no harmony between him and his wife. *ʕil-wifaaq id-dawli* international détente.

وفّق *waffaq* /vt/ **1** to harmonize, match up. *ʕandi bluuza ʕayza ʔawaffaq laha ʕiʃarb* I have a blouse for which I want to find a matching scarf. ‖ *waffaq raseen fil-ḥalaal* to arrange a marriage, make a (marital) match. - *ma-gamaʕ ʕilla-mma waffaq [prov]* ≈ birds of a feather flock together. **2** to grant success to. *rabb-i-na waffaq-ni fil-imtiḥaan bi-ʃakl* God granted me a great success in the exam. *wa-ma-tawfiiq-i ʕilla bi-llaah* I can only succeed with God's help. -/the literary passive occurs/ *wuffiq fi-ʕamal-u* he was successful in his work. **3** *[mus]* to tune (instruments of an orchestra) to a given pitch. - vn *tawfiiq*; ava/pva *miwaffaq*.

¶ *waffaq been* to make peace between. *law ḥawilt*ⁱ *twaffaq benhum ḥa-tiṣbaḥ ʕinta l-ʕadiww* if you were to try to make peace between them you would become the enemy.

التوفيقيّة *ʕit-tawfiqiyya* /prop n/ district of central Cairo, between Midan el-Tawfiqiya and Ramses Street, renowned for its fruit, vegetable and meat market.

توافيق *tawafiiq*↑ /pl n/ mathematical combinations.

اتوفّق *ʕitwaffaq* /vi/ **1** to agree together. **2** to be brought into agreement. - ava/iva *mitwaffaq*.

وافق *waafiq* **1** /vi/ to agree, consent. *ʔahammᵃ ḥaaga hiyya ʕinnⁱ ʔabuu-ha ywaafiq ʕal-gawaaz* the most important thing is that her father should agree to the marriage. *ʕil-miwaafiq yirfaʕ ʕiid-u* whoever agrees, raise his hand! **2** /vt/ to suit, be agreeable to. *ʕixtaar ʔayyⁱ qaṭrⁱ ywafq-ak in-nahar-da* choose whichever train suits you best today. *ma-b-yiʕmil-ʃ illa lli ywafq-u* he only does what he feels like doing. ‖ *ʕil-ḥadd ig-gaay yiwaafiq ʕaʃara maaris* next Sunday is the tenth of March. - vn *muwafqa*; ava *miwaafiq*.

موافقة *muwafqa* /n pl *-aat*/ approval, authorization. *ma-ʕad-ʃⁱ lazim-na muwafqit il-ḥukuuma qablⁱ ma nsaafir* we no longer need government authorization before we can go abroad.

اتوافق ʃitwaafiq /vi/ (impersonal) passive of *waafiq* 1. *ʃil-mawḍuuɛ itwaafiq ɛalee* the matter has been approved. -iva *mitwaafiq*.

توافق *tawaafuq↑, tawaafuq↑* /n/ co-ordination, harmony, congruity, concord. *ʃit-tawaafuq il-ɛaḍali il-ɛaṣabi* muscular-nervous co-ordination.

توافقى *tawaafuqi↑* /adj */ *[mus]* harmonic. *ʃin-nayamaat it-tawaafuqiyya* harmonics.

اتّفق ʃittafaq /vi/ to agree, come to an agreement. *ʃittafaqt^{i} maɛa ṣaaḥib il-ɛarabiyya ɛat-taman* I came to an agreement on the price with the owner of the car. ‖*dool mittifqiin maɛa baɛḍ* they are in league together. -vn *ʃittifaaq*; ava *mittifiq*; pva *muttafaq*.

¶ *ḥasab ma yittifiq* haphazardly, irregularly. *bi-nrawwaḥ il-beet ḥasab ma yittifiq* we go home at no fixed time.

اتّفاق ʃittifaaq /n pl *-aat*/ agreement. *tamm il-ittifaaq ɛala xuṭuubit il-bint^{i} li-bn^{a} ɛamm-a-ha* the girl's engagement to her cousin was agreed upon. ‖*ḥallit l-ittifaaq* (the pot of) food which the bride and groom eat together privately on the night of the *duxla* (q.v.).

اتّفاقيّة ʃittifaqiyya /n pl *-aat*/ agreement.

و ف ى

وفى *wafa (i)* /vi/ to act faithfully, be reliable. *wafit-lu l-ʃaaxir laḥẓa* she was faithful to him until the very last. *laazim tiwfi b-waɛd-ak* you must fulfil your promise. -vn *wafa, wafaaʃ↑*; ava *waafi*.

وفاء *wafaaʃ* /n/ loyalty, faithfulness. ‖*wafaaʃ in-niil [obsol]* the inundation of the Nile to a height considered adequate for the fulfilment of agricultural needs.

وافى *waafi* /adj/ abundant, copious, generous. *gism^{i} waafi* large well-built body. *mizaan waafi* full weight and more.

وفى *wafi* /adj */ faithful. *da xill^{i} wafi* there's a faithful friend.

أوفى ʃawfa /el/ 1 more/most faithful. 2 more/most copious, generous or abundant.

وفاة *wafaah* /n pl *wafiyyaat, wafayaat*/ death (usually by natural causes). *daftar il-wafayaat* register of deaths. *ṣafḥit il-wafiyyaat* the obituary page (in a newspaper).

وفّى *waffa* /vt/ 1 to give in full. *waffii-ni ḥaqq-i* give me all my rights. 2 to fulfil, complete. *waffa b-waɛd-u* he kept his promise. *waffa n-nadr* he fulfilled his vow. *waffa muddit is-sign* he served the prison term. -vn *tawfiyya*; ava/pva *miwaffi*.

اتوفّى ʃitwaffa /vi/ to die. *ʃitwaffa l-raḥmit illaah* he passed away to the mercy of God. -ava *mitwaffi*.

متوفّى *mitwaffi, mutawaffi↑* /n */ deceased.

وافى *waafa* 1 /vt/ to make a delivery to. *ḥa-nwafii-kum bil-mablaɣ da* we will hand over this sum to you. 2 /vi/ to approximate. *waafa ɛas-sittiin* he nearly reached sixty (years of age). -ava *miwaafi*.

استوفى ʃistawfa /vt/ 1 to fill in (details on a form). *laazim tiftiri ʃistimaara w-tistawfi kull il-bayanaat il-lazma* you must buy a form and fill in all the necessary information. ‖*ʃawiif l-istiifa* desk sergeant (in the police). 2 to be exhaustive of, be complete in. *ʃakl^{i} mistawfi kull il-ɛanaaṣir il-lazma* food containing all essential elements. 3 to exact or obtain in full. *ʃistawfa ʃawraaq-u* he obtained all the papers he required. *lamma tistawfi dyuun-ak* when you collect all your debts. -vn *ʃistiifa, ʃistiifaaʃ↑*; ava/pva *mistawfi, mustawfi↑*; pva *mustawfa↑*.

و ق ا ر

وقار *waqaar* /coll n/ sea bass, grouper(s).

وقارة *waqaara* /unit n, pl *-aat*/ a sea bass, a grouper.

و ق ت

وقت *waqt* /n pl *ʃawqaat*/ 1 time, period of time, time span. *ʃin-naṣr^{i} mas ʃalit waqt* victory is a matter of time. *ʃarxaṣ ḥaaga ɛandina l-waqt* the cheapest thing in our view is time. *ma-ɛandinaa-ʃ waqt* we haven't (enough) time. *maɛa l-waqt* in due time. *waqt il-faraaɣ* free time, leisure. 2 point in time, moment. *waqt iṣ-ṣala* time of prayer. *kull^{i} waqt^{i} w-lu ʃadaan [prov]* there is a (different) call for each prayer ≈ times change. *fi-nafs il-waqt* or *fil-waqt^{i} nafs-u* at the same time, simultaneously. *ga ʃ-waqt-u* he came at just the right moment. *ga qabl^{i} waqt-u* he came prematurely. *laqeet il-waqt^{i} miʃ munaasib* I found it an inconvenient time. *fii ʃawqaat bi-tiigi ɛalayya w-ʃana b-aḥiss^{i} bit-taɛab* there are times when I feel great weariness. -/prepositionally/ *waqt il-ɣaara n-naas bi-tigri lil-maxaabiʃ* when an air raid takes place people run to the shelters.

¶ *ʃawqaat* /adv/ sometimes. *ʃawqaat ... ʃawqaat* at times ... at others. -*waqt-a-ha* /adv/ then, at that time. -*dilwaqti* and *ʃil-waqti* /adv/ now, as in *ʃana lissa gayy^{i} dilwaqti* I came just now, *ʃiɛmil-u dilwaqti* do it immediately!

ميقات *miqaat* /n pl *mawaqiit, mawaqiit*/ 1 appointed time, set time. *mawaqiit iṣ-ṣala* the times of prayer. 2 point, outside the Mecca area, at or before which arriving pilgrims should don the *ʃiḥraam* (q.v.). — *mawaqiit* /pl n/ 3 times of arrival and departure, timetable, schedule.

ميقاتى *miqaati* 1 /adj/ pertaining to timekeeping. *saaɛa*

miqatiyya time-clock. **2** /n pl *-yya/ [obsol]* timekeeper.
وقّت *waqqat* /vt/ to time, schedule. *waqqatna kull^{i} taḥarrukat-na fir-riḥla* we timed everything we would (need to) do on the journey. - vn *tawqiit*; ava/pva *miwaqqat*.
توقيت *tawqiit* /n/ timekeeping. *tawqiit ṣeefi* summer time. *tawqiit maḥalli* local time. *tawqiit giriniṭ* Greenwich mean time.
توقيتي *tawqiiti* /adj */ of or pertaining to timing or timekeeping. ‖*saaʕa tawqiitiyya* stop-watch.
موقّت *muwaqqat, muʃaqqat*$^{↑}$ /adj/ temporary, short-term. *ruxṣa muwaqqata* temporary licence. *bi-ṣifa* (or *bi-ṣuura) muʃaqqata* temporarily.
¶ *muwaqqatan, muʃaqqatan*$^{↑}$ /adv/ temporarily.
اتوقّت *ʃitwaqqat* /vi/ to be timed, be scheduled. - iva *mitwaqqat*.

و ق ح
وقح *waqiḥ, waqiḥ* /adj * and pl *wuqaḥaaʃ*$^{↑}$/ impudent, impertinent, insolent. *walad waqiḥ* a rude boy.
وقاحة *waqaaḥa* /n/ impertinence, impudence. *ʃamma-nta waqiḥ waqaaḥa* your rudeness is incredible.
اتواقح *ʃitwaaqiḥ*$^{↑}$ /vi/ to act insolently. *ṭuul in-nahaar yitwaaqiḥ ʕala r-raayiḥ wig-gaay* he is being rude to everybody all day long. - ava *mitwaaqiḥ*.

و ق د see also ق.ى د^{2}
وقود *wuquud, waquud*$^{↑}$ /coll n/ fuel(s). *ʃil-waquud iz-zarri* atomic fuel.
وقيد *waqiid* /n/ wood, straw, dung etc. used as fuel.
وقّاد *waqqaad* /n */ fireman (in a locomotive), stoker.
موقد *mawqad* /n pl *mawaqiid*/ *[rur]* metal or earthenware brazier used for heating (see Pl.A, 6).
مستوقد *mustawqad* /n/ **1** furnace for heating a public bath. **2** metal frame which holds an *qidra* over the flame.
أوقد *ʃawqad*$^{↑}$ /vt/ to kindle, light (a fire).

و ق ر^{1}
وقار *waqaar* /n/ serenity, dignity.
وقور *waquur*$^{↑}$ /adj */ dignified, respectable. *feex waquur* a dignified old man.
موقّر *muwaqqar* /adj */ respectable.

و ق ر^{2} see و ق ا ر: *waqaar, waqaara*

و ق ع
وقع *wiqiʕ, waqaʕ (yuqaʕ, yuuqaʕ, yiwqaʕ)* /vi/ **1** to fall, fall down. *ʃiknis iz-zibaala lli wiqʕit min iṣ-ṣafiiḥa* sweep up the garbage that fell out of the rubbish bin. *qabl in-naar ma ṭṭaffit is-sillim wiqiʕ* before the fire was extinguished the stairs collapsed. *ḥ-awqaʕ min ṭuul-i* I am about to collapse. *ʃiṭ-ṭabaq wiqiʕ minnu* he dropped the plate. *wiqiʕt^{i} mis-sama wi-nta stilaqqet-ni* ≈ you are the very person who can help me out. *ʃinta wqiʕt^{i} walla l-hawa ramaa-k* ≈ whatever landed you in this mess? *lamma l-baqara tuqaʕ tiktar sakakin-ha [prov]* ≈ people rush to take advantage of anyone in a position of weakness. *ʃilli wiqiʕ yiṣṣallaḥ [prov]* ≈ nothing is so bad it can't be put right. ‖*yimiin-u wiqiʕ* his oath was violated. - *wiqiʕ il-ʃarḍ* to fail, as in *ʃiʃ-ʃeex sarḥaan ḥigaab-u ma-yuqaʕ-ʃ il-ʃarḍ* Sheikh Sirhan's talismans never fail, *ʃana kalaam-i ma-yuqaʕ-ʃ il-ʃarḍ* what I say goes. - *wiqʕit fi-ʕarḍ-u* she threw herself on his mercy. - *misiir-ak tuqaʕ fi-ʃiid il-buliiṣ* one day you will fall into the hands of the police. - *wiqiʕt^{i} wala ḥadd^{i}-ʃ samma ʕaleek* ≈ you are down and out and no one will help you. - *ma-yuqaʕ ʃilla ʃ-ʃaaṭir* (only the clever man falls) ≈ it happens to the best of us. - *wiqiʕt^{i} f-maṭabb* I got into a sticky situation. - *qalb-a-ha wiqiʕ fi-riglee-ha* she was scared stiff. - *qalb-i wiqiʕ (miguuʕ)* I'm starved! - *ʃir-raagil da yuqaʕ wāaqif* that's a very resourceful man. - *wiqʕit-lu* she yielded to his advances. **2** to occur, happen. *wiqiʕ il-maqduur* that which was fated took place. *muṣiiba wiqʕit ʕala dmaʏ-na* misfortune befell us. *mumkin il-ḥarb^{i} tuqaʕ fi-ʃayy^{i} laḥẓa* war could break out at any moment. **3** to mount (of a male animal). *ʃig-gamal wiqiʕ ʕaleeha* the camel mated with her (the female). - vn *waqʕa, wuquuʕ*; ava *waaqiʕ*.
¶ *wiqiʕ fi-* (1) to become embroiled in, become entangled in, as in *ʃin-naas firḥit lamma wqiʕt^{i} fil-qaḍiyya* people were glad when I got mixed up in the case, *wiqiʕ fil-ɣalaṭ* he made a mistake, *yiʕmiluu-ha ṣ-ṣuʏaar wi-yuqaʕ fiiha k-kubaar [prov]* the young start them (i.e. fights among themselves) but the adults (i.e. the parents) get dragged into them, *wiqiʕ fi-farr^{i} ʃaʕmaal-u* ≈ he was hoist by his own petard, *wiqiʕt^{i} fik-kalaam* I said more than I intended. (2) to suffer as a result of bad judgement, as in *wiqiʕna fid-duktuur* we were disappointed in the doctor we chose to consult, *wiqiʕt^{i} fil-beeʕa* I made a bad business deal. (3) to fight with, as in *ʃir-rukkaab wiqʕu f-baʕḍ* the passengers set about each other.
وقعة *waqʕa* /n pl *-aat*/ affair, occurrence. ‖*ya waqʕa sooda* and *ya waqʕit-.. [women]* oh what a terrible thing to happen, as in *ya waqʕit-u* what a terrible thing happened to him! - *waqʕit-ha kaanit ḥilwa* she married well. - *waqʕa ẓuḥal* (1) a bad deal. (2) a bad business.

واقع *waaqiɛ, waaqiɛ* /n/ reality. *ʕinti laazim tiɛiifi fil-waaqiɛ* you should be more practical. ‖ *ʕil-ʕamr il-waaqiɛ* fait accompli. - *min waaqiɛ* on the basis of, as in *bi-yuḥkumu ɛal-muraʃʃaḥ min waaqiɛ ṣilat-hum il-xuṣuṣiyya bii* they judge the candidate on the basis of their own personal relations with him. - *fil-waaqiɛ* as a matter of fact, as in *ʕil-bint' di gamiila xaaliṣ fil-waaqiɛ* this girl is indeed very pretty.

واقعي *waaqiɛi* /adj */ realistic, real.

واقعيّة *waaqiɛiyya* /n/ realism, reality. ***bi-yitṣarraf bi-waaqiɛiyya*** he acts realistically.

وقع *waqɛ↑* /n/ effect, impression. ***kalam-ha lu waqɛ' gamiil fi-wdaan-i*** her words sound impressive to my ears. *ʕil-ɛamla di kaan laha waqɛ' wiḥif ɛand' ʕabuu* this incident had a bad effect on his father.

واقعة *waqɛa↑* /n pl *waqaaʕiɛ*/ **1** accident, event, happening. *leeh ma-ballaɤtuu-ʃ ɛan il-waqɛa saaɛit ma ḥaṣalit* why did you not report the incident when it happened? — *waqaaʕiɛ* /pl n/ **2** facts (of a subject, matter or story). **3** minutes (of a meeting). *laazim tisaggil waqaaʕiɛ ig-galsa* you should write down the minutes of the meeting.

أوقع *ʕawqaɛ* /el/ more/most appropriate.

وقيع *wiqiiɛ* /adj invar/ pertaining to an animal, or the meat of an animal, slaughtered owing to illness or injury and used for food.

وقيعة *waqiiɛa, waqiiɛa↑* /n/ incitement (of people against each other).

موقع *mawqiɛ, mawqiɛ* /n pl *mawaaqiɛ, mawaaqiɛ*/ **1** site, location. *ʕil-muhandis ḥaddid il-mawqiɛ* the architect marked off the (building) site. **2** position, situation. *b-yitkallim min mawqiɛ il-masʕuliyya* he speaks from a position of responsibility.

وقّع *waqqaɛ'* /vt/ **1** to cause to fall. *ḥaasib da-nta ḥa-twaqqaɛ iṣ-ṣuḥuun min ʕiid-i* watch out! you'll make me drop the dishes! ‖ *ʕinta waqqaɛt' qalb-i* you really gave me a fright! - *waqqaɛ yimiin-u* he broke his oath. - *ʕinta ḥa-twaqqaɛ kalaam-i fil-ʕarḍ* will you ignore what I said? - *ʕinta ɛaayiz tiwaqqaɛ-na f-baɛḍ' walla ʕeeh* do you want to set us against each other or what? **2** to mislead, cause to make an error. *ʕana waqqaɛt-a-ha fik-kalaam bil-ʕasʕila btaɛt-i* I tripped her up with my questions. **3** to do (s.th.) forcefully and rapidly. *waqqaɛ id-diḥk* he burst into laughter. *waqqaɛt' fii ḍ-ḍarb* I rained blows on him. — /vi/ **4** to cause enmity, create divisions (between people). *ʕis-sitt il-ɛaqraba di bi-tḥibb' twaṣṣal kalaam wi-twaqqaɛ been in-naas* this malicious woman loves to spread gossip and cause trouble between people. - vn *tawqiiɛ*; ava/pva *miwaqqaɛ*.

وقّع *waqqaɛ²*, *waqqaɛ↑* /vi/ to put a signature. *tismaḥ tiwaqqaɛ hina* would you please sign here? - vn *tawqiiɛ, tawqiiɛ*; ava *miwaqqaɛ, muwaqqiɛ*; pva *miwaqqaɛ, muwaqqaɛ*.

توقيع *tawqiiɛ, tawqiiɛ↑* /n pl -*aat*/ signature. *biṭaaqit it-tawqiiɛ [bank]* card for verifying one's signature.

اتوقّع *ʕitwaqqaɛ* /vi/ **1** to be dropped, be knocked down. ‖ *ʕana b-atwaqqaɛ fi-ɛarḍ-ak* I plead with you. **2** to be misled, be tricked. **3** to be talked into a state of animosity (towards s.o.). — **(also** *ʕitwaqqaɛ↑***)** /vt/ **4** to expect. *ʕitwaqqaɛ ʕaswaʕ l-iḥtimalaat* he feared the worst. **5** *[geog]* to be scaled down (on a map). *yitwaqqaɛ miqyaas waaḥid ɛala ʕalf* it is scaled down to one in a thousand. - ava *mitwaqqaɛ*.

إيقاع *ʕiqaaɛ* /n pl -*aat*/ rhythm. *ɀabṭ il-ʕiqaaɛ* setting the tempo.

إيقاعي *ʕiqaaɛi* /adj/ rhythmic, rhythmical. *ʕil-ʕalaat il-ʕiqaɛiyya* rhythm instruments.

و ق ف

وقف *wiqif (yuqaf, yiwqaf, yuuqaf)* /vi/ **1** to come to a stop, halt, pause. *miʃ qaadir ʕaqaf - ma-ɛandii-ʃ faraamil* I can't stop, I have no brakes. *ʕil-beeɛ wiqif* selling has stopped. *ʕid-damm' wiqif* the bleeding stopped. ‖ *ʕil-ḥaal wiqif* business is bad. - *rigl-i wiqfit xaaliṣ* my leg is numb. - *muxx-i wiqif* I can't think any more. - *ʕil-luqma wiqfit ɛala qalb-i* I have heartburn. - *damm-u waaqif* he's a drag. - *ʕiid-u waqfa* he's a poor worker. **2** to stand, stand up. *min faḍl-ak ma-tuqaf-ʃ* don't stand up, please. *waqfiin hina b-tiɛmilu ʕeeh* what are you standing here for? *zibb-u wiqif [coarse]* his penis became erect. *laazim tuqaf ɛala riglee-k* you must stand on your own two feet. *faɛr' raas-i wiqif* my hair stood on end. ‖ *wiqif ɛala ʕiid...* to stand over, watch constantly, as in *ʕin ma-kan-ʃ il-waaḥid yuqaf ɛala ʕideen il-ɛummaal iʃ-fuɤl' ma-yitɛimil-ʃ* if one does not breathe down the workers' necks, the work never gets done. - *ɛal-waaqif* hurriedly, without bothering to sit down, as in *kal ɛal-waaqif* he had a quick snack. - *ʕil-wuquuf fil-ɤariiq* treading water. - *ʕil-wuquuf ɛala l-ʕiid* hand-stand. - *mamnuuɛ il-wuquuf* no parking. - *wiqif mawqif* to adopt an attitude, take a stand, as in *bi-yuqaf mil-ḥayaah mawqif salbi* he has a negative attitude towards life. - vn *wuquuf*; ava *waaqif*.

¶ *wiqif maɛa* to stand up for, support. *wiqif maɛaaya waqt iz-zanqa* he stood by me in a time of need. - *wiqif li-* to be on guard against. *ḥ-aqaf-lu bil-mirṣaad* ≈ I shall be on the watch for any mistakes he may make. - *wiqif fi-wiff* to resist (s.o.). *ma-fii-ʃ ḥaaga tuqaf fi-wiff-*

u-hum there's nothing that can stand against them. - *wiqif ḍidd* to resist, stand against. - *wiqif ɛala* to cost (s.o.) (after a business transaction). *ʃil-beet wiqif ɛaleek bi-kaam* how much did the house cost you? *ʃil-beeɛa di tuqaf ɛalayya b-xusaara* this sale represents a loss for me.

وقف *waqaf (yiwqif)* /vt/ **1** to suspend, put a stop to. *miin qal-lak tiwqif if-fuxl* who told you to stop the work? *ga l-muhandis waqaf-ni ɛan il-ɛamal* the engineer came and suspended me from work. ‖ *ʃintu bass[i] ma-fii-ʃ ḥawaleeku lla waqf il-ḥaal* the only thing you can cause here is trouble. - *ḥukm[i] maɛa waqf[i] t-tanfiiz [leg]* suspended sentence. **2** to endow (property). *zamaan kaan fii naas kitiir tiwqif ʃaraaḍi lil-ʃazhar* in the past many people used to place land in trust for el-Azhar. *ʃil-ḥukuuma laɣit niẓaam il-waqf* the government abolished the *waqf* system. - vn *waqf, waqafaan*; ava *waaqif*; pva *mawquuf*.

وقف *waqf, waqf* /n pl *ʃawqaaf, ʃawqaaf*/ property placed in a religious trust. *wizaarit il-ʃawqaaf* the ministry responsible for (Muslim) charitable endowments (and in the past for property placed in trusts for members of a family). *waqf[i] xayri* endowment for charitable purposes. *waqf[i] ʃahli* endowment for members of a family.

وقفة *waqfa* /n pl *-aat*/ **1** position, stance. *ʃil-ɛaskari k-kuwayyis yibaan min waqfit-u* you can tell a good policeman by his stance. — *ʃil-waqfa* **2** ritual stand on Mt. Arafat during the pilgrimage. **3** (also *yoom il-waqfa*) eve of a feast.

وقفيّة *waqfiyya* /n pl *-aat*/ deed of an endowment.

موقف *mawqif* /n pl *mawaaqif*/ **1** (also *mawqaf*) stopping place, stand. *mawqif it-taksiyaat* taxi rank. **2** (also *mawqif*, pl *mawaaqif*) **2a** position, opinion, attitude. *ʃiza ʃaṣarr[i] waaḥid min it-ṭarafeen ɛala mawqif-u yibqa ma-fii-ʃ ḥall* if one of the parties to the dispute insists on his position, it means there is no solution. **2b** situation. *ʃil-mawqif is-siyaasi tɣayyar* the political situation has changed.

أوقف *ʃitwaqaf* /vi/ to be suspended, be discontinued. - iva *mitwiqif*.

انوقف *ʃinwaqaf = ʃitwaqaf*. - iva *minwiqif*.

وقّف *waqqaf* /vt/ **1** to stop, bring to a halt. *ʃilli yiqdar yiwaqqaf taks[i] ywaqqaf-u* will anyone who can (please) stop a taxi. *laazim tiwaqqaf id-damm* you must stop the bleeding. *rabb-i-na ywaqqaf-lak wilaad il-ḥalaal* ≈ may God send good people to help you. **2** to desist from, discontinue. *ʃana ɛayza ʃawaqqaf il-burfaam* I want to stop taking the pills. **3** to set up, cause to stand. *ʃis-sitt[i] wiqɛit min ṭul-ha w-ʃana waqqaft-a-ha* the woman fell down and I helped her up. *ʃaxiiran qidirt[i] ʃawaqqaf-u ɛala riglee* eventually I got him to stand on his own two feet. ‖ *ʃana waqqaft-u-hum ɛala rigl[i] waḥda* I had them on tenterhooks. **4** to cause to wait. *mif ɛaayiz ʃawaqqaf-ak kitiir* I don't want to keep you waiting long. — /vi/ **5** to come to a halt, come to a standstill. *ʃana ḥ-awaqqaf hina wi-ntu tinzilu* I will stop here and you get off. *waqqaf hina ya-sṭa* stop here, driver! - vn *tawqiif*; ava/pva *miwaqqaf*.

اتوقّف *ʃitwaqqaf* /vi/ **1** to depend, be contingent. *ʃiḥna ɛandina t-tarqiyya titwaqqaf ɛala f-fuxl* promotion for us depends on the (quality of) work. **2** passive of *waqqaf*. - vn *tawaqquf*; ava/iva *mitwaqqif, mitwaqqaf*.

أوقف *ʃawqaf*, *ʃawqaf = waqaf*. - vn *ʃiiqaaf*; ava *muuqif*; pva *muuqaf*.

استوقف *ʃistawqaf, ʃistawqaf* /vt/ to arrest, attract (the attention). *ma-fii-ʃ ḥaaga stawqafit naẓar-ak wi-nta faayit* wasn't there anything that attracted your attention while you were passing? - ava *mistawqaf, mustawqif*.

و ق ق

وقّة، أقّة *wiqqa* /n pl *-aat, wiqaq*/ *[obsol]* oka, unit of weight equal to 1.248 kg.

[1] و ق و ق see **و ا ق**: *waaq il-waaq, waaq il-waaq*

[2] و ق وِ ق see **و ء و ء**: *waqwaq*

[1] و ق ى see also **[1] ت ق ى**

وقاية *wiqaaya, wiqaaya* /n/ protection, safeguard. *ʃil-wiqaaya ʃaḥsan min il-ɛilaag [prov]* prevention is better than cure.

واقى *waaqi, waaqi* /adj/ protective. *balṭu waaqi mil-maṭar* waterproof coat.

[2] و ق ى

وقيّة، أوقيّة *wiqiyya* /n pl *-aat*/ ounce, unit of weight equal to 37 grams.

و ك ء see **ت ك ى**: *takkaaya, ʃittaka, ʃittakka*

و ك ب

موكب *mawkib* /n pl *mawaakib*/ procession, parade.

واكب *waakib* /vt/ to keep up with. *mumkin il-balad tiwaakib surɛit il-ɛilm* it is possible for the country to keep up with the pace of science. - vn *miwakba*; ava *miwaakib*.

و ك ر

وكر *wakr* /n pl *ʕawkaar*/ **1** nest, bird's nest. **2** hideout. *wakr[a] ḥaramiyya* den of thieves.

و ك س

وكس *wakas (i)* /vt/ *[slang]* to thwart (s.o.), cause (s.o.) a setback. - vn *waksa, wakasaan*; ava *waakis*; pva *mawkuus*.

وكسة *waksa* /n pl *-aat*/ *[slang]* misfortune. ‖*ya-di l-waksa [women]* what a misfortune! - *da waksa* he's a failure.

اتوكس *ʕitwakas* /vi/ *[slang]* to be thwarted. - iva *mitwikis*.

انوكس *ʕinwakas* = *ʕitwakas*. - iva *minwikis*.

و ك ل [1]

وكل *wakalˀ (yakil)* /vt/ to delegate, entrust (to s.o.). *ʕiza kunt[a] ḥa-takil ʕilayya ʕidaarit ʕaʒmaal-ak yibqa laazim tisib-ni ʕatṣarraf bi-ḥurriyya* if you are going to charge me with managing your affairs, you must let me act freely. - ava *waakil*; pva *mawkuul*.

وكالة *wikaala* /n/ **1** *[leg]* proxy, power of attorney. *ʕitgawwiz-ha bil-wikaala* he married her by proxy. **2** *[admin]* deputyship. — /pl *-aat*/ **3** agency. *wikaalit ʕanbaaʕ* news agency. ‖*wikaalit il-balaḥ* scrap metal market in Boulak. **4** /also pl *wakaayil*/ *[obsol]* caravanserai. ‖*hiyya wkaala min ɣeer bawwaab* (is this an inn with no doorkeeper?) you should ask permission before coming in. - *wikaalit ḥimiir [obsol]* a stable where riding animals could be left for a fee.

وكيل *wakiil* /n pl *wukala*/ **1** representative, agent. *kaan wakiil il-ʕaruusa ʕabuu-ha* the bride's proxy was her father. *miin wakiil marsiidis fi-maṣr* who is the Mercedes agent in Cairo? *wakiil in-niyaaba* attorney of the department of public prosecutions. ‖*wakiil muḥaami* lawyer's clerk. - *ʕallaah wakiil* God is my witness! **2** assistant, vice-. *wakiil wizaara* under-secretary of state. *wakiil il-ʕamiid* or *wakiil ik-kulliyya* assistant dean (in a university).

تكال *tukaal* /n/ dependence. *ʕult il-ḥaʔʔ[i] wit-tukaal ʕala llaah* I have spoken the truth, and trust in God (to protect me from the consequences). *xalli tukaal-ak ʕalee* depend on Him only.

تواكل *tawaakul* /n/ heedlessness, freedom from care.

وكّل *wakkil*[2], *wakkal* /vt/ to engage, appoint (s.o.) as an agent. *ʕiza rafaʕit ʕaleek ʔaḍiyya laazim tiwakkil muḥaami* if she takes you to court, you should hire a lawyer. - vn *tawkiil*; ava *muwakkil*; pva *muwakkal*.

توكيل *tawkiil* /n pl *-aat*/ **1** agency, franchise. **2** power of attorney. *tawkiil rasmi [leg]* power of attorney which is legalized in the registration office.

موكّل *muwakkil* /n */ *[leg]* client.

اتوكل *ʕitwakkil*[2] /vi/ **1** to put one's trust (in God), entrust one's fate (to God). ‖*ʕitwakkil (ʕala llaah)* go! go away! - *ʕana ḥ-atwakkil baʔa* I'm leaving now. - *ʕiʕmil-ha wi-twákkil* (do your duty first and then leave everything to God) ≈ God helps those who help themselves. **2** to be appointed as an agent. **3** *[joc]* to die, pass away. - ava/iva *mitwakkil*.

اتّكل *ʕittakal* /vi/ to put one's trust (in s.o.), entrust one's fate (to s.o.). *ʕittikil ʕala llaah* put your faith in God (also a reply to beggars). *ʕittikil ʕala nafs-ak* be self-reliant. ‖*ʕilli yittikil ʕaleeku yittikil ʕala llaah* (he who depends on you might as well depend on God) ≈ you are useless. - vn *ʕittikaal*; ava *mittikil*.

و ك ل [2] see ء ك ل: *ʕawkal, wakkil*[1], *ʕitwakkil*[1]

و ل ا

ولا *wala* /conj/ **1** but not, rather than. *ʕin-naar wala l-ʕaar* (give me) hellfire rather than disgrace. **2** /preceded by neg/ and not, nor. *ʕibn-i miʃ ʕaayiz yaakul wala yiʃrab* my son will neither eat nor drink. *laa ʕinta ḥabiib-i wala ṣaḥb-i* you're not my sweetheart and not my friend. *ma-fii-ʃ niẓaam wala ḥaaga* there's no organization or anything. — /particle negating the extreme case of something more generally implied/ **3** not even. *ma xadt[i]-ʃ wala ʔirʃ* I didn't get even a piastre. *wala ḥ-axallii-k tiʃuuf-u* I won't even let you see him. **4** surpassing even .... *ʕanduhum fis-sudaan ʕaɣaani wala ʕaɣaani ʕumm" kalsuum* in the Sudan they have songs even better than those of Umm Kalthum. *muḥaami wala kull il-muḥamiyya fil-balad* the best of all the lawyers in town.

و ل د

ولد *wilid (i)* **1** /vi/ to give birth. *fii sittaat bi-yiwlidu fil-mustaʃfayaat* some women give birth in hospital. **2** /vt/ to bear (young). *ʕil-ʔuṭṭa wildit talaata* the cat had three (kittens). - vn *wilaada*; ava *waalid*; pva *mawluud*.

ولادة *wilaada* /n/ childbirth, confinement, delivery. *ʔism il-wilaada* the maternity ward. *kaanit wilaada ṭabiʕiyya* it was a normal delivery. *wilaada ʕisra* a difficult delivery.

والد *waalid* /n/ father (in polite usage). *ʕil-xaal waalid [prov]* the maternal uncle is like one's father. ‖*ya wald-i* affectionate form of address to an elderly man.

¶ *ʕil-waldeen* /dual n/ parents.

والدة *walda*[1] /n pl *walidaat, waldaat/* mother (in polite usage, cf. *ʕumm*).

مولود *mawluud* /n pl *mawaliid/* infant, new-born child. *ʕiḫna gayyiin nifuuf il-mawluud* we've come to see the baby. *kull*[i] *mawluudin walad [prov]* every son of man is (and can be addressed as) a boy ≈ man has no grounds to be proud. ‖ *huwwa min mawaliid sanat xamsa w-sittiin* he was born in '65.

ولدة *walda*[2] /n pl *-aat/* a birth, a delivery. *wildit walda waḫda* she gave birth once.

ولد *wild* /coll n/ offspring. *wild il-ɛamm*↓ paternal cousins. *ya baani f-ɣeer milk-ak ya mrabbi f-ɣeer wild-ak [prov]* (if you build on another's property, you are like one who raises another's children) ≈ you will not profit from your labour. *ʕaɛazz il-wild*[i] *wild il-wild* the dearest children are the children of one's children. ‖ *beet il-wild* uterus.

ولدة *wilda* /n/ **1** brood (of nestlings), litter (of small animals). **2** newly formed fruit or vegetables still under the blossoms. *yadoob il-xiyaara lissa ṭarḥa wilda* the cucumber plant has just formed tiny fruits.

ولداه *wildaah: ya wildaah [women]* poor thing! as in *wi-huwwa maaʃi ya wildaah xabaṭit-u ɛarabiyya* while he was walking along, poor thing, a car hit him.

ولد *walad* /n pl *wilaad,* ʕawlaad/ **1** (also *waad*) boy, male child. - note vocative apocopate form *(ya) walah*. ‖ *(ṣuura) walad* jack (in cards). **2** /pl only/ children. ‖ *ʕiḫna wlaad in-nahar-da* let's forget the past and turn over a new leaf. - *wilaad balad* (1) compatriots. (2) those who adhere to traditional social values. - *wilaad kaar* enterprising people, go-getters. - *wilaad iṣ-ṣanɛa* colleagues in a trade. - *ʕawlaad iṭ-ṭariiq* followers of Sufi orders. - *kull-i-na wlaad tisɛa [prov]* (we are all born after a nine-month's pregnancy) ≈ we are all equal. - *kull-i-na wlaad ʕaadam (wi-ḫawwa)* ≈ we are all equal. - *ya wlaad* everyone (nonspecific form of address), as in *ʕeeh il-balwa di ya wlaad* what is this disaster, I ask you!

ولّود *walluud*↓ /adj */ *[slang]* clever, sharp.

ولادة *wallaada* /fem adj/ bearing many children. ‖ *ma-gabit-ak-ʃ*[i] *wallaada*↓ *[women]* you are so damn clever!

مولد *mawlad* /n/ **1** /no pl/ biography of the Prophet Muhammad, read as an act of piety. *fi-ʕaaxir il-leel iʃ-ʃeex yiqra l-mawlad wi-yixtim* at the end of the night the sheikh reads out the biography of the Prophet and then concludes. — /pl *mawaalid/* **2** celebration held in the home, a central feature of which is the reading of the biography of the Prophet. *lamma l-waad yiṭiib laazim tiɛmilu mawlad wi-twakkilu l-ɣalaaba* when the boy recovers from his illness you should hold a celebration in honour of the Prophet and feed the poor.

مولد *muulid, mawlid*↑ /n pl *mawaalid/* **1** popular religious festival on the anniversary of a venerated religious figure, usually held in the locality with which he, or she, is closely associated. *ʕil-muulid* or *muulid in-nabi* or *ʕil-mawlid in-nabawi* the Prophet Muhammad's birthday. **2** uproar, chaotic situation. *ma-fii-ʃ niẓaam ya ɛamm*[i] *da muulid* there's no organization, my good man, it's complete chaos! ‖ *nifuuf ʕaaxir il-muulid* we'll see this mess through to the end. - *muulid wi-ṣaḫb-u ɣaayib* a free-for-all.

موالدى *mawaldi* /n pl *-yya/* man whose profession it is to read or chant the *mawlad* and other texts in praise of the Prophet. ‖ *ʕir-raagil da ɛaamil zayy il-mawaldiyya* ≈ that man is a scavenger.

ميلاد *milaad* /n/ birth. *ʃahaadit il-milaad* birth certificate. *ɛiid milaad* birthday. ‖ *ɛiid il-milaad* Christmas.

ميلادى *milaadi* /adj */ pertaining to the birth of Christ. *ʕit-tariix il-milaadi* the Christian calendar. *ʕis-sana l-miladiyya* the year A.D.

اتولد *ʕitwalad* /vi/ to be born. - ava *mitwilid*.

ولّد *wallid* /vt/ **1** to assist in birth, deliver. *ʕidduu-ni bing*[i] *w-walliduu-ni bil-ɛidda* they gave me an anaesthetic and carried out the delivery with forceps. ‖ *wallidu l-baɣla* ≈ they did the impossible. **2** to generate. *tawliid ik-kahraba* generating of electricity. *ʕiḍ-ḍaɣṭ*[i] *ywallid l-infigaar* (too much) pressure causes an explosion. **3** to compose. *yismaɛ illi b-yiṭqaal wi-ywallid minnu ḫkaaya* he listens to what is said around then creates a story out of it. - vn *tawliid*; ava *miwallid, muwallid*↑; pva *miwallid, muwallad*↑.

مولّد *muwallid* /n pl *-aat/* generator. *muwallid kahrabaa* ʕi electrical generator.

مولّدة *muwallida* /n pl *-aat/* midwife.

مولّد *miwallad, muwallad* /adj */ clever, sharp-witted, crafty.

اتولّد *ʕitwallid* /vi/ to be or become generated. - ava/iva *mitwallid*.

اتوالد *ʕitwaalid* /vi/ to reproduce, multiply. - vn *tawaalud*↑; ava *mitwaalid*.

و ل س

ولس *wils* /n/ covering up (e.g., people's faults). *law in-naas tixla mil-wils*[i] *yoom waaḥid kunna ningaḥ* if people would rid themselves of duplicity for one single day, we should succeed.

ولّس *wallis* = *waalis*. - vn *tawliis*; ava *miwallis*.

والس *waalis* /vi/ to plot together, conspire. *ʕir-riff*[i]

waalis maʕaahum the referee was prejudiced in their favour. - vn *miwalsa*; ava *miwaalis*.
موالس *muwaalis* /n */ accomplice.

و ل ع

ولع *wiliʕ (a)* /vi/ **1** to catch (of fire), catch fire. *ʃin-naar wilʕit fi-hduum-u* his clothes caught fire. ‖ *ʃakal-ha walʕa* to snap up an opportunity. **2** to come on (of light, radio etc.). *ʃin-nuur wiliʕ fil-ʃooḍa* the light came on in the room. *sibna t-tilivizyuun waaliʕ* we left the television on. - ava *waaliʕ*.
ولعة *wilʕa* /n pl *-aat/* **1** camp-fire, open fire. *ʃil-ʕummaal ʠaʕdiin ḥawaleen il-wilʕa* the workmen are sitting around their fire. **2** ember, something burning, something alight. *wilʕa wiqʕit min ʃid-ha ḥaraqit is-siggaada* she dropped a coal and it burned the carpet. **3**↓ light (for a fire, cigarette etc.). *haat wilʕa lis-sigaara* give (me) a light for my cigarette! — /adj invar/ **4** *[slang]* smart, on-the-ball (of a person). *walad wilʕa w-ginn* a clever go-getter.
ولاعة *wallaaʕa* /n pl *-aat/* cigarette lighter, gas lighter.
ولّع *wallaʕ* /vt/ **1** to light, kindle, set fire to. *bi-twallaʕ il-babuur* she lights the paraffin stove. ‖ *wallaʕ ṣawabʕ-u l-ʕafara* to do one's best. **2** to switch on, turn on. *wallaʕit in-nuur* she turned on the light. *wallaʕ it-tilivizyuun* turn the television on! — /vi/ **3** to make a fire, kindle a flame. *wallaʕt[a] ʕal-ʃakl min saaʕa* I put the food on to cook an hour ago. *wallaʕ fi-nafs-(u)* to commit, or attempt to commit, suicide by burning oneself to death. **4** to catch fire. *ʃik-kabriit da ma-bi-ywallaʕ-ʃ* these matches don't strike. ‖ *ʃafayf-i wallaʕit min if-faṭṭa* my lips are burning because of the chilis. - *ḥa-ywallaʕ min l-ɣiira* he's burning with jealousy. - *ʃig-gaww[i] mwallaʕ (naar)* the weather is scorching hot. - *kull[a] ḥaaga mwallaʕa l-yomeen dool* everything is so expensive these days. **5** to come on (of light, radio etc.). *ʃil-ḥamdu li-llaah in-nuur wallaʕ* thank God, the light came on. **6** *[slang]* to take to one's heels. *ʃil-ḥaraami wallaʕ* the thief ran away. - vn *tawliiʕ*; iva *mitwallaʕ*.

اتولّع *ʃitwallaʕ* /vi/ **1** to be set alight. **2** to be switched on (of light, radio etc.). - iva *mitwallaʕ*.

و ل ف [1] see also ء ل ف [1] and ل و ف [4]
وليف *waliif* /n */ **1** sweetheart, lover. *kull[i] waliif wi-walift-u* each one has his own lover. **2** mate (of birds and monogamous animals). *ʃil-ʕaṣfuur maat ḥuzn[a] ʕala walift-u* the bird died of sorrow over the loss of his mate.

ولّف *wallif* /vt/ **1** to blend, mix. **2** to accustom (s.o. to s.th.). *ʃil-ḥubb[i] wallif-hum ʕala baʕḍ* love brought them together. — /vi/ **3** to become accustomed (to s.o. or s.th.), become affectionately familiar (with s.o. or s.th.). *ʃilli min ʕayyina waḥda bi-ywallifu ʕala baʕḍ* ≈ birds of a feather flock together. *dool miwallifiin ʕala baʕḍ* (1) they're used to each other. (2) they're in love with each other. **4** to mate (of animals). *ʃil-ḥamaama wallifit ʕala dakar ʃiswid* the hen pigeon took a black cock bird as a mate. - vn *tawliif*; ava *miwallif*.
توليفة *tawliifa* /n/ a blend. *tawliifit duxxaan* a blend of tobaccos. *tawliifit ʕalaf* livestock food mixture.
اتولّف *ʃitwallif* /vi/ **1** = *wallif* 3 and 4. **2** passive of *wallif* 1 and 2. - ava/iva *mitwallif*.

و ل ف [2]
ولف *wulf* <Engl *wolf*>: *kalb[i] wulf* Alsatian dog.

و ل ل ا
ولاّ *walla[1]* /conj/ **1** or. *taaxud baṭaaṭis walla ʠuuṭa* will you take potatoes or tomatoes? *ma-fii-ʃ taksiyyaat walla ʃeeh* are there no taxis or what? **2** /after an oath/ may I be ... (if I am lying). *wi-ḥyaat in-naar di walla-tḥiriʠ biiha ʃinnu huwwa lli xad-ha* he is the one who took it, and may I be burnt by this fire (if I am lying)!

و ل ه [1]
ولهان *walhaan* /adj */ passionately in love.
وله *walah[1]* /n/ passionate love.

و ل ه [2] see also و ل د
وله *walah[2]* abbreviated form of *walad*, occurring particularly as a form of address.

و ل و ل
ولول *walwil* /vi/ to wail in lamentation (of women). *ʃis-sittaat kaanu bi-ywalwilu wara l-mayyit* the women were following the dead man and wailing. - vn *walwala*; ava *miwalwil*.

و ل ى
ولاية *wilaaya* /n/ **1** guardianship, custody. *ʃil-ʃumm[i] laha wlaaya ʕala ʃawlad-ha baʕd[i] ʃabuu-hum* the mother has the legal custody of her children after their father. **2** qualities common to a *wali* (q.v.). *ʒaharit ʕalee ʕalamaat il-wilaaya* the signs of his being a *wali* were manifested. **3** succession to the throne. — /pl *-aat/* **4** state. *ʃil-wilayaat il-muttaḥida* the United States.
ولي *wali* /n pl *ʃawliya, ʃawliyya*↓/ man noted for his

piety and religious mien, saint. *yiruuḥu maṣr[i] yzuuru l-ʕawliya* they go to Cairo to visit (the shrines of) the saints.

أولى *ʕawla* /el/ more/most entitled, more/most deserving. *ʕiḫna ʕawla bii* we are more entitled to it, *ʕiḫna ʕawla nikkallim* we have a better right to speak.

أولويّة *ʕawlawiyya* /n pl *-aat*/ priority.

ولىّ *waliyy* /n pl *ʕawliyaaʕ*/ **1** (also *waliyy[i] ʕamr*) legal guardian. *naaẓir il-madrasa ɛayz-ak tigiib waliyy[i] ʕamr-ak* the school principal wants you to bring along your guardian. **2** successor, heir. *waliyy[a] ɛahd* heir apparent, crown prince. ‖*waliyy in-niɛam [obsol]* title of the Khedive of Egypt.

وليّة *wiliyya* /n pl *walaaya*/ **1** woman (generally of the lower classes). ‖*balaaʃ maʃaakil maɛaaha - di wliyya* stop troubling her - she's just a helpless woman! **2** /pl only/ dependant females. *ʕir-raagil da ɛandu walaaya* that man has (many) female dependants.

مولى *mawla* /n pl *mawaali*/ **1** lord, master. *ya mawlaana* term of address or reference to an older Muslim religious man specifically a teacher at el-Azhar. **2** *ʕil-mawla* the Lord (epithet of God). *ʕilli yustur-u l-mawla ma-yifḍaḥ-uu-ʃ il-ɛabd [prov]* ≈ with God's protection one is invulnerable. *ya-mawlaa-ya kama xalaqt-i-ni* ≈ as naked as the day that I was born (i.e. penniless).

ولّى *walla[2]* /vt/ **1** to put (s.o.) in charge, grant custody to (s.o.). *miin wallaa-k ʕamr-i* who appointed you as my custodian? **2** to turn (s.th.) towards (s.o.). *wallit-u ḍahr-a-ha* she turned her back on him. — /vi/ **3** to flee. *zaman if-ʃabaab walla* the days of youth are gone. *saaɛit ma ʃaf-ni walla* as soon as he saw me he ran away. - vn *tawliya, tawliyya*; ava/pva *miwalli*.

اتولّى *ʕitwalla* /vt/ **1** to be in charge of. *ʕis-sifaara b-titwalla maṣaaliḥ raɛayaa-ha fil-xaarig* the embassy is in charge of its citizens' interests abroad. *rabb-i-na yitwallaa-na b-raḥmit-u* may God protect us with his mercy! **2** to be put in charge. - ava/iva *mitwalli*.

والى *waala* /vt/ to apply oneself continuously or repeatedly to. *niwaali n-nigiil ʕusbuuɛ bil-mayya* we water the grass continuously for a week. ‖*ʕird[i] mwaali wala ɣazaal ʃaarid [prov]* (a baboon that is near is better than a gazelle that is far away) ≈ familiarity is more endearing than beauty. - vn *miwaliyya*; ava/pva *miwaali*.

اتوالى *ʕitwaala* /vi/ passive of *waala*. - iva *mitwaali*.

استولى *ʕistawla* /vi/ **1** to take possession. *ʕistawlu ɛas-sulṭa* they seized power. ‖*ʕistawla ɛala ɛaql-a-ha* he controlled all her thinking. - *ʕistawlit ɛala ɋalb-i* she stole my heart. **2** to pretend to be or act as a *wali*. - vn *ʕistiila, ʕistiwla*; ava *mistawli*.

و م ء see و م ى

و م س

مومس *muumis* /fem n, pl *-aat*/ prostitute, harlot, whore.

و م ى

ومى، ومأ *wama* /n/ hint, slight indication. *ʕiḫna b-nifham bil-wama* just a nod is enough explanation for us.

و ن ج

ونج *wing* <Engl> /n/ *[sport]* **1** wing. **2** /pl *-aat, wunúga*/ winger.

و ن س see also ء ن س [1]

ونس *wanas* **1** /adj invar/ lively, abounding in social activity (of a place). *balaaʃ tiskunu fil-maɛaadi - ʕid-duɋɋi wanas ʕaktar* don't live in Ma'adi; Dokki is more lively. **2** /n/ company, companionship. *xadt-a-ha maɛaaya wanas* I took her with me for company. *b-aɋɛud ɛanduku l-ʔagl il-wanas* I come and spend time at your place (just) for the sake of company.

ونيس *waniis* /n invar and fem *waniiṣa*/ companionable person. *bint-i kaanit ʕaḥsan waniis* (or *waniisa*) *liyya fir-riḥla* my daughter kept me company on the trip better than anyone else.

ونّاسة *wannaasa* /n pl *-aat*/ night-light. - also *nawwaasa*.

ونّس *wannis* /vt/ to keep company with, while away time in the company of (s.o.). *ɋaɛadit maɛaaya twannis-ni l-ɣaayit gooz-i ma ga* she sat with me to keep me company until my husband arrived. - vn *tawniis*; ava/pva *miwannis*.

اتونّس *ʕitwannis* /vi/ passive of *wannis*. - iva *mitwannis*.

و ن ش

ونش *winʃ* <Engl> /n pl *ʕawnaaʃ, winʃaat*/ winch, crane. *mara zayy il-winʃ* a big fat woman.

ونّاش *wannaaʃ* /n * and pl *wannaaʃa*/ crane operator.

و ن ن

ون *wann (i)* /vi/ **1** to hum or whir (of revolving objects). *ʕin-naḫla nizlit tiwinn* the top came down whirring. **2** /usu w neg/ to slow down. *da-na ma-b-awinn[i]-ʃ ṭuul in-nahaar* I never slacken up all day long. *ruuḥi ʕindahii-lu wi-wɛi twinni* go and call him and don't waste time. - vn *wann*; ava *waanin*.

ونّن *wannin* /vi/ *[slang]* to get drunk. - vn *tawniin*; ava *miwannin*.

و ن و ن

ونوَن *wanwin* /vi/ to wail, groan. *miʃ ḫa-taxud-ha lamma twanwin* you won't take it even if you moan (all day about it). - vn *wanwana*; ava *miwanwin*.

و ه ب

وهب *wahab (i)* /vt/ to grant, bestow, give (s.th.) free. *wahabt[i] nafs-i l-xidmit il-ʃixwaan* I have devoted myself to the service of friends. *ʃabuu-ya wahab-ni lil-ʃazhar* my father dedicated me to (studying at) el-Azhar. *wahabit-u nafs-a-ha* she gave herself to him. *rabb-i-na wahab-u ʒ-ʒakaaʃ wil-maal wil-wilaad* God blessed him with intelligence, money and children. *ʃil-muʕgizaat illi rabb-i-na wahab-ha l-sayyid-na muusa* the miracles the Lord granted Moses to perform. - vn *wahba, hiba, wahb*; ava *waahib*; pva *mawhuub*.

وهبة *wahba↓* /n pl *-aat*/ **1** tip, gratuity. **2** gift, present.

هبة *hiba* /n pl *-aat*/ donation, gift. ‖*hibit il-manʔuul* percentage paid to the government on transfer of property.

موهوب *mawhuub* /adj */ gifted, talented.

وهّابي *wahhaabi* /adj */ Wahhabite.

الوهّابيّة *ʃil-wahhabiyya* /n/ Wahhabism.

موهبة *mawhiba* /n pl *mawaahib*/ talent, gift, natural ability.

اتوهب *ʃitwahab* /vi/ to be granted, be bestowed, be given free. - iva *mitwihib*.

و ه ج [1]

وهج *wahag[1] (i)* /vt/ to confuse, fluster. - vn *wahagaan, wahga*; ava *waahig*; pva *mawhuug*.

اتوهج *ʃitwahag* /vi/ to be or become confused or flustered. - ava/iva *mitwihig*.

انوهج *ʃinwahag* = *ʃitwahag*. - ava/iva *minwihig*.

و ه ج [2]

وهج *wahag[2]* /n/ glare, glow.

اتوهّج *ʃitwahhag* /vi/ to glow, flame, glare. - vn *tawahhug*; ava *mitwahhig*.

و ه ر

وهر *wahar (i)* /vt/ to frighten, alarm. *ʃir-raagil min wahrit-u zaʔʔ il-waad kaan ḫa-ywaʔʔaʕ-u* the man in his fright pushed the boy and nearly knocked him down. - vn *wahar, wahra, waharaan*; ava *waahir*; pva *mawhuur*.

اتوهر *ʃitwahar* /vi/ to be or become frightened or alarmed. - ava/iva *mitwihir*.

انوهر *ʃinwahar* = *ʃitwahar*. - ava/iva *minwihir*.

و ه ل

وهلة *wahla↑*: *min ʃawwil wahla* at first sight.

و ه م

وهم *waham (i)* /vi/ **1** to delude, deceive, dupe. *huwwa b-yiwhim in-naas bi-ʃinnu b-yiʕraf kull[a] ḫaaga* he makes people believe that he knows everything. **2** to worry, alarm, scare. *kalaam id-duktuur waham-ni* what the doctor said worried me. *waaʔif fiḍ-ḍalma ʕaʃaan yiwhim il-walad* he is standing in the dark to give the child a fright. - vn *wahm*; ava *waahim*; pva *mawhuum*.

وهم *wahm* /n pl *ʃawhaam*/ **1** unreality, illusion. *ʕaalam il-wahm* the world of fantasy. *geeti ṭṣaḥḥii-ni min noom-i ʕalaʃaan il-wahm[i] da lli f-ʕaʔl-ik* did you come to wake me from my sleep because of this fantasy in your mind? **2** hypochondria. *ʕandu wahm[i] gaamid* he is a hypochondriac.

وهمي *wahmi* /adj/ fictitious, false. *ʒahar ʃinn il-ʕinwaan illi ʃidda-huu-ni wahmi* it turned out that the address he gave me was a false one.

وهمجي *wahmagi* /n pl *-yya*/ **1** superstitious person. **2** hypochondriac.

اتوهم *ʃitwaham* /vi/ **1** to be deluded, be deceived, be duped. **2** to be or become worried, be alarmed, be scared. - ava/iva *mitwihim*.

اتوهّم *ʃitwahham* /vi/ to suffer delusions, imagine things. - ava *mitwahham*.

و ه و ج

وهوج *wahwig* /vi/ to burn violently. *ʃin-naar wahwigit* the fire rose high. *buʔʔ-i wahwig mif-faṭṭa* my mouth is burning from the chilis. ‖*ʕaʔl-u mwahwig* he is bright. - vn *wahwaga*; ava *miwahwig*.

اتوهوج *ʃitwahwig* = *wahwig*. - ava *mitwahwig*.

و ه و ه

وهوه *wahwah* /vi/ to moan or groan with pain. - vn *wahwaha*; ava *miwahwah*.

و ى ب

ويبة *weeba* <Copt> /n pl *-aat*/ *[obsol]* measure equal to one-sixth of an ardeb. ‖*filuus bil-weeba* lots of money. - *xeeba bil-weeba* a gross failure.

و ى ز ى

ويزى *wiizi* /n/ pound note (in the jargon of those who practise the three-card trick).

(و ى ك)

ويكة *weeka* <perh Copt> /n/ dish of okra cooked with water and butter to a soupy consistency.

ويكة *wiika* /adj invar/ *[slang]* cheeky, playful. *banaat wiika* coquettish girls. *ʔinta ya wiika ya btaaʕ il-bulitiika* ≈ you cheeky devil!

و ى ل

ويل *weel* /n/ agony. *goz-ha warraa-ha l-weel fa-ṭalabit iṭ-ṭalaaq* her husband made her life a misery so she asked for a divorce. *ya-weel ...* woe is ..., as in *ya weel-i* woe is me. ‖ *ya weel-ak* (1) tough luck! (2) I'll give you a rough time! - *ya-weel-u ya-sawaad leel-u* he is in for a terrible time.

و ى م

ويم *wayam* /n/ approximation. *xadt il-maqaas bil-wayam* I took an approximate measurement.

وايم *waayim* /vt/ to approximate, estimate. *niwaayim ʕaff iʃ-ʃaqqa l-ʔawwil wi-baʕdeen niʕmil il-mazaad* we first estimate (the value of) the furniture in the flat and then hold the auction. - vn *miwayma*; ava/pva *miwaayim*.

موايمة *miwayma* /n/ approximation. *bil-miwayma* approximately. ‖ *da ʕaayiʃ bil-miwayma* he leads a happy-go-lucky kind of life.

و ى ى ا

ويّا *wayya* /prep, w pron suff *wayyaa-*, 1st pers sing *wayyaaya*/ with, together with, accompanying. *miin wayyaak* who is with you? ‖ *wayyaak wayyaak ʕaleek ʕaleek* (he) follows others without examining the situation (of one who has no mind of his own).

ي

(ى ا)

يا *ya*[1] **1** vocative particle. *ya mḥammad* Muhammad! *ya sitt* Madam! *ya-bn-i* my boy! *ya-bn il-ʕeeh* you son of a so-and-so. **2** particle of self-apostrophization. *ʕiḥna ya maṣriyyiin* we Egyptians. *ɛayzin-ni ʕana ya ɤariib ʕafassaḥ-u* you want me, a complete stranger, to show him around? **3** exclamatory particle. *ya gamaal-ik* how beautiful you are! ‖ *(ʕaah) ya-ana* or *y-aani* exclamation of distress or pain ≈ o me o my! as in *y-aani mil-ḥubb* poor me, when it comes to love! - *y-aadi, y-adi* /w foll n without agreement/ what a ...! as in *y-adi n-nahaar il-ʕiswid* what an awful day! *y-aadi n-nuur* expression of welcome ≈ what a light (which illuminates our house)! Look up *ya ʕimma, ya baay, ya tara, ya reet* and *ya huuh* under *ʕimma, baay, raʕa, reet* and *huuh* respectively. for *yadoob* see ى د و ب ; for *yalla* see ى ل ل ا .

يا *ya*[2] <P *ya*> /correl conj/ either ... or. *ya tuqɛud ya timfi laakin ma-tuqaf-ʃ*[i] *kida* either sit down or go, but don't just stand there like that. *huwwa ya qadd-ak ya bil-kitiir ʕakbar minnak bi-sana* he's either your age or, at the most, a year older. ‖ *ya ʕana ya ʕinta n-nahar-da* I'll show you here and now!

يا *yaa* /fem n, pl *yahaat*/ twenty-eighth and last letter of the Arabic alphabet. - also *yaaʃ, yih, yeeh*.

ى ا ء

ياء *yaaʃ* /fem n, pl *-aat*/ twenty-eighth and last letter of the Arabic alphabet. *min il-ʕalif ʕila l-yaaʃ* from A to Z. - also *yaa, yih, yeeh*.

ى ا ب

ياب *yaab* <prop n *Yapp*>: *tagliid yaab* kind of book-binding in limp leather with decorated edges.

ى ا ق

ياقة *yaaqa* <T *yaka*> /n pl *-aat*/ collar (of a garment). *nuṣṣ*[i] *yaaqa* mandarin collar, half collar. - also *liyaaqa*.

ى ا م ا

ياما *yaama* /exclam part/ how! how often! how much! how many! *yaama naṣaḥt-ak* how often have I advised you! *yaama-na ḥaznaan* how sad I am! *yaama b-titɛab ɛaʃanna* how much trouble you go to for us! *yaama fii fuqara* how many poor there are! *yaama fil-ḥabs*[i] *mazaliim [prov]* how many are those who are wrongly imprisoned! ‖ *ʕilli yɛiiʃ yaama yʃuuf [prov]* ≈ the longer you live the more you see. - *yaama tʃuuf* or *yaama bukra tʃuuf* ≈ that's the least of it, that's nothing to what you'll see later. - *yaama hina yaama hnaak* (1) everywhere, all over, as in *ʕil-muʃkila di miʃ fi-maṣr*[i] *bass - yaama hina yaama hnaak* this problem is not restricted to Egypt - it's the same story everywhere. (2) well-off, as in *ʕiftakart innu yaama hina yaama hnaak wi-ʕatabii mifallis* I thought he was well-off, but it turns out he's broke (cf *la hina wala hnaak*).

ى ا ن ا see ى ا : *ya-ana*

ى ا ن ص see ى ن ص ى ب : *yaanaṣiib* –

ى ا ن ى see ى ا : *y-aani*

ى ا ه

ياه *yaah* /interj/ exclamation of surprise ≈ well I never! my! *yaah da-ḥna tʕaxxarna qawi* my! we really are late!

ى ا و ر

ياور *yaawir* <T *yaver*> /n pl *-aat*/ aide-de-camp.

ياوران *yawraan: kibiir il-yawraaɾ* chief of protocol.

ى ا ى

ياى *yaay* <T *yay*> /n pl *-aat*/ small coil or spring.

ى ء س
يئس *yiʔis (a)* /vi/ to despair. *yiʔist^{i} minnu* I despaired of him. *mayʔuus min* hopeless, as in *ʔil-ʁabaawa maraḍ mayʔuus min ʃifaa* stupidity is a disease for which there is no hope of a cure. - vn *yaʔs*; ava *yaaʔis*; pva *mayʔuus*.
يأس *yaʔs* /n/ despair. ‖*sinn il-yaʔs* menopause.
يأسان *yaʔsaan* /adj */ despairing, in despair.
اتيأس *ʔityaʔas* /vi/ (impersonal) passive of *yiʔis*. *riḍa rabb-i-na ma-yityiʔis-f^{i} minnu* God's salvation is not to be despaired of. - iva *mityiʔis*.
يأّس *yaʔʔis* /vt/ to make (s.o.) despair. *ma-fii-ʃ ʔabadan ḥaaga tyaʔʔis-ni min raḥmit illaah* nothing would make me despair of God's grace. - vn *tayʔiis*; iva *miyaʔʔis*.
اتيأّس *ʔityaʔʔis* /vi/ passive of *yaʔʔis*. - iva *mityaʔʔis*.
يائس *yaaʔis* /vi/ to take a chance in desperation, take a risk as a last resort. *yaʔist^{i} w-ṭaffeet in-naar bi-ʔiid-i* I risked it and put out the fire with my hand. - vn *miyaʔsa*; ava *miyaaʔis*.

ى ء م م see ا ء م م: *ya ʔimma, ya ʔimman, ya ʔimmatan*

ى ب ا ن
اليابان *ʔil-yabaan* /prop n/ Japan.
يابانى *yabaani* **1** /adj */ Japanese. **2** /n */ a Japanese. **3** /n, no pl/ the Japanese language.

ى ب ا ى see ب ا ى: *ya baay*

ى ب ر see ء ب ر^{1}: *meebar*

ى ب س
يبس *yibis (a)* /vi/ to get dry or stiff in consistency. *ʔil-ʁagiin yibis ʁal-xabiiz* the dough has become too stiff to bake well. - vn *yabasaan, yibuusa, yubuusa*.
يبوسة *yibuusa, yubuusa* /n/ dryness, stiffness.
يبسان *yabsaan* /adj */ = *yaabis*.
يابس *yaabis* /adj/ dry. *ʁagiina yabsa* stiff dough.
يبّس *yabbis* /vt/ to dry and stiffen in consistency. *ʔil-ḥaraara wil-hawa yabbisu wiff il-ʁagiina* heat and air dried the surface of the dough. - vn *taybiis*; ava/pva *miyabbis*.
اتيبّس *ʔityabbis* /vi/ to be or become dried and stiffened in consistency. *ʔil-ʁagiina di ṭariyya zyaada laazim tityabbis bi-ʃwayyit diqiiq* this dough is too wet, it should be stiffened with some flour. - vn *tayabbuṩ*; ava/iva *mityabbis*.

ى ب ل see ى ب ى ل: *yubiil*

ى ب ا ن see ى ب ا ن: *ʔil-yabaan, yabaani*

ى ب ى ل
يوبيل *yubiil* <Heb> /n/ jubilee. *ʔil-yubiil il-faḍḍi* silver jubilee.

ى ت ر ا see ى ء ر: *ya tara*

ى ت م^{1}
يتيم *yitiim, yatiim* /n pl *yutama, ʔaytaam, yataama*/ **1** /adj/ **1a** deprived by death of a parent. *yitiim il-ʔabb^{i} wil-ʔumm* parentless. **1b** sole, only. *ʔil-madrasa l-yitiima f-balad-na* the only school in our village. ‖*ʔig-gumʁa l-yatiima* last Friday in Ramadan. **2** /n/ fatherless child. *ʁaʃa l-yataama ʁaleek ya rabb [women beggars]* the fatherless children's supper depends on you, O Lord!
يتّم *yattim* /vt/ to orphan, render an orphan. *ʔil-ḥadsa yattimit-ha* the accident made her an orphan. - vn *taytiim*; ava *miyattim*.
اتيتّم *ʔityattim* /vi/ to be orphaned. *ʔil-ʁiyaal ityattimu - ma-lhum-f^{i} ɣeer rabb-i-na* the children have been orphaned - they have no one but God. - iva *mityattim*.

ى ت م^{2}
ميتم، مأتم *maytam* /n pl *mayaatim*/ gathering for, or place of, paying condolences during the three days immediately following a death.

ى ث ر ب see ى س ر ب

ى ج ب see و ج ب: *yagib*

ى ج و ج
يجوج *yaguug: (ʁamliin) zayy^{i} yaguug wi-maguug* (they are behaving) in a very rowdy way.

ى خ ت
يخت *yaxt* <Engl> /n pl *yuxuut, yuxúta*/ yacht. *naadi l-yaxt* yacht club.

ى خ ن ى
يخنى *yaxni* <P *yakhnî*> /n/ baked meat or fish dish with onion and tomato. ‖*xalla l-ḥikaaya yaxni* he made a mess of the affair.

ى د
يد *yad↑* /fem n, pl *ʔaydi*/ hand. *bi-yad-i la bi-yadi ʁamr [prov]* I'd rather do it myself (unpleasant as it is) than have someone do it for me.

يدوى *yadawi* /adj/ pertaining to the hand, manual. *munʃaar yadawi* handsaw. *gamɛ[i] yadawi* manual typesetting. see further under ى د د and ء ى د

ى د د see also ء ى د and ى د
يدّ *yadd* /fem n, pl ʃayaadi/ 1 hand (especially in abstract senses). *maɛmuul bil-yadd* (or *bil-ʃiid*) handmade. ‖*ɛala yadd* (or *ɛala ʃiid*) (1) in the presence of. (2) under the supervision of. - *ɛan yadd* under the hand of, as in *maktuub ɛan yadd[i] waaḥid muḥaami* written under the hand of a lawyer. - *kull-u b-yadd illaah* it's all in God's hands. - *rabb-i-na yaaxud bi-yadd-ak* God help you! God grant you success! - *ma-bil-yadd[i] ḥiila* there's nothing I can do, I'm powerless to act. - *waqɛ il-yadd* (1) *[leg]* squatter's rights. (2) *[Chr]* laying on of hands. - *kull-u-hum yadd[i] waḥda* they act as one man, they're united. 2 grip, handle. *yadd[i] musaddas* a revolver butt.

ى د د و
يدّو *yaddu* /n/ style of serving in the game *xara* (q.v.).

ى د و see ى د : *yadawi*

ئ د و ب
يادوب *yadoob* /adv/ barely, (only) just, hardly. *ʃiḥna yadoob ɛarfiin niɛiif* we are barely able to survive. *ʃana yadoob waaxid nafas-i* I have barely caught my breath. *ʃana yadoob ma-xadt[i]-ʃ nafas-i* (1) I'm just on the point of catching my breath. (2) I've just this very second caught my breath. *ʃana yadoob sinn-i sitta w-ɛiʃriin* I'm barely twenty-six years old.
يادوبك *yadoobak* = *yadoob*.

ى ر د
يردة *yarda, yarda* <Engl> /n pl *-aat, -aat*/ yard (measurement).

(ى ر ق)
يرقة *yaraqa, yaraqa* /n pl *-aat*/ larva.
يرقان *yaraqaan, yaraqaan↑* /n/ jaundice.

ى ر ن ى
يرنى *yarni* /adv/ *[slang]* in cash. *ɛaawiz filuus-u yarni* he wants his money in cash.

ى ر ى ت see ر ى ت : *ya reet*

ى ز ب ا -
يوزباشى *yuzbaaʃi* <T *yüzbaşı*> /n pl *-yya*/ *[mil, obsol]* captain (replaced by the rank of *naqiib*).

ى ز ر ج
يازرجة *yazirga* <perh P *zâycha*> /n pl *-aat*/ table of magic numbers and letters used in telling fortunes etc. - also *zayirga*.

ى ز و ل
يزول *yazool* <prob Engl> /n/ lysol.

ى س ت ف -
يوستفندى *yustafandi* <prop n> /coll n/ tangerine(s). - also *yusafandi, yuusif ʃafandi, yusfi, safandi, ʃistafandi*.
يوستفنديّاية *yustafandiyyaaya* /unit n, pl *-aat*/ a tangerine. - also *yusafandiyyaaya, yuusif ʃafandiyyaaya, safandiyyaaya, ʃistafandiyyaaya*.

ى س ر [1]
يسر *yusr[1]* /n/ 1 ease, facility. 2 wealth, affluence.
يسر *yasir: maaʃ yasir* soft water.
أيسر *ʃaysar* /el/ easier/easiest.
يسير *yasiir* /adj, fem *yisra, yasiira*/ easy. ‖*mayya yisra* soft water.
ميسرة *maysara* /n/ comfort, wealth, prosperity. *naas ɛanduhum maysara* well-to-do people. *ɛeela ɛayʃa f-maysara* a well-off family.
ميسور *maysuur* /adj */ well-off, well-to-do. *ʃeef gab-na lin-naas il-maysuriin il-ḥaal dool* what are we compared with those rich people?
يسّر *yassar* /vt/ 1 to facilitate. 2 to ease the financial circumstances of (s.o.). - vn *taysiir*; ava *miyassir, miyassar*; pva *muyassar*.
ميسّر *muyassir* /n/ Facilitator (epithet of God).
اتيسّر *ʃityassar* /vi/ 1a to become easy, be made easy. 1b to thrive, become prosperous. *ʃir-raagil da mityassar* that man is well-off. 2 to be possible. *ʃidfaɛ illi yityassar-lak* pay what you can. - ava/iva *mityassar*.
تيسّر *tayassar↑* = *ʃityassar*. *ma tayassar* what's available. *kul ʃahi luqma ɛala ma tayassar* ≈ help yourself to a bite of what's going. *ʃiʃ-ʃeex ḥa-yiqra ma tayassar min il-qurʃaan* the sheikh will read certain verses of the Koran.

ى س ر [2]
اليسار *ʃil-yasaar* /n/ the (political) left.
يسارى *yasaari* 1 /adj */ leftist, left-wing. 2 /n */ a leftist.

ى س ر [3]
يسر *yusr[2]: sibḥa yusr* precious black coral or jet prayer beads studded with silver.

ى س ر [4] see ء س ر [1]: *yusara*

ى س ر ب
يثرب *yasrib* /prop n/ *[obsol]* pre-Islamic name of Medina in Arabia. *ʕin ʃa-lla titwiɛid bil-ḥigg[i] w-bi-zyaarit ʕarḍ[i] yasrib [Isl]* may you make the pilgrimage (to Mecca) and visit Medina!

ى س ف ن –
يوسفندى *yusafandi* <prop n> /coll n/ tangerine(s). - also *yustafandi, yuusif ʕafandi, yusfi, safandi, ʕistafandi.*
يوسفنديّاية *yusafandiyyaaya* /unit n, pl *-aat*/ a tangerine. - also *yustafandiyyaaya, yuusif ʕafandiyyaaya, safandiyyaaya, ʕistafandiyyaaya.*

ى س ف ى
يوسفى *yusfi* <prop n> /coll n/ tangerine(s). - also *yusafandi, yustafandi, yuusif ʕafandi, safandi, ʕistafandi.*

ى س م ى ن
ياسمين *yasmiin* <P *yâsamîn*> /coll n/ jasmine. *yasmiin baladi* common jasmine. ‖*yasmiin hindi* pagoda tree, frangipani.
ياسمينة *yasmiina* /unit n, pl *-aat*/ a jasmine flower or plant.
ياسمينايا *yasminaaya = yasmiina.*

ى س و ع
يسوع *yasuuɛ* /prop n/ *[Chr]* Jesus.
يسوعى *yasuuɛi* /n */ Jesuit. *ʕil-ʕabaaʕ il-yasuɛiyyiin* the Jesuit Fathers.

ى س ى ن
ياسين ، يس *yasiin* /prop n/ name of the thirty-sixth sura of the Koran (see also *ɛiddiyyit yasiin*).

ى ش ب
يشب *yaʃb* /n/ jasper.

ى ش م ك
يشمك *yaʃmak* <T *yaşmak*> /n/ *[obsol]* face-veil.

ى ع ن ى see ع ن ى: *yaɛni*

ى غ م
يغمة *yaɣma* <P *yaghmâ*> /n/ booty, plunder. ‖*ʕil-ḥikaaya baqit yaɣma* the affair turned into a free-for-all.

يغمجى *yaɣmagi* /n pl *-yya* plunderer, grabber.

ى غ ن ى ش
يغنيش *yaɣniiʃ: ʕil-ɣiff[i] wil-yaɣniiʃ* deceit.

ى ف ط
يافطة *yafṭa* <T *yafta*> /n pl *-aat, yufaṭ*/ sign-board, notice-board, something written for display. *yafṭit dukkaan* shop sign. *yafṭit qurʕaan* a verse or phrase from the Koran written in calligraphy for display. - also *lafta.*

ى ق ظ
يقظ *yaqiẓ* /adj */ alert, vigilant.
يقظة *yaqaẓa* /n/ wakefulness. *ma-ɋdirt[i]-ʃ ʕasaddaq ɛenay-ya - ʕana f-yaqaẓa walla f-manaam* I couldn't believe my eyes! Was I awake or just dreaming?
اتيقّظ *ʕityaqqaẓ* /vi/ to become alert, vigilant or cautious. - vn *tayaqquẓ*; ava *mityaqqaẓ.*
مستيقظ *mistayqiẓ* /adj */ alert, vigilant.

ى ق ن
يقين *yaqiin* /n/ certainty. ‖*yaqiin-i bi-llaah yaqii-ni* my faith in God protects me. *ɛala yaqiin* sure, as in *ʕana ɛala yaqiin ʕinnu lissa ma-waṣal-ʃ* I am dead sure he hasn't yet arrived.
يقينى *yaqiini* /adj/ certain, absolute. *furuuq fibh[i] yaqiniyya* disputable assumptions.
اتيقّن *ʕityaqqan* /vi/ to make sure (of s.th.). *kaʃaft[a] ɛak-kilma fil-qamuus ɛafaan ʕatyaqqan min maɛnaaha* I looked up the word in the dictionary to be sure of its meaning. - ava *mityaqqan.*

ى ق و ت
ياقوت *yaquut* /n/ ruby. ‖*yaquut ʕaṣfar* topaz.
ياقوتة *yaquuta* /unit n, pl *-aat*/ a ruby.
ياقوتى *yaquuti* /adj invar/ of or pertaining to ruby. *ʕaḥmar yaquuti* ruby-red.

ى ك ا ه
يكاه *yakaah* <T *yegâh* from P> /n/ *[mus]* 1 name given to the note G below middle C. 2 mode in Arabic music beginning on bottom G and having B flat and E flat.

ى ك ك
يكّ *yakk* <P *yak*> /n/ one (in dice). *xaanit il-yakk* first point (on a backgammon board). ‖*ʕitzanaq fi xaanit il-yakk* he is in a tight corner, he's been trapped.

ى ل ك
يلك *yalak* <T *yelek*> /n pl *-aat*/ *[obsol]* (woman's) vest, waistcoat.

ى ل ل ا
يلا *yalla* /interj/ come on! get on! move! *yalla biina* let's go! let's get on with it! ***yalla kul*** come on, eat! *yalla nnaam* let's go and lie down! ‖***yalla s-salaama*** ≈ God protect us! (to ward off disaster).
¶ *ma-tyalla* come on! get moving!

ى ل ى
يولية *yulya* /n/ July.
يوليو *yulyu* /n/ July.

ى م خ ا ن
يمخانة *yamaxaana* <T *yemekḫane*> /n pl *-aat*/ *[mil, obsol]* mess. ‖*ʕinta fakir-ha yamaxaana hina* do you think this place is a free feeding house?! - also *yamakxaana*.

ى م ش see ى م ى ش: *yamiiʃ*

ى م ك
يمك *yamak* <T *yemek*> /n/ *[mil, joc]* food, chow (particularly lentils).
يمكخانة *yamakxaana* /n pl *-aat*/ *[mil, obsol]* mess. - also *yamaxaana*.
يمّيك *yammiik* /n/ *[mil, joc]* glutton, chow hound.
يمّك *yammik* /vi/ *[mil, obsol]* to wolf one's food. - ava *miyammik*.

ى م م [1]
يمّ *yamm* /n/ direction. *ruḥt[i] yamm il-baab* I went towards the door. *ʕiwʕa tiigi yamm-u-hum* don't come near them!
يمّة *yamma* /n/ side. *fil-yamma l-biʕiida* on the far side.

ى م م [2]
اتيمّم *ʕityammim* /vi/ *[Isl]* to perform ritual purification of oneself with sand or dust (in the absence of water). - vn *tayammum*; ava *mityammim*.

ى م م [3]
يمام *yamaam* /coll n/ dove(s). ‖*zayy beeḍ il-yamaam ya ʕinab [vendor's cry]* ≈ grapes as large and rich as doves' eggs!
يمامة *yamaama* /unit n, pl *-aat*/ a dove.

ى م ن [1]
يمن *yumn* /n/ good luck, good fortune, prosperity. *ʕiid saʕiid yiʕuud ʕaleekum bil-yumn[i] wil-barakaat* happy feast, may it return with all prosperity and blessings.
يمين *yimiin[1], yamiin[1]* **1** /n/ **1a** right(-hand side). *ʕala ymiin if-faariʕ* on the right-hand side of the street. ‖*ʕuḍw il-yimiin [leg]* second-ranking judge on a three-judge panel. **1b** *ʃil-yimiin, ʃil-yamiin* the (political) Right. **2** /adj invar/ right, right-hand. *ʃin-naḥya l-yimiin min if-faariʕ* the right-hand side of the street. - /adverbially/ *liff[i] ymiin* turn right! *yimiin duur [mil]* right face!
يميني *yimiini, yamiini* **1** /adj */ rightist, right wing. **2** /n */ a rightist.
أيمن *ʃayman↑* /adj/ right(-hand side). *ʃil-ganaaḥ il-ʃayman [soccer]* the right flank.
ميمنة *maymana* /n/ right side. *geef il-maymana [mil]* the right flank. ‖*ʃaṣḥaab* (or *ʃahl) il-maymana [Isl]* the blessed.
ميمون *maymuun* **1** /adj/ blessed. *qiraan maymuun* blessed marriage! **2** /n/ monkey attached to a street performer.
ميموني *maymuuni* /n/ type of *maʃrafiyya* pattern (see Pl.G, 13).
تيمّن *tayammun↑* /n/ auspiciousness.
¶ *tayammunan* /adv/ as a good omen. *fii naas tisammi ʃawlad-ha mḥammad tayammunan bi-sm in-nabi* there are people who name their children Muhammad hoping to invoke the blessing of the Prophet's name.

ى م ن [2]
اليمن *ʃil-yaman* /prop n/ Yemen.
يمني *yamani* **1** /adj */ Yemeni. ‖*ḥamaam yamani* large variety of pigeon, not generally domesticated, although a household may keep one for good luck. **2** /n */ a Yemeni.
يماني *yamaani* = *yamani*. ‖*ʃir-rukn il-yamaani [Isl]* corner of the Kaaba which pilgrims touch or point at as part of the pilgrimage ritual.

ى م ن [3]
يمين *yimiin[2], yamiin[2]* /n/ **1** /pl *ʃaymaan, ʃaymanaat↓*/ oath. *ʕalayya l-yamiin* I swear. *ḥilift[i] ymiin biṭ-ṭalaaq min miraat-i m-akallim-u* I swore that my wife would be divorced if I spoke to him. ‖*wi-maa-lak ʕalayya yimiin* ≈ and although you have no right to demand an oath from me that the case is so, nevertheless I swear it is. — *ʃaymaan, ʃaymanaat↓* /pl n/ **2** descriptive intensifier. *huwwa ṭaaliʕ diin ʃaymaan ʃahl-u fiʃ-fuxl* ≈ he's working fit to bust a gut.

ى م ى ش
يااميش *yamiif* <T *yemiş*> /n/ nuts and raisins (especially as ingredients for sweets) sold during Ramadan.

ى ن ا ن
اليونان *ʕil-yunaan* /prop n/ Greece.
يونانى *yunaani* **1** /adj */ Greek. ‖*ʠaalib yunaani* last for a round-toed shoe. **2** /n */ a Greek. **3** /n, no pl/ the Greek language.

ى ن ا ى ر
يناير *yanaayir* /n/ January.

ى ن ب و ع see ن ب ع : *yanbuuʕ*

ى ن س و ن
ينسون *yansuun* /n/ aniseed; a hot drink made of the same.

ى ن ص ى ب see also ن ص ب [1]
يانصيب *yanaṣiib, -yaanaṣiib* /n/ lottery. *waraʠit il-yanaṣiib* lottery ticket.

ى ن ن ي
ينى *yanni* /prop n/ Greek male given name. ‖*sakrit yanni* ≈ as drunk as a Greek barman can make one.

ى ن ى
يونية *yunya* /n/ June.
يونيو *yunyu* /n/ June.

(ى ه)
يا *yih*[1] /fem n, pl *-aat*/ twenty-eighth and last letter of the Arabic alphabet. -also *yaa, yaaʕ, yeeh.*
يه *yih*[2], *yuh, yah* exclamation indicating wonder, admiration or awe.

ى ه و د see further under ه و د [2]
يهودى *yahuudi* /pl *yahuud*/ **1** /adj/ Jewish. **2** /n/ a Jew. *ʕaflas min il-yahuudi f-yoom is-sabt [prov]* more broke than a Jew on the Sabbath. ‖*yahuudi (ʕibn*[i] *yahuudi)* a miser. - *ʕil-yahuudi lamma yfallis yifattif fi-dafatr-u l-ʠadiima [prov]* (when a Jew goes bankrupt he looks through his old ledgers) ≈ when a man goes bankrupt he'll imagine all sorts of debts owed to him. - *ʕitḫawagu lil-yahuudi - ʠaal il-yoom ʕiid-i [prov]* (they needed the Jew's help; he said 'Today is my feast day') ≈ he who is unwilling to help will always find a good excuse.
يهودية *yahudiyya* /n/ **1** Judaism. **2** simple variety of backgammon.

ى و ج ا
يوجا *yuuga, yooga* <Engl> /n/ yoga.
يوجى *yuugi, yoogi* <Engl> /n pl *-yya*/ yogi, teacher of yoga, expert in yoga.

ى و د
يود *yuud* /n/ iodine. *sabγit yuud* tincture of iodine.

ى و ر see ى ا و ر : *yaawir, yawraan*

ى و س ف
يوسف أفندى *yuusif ʕafandi* <prop n> /coll n/ tangerine(s). -also *yustafandi, yusafandi, yusfi, safandi, ʕistafandi.*
يوسف أفنديّاية *yuusif ʕafandiyyaaya* /unit n, pl *-aat*/ a tangerine. -also *yusafandiyyaaya, safandiyyaaya, ʕistafandiyyaaya.*

ى و م
يوم *yoom* /n pl *ʕayyaam*/ **1** day. *kull*[i] *yoom* every day. *ʕaʃart iyyaam* ten days. *ʠabl*[a] *ʕaaxir iʃ-ʃahr*[i] *b-yomeen* two days before the end of the month. *ṭabaʠ il-yoom* the dish of the day. *yoom it-talaat* Tuesday. *yoom il-ḫisaab* Judgement Day. ‖*yoom ʕasal wi-yoom baṣal [prov]* there are good days and bad days. - *ʕibn*[i] *yomeen ma-yʕiʃ-ʃ*[i] *talaata [prov]* ≈ no man can exceed his allotted life span. - *hiyya ʕala yom-ha w-lelit-ha* she's about to give birth. - *fi-yoom min il-ʕayyaam* (1) one day, one of these days. (2) once upon a time. - *yom-ha* and *yomii-ha* at that time, the same day. - *min yom-ha* and *min yomii-ha* since that day, from that day on, as in *gidd-i ṭiliʕ fi-qurʕit il-ḫigg*[i] *w-min yom-ha l-beet zayy*[i] *xaliyyit in-naḫl* my grandfather's name came up to go on pilgrimage and from that day on the house has been like a beehive! - *min yoom-* ≈ from the start, as in *ʕana kida min yoom-i* I've been like this since the day I was born, *min yoom-i w-ʕana naḫs* I've been unlucky all my life. - *ʕil-yomeen dool* or *ʕil-ʕayyaam di* these days, nowadays. - *zayy il-yomeen dool* at about this time last year. - *yoom-u b-ʕafara* he's very slow. **2** appointed time. *kull*[i] *waaḫid liih yoom [prov]* ≈ every dog has its day. *rabb-i-na yigʕal yoom-i ʠabl*[i] *yoom-ak* may my time of death be before yours. — *ʕayyaam* /pl n/ **3** (particular) period of time. *ʕayyaam il-faraʕna* (in) the days of the Pharaohs. *ʕayyaam id-diraasa* school days. *ʕayyaam zamaan* (in) the old days, the past. ‖ *ʕayyam-ha* at that time, in those days, as in *kaan ʕayyam-ha sinn-u ʕaʠall*[i] *min ʕifriin sana* at that time he was less than twenty years old.
¶ *yoom ma* /conj/ (on) the day when. *yoom ma-ʃtaret-ha*

(on) the day when I bought it. *huwwa qaarif malḫit-na min yoom ma rafaḍna ʕibn-u* he's had it in for us since the day we refused his son (in marriage). - *ʕayyaam ma* /conj/ (in) the days when. *ʕayyaam ma kaan fii niẓaam* (in) the days when things were run properly. *ʕayyaam ma kaan ig-gineeh gineeh* in the good old days (when a pound was a pound).

يومى *yoomi* **1** /adj/ daily. *birnaamig yoomi* daily schedule. *gariida yomiyya* daily newspaper. **2** /adv/ every day. *da b-yiigi hina yoomi* he comes here every day. ¶ *yomiyyan, yawmiyyan* /adv/ daily.

يوميّة *yomiyya* /n pl *-aat*/ **1** daily pay rate, daily wage. *bi-yiftaɤal bil-yomiyya* he works on a daily rate. **2a** day's labour. *baɛd^{i} yomiyyit-i ruḫt^{i} lil-mudiir* after my day's work I went to (see) the director. **3** (also *daftar il-yomiyya*) *[admin]* daybook. **4** /only in constr/ the day of. *min yomiyyit il-ḫadsa* since the day of the accident.

يوميّات *yawmiyyaatˆ* /pl n/ diaries.

يوماتى *yomaati* /adv/ daily. *yomaati b-aqabl-u hnaak* every day I meet him there.

مياومة *miyawma* **1** /adv/ on a daily basis. *ʕittafaq ʕinnu yiftaɤal-li myawma* he agreed that he would work for me by the day. **2** /n/ work on a daily basis. *bi-yiftaɤalu bil-miyawma* they work by the day.

ی و ه

يوه *yooh, yuuh* exclamation indicating exasperation. *yooh ʕinta lissa gaay* and here you come after all this time! *yooh da-na nsiit* oh rats, I forgot! ‖*yooh gat-ak ʕeeh* expression of delight (in joking).

ی و ی و

يويو *yuuyu* <Engl> /n pl *yuyaat*/ yo-yo.

ی ی ه

ييه *yeeh* /n pl *-aat*/ twenty-eighth and last letter of the Arabic alphabet. - also *yaa, yaaʕ, yih*.

ILLUSTRATIONS

LIST OF PLATES

Plate A :	Vessels	971
Plate B :	Implements and Containers	972
Plate C :	Rural Items	973
Plate D :	Agricultural Implements	974
Plate E :	Irrigation and Cultivation	975
Plate F :	Apparel	976
Plate G :	*Mafrafiyya* work	977
Plate H :	*Xiyamiyya* work	978
Plate H :	*Xiyamiyya* work	979
Plate I :	Pipes	980
Plate J :	Musical Instruments	981

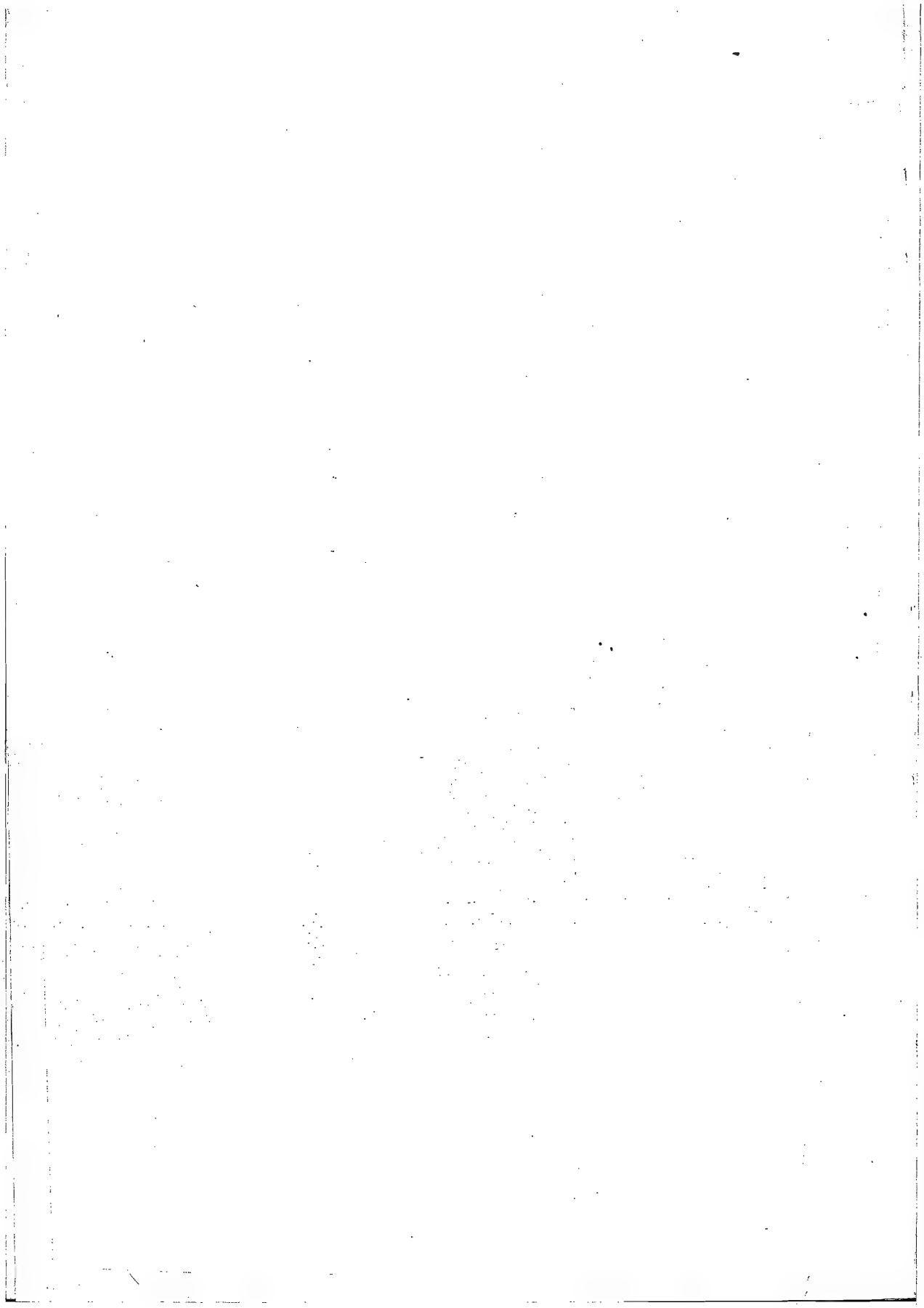

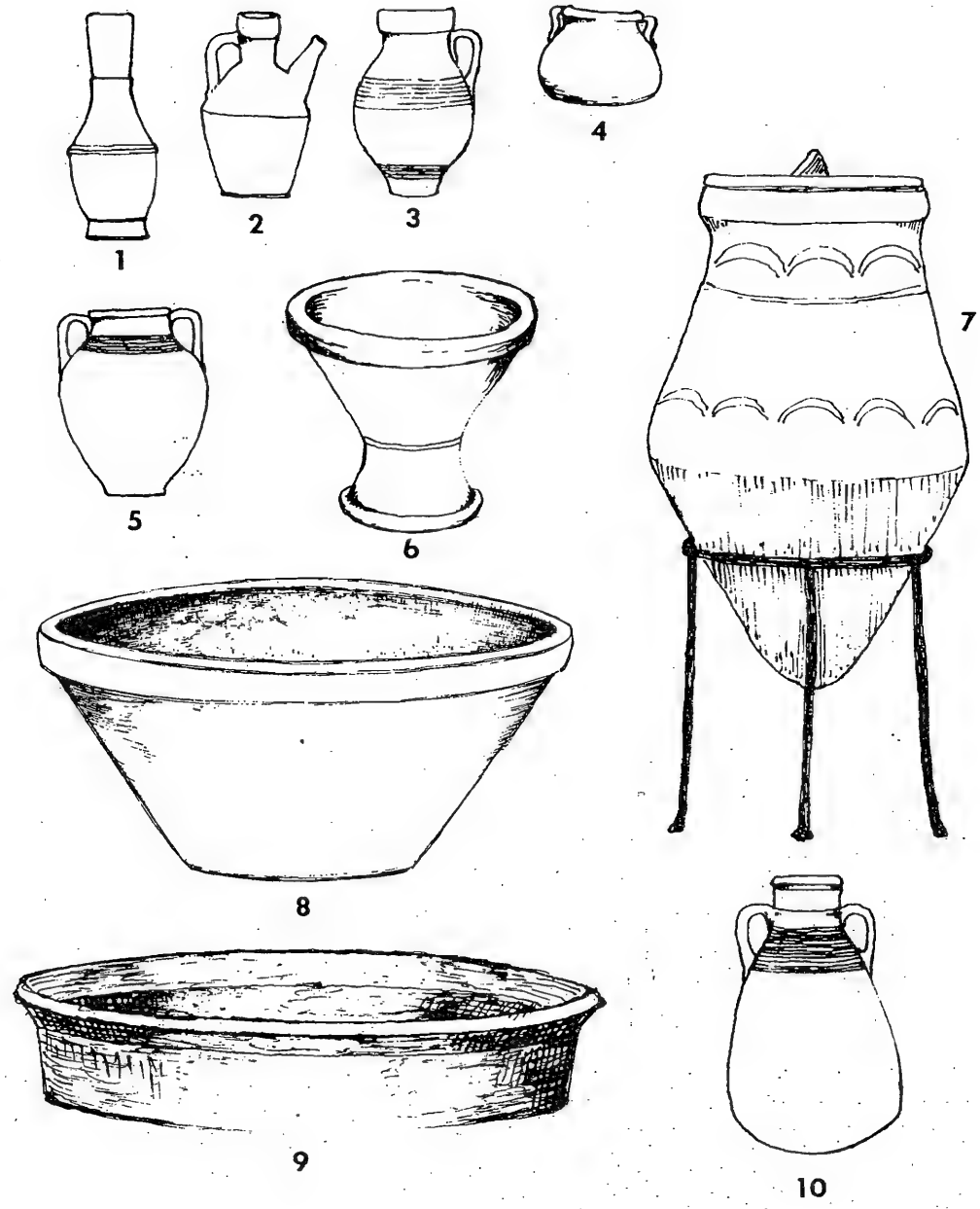

1 *ɋulla*
2 *ʃabriiɋ*
3 *maɦlaba*
4 *burma*
5 *ɋidra*
6 *manɋad, mawɋad*
7 *ziir*
8 *maguur*
9 *ʈiʃt*
10 *ballaaʂ, ballaaʂi, garra, zalɛa*

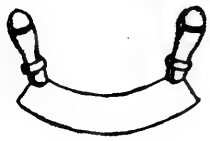

1

2

3

4

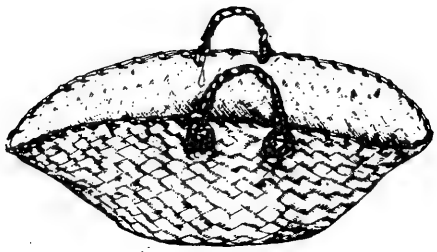

5

6

7

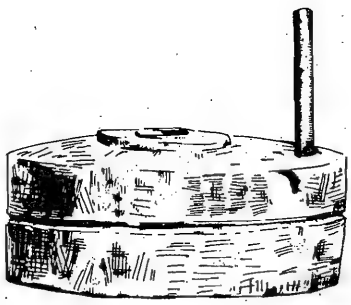

8

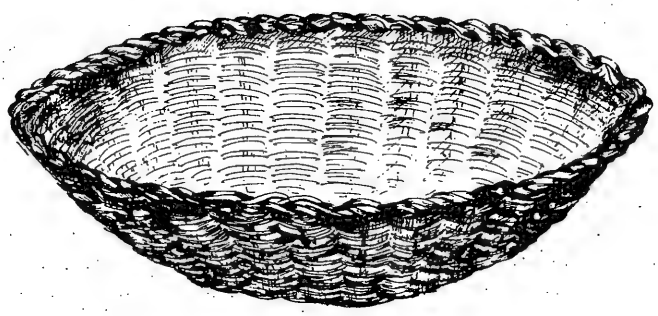

9

1 *maxraṭa*
2 *lamba ṣafiiḥ, lamba ʃawwaaṭi, lamba saruux, lamba b-simbila*
3 *kanaka*
4 *maṭraḥa*
5 *ɣalaq*
6 *mufraak*
7 *maqṭaf*
8 *raḥaaya*
9 *miʃanna*

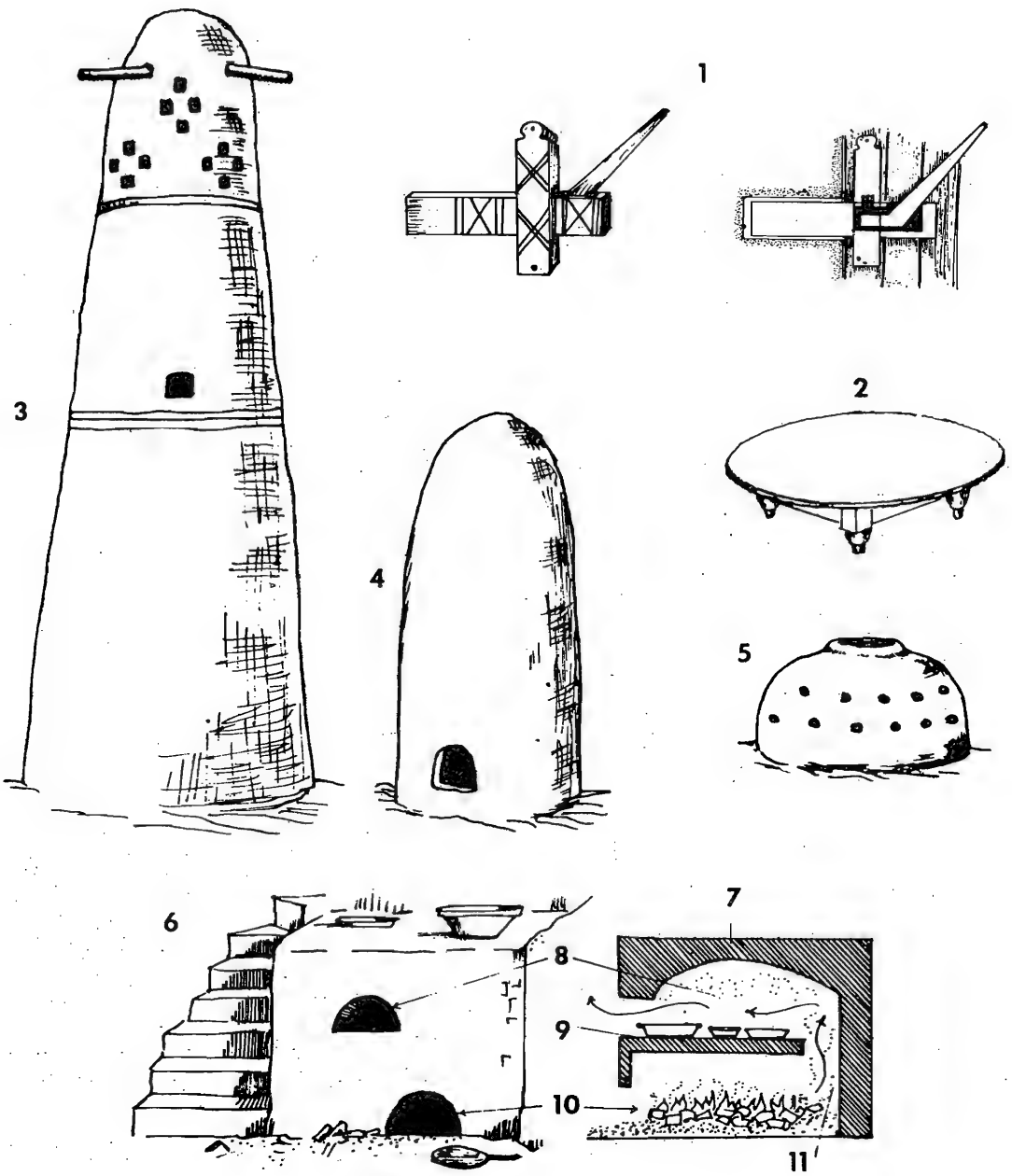

1 *ḍabba*
2 *ṭabliyya*
3 *burgʲ ḥamaam*
4 *ṣumáʕa, maxzan ʏalla*
5 *xumm, xunn, ṣumáʕa*
6 *furn*
7 *ɋubba*
8 *ʕarṣa*
9 *balaaṭa, ʕarṣa*
10 *miḥma*
11 *ʃaruuɋa*

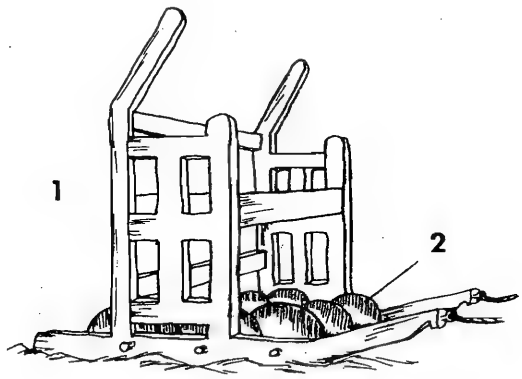

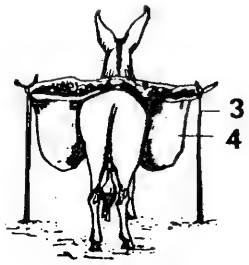

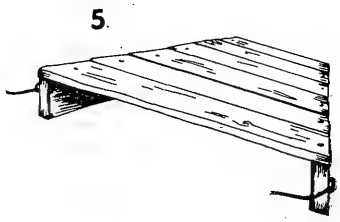

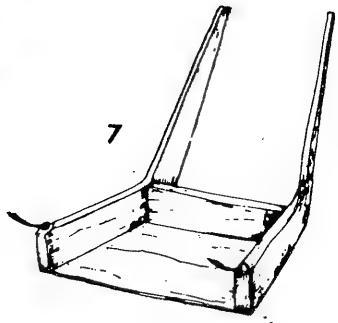

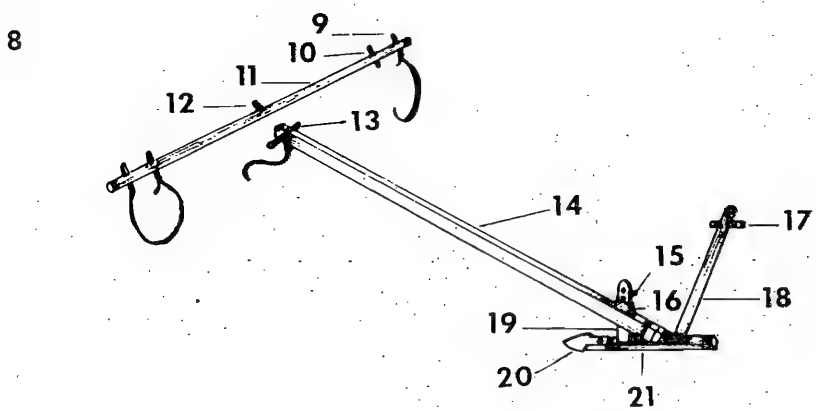

1 *noorag*
2 *falaka*
3 *fiʿba*
4 *ʿabiiʿ*
5 *battaana*
6 *faas*
7 *qaṣṣabiyya*
8 *miḥraat*
9 *difiida, ɢunnaafa*
10 *ɛaṣfuura*
11 *naaf*
12 *faahid, ɛaṣfuura*
13 *ɢantuut, bantuut, lantuut*
14 *ɢoos*
15 *ɛaɢrab*
16 *ḍufdaɛa*
17 *ɢabḍa*
18 *rumḥ*
19 *balanga*
20 *silaaḥ*
21 *basxa, baṣxa*

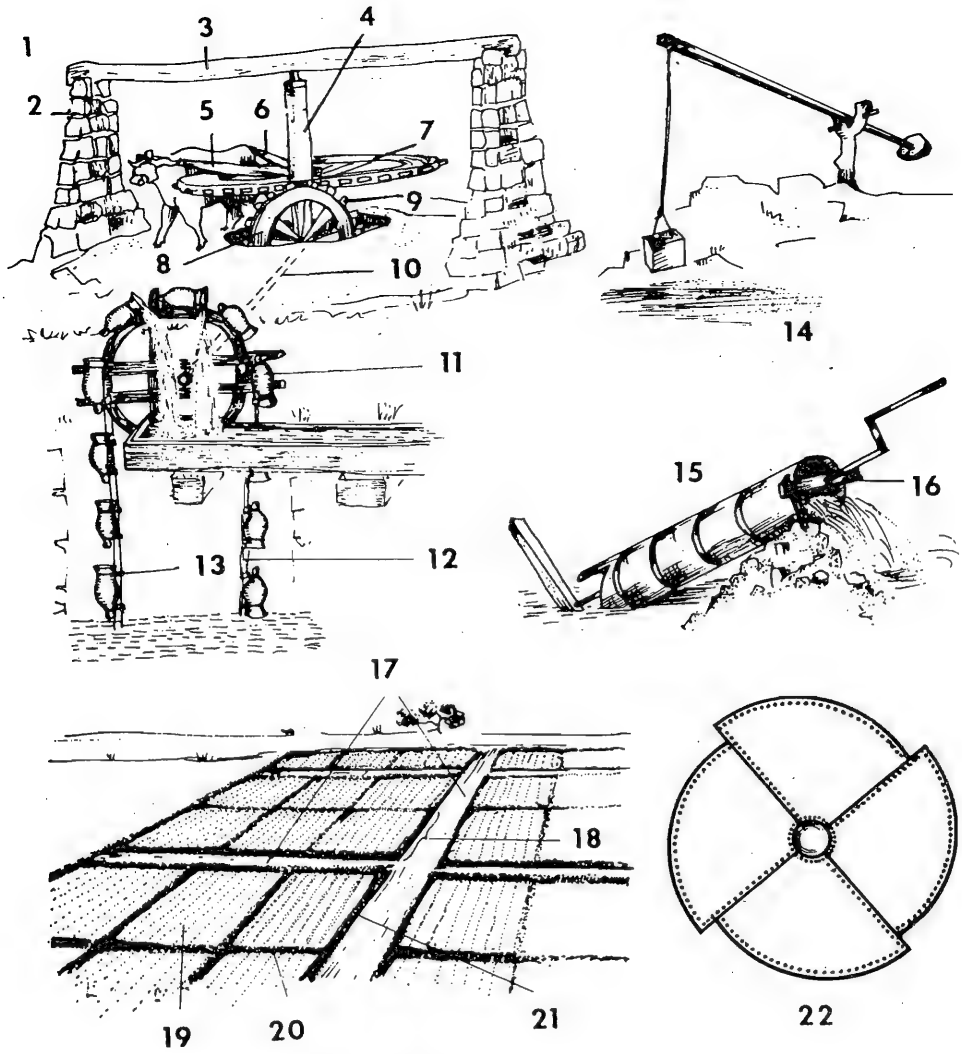

1 *saqya*
2 *ṣaduud*
3 *gazya*
4 *dabbuus, ɛaruuṣa, harmiis*
5 *naaf*
6 *hudya*
7 *kibiir*
8 *ṣaʏiir*
9 *ḍirs*
10 *sahm*
11 *ɋaduus*
12 *tuunis, ʈuunis*
13 *kilaala*
14 *faduuf*
15 *baddaala, ɦalazoona, ʈambuur*
16 *warf*
17 *misɋa, ɛabbaara, ɛabbuura, faɦl, ɋanaaya*
18 *farda*
19 *beet*
20 *bitn, bitniyya, riwaal*
21 *riifa*
22 *tabuut, ɦalazoona, ɦalluufa, ʈambuur, ʈambuufa*

1 *ṭaqiyya*
2 *tarfiiḥa, talfiiḥa, talfiiʿa*
3 *sideeri*
4 *bafliik*
5 *gallabiyya baladi*
6 *bulva*
7 *qaṣabit burqu'ʿ*
8 *burquʿ*
9 *tarbiiʿa, mandiil raas*
10 *ṭarḥa*
11 *gallabiyya samra*
12 *ʿimma*
13 *ṭarbuuf*
14 *faal*
15 *kakuula*
16 *quftaan*
17 *milaaya*
18 *ʿabaaya*
19 *qubqaab*
20 *kirdaan*

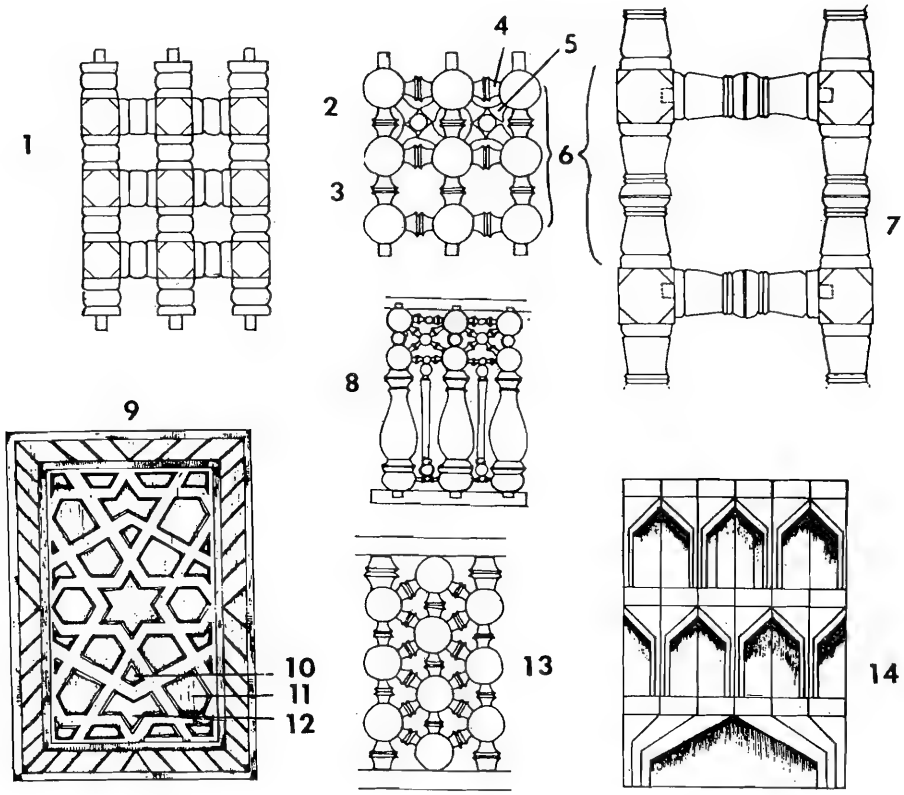

1 *ʂahriigi dayyaq*
2 *ʂaliib malyaan*
3 *ʂaliib faaḍi*
4 *farx*
5 *ɢambuuɛa*
6 *mixarraz*
7 *ʂahriigi waasiɛ*
8 *kanaysi*
9 *ħafwⁱ baladi*
10 *sarwa*
11 *kinga*
12 *nuʂʂⁱ nigma*
13 *maymuuni misaddis*
14 *miɢarnas*

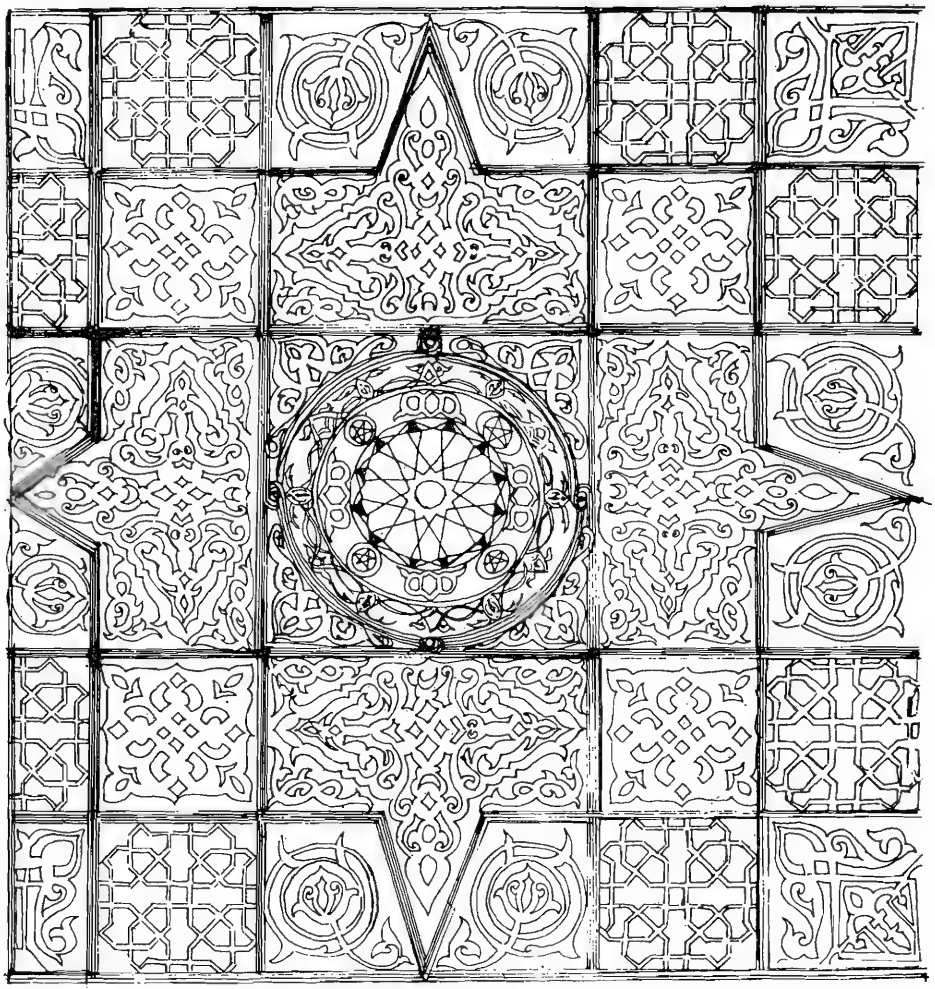

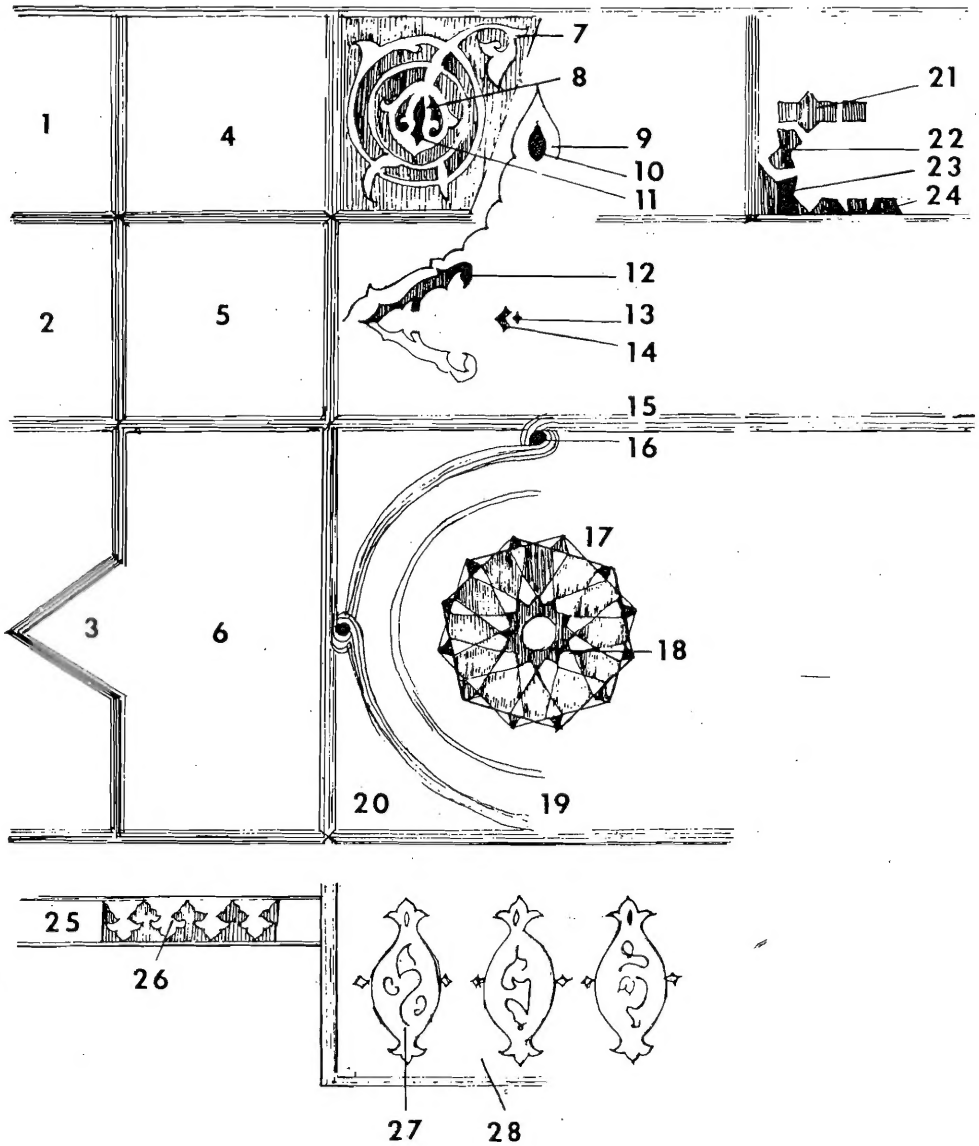

1 *rubɛ*
2 *nuṣṣ*
3 *sinn*
4 *tarbiiɛa*
5 *buqqa*
6 *ḥood*
7 *ḍufr*
8 *zahra*
9 *looza salt*
10 *balaḥa*
11 *famɛa*
12 *raas tiɛbaan*
13 *buqqa*
14 *libaas*
15 *qadda*
16 *nuqṭa*
17 *ṭabaq baladi*
18 *xaatim*
19 *rank*
20 *kaɛb*
21 *luqma*
22 *maxnuuqa*
23 *rukn*
24 *kursi*
25 *farafa*
26 *zahra kaff is-sabɛ*
27 *turunga*
28 *talbiisa*

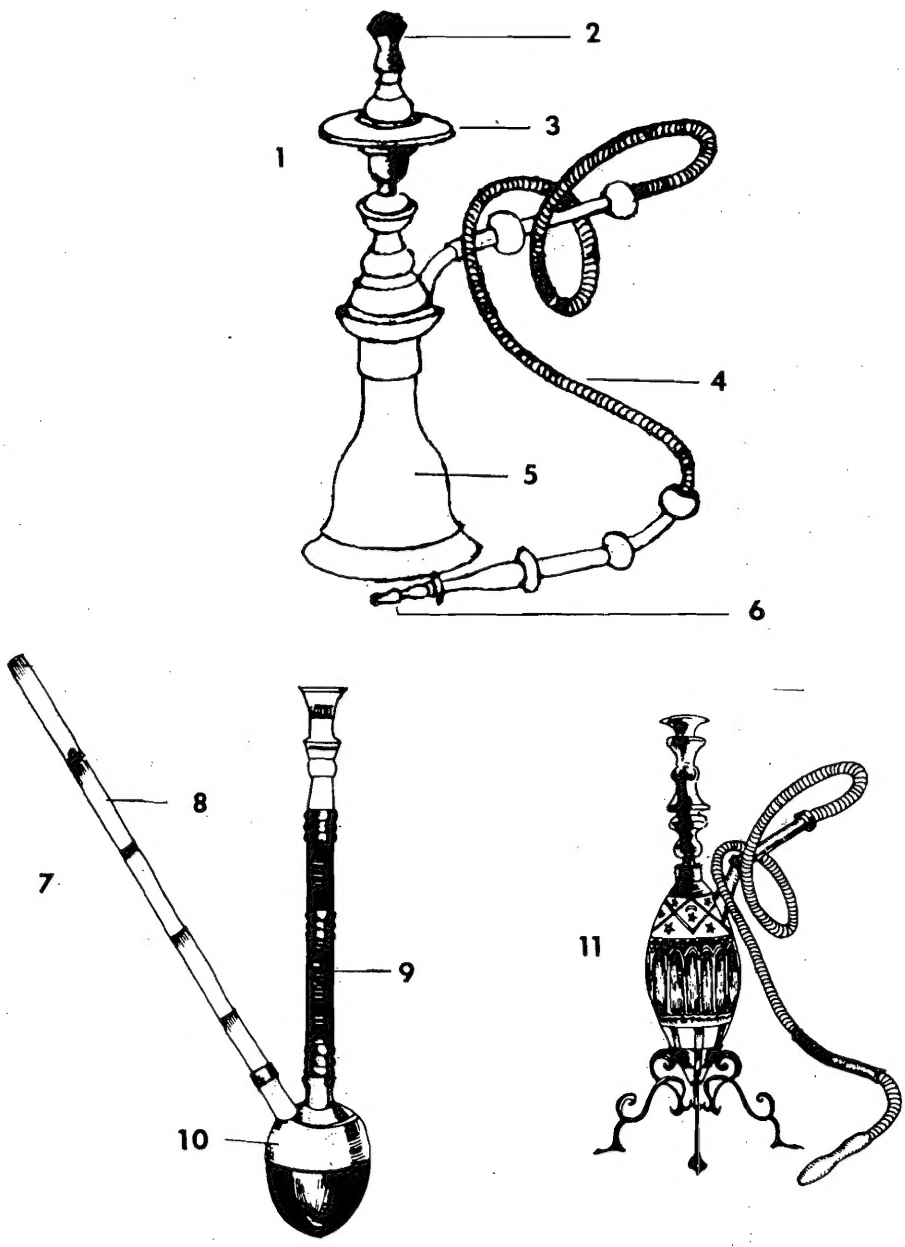

1 *ʃiiʃa*
2 *ɧagar*
3 *ʈaasa*
4 *layy*
5 *bannuura, dooraq*
6 *mabsam, fumm*
7 *gooza*
8 *buuṣa, ʏaaba*
9 *qalb*
10 *bukʃa*
11 *buuri*

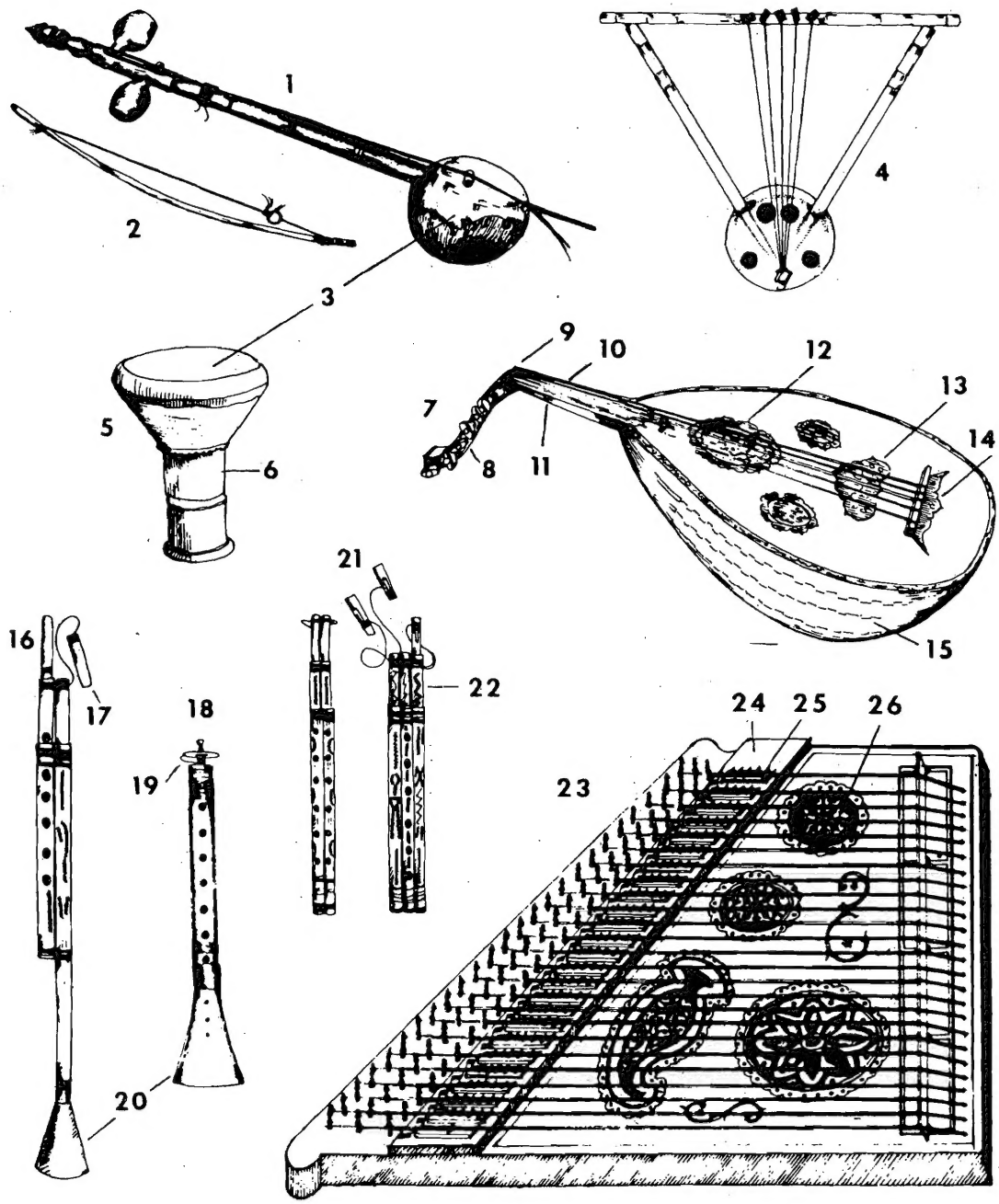

1 *rabaaba*
2 *ɢoos*
3 *raɢma*
4 *simsimiyya*
5 *ṭabla*
6 *ḥuɢɢ*
7 *ɛuud*
8 *bangaɢ*
9 *ʃinf*
10 *miraaya*
11 *raɢaba*
12 *ʃamsiyya*
13 *raɢma*
14 *farasa*
15 *ɢaṣ9a*
16 *ʃarʏuul*
17 *mabsam, ḅaluuṣ*
18 *muzmaar baladi*
19 *mabsam*
20 *ḅuuɢ*
21 *muzmaar turki*
22 *rakiiza*
23 *ɢanuun*
24 *masṭara*
25 *ɛarba*
26 *ʃamsiyya*

محمد مصطفى الجاروشة